UNITED STATES DEPARTMENT OF ENERGY/ WESTINGHOUSE SAVANNAH RIVER COMPANY

SAVANNAH RIVER SITE
AIKEN, SOUTH CAROLINA

AS-BUILT CONSTRUCTION PERMIT APPLICATION

FOR AN

INDUSTRIAL WASTEWATER TREATMENT FACILITY

FOR THE

F AND H-AREA HIGH-LEVEL RADIOACTIVE WASTE TANK FARMS (U)

Prepared by

Westinghouse Savannah River Company
Savannah River Site
Aiken, South Carolina

and

Chas. T. Main, Inc.
Charlotte, North Carolina

April, 1991

SOUTH CAROLINA
DEPT OF HEALTH AND ENVIRONMENTAL CONTROL
INDUSTRIAL WASTEWATER DIVISION
APPROVED - FOR CONSTRUCTION ONLY

DHEC PERMIT # 17424 IW

DATE ISSUED: 1-25-93

BY: Marion F. Sadler, Jr.

JUL 1 [illegible] 1991

S. C. [illegible] Environmental Control [illegible] Agriculture
Wastewater Division

F AND H-AREA HLW TANK FARM
INDUSTRIAL WASTEWATER PERMIT

TABLE OF CONTENTS

SECTION NUMBER AND TITLE	PAGE
1.0 PERMIT APPLICATION FORM	1
1.1 Scope of Permit Application	2
1.2 Effluent and Treated By-Product Wastes	6
1.3 Facility Contacts and Certification	6
1.4 Professional Engineer Certification	7
1.5 Permit Modifications	8
1.6 Assessment and Inspections	9
2.0 FACILITY LOCATION	15
2.1 F-Area HLW Tank Farm	15
2.2 H-Area HLW Tank Farm	15
2.3 Interarea Transfer Lines	23
3.0 PROCESSING OF SRS RADIOACTIVE WASTEWATERS	29
3.1 F and H-Area HLW Tank Farms	32
3.2 F/H Effluent Treatment Facility	33
3.3 Tank 50/Z-Area Saltstone Manufacturing and Disposal Facility	33
3.4 DWPF Vitrification Facility	33
3.5 Consolidated Incineration Facility	34
4.0 F and H-AREA HLW TANK FARM DESCRIPTION	35
4.1 General Process Description	35
4.2 Normal Operations	42
4.3 Waste Receipt and Initial Aging	45

TABLE OF CONTENTS

SECTION NUMBER AND TITLE			PAGE
4.3.1	High-Heat Waste		46
4.3.2	Low-Heat Waste		47
4.4	Wastewater Evaporation		48
4.4.1	Evaporator Overheads Process Flow		52
4.4.2	Waste Concentrate Process Flow		55
4.4.3	Process Equipment Descriptions		60
	4.4.3.1	Existing Evaporator Systems	60
	4.4.3.2	Replacement Evaporator System	74
	4.4.3.3	Spare Evaporator Systems	79
4.5	Salt Cake Processing		80
4.5.1	Process Flow		81
	4.5.1.1	Salt Cake Aging	83
	4.5.1.2	Salt Cake Removal/Blending	84
	4.5.1.3	Precipitate Reaction Step	88
	4.5.1.4	Precipitate Concentration Step	90
	4.5.1.5	Precipitate Slurry Washing Step	97
	4.5.1.6	Washed Precipitate Slurry Transfer Step	99
4.5.2	ITP Start-up Testing		101
	4.5.2.1	Water Runs	102
	4.5.2.2	Chemical Runs	105
4.5.3	In-Tank Precipitation Process Equipment		108

F AND H-AREA HLW TANK FARM
INDUSTRIAL WASTEWATER PERMIT

TABLE OF CONTENTS

SECTION NUMBER AND TITLE	PAGE
4.6 Sludge Processing	112
4.6.1 Process Flow	113
4.6.1.1 Sludge Removal	114
4.6.1.2 Aluminum Dissolution (Optional)	117
4.6.1.3 Washing and Co-Washing	118
4.6.1.4 Washed Sludge Slurry Transfer	121
4.6.2 Process Equipment	122
4.7 Waste Tanks	123
4.7.1 Type I Waste Tanks	133
4.7.2 Type II Waste Tanks	136
4.7.3 Type III and IIIA Waste Tanks	139
4.7.4 Type IV Waste Tanks	142
4.8 Waste Transfer Operations	145
4.8.1 Waste Transfer Lines	149
4.8.2 Diversion Boxes	166
4.8.3 Valve Boxes	168
4.8.4 Transfer Pumps	187
4.8.5 F/H Interarea Transfer Line	191
4.8.6 H/S Interarea Transfer Line	199
4.9 Backup Power Provisions	203

TABLE OF CONTENTS

SECTION NUMBER AND TITLE	PAGE
5.0 WASTE CHARACTERISTICS	205
5.1 Influent Waste Characterization	206
5.1.1 F and H-Area Separations Facilities High-Heat Wastes	207
5.1.2 F and H-Area Separations Facilities Low-Heat Wastes	208
5.1.3 Receiving Basin for Offsite Fuel Waste and Resin Regeneration Facility Waste	211
5.1.4 SRL Laboratory Waste	214
5.1.5 Reactor Filter Backwash	216
5.1.6 Building 299-H Decontamination Solution	218
5.1.7 DWPF Vitrification Facility Treated Aqueous Recycle	218
5.1.8 Incidental Wastes	223
5.1.9 Process Chemicals	225
5.2 Effluent and Treated By-product Waste Characterization	226
5.2.1 Evaporator Overheads	228
5.2.2 Treated RBOF/RRF Waste	230
5.2.3 Washed Precipitate Slurry	230
5.2.4 Decontaminated Salt Solution	231
5.2.5 Washed Sludge Slurry	233
6.0 CALCULATIONS	237
6.1 Transfer Pump Calculations	237
6.2 Waste Tank Capacity Calculations	238

TABLE OF CONTENTS

SECTION NUMBER AND TITLE	PAGE
7.0 SPECIFICATION SUMMARIES	239
7.1 Evaporator Systems	239
7.1.1 Existing Evaporator Systems	239
7.1.2 Replacement Evaporator System	272
7.1.3 New Spare Evaporator Pot	273
7.2 In-Tank Precipitation	273
7.3 Sludge Processing	276
7.4 Waste Tanks	281
7.4.1 Type I Waste Tanks	281
7.4.2 Type II Waste Tanks	303
7.4.3 Type III and IIIA Waste Tanks	311
7.4.4 Type IV Waste Tanks	347
7.5 Process Piping	361
7.6 Pumps	366
7.6.1 Dedicated Service Transfer Pumps	367
7.6.1.1 Evaporator Systems	367
7.6.1.2 ITP Filtration	372
7.6.2 General Service Transfer Pumps	373
7.6.2.1 Pump Pits	374
7.6.2.2 Waste Tank Transfer Pumps	374
7.6.3 Slurry Pumps	381
7.7 Pump Pit Tanks	385
8.0 REFERENCES	389

F AND H-AREA HLW TANK FARM
INDUSTRIAL WASTEWATER PERMIT

LIST OF FIGURES

Independent Verification

The information used to prepare the figures contained within this permit application was provided by the Westinghouse Savannah River Company. This information included design drawings, operational diagrams, and review comments. This information was reviewed under my direction/supervision and the pertinent information was used to develop the figures contained in this permit application. Based upon the information provided to me by the Westinghouse Savannah River Company, I certify that, to the best of my knowledge, information, and belief, these figures accurately represent the current conditions at the F and H-Area HLW Tank Farms.

Richard L. Stegen
Registered Professional Engineer

S.C. Registration No. 12633

SOUTH CAROLINA REGISTERED PROFESSIONAL ENGINEER No. 12633 RICHARD L. STEGEN

FIGURE NUMBER AND TITLE		PAGE
2-1	Site Map	16
2-2	Location Map	17
2-3	Topographical Map - F/H Interarea Transfer Line	18
2-4	Topographical Map - F-Area HLW Tank Farms	19
2-5	Topographical Map - H-Area HLW Tank Farms	20
2-6	F-Area HLW Tank Farm Waste Processing Equipment	21
2-7	H-Area HLW Tank Farm Waste Processing Equipment	24
3-1	Integrated HLW Management Flow Diagram	31
4-1	Overall Flow Diagram for the HLW Tank Farms	37
4-2	Existing Evaporator Systems - Process Flow Diagram	50
4-3	Replacement HHW Evaporator System (242-25H) - Process Flow Diagram	51

LIST OF FIGURES

4-4	Waste Concentrate - Process Flow Diagram	57
4-5	Typical Evaporator Vessel	62
4-6	Typical Overheads Condenser - Evaporator System 242-16F/H	64
4-7	Typical Mercury Removal Tank	66
4-8	Typical CRC Pump Tank	67
4-9	Typical Cesium Removal Column	69
4-10	Typical Overheads Tank	70
4-11A	Typical Waste Concentrate Pump Tank	72
4-11B	Typical Waste Concentrate Pump Tank - Top View	73
4-12	Salt Cake Processing - Process Flow Diagram	82
4-13	ITP Process Flow Diagram - Precipitation Reaction Step	89
4-14	ITP Filter Assembly	92
4-15	Decontaminated Salt Solution Filtrate Stripper Column	95
4-16	ITP Filtrate Hold Tank	96
4-17	ITP Process Flow Diagram - Precipitate Washing Step	98
4-18	Spent Wash Water Stripper Column	100
4-19	Sludge Processing Flow Diagram	115
4-20	Typical Type I Waste Tank	135
4-21	Typical Type II Waste Tank	138
4-22	Typical Type III/IIIA Waste Tank	141
4-23	Typical Type IV Waste Tank	144

LIST OF FIGURES

4-24	F-Area HLW Tank Farm - Waste Transfer System	146
4-25	H-Area HLW Tank Farm - Waste Transfer System	147
4-26	Waste Transfer Line/Secondary Containment - Type I	152
4-27	Waste Transfer Line/Secondary Containment - Type II & IIA	153
4-28	Waste Transfer Line/Secondary Containment - Type III & IIIA	164
4-29	Typical Jumper Connection	167
4-30	Diversion Box FDB1 Layout	170
4-31	Diversion Box FDB2 Layout	171
4-32	Diversion Box FDB3 Layout	172
4-33	Diversion Box FDB4 Layout	173
4-34	Diversion Box FDB5 Layout	174
4-35	Diversion Box FDB6 Layout	175
4-36	Diversion Box HDB1 Layout	176
4-37	Diversion Box HDB2 Layout	177
4-38	Diversion Box HDB3 Layout	178
4-39	Diversion Box HDB4 Layout	179
4-40	Diversion Box HDB5 Layout	180
4-41	Diversion Box HDB6 Layout	181
4-42	Diversion Box HDB7 Layout	182
4-43	Diversion Box HDB8 Layout	183
4-44	Typical Valve Box Arrangement	186

LIST OF FIGURES

4-45	Pump Pit HPP5 and HPP6 Layout	190
4-46	LPPP and APP Layout	192
4-47	Typical Pump Pit Section	193
4-48	F/H Interarea Transfer Line	196
4-49	F/H Interarea Transfer Line Sections	198
4-50	H/S Interarea Transfer Line - Flow Diagram	200
4-51	H/S Interarea Transfer Line-Typical Section	201
7-1	Typical Design Features - Type I Waste Tanks	282
7-2	Primary Waste Tank Ventilation System (Type I)	298
7-3	Primary Waste Tank Ventilation System (Type I & II)	299
7-4	Typical Design Features - Type II Waste Tanks	305
7-5	Typical Design Features - Type III and IIIA Waste Tanks	312
7-6	Primary Waste Tank Ventilation System (Type III/IIIA)	345
7-7	Typical Design Features - Type IV Waste Tanks	349
7-8	Primary Waste Tank Ventilation System (Type IV)	359
7-9	Typical Telescoping Transfer Pump	379
7-10	Typical Telescoping Jet Pump	382
7-11	Typical Telescoping Jet Pump (Flexible Hose)	383
7-12	Typical Long-Shaft Slurry Pump	387

LIST OF TABLES

TABLE NUMBER AND TITLE		PAGE
2-1	F-Area HLW Tank Farm Equipment List	22
2-2	H-Area HLW Tank Farm Equipment List	25
2-3	Interarea Transfer Lines - Waste Handling Equipment List	28
4-1	Minimum Predicted Transfer/Refill Cycles to Empty a Full Salt Cake Tank	85
4-2	In-Tank Precipitation Reaction Summary	91
4-3	Waste Tank Data	126
4-4	Waste Tank Usage	128
4-5	Type I Waste Tanks - Summary Design Description	134
4-6	Type II Waste Tanks - Summary Design Description	137
4-7	Type III and IIIA Waste Tanks - Summary Design Description	140
4-8	Type IV Waste Tanks - Summary Design Description	143
4-9	F-Area Process Lines	154
4-10	H-Area Process Lines	157
4-11	IAL Process Lines	162
4-12	Diversion Box Summary	169
4-13	Tank Farm Pump Pit Information	194
5-1	F-Area Facility High-Heat Typical Waste Characterization	209
5-2	H-Area Facility High Heat Typical Waste Characterization	210
5-3	F-Area Facility Low-Heat Typical Waste Characterization	212
5-4	H-Area Facility Low-Heat Typical Waste Characterization	213

LIST OF TABLES

TABLE NUMBER AND TITLE		PAGE
5-5	Receiving Basin for Offsite Fuel and Resin Regeneration Facility Waste Characterization	215
5-6	SRL Laboratory Typical Waste Characterization	217
5-7	Reactor Filter Backwash Waste Characterization	219
5-8	Building 299-H Decontamination Typical Solution Waste Characterization	220
5-9	DWPF Vitrification Facility Treated Aqueous Recycle Typical Waste Characterization	221
5-10	Generation Rates	227
5-11	Evaporator Overheads Typical Waste Characterization	229
5-12	Washed Precipitate Slurry Waste Characterization	232
5-13	Decontaminated Salt Solution Typical Waste Characterization	234
5-14	Washed Sludge Slurry Waste Typical Characterization	236
7-1	Evaporator Pot Specifications (242-F Evaporator System)	241
7-2	Overheads Condenser Specifications (242-F Evaporator System)	242
7-3	Mercury Removal Tank Specifications (242-F Evaporator System)	243
7-4	CRC Pump Tank Specifications (242-F Evaporator System)	244
7-5	Cesium Removal Column Specifications (242-F Evaporator System)	245
7-6	Overheads Hold Tank Specifications (242-F Evaporator System)	246
7-7	CTS Pump Tank Specifications (242-F Evaporator System)	247
7-8	Evaporator Pot Specifications (242-H Evaporator System)	248
7-9	Overheads Condenser Specifications (242-H Evaporator System)	249
7-10	Mercury Removal Tank Specifications (242-H Evaporator System)	250

LIST OF TABLES

TABLE NUMBER AND TITLE		PAGE
7-11	CRC Pump Tank Specifications (242-H Evaporator System)	251
7-12	Cesium Removal Column Specifications (242-H Evaporator System)	252
7-13	Overheads Hold Tank Specifications (242-H Evaporator System)	253
7-14	CTS Pump Tank Specifications (242-H Evaporator System)	254
7-15	Evaporator Pot Specifications (242-16F Evaporator System)	255
7-16	Overheads Condenser Specifications (242-16F Evaporator System)	256
7-17	Mercury Removal Tank Specifications (242-16F Evaporator System)	257
7-18	CRC Pump Tank Specifications (242-16F Evaporator System)	258
7-19	Cesium Removal Column Specifications (242-16F Evaporator System)	259
7-20	Overheads Hold Tank Specifications (242-16F Evaporator System)	260
7-21	Evaporator Pot Specifications (242-16H Evaporator System)	261
7-22	Overheads Condenser Specifications (242-16H Evaporator System)	262
7-23	Mercury Removal Tank Specifications (242-16H Evaporator System)	263
7-24	CRC Pump Tank Specifications (242-16H Evaporator System)	264
7-25	Cesium Removal Column Specifications (242-16H Evaporator System)	265
7-26	Overhead Hold Tank Specifications (242-16H Evaporator System)	266
7-27	Spare Evaporator Pot Specifications (Existing Evaporator Systems)	267
7-28	Evaporator Pot Specifications (242-25H Evaporator System)	268
7-29	Overheads Condenser Specifications (242-25H Evaporator System)	269
7-30	Mercury Removal Tank Specifications (242-25H Evaporator System)	270

LIST OF TABLES

TABLE NUMBER AND TITLE		PAGE
7-31	Overheads Hold Tank Specifications (242-25H Evaporator System)	271
7-32	New Spare Evaporator Pot Specifications	274
7-33	Typical Cross Flow Filter Specifications	277
7-34	Stripper Column Specifications - Decontaminated Salt Solution Filtrate	278
7-35	Stripper Column Specifications - Wash Water Filtrate	279
7-36	Typical Filtrate Hold Tank Specifications	280
7-37	Tank 1 (Type I) Specifications	284
7-38	Tank 2 (Type I) Specifications	285
7-39	Tank 3 (Type I) Specifications	286
7-40	Tank 4 (Type I) Specifications	287
7-41	Tank 5 (Type I) Specifications	288
7-42	Tank 6 (Type I) Specifications	289
7-43	Tank 7 (Type I) Specifications	290
7-44	Tank 8 (Type I) Specifications	291
7-45	Tank 9 (Type I) Specifications	292
7-46	Tank 10 (Type I) Specifications	293
7-47	Tank 11 (Type I) Specifications	294
7-48	Tank 12 (Type I) Specifications	295
7-49	Tank 13 (Type II) Specifications	306
7-50	Tank 14 (Type II) Specifications	307

LIST OF TABLES

TABLE NUMBER AND TITLE		PAGE
7-51	Tank 15 (Type II) Specifications	308
7-52	Tank 25 (Type IIIA) Specifications	313
7-53	Tank 26 (Type IIIA) Specifications	314
7-54	Tank 27 (Type IIIA) Specifications	315
7-55	Tank 28 (Type IIIA) Specifications	316
7-56	Tank 29 (Type III) Specifications	317
7-57	Tank 30 (Type III) Specifications	318
7-58	Tank 31 (Type III) Specifications	319
7-59	Tank 32 (Type III) Specifications	320
7-60	Tank 33 (Type III) Specifications	321
7-61	Tank 34 (Type III) Specifications	322
7-62	Tank 35 (Type IIIA) Specifications	323
7-63	Tank 36 (Type IIIA) Specifications	324
7-64	Tank 37 (Type IIIA) Specifications	325
7-65	Tank 38 (Type IIIA) Specifications	326
7-66	Tank 39 (Type IIIA) Specifications	327
7-67	Tank 40 (Type IIIA) Specifications	328
7-68	Tank 41 (Type IIIA) Specifications	329
7-69	Tank 42 (Type IIIA) Specifications	330
7-70	Tank 43 (Type IIIA) Specifications	331
7-71	Tank 44 (Type IIIA) Specifications	332

LIST OF TABLES

TABLE NUMBER AND TITLE		PAGE
7-72	Tank 45 (Type IIIA) Specifications	333
7-73	Tank 46 (Type IIIA) Specifications	334
7-74	Tank 47 (Type IIIA) Specifications	335
7-75	Tank 48 (Type IIIA) Specifications	336
7-76	Tank 49 (Type IIIA) Specifications	337
7-77	Tank 51 (Type IIIA) Specifications	338
7-78	Stress-Corrosion Limits	340
7-79	Tank 17 (Type IV) Specifications	350
7-80	Tank 18 (Type IV) Specifications	351
7-81	Tank 19 (Type IV) Specifications	352
7-82	Tank 20 (Type IV) Specifications	353
7-83	Tank 21 (Type IV) Specifications	354
7-84	Tank 22 (Type IV) Specifications	355
7-85	Tank 23 (Type IV) Specifications	356
7-86	Tank 24 (Type IV) Specifications	357
7-87	Pump Pit Pump Specifications	375
7-88	Long-Shaft Transfer Pump Utilization	377
7-89	Typical Telescoping Transfer Pump Specifications	378
7-90	Typical Long-Shaft Slurry Pump Specifications	386
7-91	Typical Pump Pit Pump Tank Specifications	388

LIST OF ACRONYMS

ANSI	AMERICAN NATIONAL STANDARDS INSTITUTE
APP	AUXILIARY PUMP PIT
ASME	AMERICAN SOCIETY OF MECHANICAL ENGINEERS
ASTM	AMERICAN SOCIETY FOR TESTING AND MATERIALS
AWS	AMERICAN WELDING SOCIETY
BTU	BRITISH THERMAL UNIT
CIF	CONSOLIDATED INCINERATION FACILITY
CRC	CESIUM REMOVAL COLUMN
Cs	CESIUM
CTS	CONCENTRATE TRANSFER SYSTEM
DOE	DEPARTMENT OF ENERGY
DWPF	DEFENSE WASTE PROCESSING FACILITY
EPA	ENVIRONMENTAL PROTECTION AGENCY
ETF	EFFLUENT TREATMENT FACILITY
FDB	F AREA DIVERSION BOX
FFA	FEDERAL FACILITIES AGREEMENT
FPP	F AREA PUMP PIT
GPM	GALLONS PER MINUTE
HDB	H AREA DIVERSION BOX
HEME	HIGH EFFICIENCY MIST ELIMINATOR
HEPA	HIGH EFFICIENCY PARTICULATE AIR (FILTER)
HHW	HIGH-HEAT WASTE

LIST OF ACRONYMS

HLW	HIGH-LEVEL (RADIOACTIVE) WASTE
HP	HORSE POWER
HPP	H AREA PUMP PIT
HSWA	HAZARDOUS AND SOLID WASTE AMENDMENTS OF 1984
HVAC	HEATING, VENTILATION, AND AIR CONDITIONING
IAL	INTERAREA TRANSFER LINE
ITP	IN-TANK PRECIPITATION
LHW	LOW-HEAT WASTE
LPPP	LOW POINT PUMP PIT
NESHAPS	NATIONAL EMISSION STANDARDS FOR HAZARDOUS AIR POLLUTANTS
NPDES	NATIONAL POLLUTANT DISCHARGE ELIMINATION SYSTEM
OWST	ORGANIC WASTE STORAGE TANK
PSI	POUNDS PER SQUARE INCH
PSIG	POUNDS PER SQUARE INCH, GAUGE
Pu	PLUTONIUM
RBOF	RECEIVING BASIN FOR OFFSITE FUELS
RCRA	RESOURCE CONSERVATION AND RECOVERY ACT OF 1976
RFI	RCRA FACILITY INVESTIGATION
RPM	REVOLUTIONS PER MINUTE
RRF	RESIN REGENERATION FACILITY
Ru	RUTHENIUM

LIST OF ACRONYMS

SCDHEC	SOUTH CAROLINA DEPARTMENT OF HEALTH AND ENVIRONMENTAL CONTROL
SMDF	SALTSTONE MANUFACTURING AND DISPOSAL FACILITY
Sr	STRONTIUM
SRL	SAVANNAH RIVER LABORATORY
SRS	SAVANNAH RIVER SITE
STPB	SODIUM TETRAPHENYLBORATE
ST	SODIUM TITANATE
TDH	TOTAL DYNAMIC HEAD
TTJ	TELESCOPING TRANSFER JET
TTP	TELESCOPING TRANSFER PUMP
WSRC	WESTINGHOUSE SAVANNAH RIVER COMPANY

1.0 PERMIT APPLICATION FORM

The South Carolina Department of Health and Environmental Control (SCDHEC) Industrial Wastewater Treatment System Permit Application Form for the F and H-Area High-Level Radioactive Waste (HLW) Tank Farms is contained at the end of this section. This permit application is being submitted pursuant to the provisions identified in Section IX, High-Level Radioactive Waste Tank System(s), of the Federal Facility Agreement (FFA) for the Savannah River Site. [Administrative Docket No.: 89-05-FF] and the SCDHEC wastewater construction permit program [Regulation 61-67] to obtain a construction and operating permit for the F and H-Area HLW Tank Farms.

The F and H-Area HLW Tank Farms are one component of a larger integrated management system consisting of several facilities designed for the overall processing of the high-level radioactive wastewaters generated at the Savannah River Site (SRS). Since these integrated management facilities are in several different phases of construction and operation, the text for this permit application is written as if all of the SRS integrated HLW management facilities have been constructed and are operating. This approach will allow the establishment of a common baseline for describing these facilities in this permit application.

This permit application is structured to address the different units of the F and H-Area HLW Tank Farms individually. Section 1 provides the SCDHEC Permit Application Form and further clarification regarding the scope, effluent/treated by-product wastes, and certifications for this permit application. Section 2 provides the facility location information and identifies the individual components of the F and H-Area HLW Tank Farms. Section 3 provides a general description for the overall processing of SRS radioactive wastewaters. Section 4 provides a detailed description for each of the wastewater processing units covered in this permit application. Section 5 describes the characteristics of the influent and effluent waste streams. Section 6 addresses the calculations for the transfer pumps and waste tank

capacities. Section 7 provides a summary for the equipment specifications. Section 8 lists the major published references utilized in the preparation of this permit application. Appendix A compiles the typical pump curves for the pumps currently used at the Tank Farms. Appendix B gives the capacity calculations for the waste tanks. Appendix C contains the Assessment Report for the Tank Farms that is being submitted with this permit application pursuant to Section IX.A.1 of the FFA.

1.1 Scope of Permit Application

The purpose of this application is to provide information regarding the waste treatment processes at the F and H-Area HLW Tank Farms for the issuance of an Industrial Wastewater Treatment Permit. This permit application specifically addresses:

- The Existing Evaporator Systems,
- The Replacement Evaporator System,
- The In-Tank Precipitation (ITP) Facility,
- The Sludge Processing Operations,
- The Waste Tanks,
- The Waste Transfer System, and
- The F/H and H/S Interarea Transfer Lines (IALs).

All of the above mentioned structures, with the exception of the replacement evaporator, have been constructed. The design of the replacement evaporator is in progress. The evaporator site is currently being cleared of existing facilities. Physical construction of the replacement evaporator is scheduled to begin during the middle of 1991 with operations commencing in 1994.

The waste transfer system, F/H IAL, and the H/S IAL connect several different facilities to the F and H-Area HLW Tank Farms. These facilities and scope of this permit application are as follows:

Influent Waste Transfer Lines

- F-Area Separations Facility (Building 211/221-F)

  The waste generated at the F-Area Separations Facility is transferred to the F-Area HLW Tank Farm (FPP2 and FPP3) via four underground waste transfer lines. For the purpose of this application, this transfer line begins at the wall of the F-Area Separations Facility; approximate coordinates N78410, E53710.

- H-Area Separations Facility (Building 211/221-H)

  The waste generated at the H-Area Separations Facility is transferred to the H-Area HLW Tank Farm (HPP5 and HPP6) via four underground waste transfer lines. For the purpose of this application, this transfer line begins at the wall of the H-Area Separations Facility; approximate coordinates N72160, E63080.

- Equipment Decontamination/Repair Facility (Building 299-H)

  The waste generated at Building 299-H is transferred to the H-Area HLW Tank Farm (HPP5 and HPP6) via headers from the H-Area Separations Facility (Building 211/221-H). For the purpose of this application, this transfer line begins at the wall of the H-Area Separations Facility; approximate coordinates N72160, E63080.

- Receiving Basin for Offsite Fuels (RBOF) and Resin Regeneration Facility (RRF) (Building 244/245-H)

  The waste generated at the RBOF/RRF facilities is transferred to the H-Area HLW Tank Farm (HDB3) via an underground waste transfer line. For the purpose of this application, this transfer line begins at the security fence for the RBOF/RRF Facility; approximate coordinates N72050, E61760.

- F/H Effluent Treatment Facility (ETF) (Building 241-84H)

  An underground waste line runs from HDB-8 to the process sewer which connects the ETF to the Retention Basins. Contaminated stormwater/cooling water in the retention basins is normally sent to ETF. However, if the water contains contamination which exceeds the

ETF acceptance criteria, then the water is routed to the H-Area Tank Farm. This transfer line is permitted under SCDHEC Permit #13105.

A second underground waste line connects ETF to HDB-8 in order to send ETF waste concentrate to a waste tank if the radionuclide content of the concentrate is too high for Tank 50. This transfer line is permitted under SCDHEC Permit #12870.

o Defense Waste Processing Facility (DWPF) Vitrification Facility (Building 221-S)

The waste which is recycled from the DWPF Vitrification Facility is transferred to the H-Area HLW Tank Farm (HDB8) via an underground waste transfer line. For the purpose of this application, this transfer line begins at the outside wall of Building 221-S; approximate coordinates N73920, E64570.

In addition, the DWPF Vitrification Facility start-up cold runs waste will be trucked to the tank farm and pumped into Tank 47.

Effluent Waste Transfer Lines

o Evaporator 242-F Overheads

The treated wastewater produced from the 242-F evaporator system is discharged to the F/H ETF via the existing F/H ETF process sewer line (SCDHEC Permit #13105). For the purpose of this application, this transfer line ends immediately after the valve used to direct the flow of waste to either a waste tank or the F/H ETF. This valve is located within the 242-F evaporator unit; approximate coordinates N77320, E52760.

o Evaporator 242-H Overheads

The treated wastewater produced from the 242-H evaporator system is discharged to the F/H ETF via the existing F/H ETF process sewer line (SCDHEC Permit #13105). For the purpose of this application, this transfer line ends immediately after the valve used to direct the flow of waste to either a waste tank or the F/H ETF. This valve is located within the 242-H evaporator unit; approximate coordinates N71540, E61710.

o Evaporator 242-16F Overheads

The treated wastewater produced from the 242-16F evaporator system is discharged to the F/H ETF via the existing F/H ETF process sewer line (SCDHEC Permit #13105). For the purpose of this application, this transfer line ends immediately after the valve used to direct the flow of waste to either a waste tank or the F/H ETF. This valve is located within the 242-16F evaporator unit; approximate coordinates N76880, E52675.

- Evaporator 242-16H Overheads

  The treated wastewater produced from the 242-16H evaporator system is discharged to the F/H ETF via the existing F/H ETF process sewer line (SCDHEC Permit #13105). For the purpose of this application, this transfer line ends immediately after the valve used to direct the flow of waste to either a waste tank or the F/H ETF. This valve is located within the 242-16H evaporator unit; approximate coordinates N71200, E62710.

- Evaporator 242-25H Overheads (Future)

  The treated wastewater produced from the 242-25H evaporator system will be discharged to the F/H ETF via the existing F/H ETF process sewer line (SCDHEC Permit #13105). For the purpose of this application, this transfer line ends immediately after the valve which will be used to direct the flow of waste to either a waste tank or the F/H ETF. This valve will be located within the 242-25H evaporator unit; approximate coordinates N71950, E61350. The extension of the F/H ETF process sewer line to the 242-25H evaporator system will be addressed as a permit modification to SCDHEC #13105.

- Washed Sludge Slurry

  The radioactive sludge which is generated during the wastewater treatment operations will be transferred to the DWPF Vitrification Facility for further processing. For the purpose of this application, this transfer line ends at the outside wall of Building 221-S; approximate coordinates N73920, E64570.

- Washed Precipitate Slurry

  The radioactive precipitate which is generated during the wastewater treatment operations will be transferred to the DWPF Vitrification Facility for further processing. For the purpose of this application, this transfer line ends at the outside wall of Building 221-S; approximate coordinates N73920, E64570.

- Decontaminated Salt Solution

  The wastewater generated during ITP operations will be transferred to Tank 50 (SCDHEC Permit #14520) for subsequent solidification and disposal. For the purpose of this application, this transfer line ends at the wall of Tank 50; approximate coordinates N70780, E67610.

The waste transfer lines to/from these facilities and their associated permitting coordinates are identified on Figures 2-3, 2-4 and 2-5.

1.2 Effluent and Treated By-product Wastes

The F and H-Area HLW Tank Farms will generate five effluent/treated by-product waste streams which include:

- Evaporator overheads,
- RBOF/RRF treated waste,
- Washed precipitate slurry,
- Washed sludge slurry, and
- Decontaminated salt solution.

These waste streams, their associated disposition, and maximum annual flow rates are listed on the permit application form. The treated wastewaters (i.e., evaporator overheads and RBOF/RRF treated waste) from the F and H-Area HLW Tank Farms are discharged via the F/H ETF, SCDHEC Permit #12870, therefore, the F and H-Area HLW Tank Farms will not require a separate National Pollutant Discharge Elimination System (NPDES) outfall. All of the by-product waste streams (i.e., washed precipitate slurry, washed sludge slurry, and decontaminated salt solution) are transferred to other SRS facilities for additional treatment prior to disposal. Washed precipitate slurry and washed sludge slurry are sent to DWPF under SCDHEC Construction Permit #16783. Decontaminated salt solution is transferred to Tank 50 under SCDHEC Permit #14520.

1.3 Facility Contacts and Certification

The owner/operator certifications are provided on the permit application form.

1.4 Professional Engineer Certification

The attached permit application was prepared to obtain a construction and operating permit for the F and H-Area HLW Tank Farms. The initial portion of this facility was constructed in the early 1950's and has undergone several expansions/upgrades over the years.

The lead design and/or construction engineer responsible for the latest expansion project (i.e., ITP Facility) has reviewed the appropriate permit application sections and has provided his/her seal on the permit application form to indicate that the expansion facility was constructed in accordance with the design information provided in this permit application.

Physical construction of the Replacement Evaporator System is not yet complete. Physical construction for the H-Area Diversion Box #8 and the H/S Interarea Transfer Line are complete, however, the facilities are not in operation. The standard SCDHEC certification statements for these facilities are provided. Prior to operation of the Replacement Evaporator System, HDB8, and the H/S IAL, a final inspection will be conducted to ensure that construction was completed in accordance with the design information provided in this permit application. Based upon this final inspection, a construction certification statement will be provided to SCDHEC.

All of the other waste processing equipment was originally designed and constructed prior to 1982. Some of the Tank Farm systems have operated for over 30 years. Due to the length of time which has elapsed since the design and construction of these existing structures, the normal professional engineer certifications could not be provided. The process descriptions, figures, and specifications presented in this permit application for these older structures are based upon the original design and fabrication drawings, and other information provided by the Westinghouse Savannah River Company (WSRC). WSRC personnel have reviewed

this permit application to verify the accuracy of the information provided. In addition, the lead engineer who has supervised the preparation of this permit application has conducted an on-site inspection (to the extent possible) of the F and H-Area HLW Tank Farms to provide an independent verification that the permit application accurately describes the operations currently being conducted at the Tank Farms. Direct inspection of many structures was not possible since most of the structures emit harmful doses of radiation and/or are located underground to isolate the radiation source. As a result, the above mentioned inspection is not intended to verify the design aspects of the Tank Farms, but rather to ensure that the operations are accurately described.

1.5 Permit Modifications

A permit modification will be filed for the construction of additional treatment capacity or new treatment processes, and the alteration of an existing treatment process which either causes the effluent waste characterization limits specified in Section 5.2 to be exceeded or increases the effluent flow rate above the limits specified on the permit application form. Replacement of individual components with identical items (i.e. items that match the description in the permit) will not require permit modification. Submitted modifications will be in accordance with SCDHEC regulations and the provisions of the FFA Section IX.

As specified in Section IX.C, the United States Department of Energy (DOE) will provide secondary containment for all F and H-Area HLW Tank Farm System(s) or component(s) installed or replaced. The secondary containment system(s) will be (a) designed, installed, and operated to prevent any migration of hazardous or radioactive constituents, hazardous substances, or accumulated liquid out of the system(s) to the soil, groundwater, or surface water at any time during the use of the waste tank system(s); and (b) capable of detecting and collecting releases and

accumulated liquids until the collected material is removed. The secondary containment system(s) shall meet the standards contained in Sub-Section C of Appendix B ("Standards for Containment/Release Detection") attached to the FFA. The requirements to provide secondary containment do not apply for the replacement of individual components where (a) the components are replaced with identical items (i.e. items that match the description in the permit); and (b) the design of the component being replaced is addressed in the Tank Assessment Report that is attached as Appendix C.

1.6 Assessment and Inspections

In accordance with Section IX.A of the FFA, a written assessment for the F and H-Area Tank Farm system is provided as Appendix C. This report demonstrates which waste tank systems meet the secondary containment criteria listed in Section IX.C of the FFA. For each waste tank system that does not meet the secondary containment criteria, information is provided to demonstrate that these waste tank systems are adequately designed and have sufficient structural strength and compatibility with the hazardous and/or radioactive substances that will be stored or treated, to ensure that the waste tank system will not collapse, rupture, or fail.

In addition to the attached assessment report, annual inspection reports will be submitted to the SCDHEC on or before July 1st of each year. These inspection reports will satisfy the requirements of Section IX.A.2 of the FFA for on-going demonstrations. These inspections will be conducted annually for each waste tank system until the waste tank system is removed from service. Appendix C documents the methods, procedures, and limitations for inspecting waste tank systems.

South Carolina Department of Health and Environmental Control

APPLICATION FOR AN AS-BUILT CONSTRUCTION PERMIT
Industrial Waste Treatment System

Name of Project: F and H-Area High-Level Radioactive Waste Tank Farms

Location: Savannah River Site (SRS) County: Aiken and Barnwell

In accordance with the provisions of Act No. 1157 of the 1970 Acts and Joint Resolutions of the General Assembly of the State of South Carolina, and the regulations of the South Carolina Department of Health and Environmental Control, I (we) hereby make application, on behalf of the owner whose name and signature appear below, for permission to construct/operate a facility to treat high-level radioactive wastewaters generated by SRS operations. Specifically, the facility is constructed to allow radioactive decay, to separate radioactive and chemical components by utilizing clarification, evaporation and precipitation/filtration treatment technologies, and to process associated by-products. The effluent and corresponding by-product wastes include: (1) evaporator overheads and treated Receiving Basin for Offsite Fuels (RBOF)/ Resin Regeneration Facility (RRF) wastes which are sent to the F/H Effluent Treatment Facility (SCDHEC Industrial Wastewater Permit #12870) for final treatment and subsequent discharge to Upper Three Runs Creek (NPDES Permit #SC0000175), (2) washed precipitate slurry and washed sludge slurry which are sent to the DWPF Vitrification Facility (Permit Application - Revision 0, dated January, 1990) for additional treatment and incorporation into borosilicate glass, and (3) decontaminated salt solution which is sent to Tank 50 (SCDHEC Industrial Wastewater Permit #14520) for subsequent transfer to the Z-Area Saltstone Manufacturing and Disposal Facility where it will be solidified (SCDHEC Industrial Wastewater Permit #12683) for on-site disposal (SCDHEC Solid Waste Permit #IWP-217).

Owner's Name, Address, and Telephone No.: United States Department of Energy, Savannah River Operations Office, P.O. Box A, Aiken, SC 29802, (803) 725-8146

Name, Address, and Telephone No. of Organization Responsible for Operation and Maintenance (if different from Owner): Westinghouse Savannah River Company, Savannah River Site, Aiken, SC 29808 as authorized representative of the owner under United States Department of Energy contract number DE-AC09-88SR18035, (803) 725-1728.

The effluent waste and treated by-products are distributed as follows:

Effluent Wastes	Primary Disposition	Maximum Annual Flow Rate (gals/year)
Evaporator Overheads	F/H Effluent Treatment Facility	29,000,000
Treated RBOF/RRF Waste	F/H Effluent Treatment Facility	Included with the evaporator overheads.

Treated By-products

Decontaminated Salt Solution	Tank 50	13,000,000
Washed Precipitate Slurry	DWPF Vitrification Facility	800,000
Washed Sludge Slurry	DWPF Vitrification Facility	500,000

Effluent concentration of those constituents the system is designed to remove or reduce will be as follows: See Text

Coordinates of proposed point of discharge (to the nearest 5 seconds): via treatment through the F/H Effluent Treatment Facility at existing SRS Outfall H-016 (NPDES Permit #SC0000175) N 33° 16' 58" E 81° 41' 43"

ENGINEERING CERTIFICATIONS

ITP Facility

I have reviewed the information (i.e., summary specifications, process descriptions, etc.) provided in the permit application for the ITP Facility. I have placed my signature and seal on this application form signifying that to the best of my knowledge, information, and belief, the information provided accurately represents the as-built conditions for the ITP Facility.

Signed: _____ S.C. Registration No. 10901
Registered Professional Engineer

H-Area Diversion Box #8

Prior to final approval, I will submit a statement certifying that construction is complete and in accordance with approved plans and specifications, to the best of my knowledge, information and belief. This certification will be based upon a final inspection for design compliance by me or a representative of this office who is under my supervision.

Signed: R. Kowalski 5/6/91 S.C. Registration No. 14077
Registered Professional Engineer

SOUTH CAROLINA REGISTERED PROFESSIONAL ENGINEER No. 14077 RICHARD D. KOWALSKI

I have reviewed the information (i.e., summary specifications, process descriptions, etc.) provided in the permit application for the H-Area Diversion Box #8. To the best of knowledge, information, and belief, the information provided accurately represents the design conditions. I have placed my signature and seal on this application form signifying that I accept responsibility for the design of the H-Area Diversion Box #8.

Signed: John William Nelson S.C. Registration No. 4448
Registered Professional Engineer

SOUTH CAROLINA REGISTERED PROFESSIONAL ENGINEER No. 4448 JOHN WILLIAM NELSON

H/S Interarea Transfer Line

Prior to final approval, I will submit a statement certifying that construction is complete and in accordance with approved plans and specifications, to the best of my knowledge, information and belief. This certification will be based upon a final inspection for design compliance by me or a representative of this office who is under my supervision.

Signed: R. Kowalski 5/6/91 S.C. Registration No. 14077
Registered Professional Engineer

SOUTH CAROLINA REGISTERED PROFESSIONAL ENGINEER No. 14077 RICHARD D. KOWALSKI

I have reviewed the information (i.e., summary specifications, process descriptions, etc.) provided in the permit application for the H/S Interarea Transfer Line. I have placed my signature and seal on this application form signifying that to the best of my knowledge, information, and belief, the information provided accurately represents the design conditions for the H/S Interarea Transfer Line.

Signed: _____ S.C. Registration No. _____
Registered Professional Engineer

SOUTH CAROLINA REGISTERED PROFESSIONAL ENGINEER No. 4448 JOHN WILLIAM NELSON

Replacement Evaporator System

I have reviewed the information (i.e., summary specifications, process descriptions, etc.) provided in the permit application for the Replacement Evaporator System. I have placed my signature and seal on this application form signifying that to the best of my knowledge, information, and belief, the information provided accurately represents the design for the Replacement Evaporator System.

Signed: _____ S.C. Registration No. 10902
Registered Professional Engineer

Prior to final approval, I will submit a statement certifying that construction is complete and in accordance with approved plans and specifications, to the best of my knowledge, information and belief. This certification will be based upon a final inspection for design compliance by me or a representative of this office who is under my supervision.

Signed: R. Kowalski 5/6/91 S.C. Registration No. _____
Registered Professional Engineer

SOUTH CAROLINA REGISTERED PROFESSIONAL ENGINEER No. 14077 RICHARD D. KOWALSKI

Independent Verification

Facility Inspection

This permit application was prepared under my direction/supervision. The information (calculations, figures, and specifictions) used to prepare this permit application were provided by the Westinghouse Savannah River Company. This information was checked under my direction/supervision and the pertinent information was used to develop the text, figures, calculations, and summary specifications contained in this permit application. I have conducted an inspection, to the extent possible, of the waste process operations and equipment at the F and H-Area HLW Tank Farms. This inspection included observing the general site conditions of the F and H-Area HLW Tank Farms; viewing waste process equipment layout for the ITP filtration building, HDB8 (including HPP7 to HPP10), and Auxilliaray Pump Pit (APP); observing control rooms for the 242-1H and 242-16F evaporator systems, and ITP process operations; reviewing procedures for tank farm operations and inspections; observing the collection of surveillance photographs for Tank 14; viewing historical photographs for several waste tanks (including annulus photographs for Tanks 14, 46, 48 and 49, and internal photographs for Tank 48); viewing historical videos for the internal containment areas including 242-1F and 242-1H evaporator systems, HDB2, and FDB1; viewing historical photographs for HDB1 and the Type I waste lines in H-Area; observing surveillance/inspection activities for Tanks 9-16, 25-28, 33-34, and 44-47, and support facilities (ie., cooling water towers/pump room and emergency generators); visually inspecting the hold tank area for the 242-H, 242-16F, and 242-16H evaporator systems; and looking at various pieces of new process equipment (i.e., jumpers and a Cesium Removal Column). Based upon this inspection and the information provided to me by the Westinghouse Savannah River Company, I certify that, to the best of my knowledge, information and belief, this permit application accurately represents the current operations being conducted at the F and H-Area HLW Tank Farms.

Signed: Richard L Stegen S.C. Registration No. 12633
Registered Professional Engineer

SOUTH CAROLINA REGISTERED PROFESSIONAL ENGINEER No. 12633 RICHARD L. STEGEN

AUTHORIZED REPRESENTATIVE CERTIFICATION

I have reviewed this application and to the best of my knowledge, information, and belief I agree to the requirements and conditions that are contained in it. This permit application was prepared under the direction/supervision of an independent Registered Professional Engineer. The permit application has not been altered in any way upon being signed by the Registered Professional Engineer. Also, I agree to the admission of properly authorized persons at all reasonable hours for the purpose of sampling and inspection.

Signed: E W Pottmeyer Date: 6/27/91
Edward W. Pottmeyer, Jr.
Vice-President and General Manager
Nuclear Materials Processing Division

2.0 FACILITY LOCATION

The F and H-Area HLW Tank Farms are located in the central portion of the SRS as shown on Figure 2-1. The Tank Farm sites were chosen because of their favorable terrain, close proximity to the F and H-Area Separations Facilities (the major waste generating sources), and large isolation distance (minimum distance is approximately 5-1/2 miles) from the SRS boundaries. A site map of the F and H-Area HLW Tank Farms and other associated SRS facilities is provided as Figure 2-2. Detailed topographical maps for the site area are provided as Figures 2-3, 2-4 and 2-5.

2.1 F-Area HLW Tank Farm

The F-Area HLW Tank Farm is located on a 22-acre site and consists of 22 waste tanks, two evaporator systems, transfer pipelines, six diversion boxes, and three pump pits. The general layout of the waste processing equipment for the F-Area HLW Tank Farm is shown on Figure 2-6. The topographical map (Figure 2-2) provides additional details for the F-Area HLW Tank Farm. A list of the waste processing equipment and the corresponding year of construction is provided in Table 2-1.

2.2 H-Area HLW Tank Farm

The H-Area HLW Tank Farm is located on a 45-acre site and consists of 29 waste tanks, two evaporator systems, the ITP process building and associated equipment, transfer pipelines, eight diversion boxes, and ten pump pits. Of the 29 waste tanks located in H Area, 27 waste tanks are addressed in this permit application. The other two tanks (Tanks 16 and 50) are being handled separately as described below:

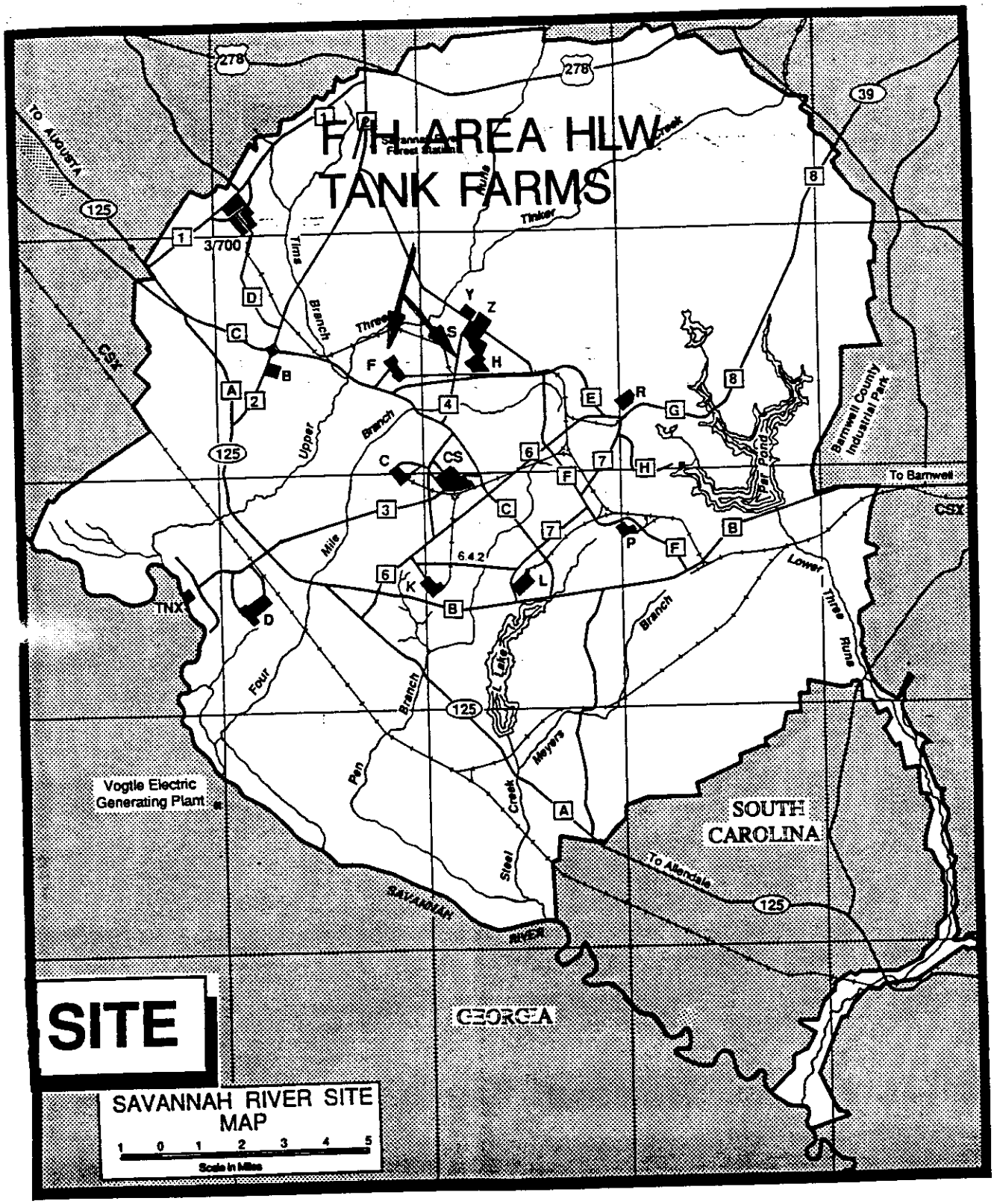

SITE MAP
FIGURE 2-1

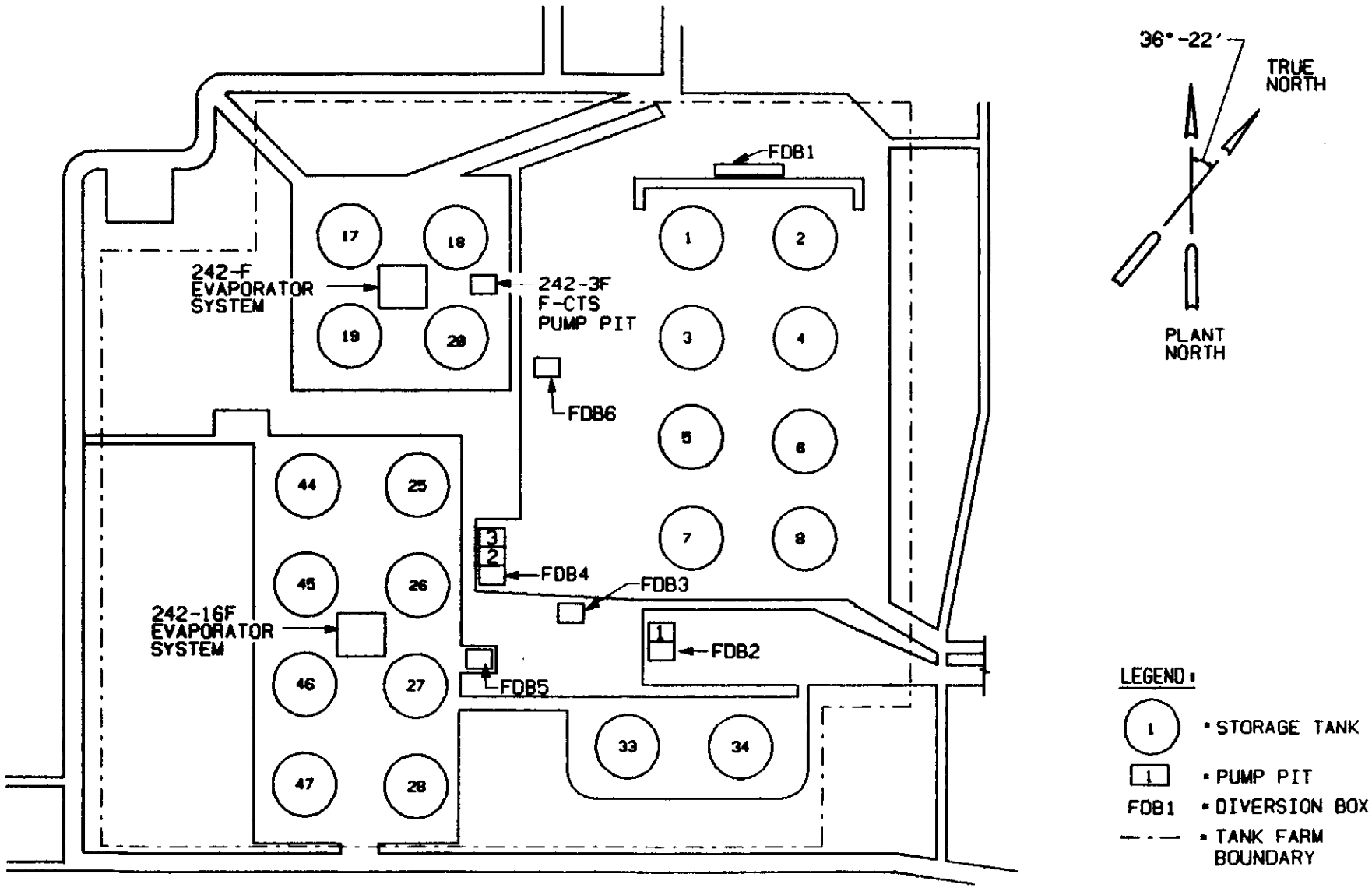

CAD NO.	TITLE:	NO SCALE
SE5-2-2006185	FIGURE 2-6 F-AREA HLW TANK FARM WASTE PROCESSING EQUIPMENT	6000-44-3190W

TABLE 2-1

F-AREA HLW TANK FARM EQUIPMENT LIST

EQUIPMENT NAME	CONSTRUCTION COMPLETION YEAR
Tanks	
1	1952
2	1952
3	1952
4	1952
5	1952
6	1952
7	1952
8	1952
17	1958
18	1958
19	1958
20	1958
25	1978
26	1978
27	1978
28	1978
33	1969
34	1972
44	1980
45	1980
46	1980
47	1980
Evaporator Systems	
242-F	1958
242-16F	1977

EQUIPMENT NAME	CONSTRUCTION COMPLETION YEAR
Diversion Boxes	
FDB1	1952
FDB2	1969
FDB3	1973
FDB4	1978
FDB5	1978
FDB6	1980
Pump Pits	
FPP1	1969
FPP2	1978
FPP3	1978
Transfer Pumps	
Added as required	
Slurry Pumps	
Added as required	
Jet Pumps	
Added as required	

Notes:

[a] Evaporator system consists of an evaporator, condenser, mercury collection tank, cesium removal pump tank and column, overheads hold tanks, an overheads diverting tank (242-F only), and overheads transfer pumps. The 242-F evaporator system also contains a waste concentrate transfer system (CTS) (242-3F) which was constructed in 1969.

- Tank 16 was removed from service in 1972 as a result of leakage. All waste materials were removed from the tank. In addition, the waste in the annulus space between the tank shell and secondary containment structure was removed; however, some residues remain. Tank 16 is being addressed under the corrective action [i.e., RCRA Facility Investigation (RFI)] provisions required by Section 3004(u) of the Hazardous and Solid Waste Amendments (HSWA) of 1984. These requirements are specifically identified in the SRS plant wide RCRA Part B Permit issued by the United States Environmental Protection Agency (EPA) on September 29, 1987 (Permit #SC1-890-008-989).

- The operation of Tank 50 is already permitted under SCDHEC Industrial Wastewater Permit #14520..

Although Tanks 16 and 50 are not included in this permit application, the waste transfer lines to/from Tank 16 and the decontaminated salt solution transfer line to Tank 50 (see Section 1.1) are part of this application.

The general layout of the waste processing equipment for the H-Area HLW Tank Farm is shown on Figure 2-7. The topographical map (Figure 2-5) provides additional details for the H-Area HLW Tank Farm. A list of the waste processing equipment and corresponding year of construction is provided in Table 2-2.

2.3 Interarea Transfer Lines

Several transfer lines have been constructed to transfer waste between the different SRS plant areas. These transfer lines are shown on Figure 2-2 and include:

- F/H Interarea Transfer Line,
- H/S Interarea Transfer Line, and
- H/Z Interarea Transfer Line.

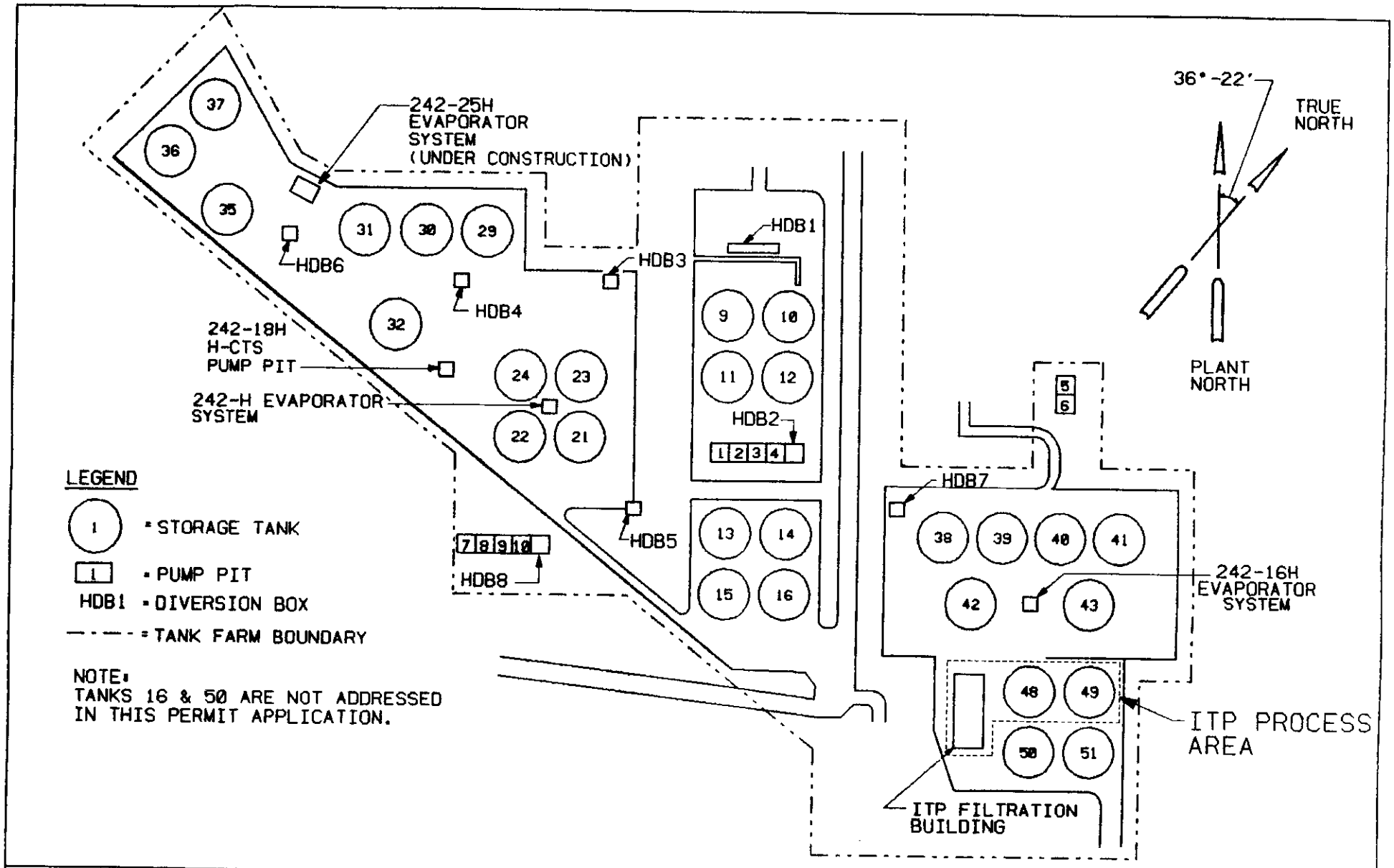

CAD NO.	TITLE:	NO SCALE
SE5-2-2006185	FIGURE 2-7 H-AREA HLW TANK FARM WASTE PROCESSING EQUIPMENT	6000-44-3190W

TABLE 2-2

H-AREA HLW TANK FARM EQUIPMENT LIST

EQUIPMENT NAME	CONSTRUCTION COMPLETION YEAR
Tanks	
9	1953
10	1953
11	1953
12	1953
13	1956
14	1956
15	1956
16[a]	1956
21	1961
22[c]	1962
23	1962
24	1962
29	1970
30	1970
31	1970
32	1970
35	1976
36	1977
37	1977
38	1979
39	1979
40[c]	1979
41	1979
42[c]	1979
43	1979
48[c]	1981
49[c]	1981
50[b,c]	1981
51[c]	1981

EQUIPMENT NAME	CONSTRUCTION COMPLETION YEAR
ITP Building (241-96H)	1990
Cross flow filters (2)	
Precipitate stripper column	
Precipitate column pumps (2)	
Wash stripper column	
Wash column pumps (2)	
Hold tanks (2)	
Fitrate transfer pumps (2)	
Diversion Boxes	
HDB1	1953
HDB2	1956
HDB3	1962
HDB4	1970
HDB5	1969
HDB6	1977
HDB7	1980
HDB8	1990
Pump Pits	
HPP1[f]	1956
HPP2	1956
HPP3	1956
HPP4	1956
HPP5	1979
HPP6	1979
HPP7	1990
HPP8	1990
HPP9	1990
HPP10	1990

TABLE 2-2 (Cont.)

H-AREA HLW TANK FARM EQUIPMENT LIST

EQUIPMENT NAME	CONSTRUCTION COMPLETION YEAR
Evaporator Systems	
242-H	1962
242-16H	1978
242-25H	1994[e]

EQUIPMENT NAME	CONSTRUCTION COMPLETION YEAR
Transfer Pumps	
Added as required	
Slurry Pumps	
Added as required	
Jet Pumps	
Added as required	

Notes:

[a] Tank 16 is not in service and will be addressed as part of the RFI Program; therefore, it is not addressed in this permit application.

[b] Tank 50 is permitted by SCDHEC under Industrial Wastewater Permit #14520; therefore, it is not addressed in this permit application.

[c] Tanks 22, 48, 49, and 50 are used for the ITP process. Tanks 21, 40, 42, and 51 are used for sludge processing.

[d] Evaporator system consists of an evaporator, condenser, mercury collection tank, cesium removal pump tank and column, overheads hold tanks, overheads transfer pumps. The 242-H evaporator system also contains a waste concentrate transfer system (CTS) (242-18H which was constructed in 1979).

[e] The 242-25H Evaporator Site is currently being cleared of existing facilities. Construction will begin on the replacement Evaporator System in mid-1991; the expected completion year is given.

[f] Pump pit HPP1 currently does not contain a pump tank; HPP1 is being used for storage of jumpers and equipment.

Of the above mentioned transfer lines, the H/Z Interarea Transfer Line is already permitted under SCDHEC Industrial Wastewater Permit #14338. The F/H and H/S Interarea Transfer Lines are addressed in this permit application (see Sections 4.8.5 and 4.8.6). Figures 2-3, 2-4 and 2-5 provide the detailed alignment for the F/H and H/S Interarea Transfer Lines. A list of the waste transferring equipment and corresponding year of construction is provided in Table 2-3.

TABLE 2-3

INTERAREA TRANSFER LINES
WASTE HANDLING EQUIPMENT LIST

EQUIPMENT NAME		CONSTRUCTION COMPLETION YEAR
F/H Interarea Transfer Line		1969
FPP1	(F-Area IAL transfer pump - included with the F-Area HLW Tank Farm Equipment List)	1969
HPP7	(H-Area IAL transfer pump - included with the H-Area HLW Tank Farm Equipment List)	1990
	High Point Flush Pit	1969
H/S Interarea Transfer Line		1990
HPP8	(included with the H-Area Tank Farm Equipment List)	1990
APP1[a]	(washed precipitate slurry transfer)	1990
APP2[a]	(treated aqueous recycle transfer)	1990
APP3[a]	(washed sludge slurry transfer)	1990
LPPP1[b]	(washed precipitate slurry transfer)	1990
LPPP2[b]	(treated aqueous recycle transfer)	1990
LPPP3[b]	(washed sludge slurry transfer)	1990

Notes:

[a] APP - Auxiliary Pump Pit

[b] LPPP - Low Point Pump Pit

3.0 PROCESSING OF SRS RADIOACTIVE WASTEWATERS

The SRS facilities have produced special nuclear materials since the 1950's for national defense. The SRS facilities include a number of production, process, and laboratory operations which are located on a 300-square-mile site owned by the DOE. Some of the waste generated by these operations are contained, processed, and treated in underground tanks located within the F and H Areas. In addition to the underground waste tanks, the F and H Areas contain several process units to convert the wastes to more stable forms and to prepare the wastes for final treatment prior to discharge or disposal. The underground waste tanks, process units, and associated waste transfer systems are the subject of this permit application and are generally known as the F and H-Area HLW Tank Farms.

The F and H-Area HLW Tank Farms are one component of a larger integrated treatment system consisting of several facilities designed for the overall processing of several radioactive waste streams generated by the SRS. These radioactive waste streams are described in Section 5.1 of this permit application. The integrated waste treatment system consists of five major facilities known as:

- The F and H-Area HLW Tank Farms,
- The F/H Effluent Treatment Facility (ETF),
- The Tank 50/Z-Area Saltstone Manufacturing and Disposal Facility (SMDF),
- The Defense Waste Processing Facility (DWPF) Vitrification Facility, and
- The Consolidated Incineration Facility (CIF).

The above listed facilities are in different phases of construction and operation. The F and H-Area HLW Tank Farms, F/H ETF, Tank 50 and Z-Area SMDF are operational. Construction of the DWPF Vitrification Facility is completed and radioactive operations are expected to start in January, 1993.

Construction of the CIF is expected to begin in August, 1991, pending an approved RCRA permit.

A flow diagram of the integrated wastewater treatment system is shown as Figure 3-1. The integrated treatment system operations are similar to a traditional wastewater treatment plant but are more specialized and require a much longer time period for treatment. Each integrated treatment facility is specifically designed to perform a specialized task. The F and H-Area HLW Tank Farms provide activities which are similar to the front end processes of a traditional wastewater treatment plant; that is, equalization, primary clarification, and solids removal and processing. The F/H ETF provides tertiary (physical/chemical) treatment for final polishing of wastewaters prior to discharge to Upper Three Runs Creek.

The Tank Farm wastewater treatment activities generate by-product wastes (i.e., sludges and process chemicals) which are initially pretreated at the H-Area HLW Tank Farm prior to transfer to other facilities. The management of these by-product wastes is analogous to that employed at conventional wastewater treatment plants for their generated sludges. The Z-Area SMDF provides solidification and on-site disposal for wastewaters that have high concentrations of dissolved solids. The DWPF Vitrification Facility vitrifies insoluble solids including tank farm sludge and ITP precipitate. The CIF incinerates a variety of SRS generated wastes including the organic compounds added to and formed during the integrated treatment processes.

This integrated treatment system will be used to process the current and future inventory of the SRS generated wastes. This integrated treatment system will reduce the accumulated waste volume and will allow many of the waste tanks to be removed from service.

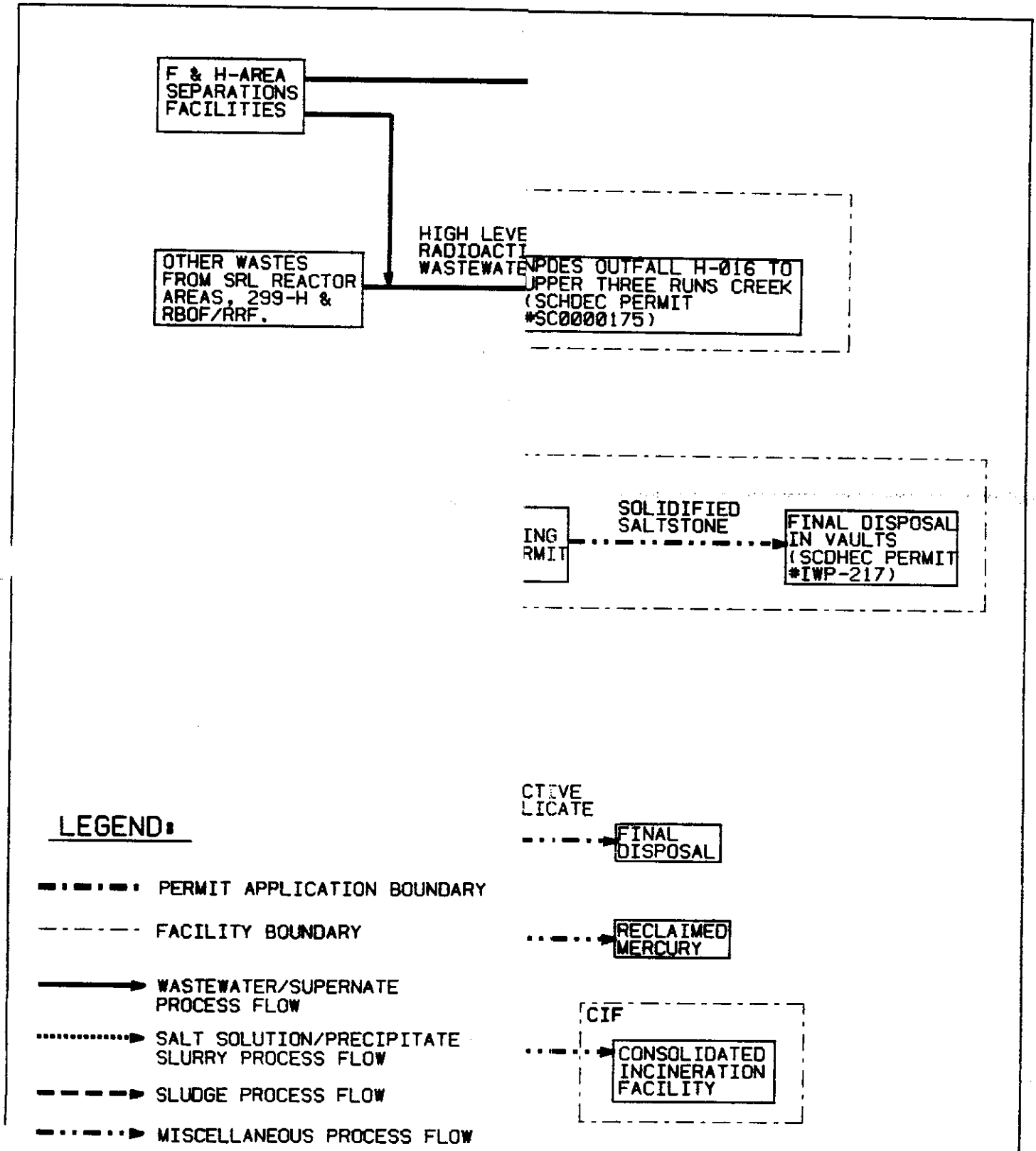

CAD NO.	TITLE	NO SCALE
SE5-2-2006190		6000-44-3190W

A brief description for each integrated treatment facility is provided in the subsections that follow. These descriptions are provided to allow an understanding of the overall management of radioactive wastewater at the SRS. Each integrated treatment facility is addressed under a separate permit application.

3.1 F and H-Area HLW Tank Farms

The F and H-Area HLW Tank Farms contain waste tanks and evaporator systems to manage and treat the high-level radioactive wastewaters generated by the SRS operations. The above units function to receive fresh wastes, allow radioactive decay by waste aging, provide primary clarification by gravity settling, and remove dissolved salts by evaporation. The treated wastewater (overheads from the evaporator systems) is transferred to the F/H ETF for final treatment prior to discharge to Upper Three Runs Creek. Mercury is recovered from the wastewater and collected for potential recycle reuse within the SRS separations processes.

The H-Area HLW Tank Farm also contains process units to treat the accumulated sludges and salts. The sludge processing operation (see Section 4.6) is designed to prepare the sludges for transfer to the DWPF Vitrification Facility. The ITP process (see Section 4.5) is designed to convert the soluble salts into an insoluble precipitate in solution which is filtered to separate the solid precipitate from the liquid solution. The liquid filtrate is transferred to Tank 50 which is the feed tank for the Z-Area SMDF. The resulting precipitate slurry is transferred to the DWPF Vitrification Facility.

Further details for the F and H-Area HLW Tank Farms are contained throughout this permit application.

3.2 F/H Effluent Treatment Facility

The F/H ETF, permitted under SCDHEC Industrial Wastewater Permit #12870, functions as the final treatment for the evaporator overheads prior to discharge at NPDES outfall H-016 (SCDHEC Permit #SC0000175). The F/H ETF removes low levels of radioactivity and process chemicals to achieve established discharge limitations. The treatment residues from the F/H ETF process units are normally sent to Tank 50 (located in the H-Area HLW Tank Farm and permitted under SCDHEC Industrial Wastewater Permit #14520). Tank 50 is the waste feed tank for the Z-Area SMDF.

3.3 Tank 50/Z-Area Saltstone Manufacturing and Disposal Facility

Tank 50, permitted under SCDHEC Industrial Wastewater Permit #14520, is the waste feed tank for the Z-Area SMDF. This tank serves to hold the decontaminated salt solution produced by the ITP process and the waste concentrate produced by the F/H ETF operations. These waste streams contain low-levels of radionuclides and/or process chemicals which prohibit their discharge to the environment. The waste streams are combined in Tank 50 and transferred to the Z-Area SMDF via the H/Z Interarea Transfer Line (SCDHEC Industrial Wastewater Permit #14338).

The Z-Area SMDF, permitted under SCDHEC Industrial Wastewater Permit #12683 and Solid Waste Management Permit #IWP-217, is designed to solidify the decontaminated salt solution and F/H ETF treatment residues into a cement matrix for on-site land disposal.

3.4 DWPF Vitrification Facility

The DWPF Vitrification Facility is designed to vitrify the tank sludge and ITP precipitate slurries, which are generated from the F

and H-Area HLW Tank Farm treatment operations, into a solid borosilicate glass matrix for offsite disposal at the High-Level Radioactive Waste Federal Geological Repository. To obtain an acceptable glass quality, the slurries are treated (prior to vitrification) to remove the volatile organic process chemicals added during the ITP process and to reclaim mercury from the slurries. The volatile organics are collected and transferred to the Organic Waste Storage Tank (OWST) for temporary storage prior to being incinerated at the CIF. (The operation of the OWST is addressed in a separate permit application.) Mercury is reclaimed from the slurries.

The DWPF Vitrification Facility is a "closed-loop" operation (no direct aqueous discharges to the environment). The wastewater generated during process operations is returned to the H-Area HLW Tank Farm for reprocessing. This recycle waste stream is combined with the other Tank Farm wastes and is processed through the H-Area HLW Tank Farm treatment units.

The treatment activities associated with the DWPF Vitrification Facility are addressed in a separate permit (SCDHEC Industrial Waste Water Permit No. 16783).

3.5 Consolidated Incineration Facility

The CIF is designed to incinerate liquid and solid waste materials containing a limited amount of radionuclides. The high temperatures of the rotary kiln incinerator will destroy the volatile organic waste stream generated by the DWPF Vitrification Facility as well as other SRS generated wastes. The operation of the CIF is addressed in a separate permit application.

4.0 F AND H-AREA HLW TANK FARM DESCRIPTION

This Section is divided into several subsections which describe the individual wastewater, salt, and sludge treatment processes. Section 4.1 provides an overall summary of the Tank Farm operations. Section 4.2 addresses the need for operational flexibility by describing the process changes which are part of normal operations. Section 4.3 describes the waste receipt and initial aging (ie., radioactive decay) operations. Section 4.4 provides information related to the evaporator systems which are used to treat the radioactive wastewaters. Section 4.5 and 4.6 describes the treatment processes for the salt and sludge components of the radioactivity wastewater, respectively. Section 4.7 provides design and usage information for the waste tanks. Section 4.8 addresses the waste transfer operations, including transfer lines, diversion boxes, valve boxes and transfer/feed pumps. Finally, Section 4.9 provides a description of the backup power provisions.

4.1 General Process Description

The F and H-Area HLW Tank Farms were constructed to:

- Receive radioactive wastewaters generated by the various SRS production, process, and laboratory facilities,
- Isolate the radioactive wastes from the environment, plant workers, and general public,
- Allow radioactive decay by aging the wastewater,
- Provide wastewater clarification by gravity settling in waste tanks,
- Remove soluble salts from the wastewater by evaporation and/or ion exchange, and
- Pretreat the accumulated sludges and salt solutions to allow management of these wastes at other wastewater treatment facilities (i.e., DWPF Vitrification Facility and Z-Area SMDF) for conversion to more stable forms and placement in permanent disposal facilities.

To accomplish the above objectives, the Tank Farms contain 51 large underground waste tanks to receive and age the waste streams, five

evaporator systems (the fifth evaporator system is currently under construction) to remove soluble salts, a precipitation/filtration system (i.e., ITP) to pretreat the salt solutions, a sludge washing system (i.e., Sludge Processing) to pretreat the accumulated sludges, and a transfer system to transfer the wastes.

An overall process flow diagram for the F and H-Area HLW Tank Farms is provided as Figure 4-1. The process flow diagram shows the interrelationship between each of the above mentioned systems. These interrelationships are described in further detail below and within other corresponding subsections [i.e., Waste Receipt/Aging (Section 4.3), Evaporator Systems (Section 4.4), ITP (Section 4.5), Sludge Processing (Section 4.6), Waste Tanks (Section 4.7), and Waste Transfer Operations (Section 4.8)].

The influent wastewaters are classified as high-level radioactive wastes (HLW). These HLW waste streams are generated from several different sources and are introduced into the Tank Farms at several different locations as shown on Figure 4-1. HLWs are produced during the reprocessing of spent nuclear fuel or are derived from other processes which handle HLWs. The HLWs emit harmful levels of radiation and must be isolated to prevent employee exposure to radiation; therefore, direct inspection and maintenance of process equipment is not normally conducted. The process equipment is shielded with lead, soil, concrete, steel, or any combination of the four materials. Maintenance is normally conducted remotely to prevent exposure of personnel to radiation sources. Should hands-on maintenance be required, the piece of process equipment must be decontaminated and isolated from radiation sources.

The waste treatment activities conducted at the F and H-Area HLW Tank Farms are "closed-loop" processes which do not have any direct aqueous discharges to the environment. All of the effluent waste streams produced by the Tank Farms are transferred to other SRS facilities for further treatment.

The treatment activities conducted at the F and H-Area HLW Tank Farms are briefly described below.

Waste Receipt and Aging

The freshly generated HLW are further classified as either High-Heat Waste (HHW) or Low-Heat Waste (LHW). The HHW is generated during the first solvent extraction of the spent nuclear fuel. The LHW is generated from the second and subsequent solvent extractions of the spent nuclear fuel and other support operations (i.e., RBOF/RRF, F/H ETF, Building 299-H, and SRL facilities). The freshly generated HHW and LHW are segregated to improve processing of the residual sludges and salt solutions within the Tank Farms and DWPF Vitrification Facility.

The HHW contains most of the radionuclides and must be aged in a receipt tank to permit radioactive decay of the short-lived radioisotopes (i.e., half-life is less than 90 days) prior to further processing. The thermal energy resulting from radioactive decay of these short-lived radioisotopes requires supplemental cooling (i.e., cooling coils) to maintain the temperature of the HHW receipt tank within operating guidelines. When the radioactivity of the HHW in the receipt tank has decayed sufficiently, the liquid supernate is decanted and transferred to a HHW evaporator feed tank for subsequent removal of the dissolved solids through evaporation.

The freshly generated LHW contains a lower concentration of radionuclides; as a result, the LHW normally does not require aging and supplemental cooling prior to evaporation. These LHW are normally received directly in a LHW evaporator feed tank for subsequent removal of the dissolved solids through evaporation.

Waste Evaporation

The HHW and LHW supernates are transferred from the evaporator feed tanks and heated to the aqueous boiling point in an evaporator. The HHW and LHW are normally processed through segregated evaporator systems. The evaporated liquids (overheads) are condensed and, if required, processed through an ion exchange column for cesium removal. The overheads are then transferred to the F/H ETF for final treatment prior to being discharged to Upper Three Runs Creek. The evaporator overheads may also be recycled back to a waste tank should evaporator process upsets occur. Mercury is also recovered from the wastewater and collected for potential recycle reuse within the SRS separations processes.

Salt Cake Processing

The HHW and LHW waste streams contain dissolved salts which are removed through evaporation. The concentrated wastes from the evaporators (evaporator bottoms) are sent to a waste concentrate receipt tank with supplemental cooling. Supplemental cooling is required for the evaporator bottoms to remove the heat which is added during evaporation. As the hot concentrated waste cools, a solid salt cake forms and is deposited within the waste concentrate receipt tank. The supernate remaining in the waste concentrate receipt tank is returned to an evaporator feed tank for further processing. Over time, the waste concentrate receipt tank fills

with salt cake. Aging of this salt solution is also required since the radionuclides are concentrated by the evaporation process.

Starting in 1981, the HHW and LHW evaporator bottoms have been segregated where practical into separate waste concentrate receipt tanks. Prior to 1981, HHW and LHW evaporator bottoms were combined in the same waste concentrate receipt tank. The combined HHW/LHW salt cakes are managed as a HHW salt cake.

The HHW and LHW salt cakes undergo another aging period of several years before radioactive/chemical decontamination may proceed. The aged HHW and LHW salt cakes are dissolved and transferred in batches to the ITP reaction vessel (Tank 48). The dissolved HHW and LHW salt cakes (called salt solution) are combined with each other to achieve blending of the radionuclides and other chemical compounds. This blending is performed to provide more consistent waste feed to the ITP process and subsequent waste feed to the Z-Area SMDF and DWPF Vitrification Facility. The combined salt solution is treated with chemical compounds to precipitate and adsorb a majority of the radionuclides. The resulting slurry is filtered within the ITP filter building. The filtrate (called decontaminated salt solution) is transferred to Tank 50. The decontaminated salt solution is combined with the waste concentrate from the F/H ETF and transferred to the Z-Area SMDF for solidification and on-site disposal. The remaining precipitate slurry undergoes a washing step to remove residual soluble salts and process chemicals prior to being transferred to the DWPF Vitrification Facility for vitrification into a solid glass matrix for disposal.

Sludge Processing

The HHW and LHW waste streams generated by the F and H-Area Separations Facilities contain insoluble and highly radioactive metal hydroxides (manganese, iron, and aluminum) which settle to the bottom of the waste

tanks to form a sludge layer. The HHW and LHW are normally segregated; however, HHW and LHW have been placed in the same waste tank due to capacity limitations. The combined sludge is likely to be managed as HHW sludge. However, the heel volume (approximately 100 gallons) from a HHW tank may occasionally be pumped to a LHW Tank. In this situation the mixture will likely to be treated as LHW due to the dilution of the HHW (approximately 100 gallons of HHW mixed with greater than 100,000 gallons LHW).

In addition to the fresh waste receipt aging, the accumulated HHW and LHW sludges are aged to allow radioactive decay. The aged sludges are transferred to the sludge processing tanks (Tanks 40, 42, and 51) for washing and, if necessary, aluminum dissolution. The HHW and LHW sludges are also combined with each other to provide a consistent effluent waste stream. The washed sludge slurry is transferred to the DWPF Vitrification Facility for vitrification into a solid glass matrix for disposal.

Waste Transfer

A network of transfer lines is used to transfer wastes between the waste tanks, process units, and the various SRS areas (i.e., F Area, H Area and S Area). These transfer lines have diversion boxes containing removable pipe segments (called jumpers) to complete the desired transfer route. Various sized and shaped jumpers can be fabricated and installed to allow the transfer route to be changed. The use of diversion boxes and jumpers allow flexibility in the movement of wastes.

The waste flows through the evaporator systems and ITP filtration building are designed to be conducted on a continuous basis. All other wastes are normally transferred in batches. Transfer of waste from any waste tank to any other waste tank, process unit, or treatment facility is possible with the proper arrangement of pumps, transfer lines, and valves. Administrative procedures are established and followed to ensure that the

transfer of wastes is conducted safely and properly.

4.2 Normal Operations

In order to process the existing waste inventories and to adhere to the schedule established for the removal of waste tank systems from service, several changes will be required to allow continuous treatment/removal operations. These changes are considered part of normal operations and are not considered to be modifications to this permit application. These changes will not impact process flow rates, process treatment technologies currently used, and waste effluent characteristics.

This section describes the normal operations which are conducted at the Tank Farms. These normal operations include:

- Replacing existing equipment with identical equipment (i.e., items that match the description in the permit),
- Modifying the waste transfer routes by installing new jumpers and adding/moving waste transfer pumps,
- Changing of the designated use of a particular waste tank,
- Adding process chemicals directly to the waste tanks to: (1) adjust the pH and nitrite/nitrate concentrations, (2) remove accumulated salt cake and/or sludge materials, (3) clean/decontaminate the waste tanks, process equipment, and transfer lines/equipment, (4) process salt solutions during ITP operations, and (5) process sludge during sludge processing operations, and
- Making alterations (i.e., process chemicals, process instrumentation, process piping, and process equipment) which do not change the effluent waste characterizations or flow rates specified in Section 5.2.

These normal operations are considered to be part of this permit application. Specific situations which are considered normal operations are described in further detail below.

Equipment Replacement

When a piece of equipment reaches the end of its useful service life, it is replaced. Equivalent equipment will be used to replace the older equipment. In the case of replacing pumps, the minimum specifications [i.e., transfer capacity, total dynamic head (TDH)] listed in Section 7.6 will be maintained. The replacement of equipment is considered part of normal operations.

Transfer Route Modification

Upon identification of a specific transfer need, the necessary connections to provide a continuous path are made. If the transfer operation has never been performed before, transfer pumps and/or specifically fabricated jumpers (see Section 4.8.2) may need to be installed. Where possible existing transfer equipment will be utilized; otherwise, equivalent equipment will be purchased and installed. The movement and installation of this equipment (i.e., fabrication/installation of a new jumper, installation of a transfer pump or jet pump within an existing waste tank, and using the existing waste lines to provide a new transfer route) is considered part of normal operations.

The movement and addition of this transfer equipment does not effect the waste treatment capabilities or the quantity/quality (as specified in Section 5.2) of the effluent wastes. The additional transfer equipment allows movement of wastes between waste tanks and/or treatment units within each of the Tank Farm areas. The changes which are made to the waste transfer equipment will not impact the overall operation of the Tank Farm.

Waste Tank Use

The Tank Farm operations are conducted to allow process flexibility by periodically changing the designated use of a particular waste tank (see Section 4.7.2). Changing the designated use of these waste tanks is analogous to the routine rotation of process feed tanks at a typical wastewater treatment plant. The design of the SRS waste transfer system allows the designated use of a waste tank to be switched between waste receipt, process feed, and waste processing. These changes will require the movement of existing equipment (i.e., transfer and slurry pumps) and/or installation of new equipment (i.e., transfer and slurry pumps, jumpers, valve boxes, pipes and valves to accommodate installation, and associated instrumentation) to transfer wastes from existing tanks to the appropriate treatment units. The movement and installation of the existing/new waste transferring equipment is considered part of the normal operations.

Process Chemical Additions

The waste composition has been monitored and controlled since 1976 to prevent the development of waste tank leaks resulting from nitrate induced stress-corrosion cracking and pitting corrosion (see Section 7.4.3). The waste composition is adjusted by periodically adding sodium hydroxide and sodium nitrite. The process chemicals are added directly to a waste tank from a tank truck through an existing tank riser. The unloading operations are supervised to ensure that spills/leaks do not occur. Other process chemicals, as identified in Section 5.1.9, may be used in the future to obtain the desired pH and nitrite/nitrate concentrations.

Other process chemicals may also be added to the waste tanks to aid in the removal of salt cake, the removal of tank sludge, and the cleaning/decontamination of the waste tanks during closure operations. These process chemicals may be added to the waste tanks by tank trucks (as

described above), or by temporarily erected chemical feed systems. Future plans may include permanently installed chemical feed systems for some of the tanks. The process chemicals and resulting waste residues will be combined and processed with the other influent waste streams by using the existing treatment units. The addition of process chemicals which do not cause the effluent waste characterization to be exceeded (see Section 5.2) is considered part of normal operations.

Other Alterations

Other alterations which maintain or improve existing process operations, do not cause the effluent waste characterization to be exceeded, or change the effluent flow rates (see permit application form) are considered normal. These alterations may include:

- Adding or removing process equipment (i.e., agitators, slurry pumps, and transfer pumps) to the waste tanks,
- Adding or removing process instruments (i.e., thermocouples, flow measurement devices, pressure gauges, gas analyzers, etc.), and
- Adding or removing process piping (i.e., jumpers, valves, and waste transfer lines within the Tank Farm site boundaries).

These alterations will neither impact the overall operation of the Tank Farms nor change the quantity or the quality of the effluent waste streams.

4.3 Waste Receipt and Initial Aging

The majority of the waste received at the Tank Farms is either a HHW waste stream or a LHW waste stream. The F and H-Area Separations Facilities are the primary waste generating sources. Each Separations Facility generates both a HHW and LHW waste stream. In addition to these waste streams, five

other LHW waste streams and other incidental waste streams are received at various locations in the Tank Farms. The characteristics of these influent wastes are provided in Section 5.1.

Adding fresh LHW to a waste tank already containing HHW is not a problem since the HHW characteristics are not changed. Generally, the opposite is not true; adding a small amount of HHW to a waste tank containing LHW can change the characteristics (i.e., radionuclide content) of the LHW, but it depends on the quantity and characteristics of the HHW added. As a result, the wastes are normally segregated and different management practices are employed for the HHW and LHW. The waste receipt and initial aging practices for both HHW and LHW are described in this section. In some instances, HHW and LHW have been placed into the same waste tank. The combined HHW/LHW is managed as a HHW.

4.3.1 High-Heat Waste

The HHW waste streams are generated from the first extraction cycle conducted at the F and H-Area Separations Facilities. The freshly generated HHW contains a large concentration of short-lived radionuclides. Short-lived radionuclides are defined as those with a half-life of 90 days or less.

To prevent the potential discharge of harmful levels of radiation, the freshly generated HHW must be isolated and aged to allow radioactive decay prior to further processing. The aging (radioactive decay) process occurs within a HHW receipt tank. The radioactive decay process for HHW produces a large amount of thermal energy (decay heat). The freshly generated HHW contains radioactive fission products which produce decay heat ranging from 5 to 16 Btu/hour-gallon. To remove this decay heat, HHW receipt tanks need supplemental cooling (i.e., cooling coils).

The HHW generated by F-Area Separations Facility is normally received and aged in two HHW receipt tanks (Tanks 33 and 34). One HHW receipt tank is used to receive fresh waste while the other is being used to age the previously generated HHW. When the receipt tank that is actively receiving HHW is nearing its capacity, the supernate from the receipt tank with the aged HHW is transferred to a HHW evaporator feed tank (Tank 13). The emptied waste tank then becomes the receipt tank for the next fill cycle and the freshly filled tank becomes the aging tank. The insoluble HHW components settle out within these receipt tanks. The sludge accumulates with successive receipt/aging cycles. This sludge is either periodically removed to maintain a sufficient capacity for waste receiving, or a different waste tank is designated as the HHW receipt tank.

what tanks are available?

The HHW generated by H-Area Separations Facility contains a larger concentration of radionuclides. This HHW is managed in a similar fashion; however, two or more HHW receipt tanks (Tanks 32, 35 and 39) are required to accommodate the longer aging period.

For an individual HHW receipt tank, the normal time required to complete one receipt/aging cycle is a minimum of one year. After the radioactivity in the HHW has decayed sufficiently, the liquid supernate is transferred to a HHW evaporator feed tank (Tank 13) for further processing.

4.3.2 Low-Heat Waste

The LHW waste streams are HLW that are not classified as HHW. The LHW are primarily generated by the second and subsequent extraction cycles conducted in the Separations Facilities. LHWs

are also generated from the reactor areas, the DWPF Vitrification Facility, and other production support facilities.

The LHW waste streams contain fewer radionuclides; as a result, LHW waste streams do not require aging prior to evaporation and are sent directly to a LHW evaporator feed tank. Currently, there are two LHW evaporator feed tanks (Tank 26 in F Area and Tank 43 in H Area) which are used to continuously receive freshly generated LHW.

The LHW generated by the RBOF/RRF contains a lower concentration of radionuclides and dissolved solids (less than 2%). The disposition of this waste stream depends primarily upon the radioactivity level of the waste. Generally, waste with radioactivity levels greater than 100,000 disintegrations per minute per milliter (Cs-137) is routed to Tank 21 for evaporation or use as process water. Otherwise waste is routed to Tank 23 for processing through a Cesium Removal Column (CRC) prior to transferring to the F/H ETF.

Unlike HHW receipt tanks, fresh LHW and RBOF/RRF receipt tanks do not normally require supplemental cooling. The radioactive decay heat produced by freshly generated LHW ranges from 0.2 to 0.8 Btu/hour-gallon.

4.4 Wastewater Evaporation

The HHW and LHW streams contain both soluble and insoluble compounds. The insoluble compounds settle out of the wastewater by gravity and accumulate at the bottom of the HHW receipt tanks and the LHW evaporator feed tanks. The resulting supernate and sludges are processed separately. This section addresses the processing of the supernate and Section 4.6 addresses processing of the sludge.

The supernate contains soluble radionuclides and process chemicals which precludes discharge of the supernate to the environment. Evaporator systems are used to remove these soluble components from the wastewater.

The evaporator processes to remove these dissolved solids from the supernate waste began in 1960. There are four existing evaporator systems in the F and H-Area HLW Tank Farms; two are located in F Area and two in H Area. Construction of an additional evaporator system is planned to be completed by December, 1993. The evaporator system locations are shown on Figures 2-6 and 2-7. The evaporator systems are designated as:

- 242-F (Existing LHW Evaporator Systems)
- 242-H (Existing HHW Evaporator Systems)
- 242-16F (Existing LHW Evaporator Systems)
- 242-16H (Existing LHW Evaporator Systems)
- 242-25H (Replacement HHW Evaporator System)

The design and operation of each evaporator system is similar. Process flow diagrams for the existing evaporator systems (242-F, 242-H, 242-16F, and 242-16H) and the replacement evaporator system (242-25H) are provided as Figures 4-2 and 4-3 respectively. The evaporator process flows are described briefly below and in more detail in Sections 4.4.1 and 4.4.2. A description of the process equipment and various differences for each evaporator system is described in Section 4.4.3.

In general, the liquid supernate is decanted from an evaporator feed tank and is transferred to an evaporator. Within the evaporator, the supernate is heated to its aqueous boiling point which forms a vapor phase (called evaporator overheads). The evaporated overheads are condensed and monitored to ensure that excessive amounts of radionuclides are not entrained. If required, the overheads are passed through an ion exchange column to remove radioactive cesium. Following the condensing and monitoring, the evaporator overheads are transferred to the F/H ETF for final treatment and discharge to Upper Three Runs Creek. Up to 29 million gallons of evaporator overheads (including the treated RBOF/RRF waste) are

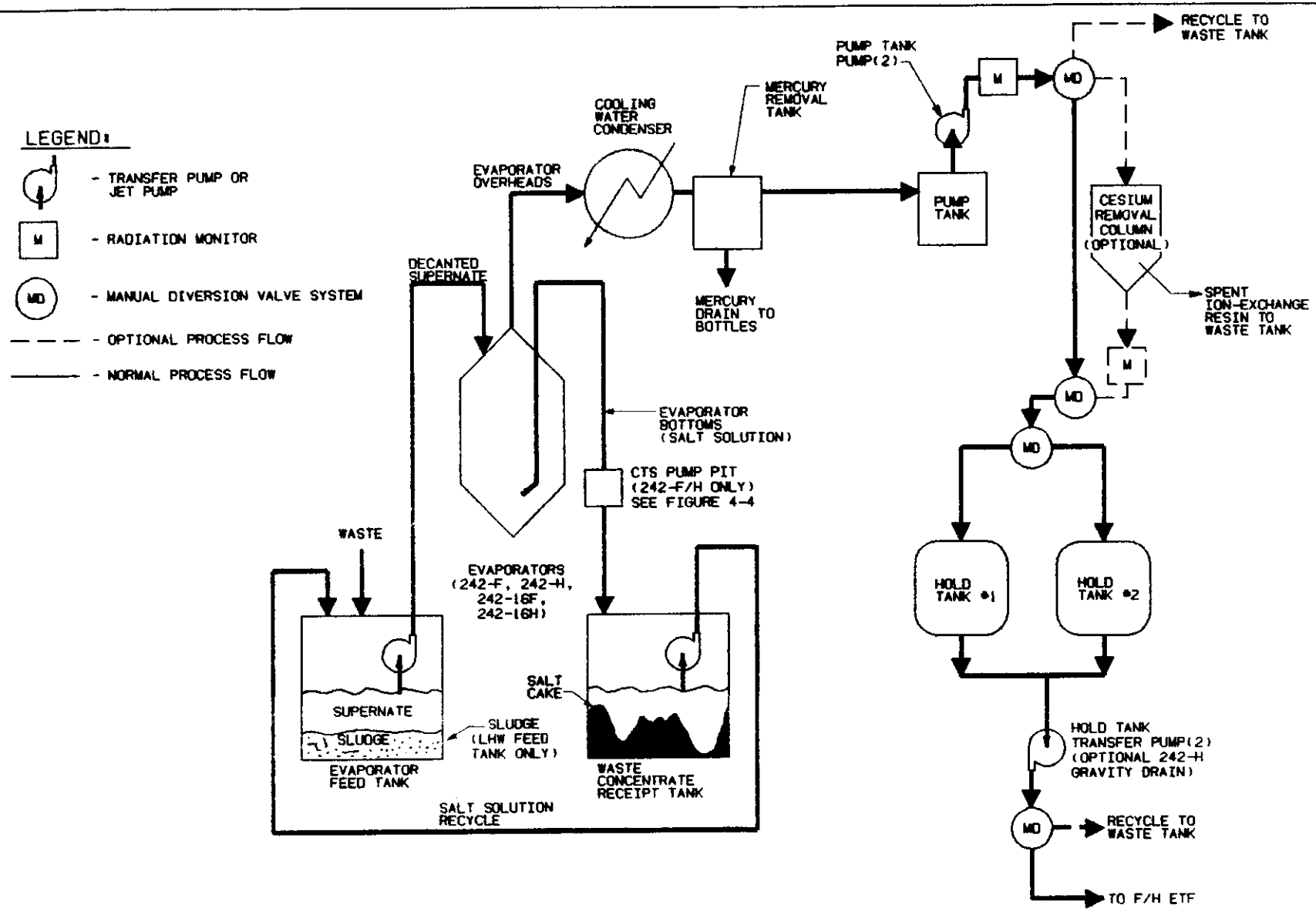

CAD NO.	TITLE	NO SCALE
SE5-2-2006186	FIGURE 4-2 EXISTING EVAPORATOR SYSTEMS - PROCESS FLOW DIAGRAM	6000-44-3190W

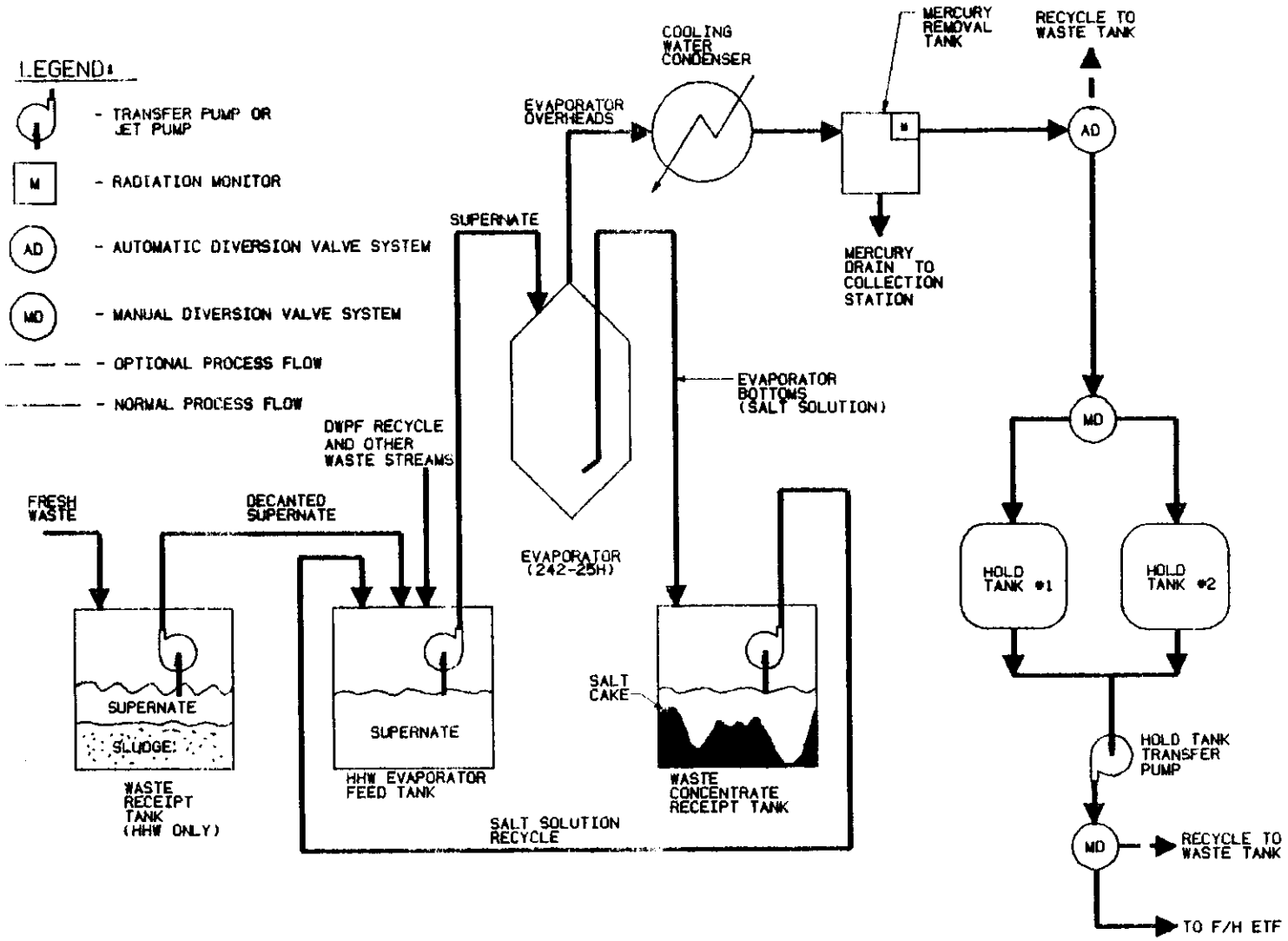

CAD NO.	TITLE	NO SCALE
SE5-2-2006186	FIGURE 4-3 REPLACEMENT HHW EVAPORATOR SYSTEM (242-25H) - PROCESS FLOW DIAGRAM	6000-44-3190W

generated annually. The process flow for the evaporator overheads is described in Section 4.4.1.

The desired concentration of dissolved solids (approximately 70% weight) is maintained in the evaporator pot by continuously withdrawing a portion of the concentrated waste (called evaporator bottoms or waste concentrate) from the evaporator and adding unconcentrated supernate to the evaporator. The waste concentrate is transferred to a waste concentrate receipt tank. As the hot waste cools, an immobile solid salt cake (primarily nitrate salts) forms and is deposited within the receipt tank. Any remaining supernate is decanted from the waste concentrate receipt tank and recycled to the evaporator feed tank. Over time and successive evaporation of the decantable liquids, the waste concentrate receipt tank fills with salt cake. When full, another waste tank is selected to become the waste concentrate receipt tank. The process flow for the waste concentrate is described in Section 4.4.2.

4.4.1 Evaporator Overheads Process Flow

The wastewater which is decanted from the evaporator feed tank is heated to its aqueous boiling point to form a vapor phase (called evaporator overheads). The rate at which the evaporator overheads are generated is dependent upon the heat transfer rate of the evaporator system, the dissolved solids content of the wastewater feed, and the dissolved solids content maintained within the evaporator pot (the evaporator operating temperature is dependent upon the dissolved solids concentration maintained in the evaporator pot). For the existing evaporators (242-F, 242-H, 242-16F, and 242-16H), an overheads flow rate up to 14 gallons per minute can be achieved. The 242-25H evaporator system is designed for a maximum overheads flow rate of 21 gallons per minute. Overall, the operation of the evaporator systems will be limited so that the total volume of evaporator overheads (including treated RBOF/RRF waste) will not exceed 29 million gallons per year as specified in the permit application form.

The vapor generated by the evaporator process is passed through a de-entrainer consisting of three bubble cap trays and a fine wire mesh above the bubble tray caps (the 242-H evaporator currently does not have the wire mesh).

The de-entrainer is used to limit the amount of water droplets (which may contain dissolved radionuclide salts) entrained with the vapor phase. The de-entrainer allows the de-entrained water to drip back into the evaporator pot. With improvements to the design of the wire mesh, the replacement evaporator (242-25H) and all future evaporator pots (i.e., replacements within the existing evaporator systems), will not contain bubble cap trays. The elimination of the bubble cap trays does not effect the overall performance of the evaporator.

The evaporated vapor is condensed within a water cooled condenser. The resulting condensate consists primarily of decontaminated water; however, some carryover of radionuclides from the de-entrainment process may occur. The condensate also contains mercury which, due to its low vapor pressure, is vaporized within the evaporator. To remove the mercury, the condensate is passed through a settling tank to reduce the flow velocity. The dense mercury droplets settle and accumulate at the bottom of this tank. Periodically, the mercury is manually drained from the bottom of the tank and placed into bottles. The recovered mercury is reused at the Separations Facilities. Currently, up to 15 gallons of mercury are recovered annually from the operation of all the existing evaporator systems. The amount of mercury recovered is expected to remain about the same after start-up of the replacement evaporator system.

Following mercury removal, the condensed overheads flow to the CRC pump tank where they are directed to CRC or to the Overhead Hold Tanks (CRC is optional and used only as needed). The overheads pass by a gamma monitor to measure the approximate radioactivity level. If the gamma monitor indicates that the radioactivity is too high, then the operator can recycle the overheads back to the evaporator feed tank. However, the gamma monitors have not functioned reliably and may be removed from service.

CESIUM REMOVAL COLUMNS

The CRC is an ion-exchange unit. Synthetic zeolite is currently used as the ion-exchange resin. Other ion exchange resins (i.e., Resorcinol/Formaldehyde Condensation Polymer) may be used in the future. The CRC for the 242-H evaporator system is also used to directly remove cesium from the RBOF/RRF waste stream. The CRCs are attached to the top of a nearby waste tank which allows the spent ion exchange resin to be dumped directly into a waste tank without exposing workers to potential radiation. Approximately 500 to 7000 bed volumes may be processed prior to having unacceptable radiocesium levels detected in the column effluent. This cesium decontamination process is used only when the Cs-137 content of the overheads is too high to send directly to the F/H ETF. The operation of the CRC may be eliminated completely on evaporator systems which produce overheads that have a suitable composition. The Tank Farm CRCs will be maintained for processing RBOF/RRF waste. Following the CRC, the evaporator overheads are directed to one of two hold tanks. The evaporator overheads can be diverted directly from the mercury removal tank to the hold tank (by-passing the CRC) by a manual diversion valve system.

The two hold tanks are used to temporarily hold the waste stream while conducting additional analyses for radioactivity. The tanks are paired to allow continuous operation of the evaporators. A manually operated diversion valve system is used to control which hold tank the overheads are transferred to. While one tank is being filled, the other tank is being sampled and emptied. It takes approximately 1-1/2 to 4 hours to fill a hold tank. The analytical results from the collected sample are used to determine the final disposition of the overheads. Overheads which have a suitable composition are sent to the F/H ETF for final treatment and discharge. All other overheads are recycled to a waste tank for reprocessing.

4.4.2 Waste Concentrate Process Flow

The evaporators are designed to provide a dissolved solids concentration of approximately 70 weight percent in the waste concentrate. The dissolved solids concentration of the supernate to the evaporator is approximately 30 weight percent. The concentration resulting from the evaporation process represents a volume reduction of approximately two-thirds.

An excessive amount of dissolved solids in the waste concentrate could cause crystallization of the salts within the evaporator and/or transfer lines. These crystallized salts could lead to total pluggage of the evaporator system. To prevent pluggage, the evaporator contents are carefully controlled to maintain the desired temperature and dissolved solids concentration. The operating temperature is dependent on the specific gravity of the liquid in the evaporator. The maximum temperature allowed in the evaporator is 150°C.

The waste concentrate is removed from the evaporator by a steam lift. The waste concentrate drawoff rate is controlled by varying the steam supply to the steam lift to maintain a liquid level at least six inches above the heater tube bundle. The feed rate is manually controlled by adjusting the evaporator feed pump discharge valve setting to maintain the desired specific gravity (approximately 1.40 to 1.60) in the evaporator pot. An increase in the feed rate causes a corresponding increase in the drawoff rate in order to maintain the proper liquid level. The control system on the replacement evaporator system (242-25H) will replace many of the manual controls on the old evaporators with an automatic system.

The boil-up rate is dependent upon the water content of the evaporator feed and the steam supply to the heater tube bundle. The heat transfer capacity of the heater tube bundle is designed to be the controlling factor in the operation of the evaporator. Deposits are periodically removed from the heater tube bundle in order to maintain the heat transfer efficiency. The deposits are removed by thermally flexing the tubes and washing with flush water.

The waste concentrate removed from the evaporator pot is transferred to a waste concentrate receipt tank by gravity flow whenever possible. When transfer distances and elevations prevent gravity flow, a waste Concentrate Transfer System (CTS) is installed to maintain the waste temperature and velocity at levels which will prevent salt crystallization and/or pluggage within the transfer system. A CTS has been installed for the 242-F and 242-H evaporator systems. A process flow diagram for both the gravity and CTS systems is shown as Figure 4-4.

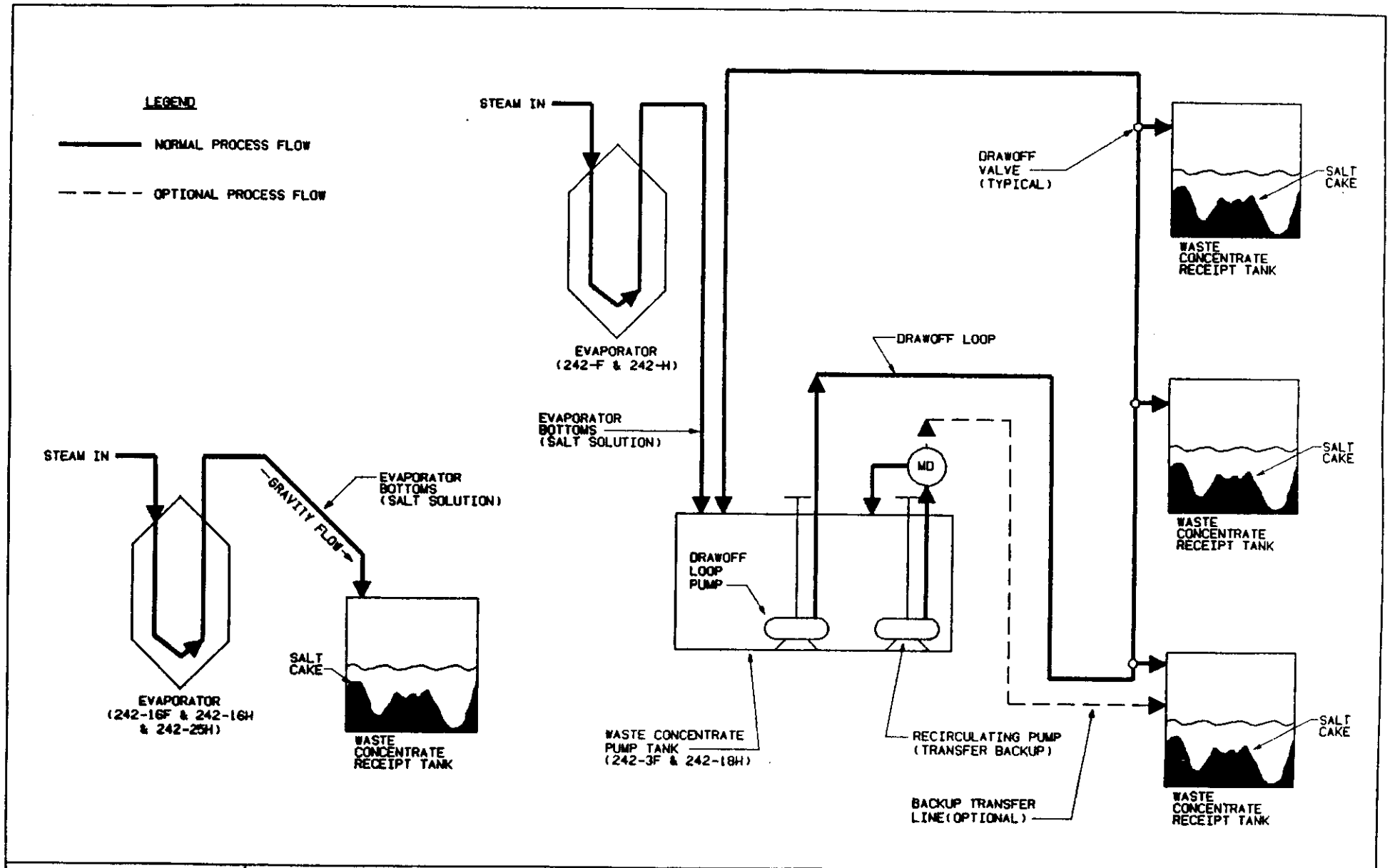

CAD NO.	TITLE	
SE5-2-2006186	FIGURE 4-4 WASTE CONCENTRATED-PROCESS FLOW DIAGRAM	NO SCALE 6000-44-3190W

When pumping is required, the hot waste concentrate flows by gravity into a pump tank for pumping through a concentrate drawoff loop. A portion of the recirculating waste concentrate is withdrawn at a selected waste concentrate receipt tank; the remaining portion is returned to the pump tank. To ensure satisfactory operations, each evaporator/CTS must be controlled to achieve equilibrium conditions for both heat transfer and fluid flow. The waste concentrate temperature in the pump tank and drawoff loop is monitored and controlled to prevent pluggage.

Each pump tank is equipped with a heating/cooling coil to maintain the desired temperature, an agitator to prevent the accumulation of solids, and an auxiliary (recirculating) pump to provide additional agitation. Should the primary drawoff pump fail, the recirculation pump can be used to empty the contents of the pump tank to a waste concentrate receipt tank via a dedicated line.

To avoid excessive cooling of the hot waste concentrate or settling of suspended solids within the transfer line, a minimum velocity of approximately two feet per second is maintained. (The slopes of the gravity transfer lines are large enough to maintain adequate velocities.) The drawoff pump is sized to maintain a flow rate in the drawoff loop (approximately 70 to 100 gpm) which is much larger than the maximum drawoff rate (approximately 8 to 15 gpm) at the waste concentrate receipt tank. To ensure that an adequate volume of liquid is maintained within the pump tank at all times, the drawoff valve leading to the waste tank is automatically opened and closed in response to two liquid level set points established within the pump tank. Approximately 100 to 300 gallons of waste concentrate is withdrawn from the drawoff loop during each interval.

Upon ceasing evaporator operations, the evaporator, CTS pump tank, and transfer lines (gravity or drawoff) are emptied and flushed with water to prevent pluggage. The flush water and accumulated residues are discharged into a waste concentrate receipt tank for subsequent removal and processing.

Even under carefully controlled operating conditions, pluggage can occur. Therefore, cleanout ports are provided along the waste concentrate gravity drain lines and drawoff loops. In the event of pluggage, a water catheter can be inserted into these cleanouts and forced through the transfer line to dissolve the salt deposits.

The waste concentrate is transferred to a waste concentrate receipt tank. Starting in 1981, the HHW and LHW evaporator bottoms have been segregated into separate waste concentrate receipt tanks. Prior to 1981, HHW and LHW evaporator bottoms were combined in the same waste concentrate receipt tank. The combined HHW/LHW is managed as a HHW.

The waste concentrate receipt tanks (both HHW and LHW) require supplemental cooling to remove the heat associated with the evaporator process and the increased generation of radioactive decay heat caused by concentrating the radioactive salts. As the hot evaporator bottoms cool, a solid salt cake forms (primarily sodium nitrate) and is deposited within the waste concentrate receipt tank. Any liquid supernate that remains within the waste concentrate receipt tank is decanted and recycled to the evaporator feed tank for further processing. Over time and successive evaporation of decantable liquids, the waste concentrate receipt tank becomes filled with salt cake. Since the salt cake is a solid form, the mobility of the waste

constituents is greatly reduced.

The waste concentrate receipt tanks are not completely filled with salt cake to ensure that sufficient capacity is available for the addition of fresh water to dissolve the salt cake. A liquid layer is maintained within the tank to improve heat transfer by keeping the salt cake moist. Approximately 300,000 gallons of freeboard is maintained in Type II and III/IIIA waste tanks for the liquid supernate layer.

Upon proper aging for radioactive decay, the salt cake is dissolved and processed through the ITP process (see Section 4.5).

4.4.3 Process Equipment Descriptions

The design and operation of the existing evaporator systems (242-F, 242-H, 242-16F, and 242-16H) are very similar. The design of the replacement evaporator system was upgraded to incorporate improvements based upon 30 years of operating experience. The various design and equipment differences are described in Sections 4.4.3.1 (Existing Evaporator Systems) and 4.4.3.2 (Replacement Evaporator System).

4.4.3.1 Existing Evaporator Systems

A general description for each major piece of process equipment is provided below. The function of each piece of process equipment is identical; however, some of the process equipment dimensions and capacities are different. These differences are identified below and in the summary specifications for the process

equipment provided in Section 7.1.1.

Evaporators

Each evaporator is fabricated from Type 304L stainless steel and operates near atmospheric pressure under alkaline conditions. The 242-F, 242-16F and 242-16H evaporators are 8 feet in diameter and about 16.5 feet tall, and have an operating capacity of approximately 1800 gallons. The 242-H evaporator is 8 feet in diameter, about 15 feet in height, and also has an operating capacity of approximately 1800 gallons. Figure 4-5 provides a diagram of a typical evaporator. The evaporator contains the following items:

- **Heater Tube Bundle**: The heating unit is a bundle of bent tubes which are configured to easily remove scale by thermal flexing. Flush water is also added to the evaporator pot to dissolve and remove accumulated salts or scale from the outer surface of the heater tube bundle. The heating media is steam at approximately 150 psig.

- **Steam Lift**: Two steam lifts are provided to remove the waste concentrate. The inlet of the steam lifts are placed at the apex of the conical bottom. The conical design along with the suction provided by the steam lift, sweeps any settled solids out of the evaporator bottom.

- **De-entrainer**: The de-entrainer consists of three trays containing bubble caps. The de-entrainer is installed within the vapor space of the evaporator and is welded to the dished evaporator head. Evaporators 242-F, 242-16F and 242-16H have wire mesh separator pads placed above the bubble cap trays to improve de-entrainment. As previously stated, the de-entrainer will be eliminated from the future evaporators which will replace the existing units. The future evaporators will be equipped with a mist eliminator to remove entrained water droplets.

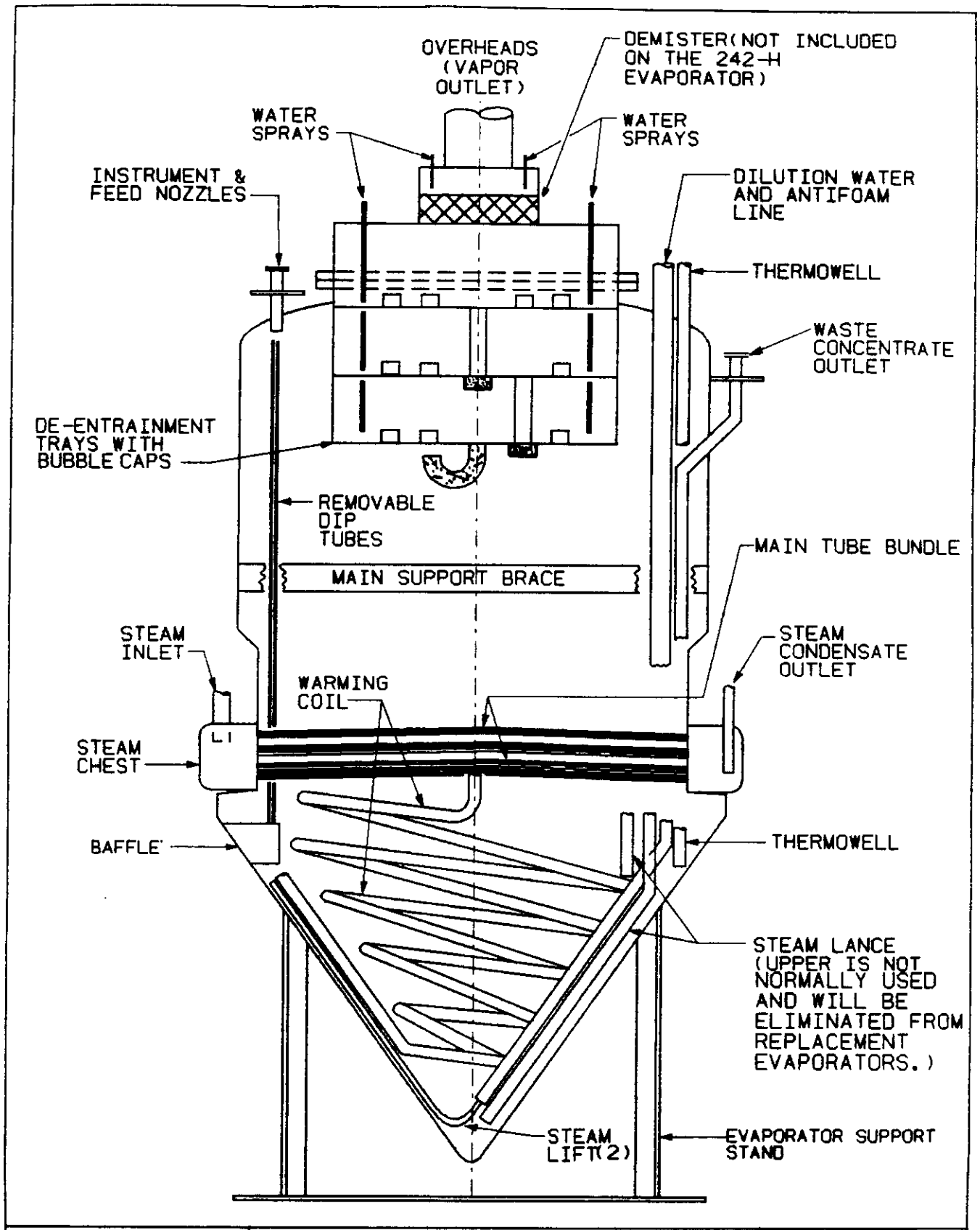

CAD NO.	FIGURE 4-5	NO SCALE
SE5-2-2006188	TYPICAL EVAPORATOR VESSEL	6000-44-3190W

- **Warming Coil**: A warming coil is located in the cone section to assist with dissolution activities in the event of salt crystallization within the evaporator.

- **Steam Lances**: Two steam lances are provided to agitate and to assist with dissolution activities in the event of salt crystallization. One lance is located just below the tube bundle and the other is located at the cone apex. The upper lance is not normally used and is blanked off on all existing evaporators. The upper lance will be eliminated from replacement evaporators which are installed in the future. The apex lance is operated continuously to agitate the evaporator contents, and to minimize sedimentation and salt deposition.

Condenser

The evaporator overheads are condensed in a standard tube and shell heat exchanger. The evaporator overheads flow within the tubes and the cooling water flows on the shell side. The condenser is normally maintained by direct contact (i.e., employee physical contact with the piece of equipment using standard radiation protection precautions) since the overheads contain a limited amount of radionuclides. However, the condensers are shielded in the event of a process upset which could cause excessive carry-over of radionuclides. Figure 4-6 provides a diagram of a typical condenser.

Mercury Removal Tank

The mercury removal tanks are fabricated from 304L stainless steel. The mercury removal tanks for the 242-F and 242-16F have an approximate capacity of 100 gallons. The mercury removal tanks for the 242-H and

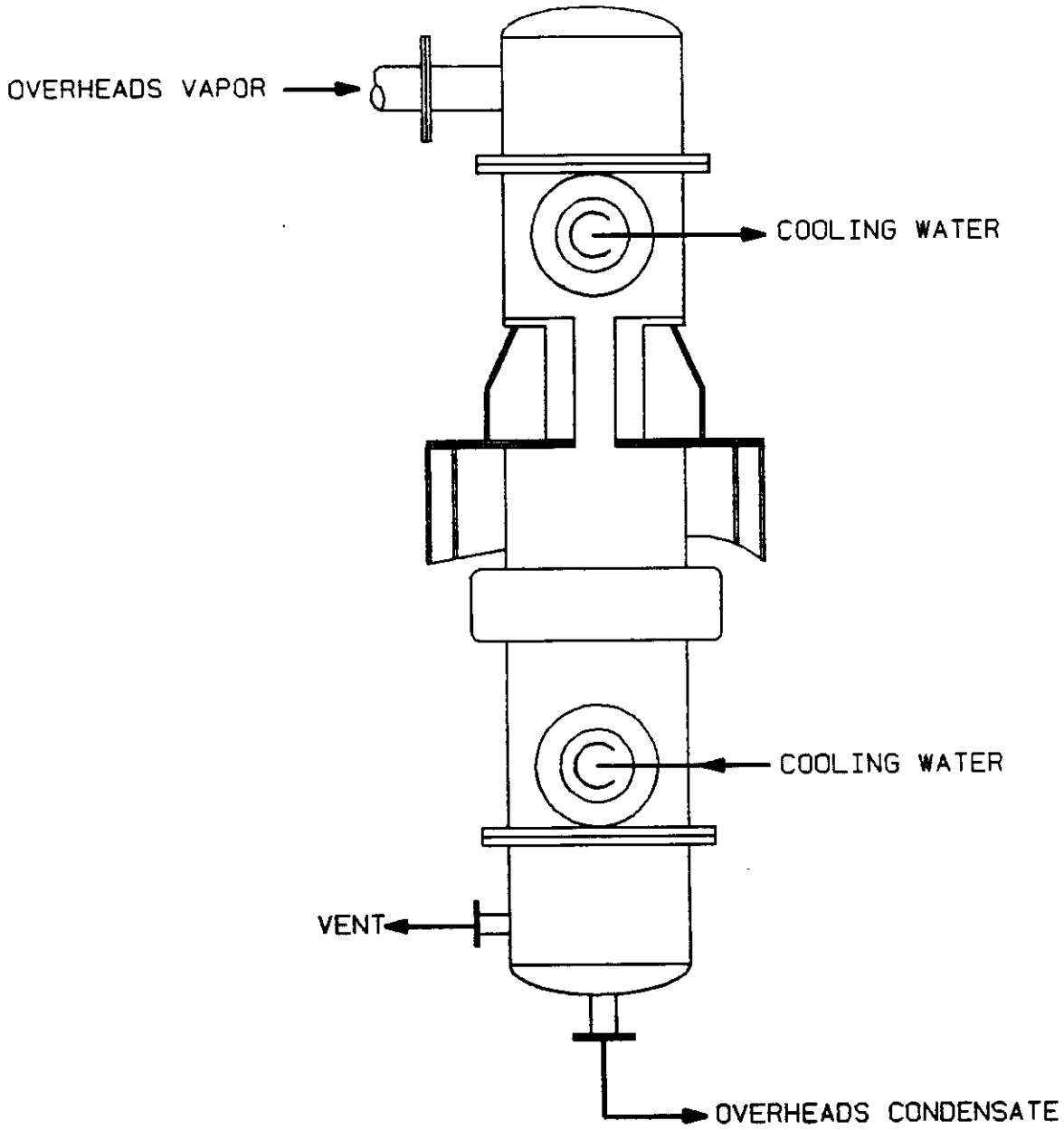

CAD NO. W2020335	FIGURE 4-6 TYPICAL OVERHEADS CONDENSER	NO SCALE 6000-44-3190W

242-16H are larger due to the use of mercury in the H-Area Separations Facility. These tanks have an approximate capacity of 160 gallons. The accumulated mercury is removed from the tank through a manually operated drain valve located at the bottom of the tank. Figure 4-7 provides a diagram of a typical mercury removal tank.

CRC Pump Tank

The CRC pump tanks are fabricated from 304L stainless steel and have an approximate capacity of 30 to 35 gallons. Figure 4-8 is a diagram of a typical CRC pump tank.

Two parallel transfer pumps are used to transfer the evaporator overheads from the pump tank to the CRC. One pump is operated while the other is on standby in case of primary pump failure. The constant speed pumps for the 242-F, 242-16F and 242-16H evaporator systems are controlled by high and low liquid level set points established within the pump tank. The liquid level in the pump tank for the 242-H evaporator system is maintained by a variable speed pump. The level in this pump tank is kept constant by manual adjustment of a valve between the pump tank and the pump. The 242-H evaporator pump tank cycles between a high point and a low point in the pump tank because there is no automatic control to adjust the speed of the variable speed pump. Generally the 242-H evaporator operates with a pump tank about 25-30% full because the pump runs at a speed that closely matches

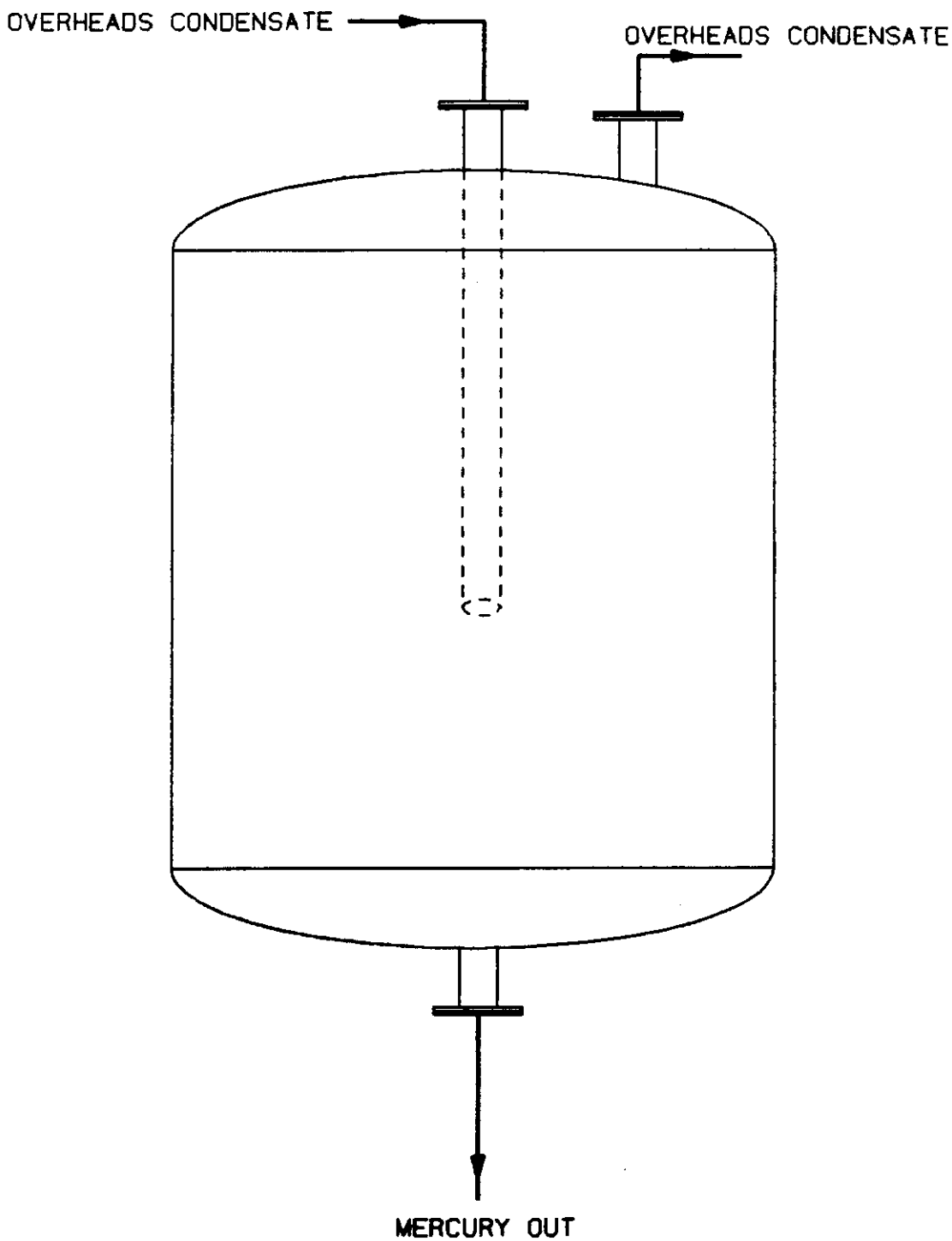

CAD NO.	FIGURE 4-7	NO SCALE
W2020335	TYPICAL MERCURY REMOVAL TANK	6000-44-3190W

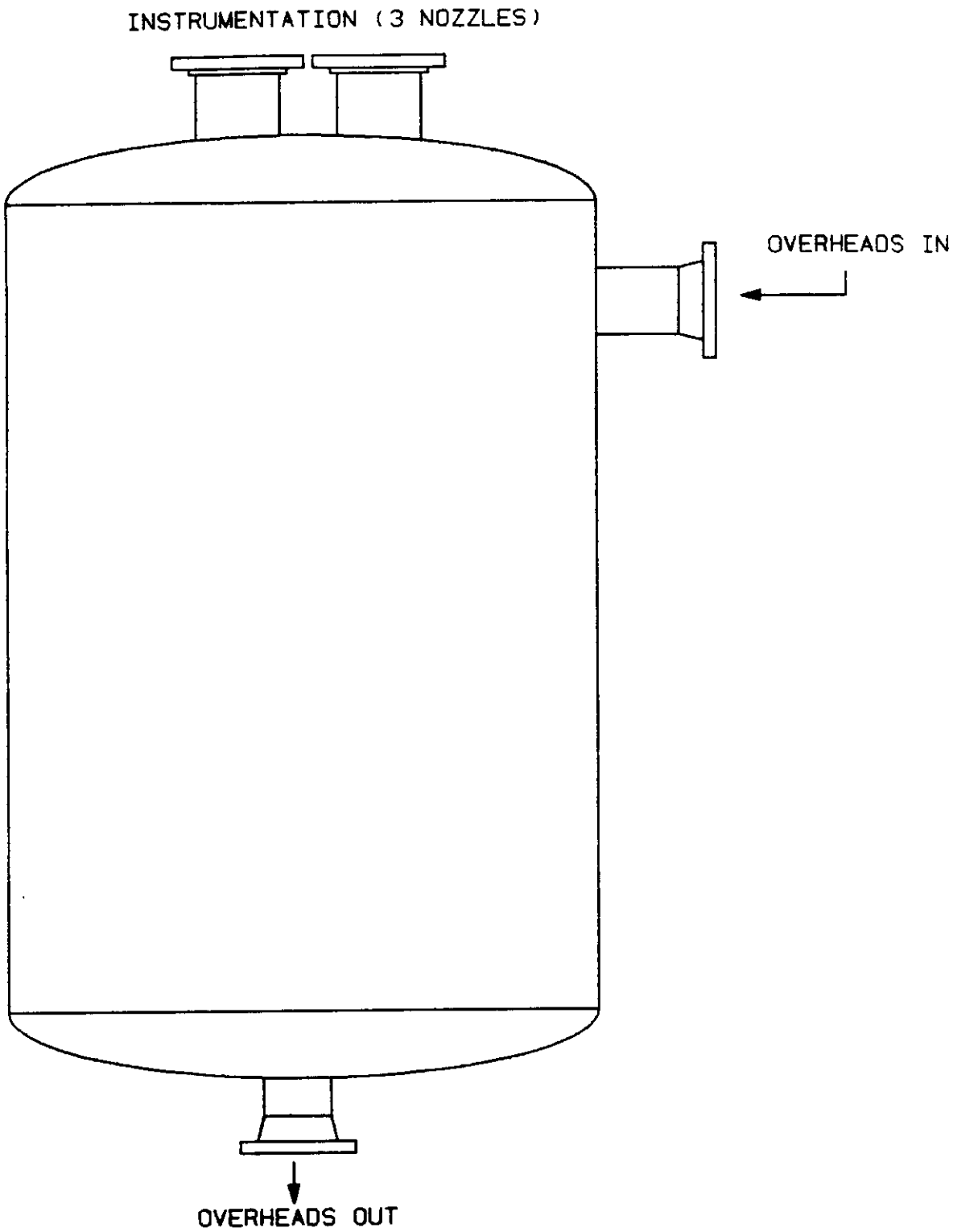

CAD NO. W2020335	FIGURE 4-8 CRC PUMP TANK	NO SCALE 6000-44-3190W

the rate of overheads production. A description of these pumps is provided in Section 7.6.1.1.

Cesium Removal Column

The CRCs are fabricated from 304L stainless steel. The CRCs for the 242-F, 242-16F and 242-16H evaporator systems can hold up to 10 cubic feet of ion exchange resin. The CRC for the 242-H evaporator system has a capacity of 20 cubic feet to accommodate the direct processing of the RBOF/RRF waste stream. The ion exchange resin is supported by a conical perforated metal screen and is primarily used to remove cesium. Figure 4-9 presents a diagram of a typical CRC.

Overhead Hold Tanks

Each evaporator system has two overhead hold tanks which are fabricated from 304L stainless steel. The hold tanks for the 242-F, 242-H, 242-16F and 242-16H evaporator systems each have an approximate capacity of 1000 gallons, 1500 gallons, 1300 gallons, and 900 gallons, respectively. Each hold tank is used to temporarily retain the evaporator overheads while samples are being analyzed. Figure 4-10 provides a diagram of a typical overhead hold tank.

The 242-F, 242-16F and 242-16H evaporator systems have two parallel (one operating and one standby) transfer pumps to transfer the evaporator overheads to F/H ETF for final treatment or to a waste tank for reprocessing. The overheads from the 242-H hold tanks are gravity drained to the F/H ETF, or pumped to Tank

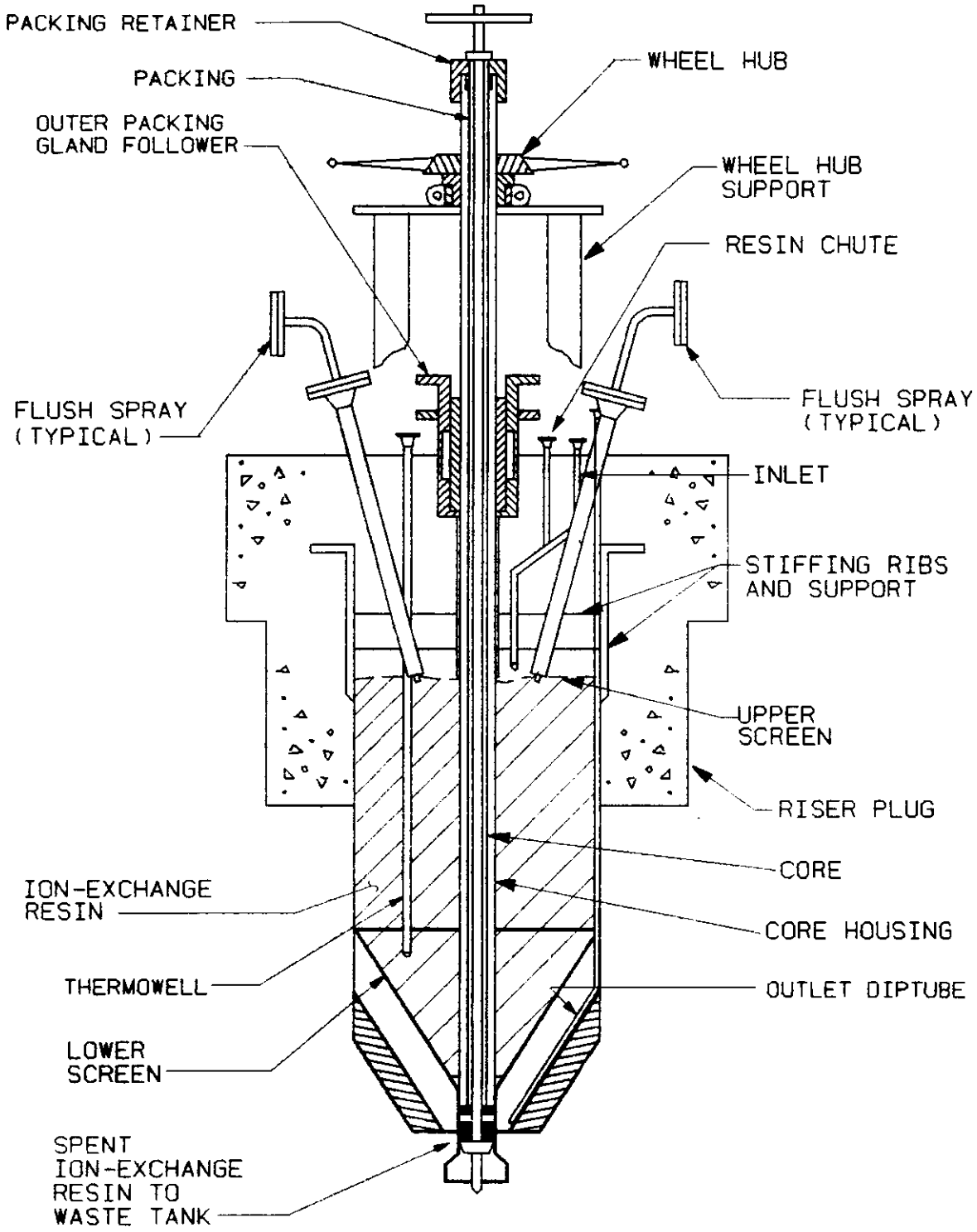

CAD NO.	FIGURE 4-9	NO SCALE
W2020335	TYPICAL CESIUM REMOVAL COLUMN	6000-44-3190W

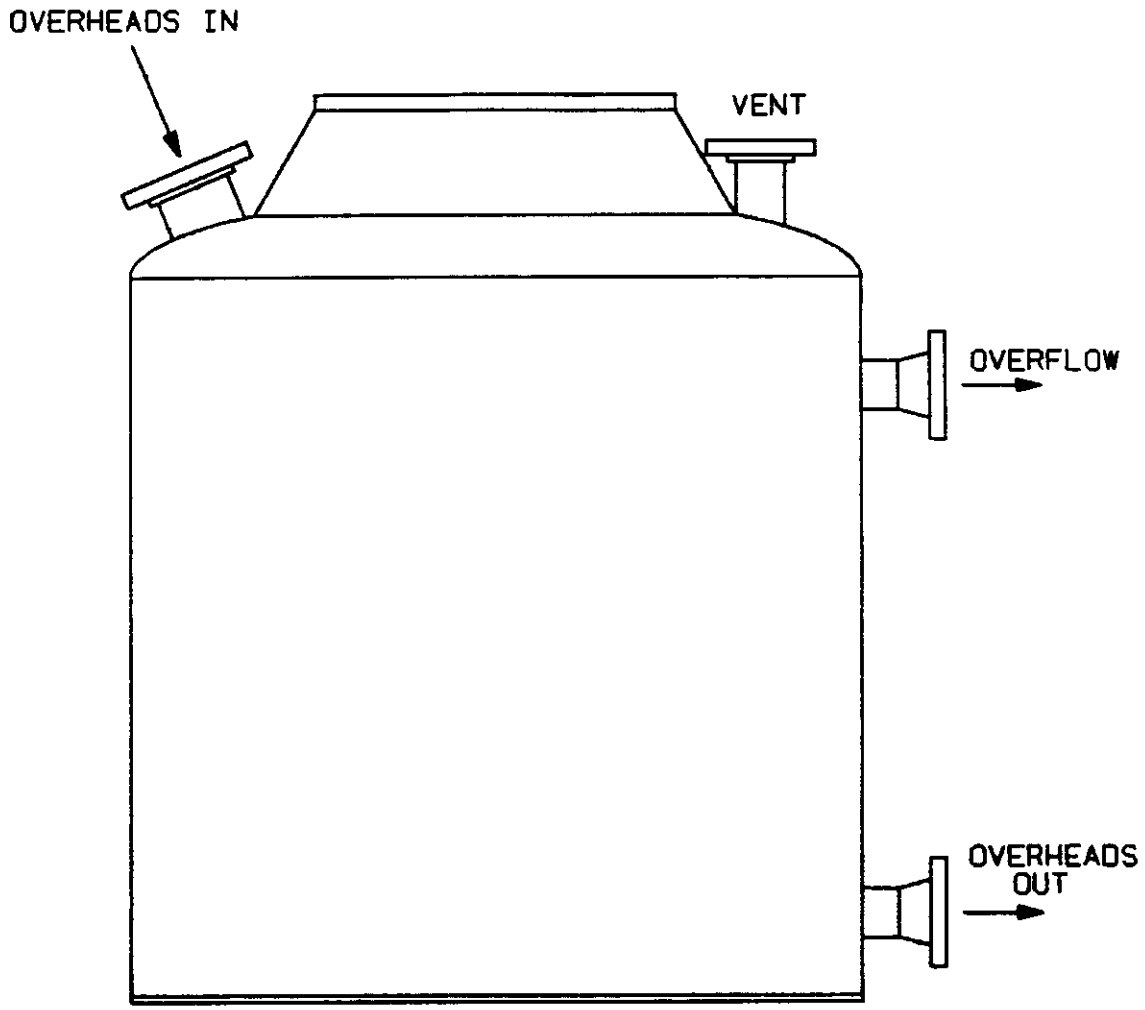

CAD NO.	FIGURE 4-10	NO SCALE
W2020335	TYPICAL OVERHEADS TANK	6000-44-3190W

23. A description of these pumps is provided in Section 7.6.1.1.

Waste Concentrate Pump Tank

The 242-F and 242-H evaporator systems have a CTS to transfer the waste concentrate to a waste concentrate receipt tank. Each CTS (242-3F and 242-18H) has a pump tank. The CTS pump tanks are fabricated from 304L stainless steel. The capacity of the F-CTS pump tank is approximately 3000 gallons. The H-CTS pump tank has an approximate capacity of 2600 gallons. Figure 4-11A presents a cross-sectional diagram of a typical Waste Concentrate Pump Tank. Figure 4-11B provides top view of a typical Waste Concentrate Pump Tank.

Each pump tank is equipped with two transfer pumps. One transfer pump (drawoff pump) is used to recirculate the waste concentrate through the drawoff loop. The other pump (recirculation pump) is used to mix the pump tank contents and to empty the tank in the event of drawoff pump failure. A description of these pumps is provided in Section 7.6.1.1. The tanks also contain an agitator to keep solids in suspension.

The pump tank is also equipped with a heating/cooling coil to maintain the waste concentrate at the desired temperature. The heating media is steam at approximately 150 psig. The cooling media is well water.

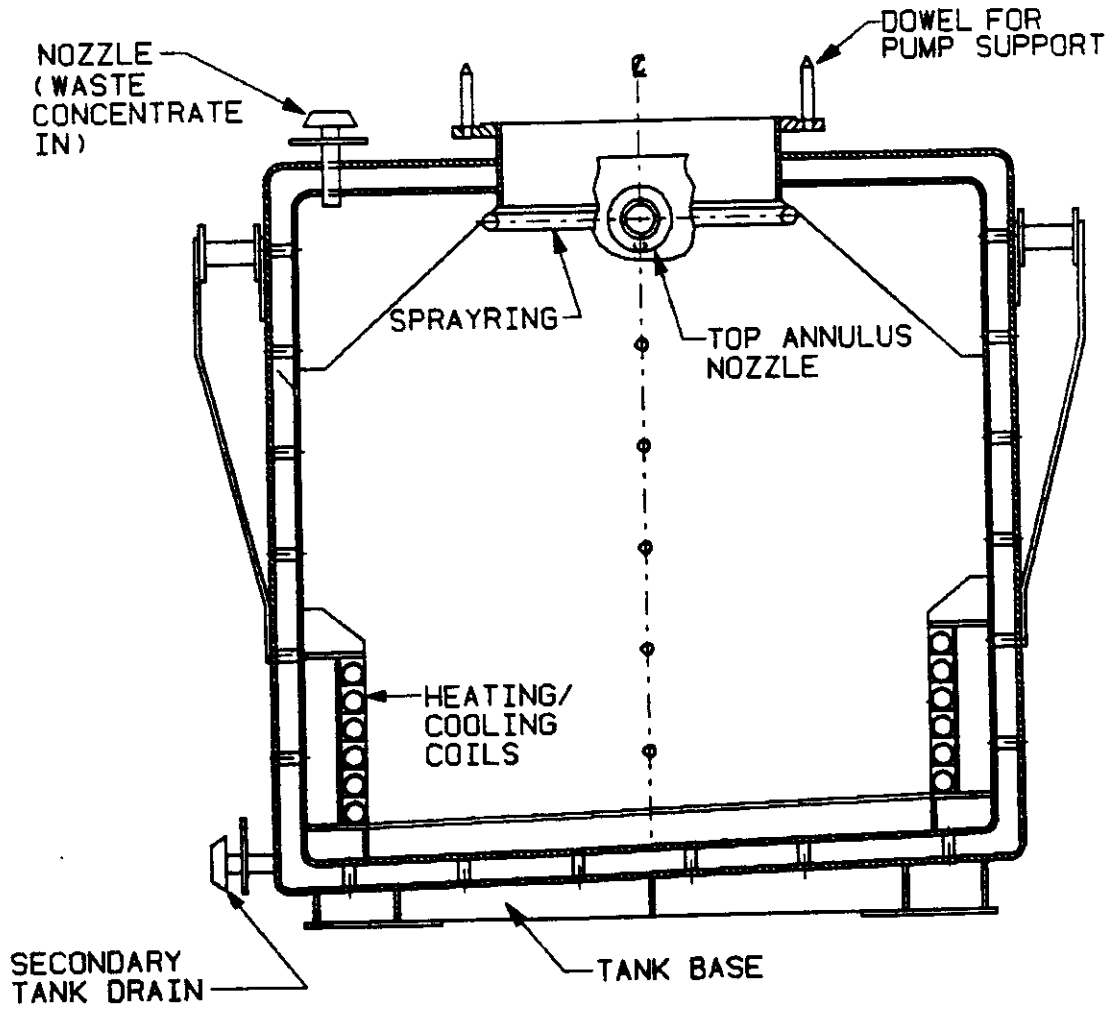

NOTE:

1. DRAWOFF AND RECIRCULATION PUMPS NOT SHOWN.

CAD NO.	FIGURE 4-11A	NO SCALE
W2020335	TYPICAL WASTE CONCENTRATE PUMP TANK(CTS) CROSS SECTION	6000-44-3190W

Secondary Containment/Shielding

In the event of a spill, operators will be alerted to take corrective measures (i.e., stop process operations, isolate and repair the leak, and clean-up and decontaminate process equipment).

Because of the radioactivity emitted from the waste, the evaporator systems are either shielded (i.e., lead, steel, or concrete vaults) and/or placed underground. The shielding for the 242-H evaporator system is more extensive, since this evaporator system is used to process HHW. The process equipment is designed to be operated and maintained remotely.

Additional details regarding the secondary containment system for the existing evaporator systems are presented in Appendix C.

4.4.3.2 Replacement Evaporator System (Under Construction)

The replacement evaporator system (242-25H) is to replace the existing HHW evaporator system (242-H). The 242-H evaporator system will be removed from service prior to start-up of the replacement evaporator.

The 242-F evaporator system will be operated as necessary to maintain adequate capacity within the waste tanks. The combined operation of the existing and replacement evaporator systems, including treated RBOF/RRF wastewater, will not exceed 29 million gallons per year.

The replacement evaporator system will be contained in a reinforced concrete building located adjacent to Tanks 31 and 35 as shown on Figure 2-7. Physical construction of the facility is to begin during the middle of 1991 with operations commencing in 1994. Construction of the replacement evaporator will be initiated under the existing Part A RCRA Permit and will continue under the provisions identified in this permit application upon issuance of a SCDHEC Wastewater Treatment Permit.

A process flow diagram for the replacement evaporator system is provided as Figure 4-3. The process flow is similar to the existing 242-H evaporator systems with the following exceptions:

- The radiation monitor is being moved from an in-line position to the mercury removal tank,

- The CRC and pump tank are being eliminated.

In addition to these process changes, the HHW evaporator feed tank will be switched from Tank 13 to Tank 32 to allow Tank 13 to be taken out of service. Each of the above listed modifications are described in further detail below. The specifications for the process equipment is summarized in Section 7.1.2.

Evaporator

Design improvements were incorporated for the replacement evaporator. The evaporator will be fabricated from 304L stainless steel and will operate

near atmospheric pressure under alkaline conditions. The evaporator vessel is about 14 feet in diameter and 27 feet tall and has an operating capacity of approximately 3000 gallons. The replacement evaporator contains the following items which are modifications to the existing evaporator designs:

- **Heater Tube Bundle**: The heating unit is a bundle of bent tubes. The replacement evaporator will have tubes made of 14 gauge Hastalloy G3 or G30. The tubes will be about 12 feet in length and have an outside diameter of 3/4-inch. The tube bundle is configured to allow removal of scale by thermally flexing the tubes. The heating media is steam at approximately 150 psig. The maximum temperature allowed in the evaporator exceeds 150°C.

- **Steam Lift**: No changes.

- **De-entrainer**: The de-entrainer trays are being eliminated because of the improvements made to the demister.

- **Demister**: The demister is a wire mesh pad similar to the ones on the existing evaporators; however, the new demister has an improved de-entrainment efficiency. Due to the improvements to the demister, the CRC will be eliminated.

- **Warming Coil**: No changes.

- **Steam Lances**: Upper lance is being eliminated on the new evaporators.

<u>Condenser</u>

Like the existing condensers, the replacement condenser will be a standard tube and shell condenser. The replacement condenser is larger to handle the increased capacity. The tubes and shell will be fabricated from 304L stainless steel and carbon steel, respectively.

Mercury Removal Tank

The mercury removal tank is also larger to accommodate the increased process flow. The tank will have an approximate capacity of 250 gallons.

Generally, the radiation monitor for the existing evaporator system is currently placed in-line after the CRC pump tank and pump. This radiation monitor was relocated for the replacement evaporator system so that it is contained within the mercury removal tank. The internal placement of the radiation monitor improves the sensitivity of the measurements by eliminating potential interferences resulting from background radiation levels and providing a configuration which allows the monitor to be calibrated more easily.

With the increase sensitivity of the radiation measurements, the manual diversion valve system is being replaced with an interlocked diversion valve system. The interlocked valve system will be activated by the radiation monitor and used to divert overheads with excessive radioactivity to a waste tank for reprocessing. This system will allow improved process control for the evaporator overheads.

CRC Pump Tank and CRC

With the design improvements made to the demister, the CRC unit will be eliminated. The demister alone will limit the carry-over of radionuclides to acceptable levels.

Overheads Hold Tanks

The hold tanks for the evaporator overheads will also have a larger capacity to accommodate the increased flow rates. The two tanks will be fabricated from 304L stainless steel and have a capacity of approximately 2800 gallons each. Two parallel (one operating and one standby) transfer pumps are being provided to transfer the evaporator overheads to the F/H ETF for final treatment or to a waste tank for reprocessing. A description of these pumps is provided in Section 7.6.1.1.

Final design for the transfer line connected between the overheads tank and the existing F/H ETF process sewer header is not completed at this time. Details regarding this transfer line will be addressed at a later date as a modification to the existing SCDHEC Permit #13105 issued for the F/H ETF process sewer.

Waste Concentrate Transfer

The waste concentrate will be removed from the evaporator by a steam lift and flow by gravity to the waste concentrate receipt tanks (Tanks 29, 30, 31, 35, and 37). Since flow will be by gravity, a waste concentrate pump tank will not be provided. Flush water connections are also being provided so that the evaporator and lines can be flushed.

Secondary Containment/Shielding

Like the existing evaporator systems, the process equipment will be installed within a reinforced concrete structure. Stainless steel liners will be used to protect concrete, which could be exposed to HLW, from permeation of radionuclides and attack of decontamination chemicals. Additional curbing will be provided around the evaporator cell to increase the secondary containment capacity.

4.4.3.3 Spare Evaporator Systems

The failure rate of the four existing evaporators varies from two to ten years. The loss of one unit for an extended period of time could seriously hinder waste processing. A spare bent tube evaporator vessel with a Hastelloy G-3 warming coil is kept on site to replace disfunctional 242-16 F/H or 242-F/H systems. A new spare evaporator vessel is also in the design phase, so that a spare will be available when the existing spare vessel is put into service. This new evaporator vessel will also have the capability of substituting for any of the four existing systems. When the new spare evaporator vessel equipment arrives on site, it will be mocked-up, insulated, and covered with a stainless steel skin by SRS in Building 717-F and then transported to storage until needed.

Improvements found on the new spare evaporator vessel include:

- improved de-entrainment design

- the use of Hastelloy G-30 for the heater tube bundle and warming coil.

- Elimination of the upper stream lance.

Both of the spare evaporator vessels consist of 304L stainless steel. Specifications for the spare evaporator vessels are shown in Section 7.1.3.

4.5 Salt Cake Processing

The influent waste streams contain soluble radionuclides and process chemicals which cannot be discharged to the environment. These soluble salts are removed from the waste streams by evaporators and are transferred to a waste concentrate receipt tank for accumulation. Some of the radionuclide salts have a sufficiently long half-life (i.e., greater than three years) and are present at concentrations which pose a long-term threat of radiation exposure if mismanaged; therefore, these radionuclides require long-term isolation. To convert the radioactive salts into a waste form that is suitable to long-term isolation, the salt cake is subjected to a secondary treatment process known as In-Tank Precipitation (ITP).

In general, salt solution from the waste tanks is transferred to the ITP reaction tank (Tank 48) for batch processing. The salt solution may originate from various sources including dissolved salt cake, saturated supernate decanted from the salt cake tanks, and some process waste streams. Process feed chemicals (i.e., sodium tetraphenylborate and sodium titanate) are added to the salt solution to precipitate and/or adsorb the radioactive salts (i.e., cesium-137, strontium-90, and all

isotopes of plutonium). Other salts (i.e., non-radioactive potassium salts), which are not specifically targeted for precipitation/adsorption, are also precipitated/adsorbed by the process feed chemicals. The resulting reacted solution is filtered to separate the precipitate slurry from the salt solution.

The decontaminated salt solution (filtrate) is passed through a stripper column to remove organics prior to being transferred to Tank 50 (SCDHEC Industrial Wastewater Permit #14520). The decontaminated salt solution is combined with the waste concentrate from the F/H ETF in Tank 50. The combined waste stream is transferred to the Z-Area SMDF and solidified with a fly ash/slag/cement matrix (SCDHEC Industrial Wastewater Permit #12683) for on-site disposal in concrete vaults (SCDHEC Solid Waste Permit #IWP-217). Up to 13 million gallons of decontaminated salt solution is generated annually.

The precipitate slurry, which contains the majority of the radioactivity, is transferred to the DWPF Vitrification Facility for incorporation into borosilicate glass for long-term isolation at an offsite disposal facility. Up to 800,000 gallons of washed precipitate slurry is generated annually.

4.5.1 Process Flow

An overall process flow diagram for the salt cake processing is shown as Figure 4-12. The individual steps of this treatment process include:

- Salt cake aging,
- Salt cake removal/blending,
- Precipitate reaction,
- Precipitate concentration,
- Precipitate slurry washing, and
- Washed precipitate slurry transfer.

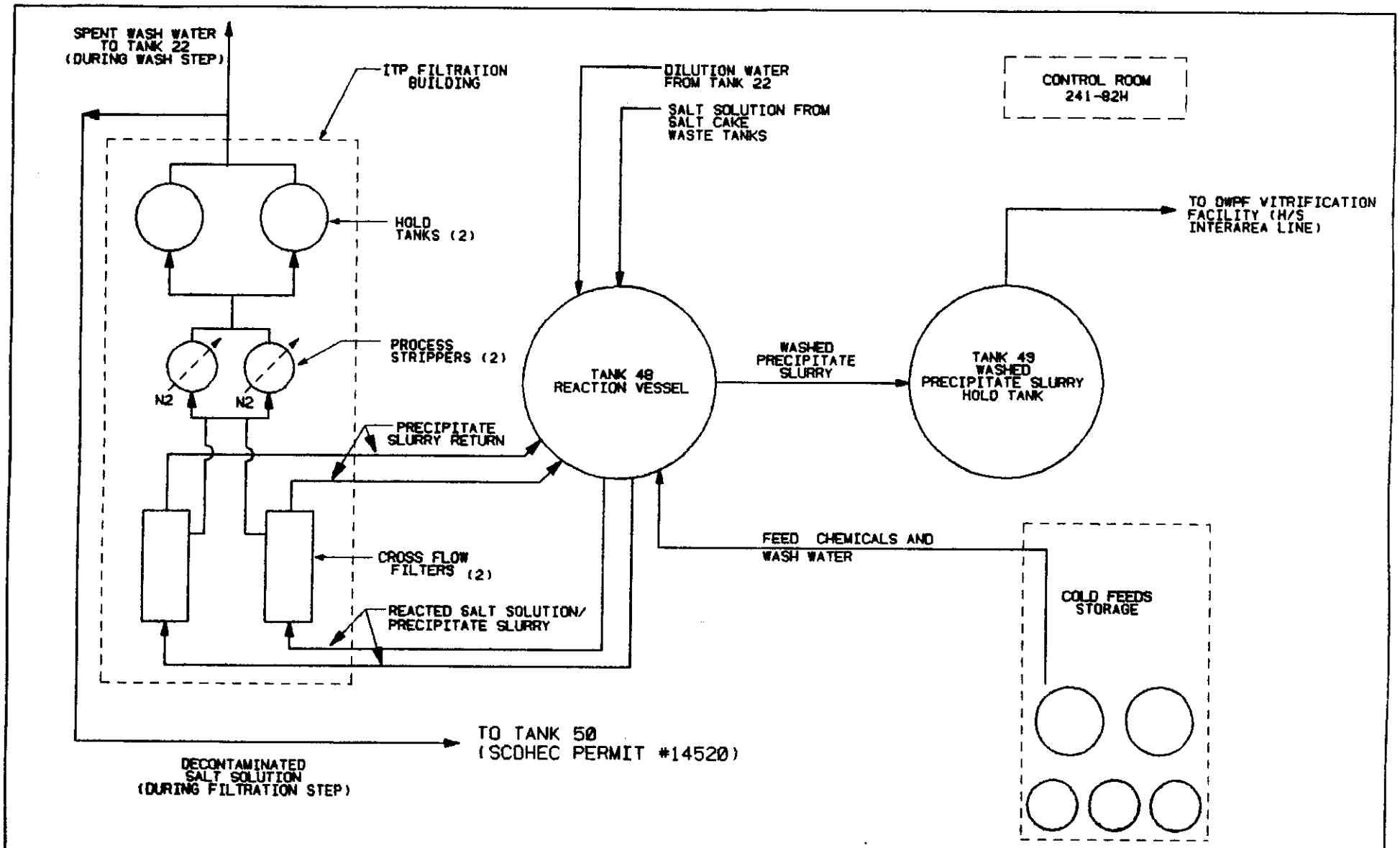

CAD NO.	TITLE:	NO SCALE
SE5-2-2006185	FIGURE 4-12 SALT CAKE PROCESSING - PROCESS FLOW DIAGRAM	6000-44-3190W

Each of these processing steps are described in the subsections that follow.

4.5.1.1 Salt Cake Aging

The two process feed chemicals used during the precipitate reaction step react with the cesium, strontium, plutonium, and potassium salts to form a precipitate. Through filtration of the precipitate slurry, the main radionuclide hazards (i.e., Cs-137, Sr-90, and all Pu isotopes) are removed from the salt solution. However, some radionuclides (i.e., ruthenium - 106) are highly soluble and are not reactive. Therefore, the radioactive ruthenium is not removed and remains in solution.

The only technology currently available for limiting the concentration of Ru-106 is aging to permit radioactive decay. The Ru-106 has a half-life of one year which is a short half-life compared to the other radionuclides in the salt cake (Cs-137, Sr-90 and all Pu isotopes). The required aging period is dependent upon the source of the salt cake. These aging periods range from zero for some of the LHW to approximately 12 years for the HHW salt cake. The actual aging period is determined by maintaining inventory records of the type and quantity of waste sent to each tank. Waste samples are also collected and analyzed during salt removal operations to verify the inventory records.

4.5.1.2 Salt Cake Removal/Blending

After aging, the salt cake is dissolved to allow transfer to the ITP reaction tank (Tank 48) for processing. Spent wash water from the sludge processing operations contained in Tank 21 and/or inhibited water is used to dissolve the salt cake. Two to four long-shaft depth adjustable slurry pumps (see Section 7.6.3) are installed within each salt cake tank to expedite dissolution of the salt cake. The slurry pumps are also used to mix the contents of the waste tank and to keep insoluble solids in suspension. A telescoping transfer jet (see Section 7.6.2.2) is also installed within the salt cake tank to transfer the dissolved salt cake (called salt solution) to Tank 48. The variable depth nature of the slurry pumps and transfer jet allows the pump intakes to be lowered as the salt cake is removed.

Approximately two gallons of water is required to dissolve each gallon of salt cake. Since the salt cake can occupy up to 80% of the waste tank volume, repeated transfer/refill/dissolution cycles are required to completely remove all accumulated salt cake. The calculated minimum number of transfer/refill/dissolution cycles to empty a full salt cake tank (1,300,000 gallon capacity) is five. The logic associated with this calculated number is illustrated in Table 4-1. The removal process for this full salt cake tank is described below.

TABLE 4-1

MINIMUM PREDICTED TRANSFER/REFILL/DISSOLUTION CYCLES TO EMPTY A FULL SALT CAKE TANK[a]

Transfer/Refill Cycle Number	Volume of Water Added (Gallons)	Volume of Salt Cake Dissolved (Gallons)	Volume of Salt Cake Remaining After Transfer (Gallons)
1[b]	0	0	1,000,000
2	300,000	150,000	850,000
3	450,000	225,000	625,000
4	675,000	337,500	287,500
5	575,000	287,500	0

Notes:

[a] The values provided in this table are the calculated minimum number of transfer/refill/dissolution cycles to empty a full salt cake tank with a capacity of 1,300,000 gallons (Type II or III/IIIA waste tanks). These salt cake tanks are normally filled with approximately 1,000,000 gallons of salt cake and up to 300,000 gallons of saturated supernate.

[b] The first transfer is to remove the existing inventory of supernate (up to 300,000 gallons).

The salt cake removal process begins after the slurry pumps and transfer jet are installed. The first cycle involves the removal of the existing liquid supernate inventory (approximately 300,000 gallons) which sits on top of the salt cake. No salt cake is dissolved during the first transfer since the supernate is close to its saturation limit and no fresh water can be added to the full salt cake tank. After the salt solution from the first transfer is transferred to the ITP facility, approximately 300,000 gallons of fresh water (i.e., spent sludge processing wash water or inhibited water) is added to refill the salt cake tank. The slurry pumps are turned on to agitate the tank contents to prevent a boundary layer of saturated salt from forming at the salt cake surface. Several weeks are required to allow the salt solution to become saturated. Approximately 150,000 gallons of salt cake is dissolved during the first refill cycle. The resulting salt solution (approximately 450,000 gallons) is transferred to Tank 48. The transfer of the salt solution is dependent upon the availability of space within Tank 48; therefore, transfers may not occur immediately. Normally, transfers occur every four months.

The transfer/refill/dissolution cycle is repeated until all of the salt cake is removed from the waste tank. Approximately 20 months is usually required to empty a full salt cake tank. The longest scheduled time period for emptying a salt cake tank is 8 cycles or approximately 32 months. The shortest scheduled time period is approximately 4 months for the initial

start-up of the ITP process. The actual time periods will be dependent upon the conditions encountered during the ITP process operations and the amount of blending required to provide a proper feed mix for the DWPF Vitrification Facility and Z-Area SMDF.

The salt solution is processed in large batches at the ITP facility. Each batch consists of approximately 600,000 gallons of salt solution. The processing of the salt solution in large batches is required to accommodate the radioactive decay time for Ru-106.

Salt cake is removed from several different waste tanks simultaneously and combined within Tank 48 to obtain an adequate sized batch with homogenous properties. This blending procedure is primarily used to mix aged salt cake with salt cake which has not been fully aged to reduce the Ru-106 concentration to acceptable levels. The blending of very old salt cake with salt cake not fully aged can only reduce the aging period by approximately two years.

A master schedule for the removal of salt cake from the waste tanks was developed to ensure that the Ru-106 concentration of the blended salt solution falls below the Z-Area SMDF acceptance limit. The removal/blending schedule is also designed to maintain a consistent chemical/radioactive composition for the precipitate slurry which is transferred to the DWPF Vitrification Facility. This homogeneous waste feed to the DWPF Vitrification Facility produces a final

waste product (borosilicate glass) within a narrower QA/QC range. This narrower range is desirable for long-term isolation of the radioactive wastes.

4.5.1.3 Precipitate Reaction Step

A process flow diagram for the precipitate reaction step is shown as Figure 4-13. Radioactive salt solution (including dissolved salt cake, saturated supernate, and other process waste streams) is transferred from other waste tanks to the reaction vessel (Tank 48) in batches (approximately 600,000 gallons). Each reaction cycle consists of up to three 600,000 gallon batches of salt solution. Spent wash water from Tank 22 is added to Tank 48 as process water to ensure that the sodium ion concentration is within operating limits (approximately 5.5 molar).

Process feed chemicals are added to the salt solution to specifically convert a majority of the soluble radionuclides (i.e., Cs-137, Sr-90, and all Pu isotopes) and potassium into insoluble forms. Sodium tetraphenylborate (STPB) is added to precipitate the radioactive cesium (Cs-137) and potassium. During the reaction step, STPB decomposes and releases benzene and other organics (i.e., nitrobenzene). As a result, STPB is added to each batch of salt solution. Depending upon the type, age, and source of salt solution being processed, an aqueous slurry of sodium titanate in alcohol (isopropyl and methyl) may also be added to Tank 48 to adsorb strontium (Sr-90) and plutonium (all Pu isotopes) from the salt solution. Since ST is a solid slurry, it will remain in

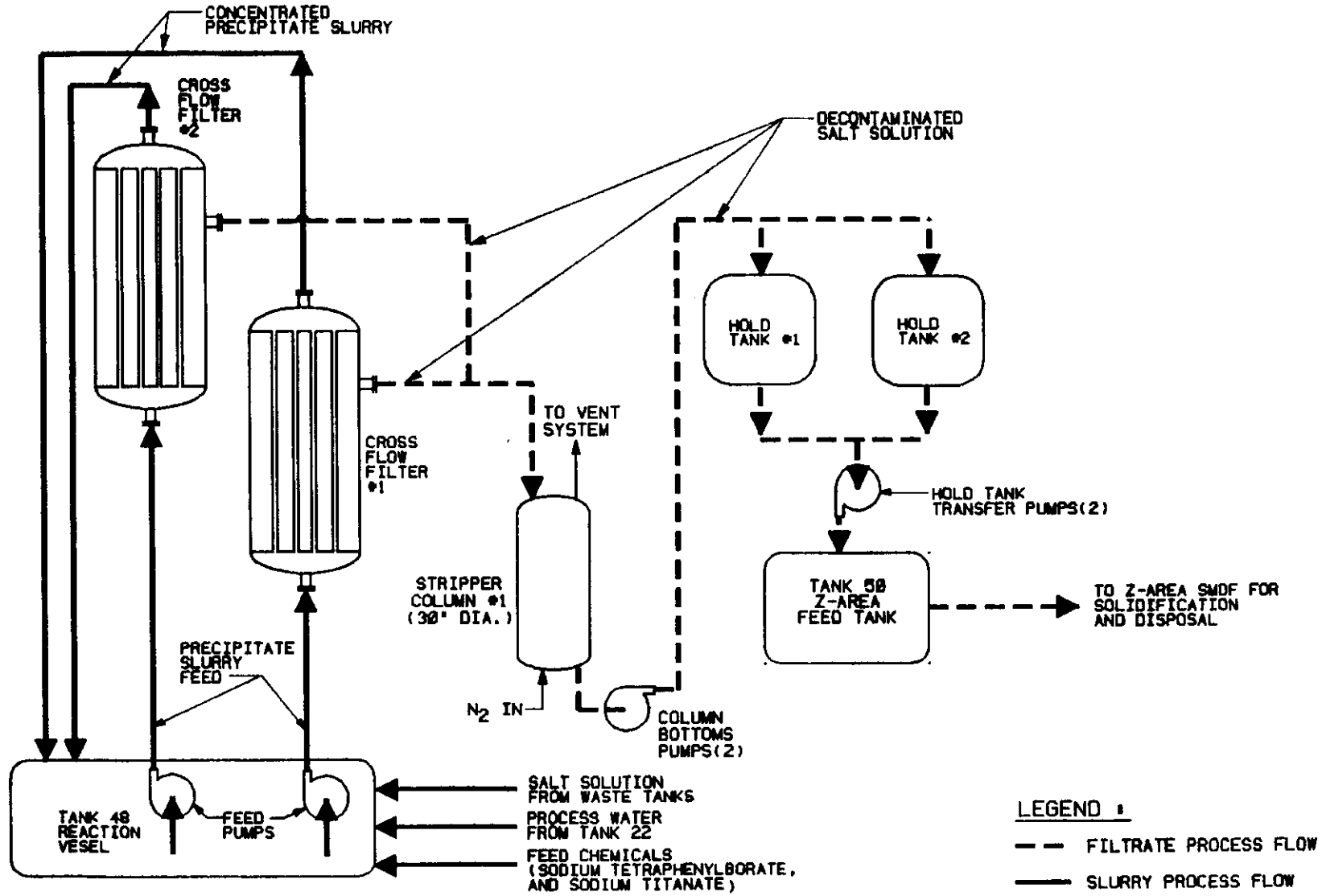

CAD NO.	TITLE	NO SCALE
SE5-2-2006186	FIGURE 4-13 ITP PROCESS FLOW DIAGRAM - PRECIPITATE REACTION STEP	6000-44-3190W

suspension with the precipitate slurry; therefore, ST will be added only once for each reaction cycle (i.e., three batches of salt solution). The mixture is agitated to allow the chemical reactions to reach completion. Simplified equations for these chemical reactions are presented in Table 4-2.

4.5.1.4 Precipitate Concentration Step

The precipitate concentration step occurs within a newly constructed building which houses two cross flow filter units, two stripper columns, two filtrate hold tanks, a laboratory and associated equipment. The reacted salt solution/precipitation slurry is transferred from Tank 48 to the cross flow filters. The two cross flow filters are used to separate the precipitate slurry from the decontaminated salt solution. Each filter has a dedicated feed pump (contained in Tank 48) with a dedicated 6-inch diameter jacketed stainless steel pipe. One filter may operate while the other is being backwashed and cleaned, or both filter systems may operate simultaneously.

Figure 4-14 provides a schematic process flow diagram for a cross flow filter. The cross flow filter resembles a shell and tube heat exchanger; however, the tubes are fabricated using a sintered metal process to allow the liquids to pass through the tubes into the shell. The pore size of the sintered tubes is approximately 0.5 micron. The filtrate is transferred from the shell to a stripper column. The concentrate precipitate slurry remains within the

TABLE 4-2

IN-TANK PRECIPITATION REACTION SUMMARY

Process Feed Chemicals

$NaB(C_6H_5)_4$ = Sodium Tetraphenylborate

$NaTi_2O_5H_{(AQ)}$ = Sodium Titanate (aqueous slurry in alcohol)

Chemical Reaction Equations

$K^+ + B(C_6H_5)_4^- \rightarrow KB(C_6H_5)_{4(S)}$

$Cs^+ + B(C_6H_5)_4^- \rightarrow Cs(C_6H_5)_{4(S)}$

$Sr^{2+} + NaTi_2O_5H_{(AQ)} = [NaTi_2O_5H * Sr]_{(AQ)}$ (Adsorption reaction)

$Pu^{3+} + NaTi_2O_5H_{(AQ)} = [NaTi_2O_5H * Pu]_{(AQ)}$ (Adsorption reaction)

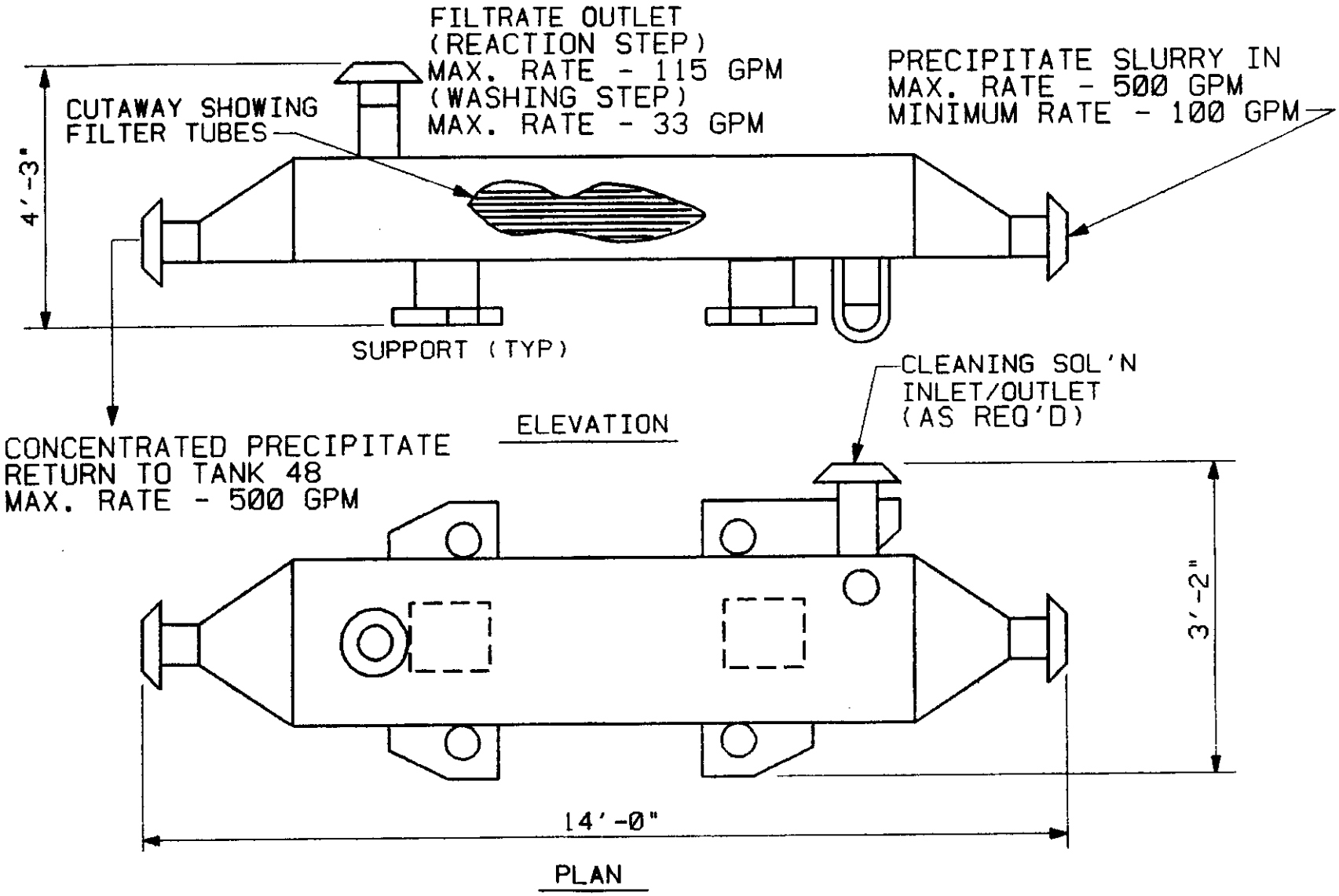

CAD NO.	TITLE:		NO SCALE
SE5-2-2006190		FIGURE 4-14-ITP FILTER ASSEMBLY	6000-44-3190W

tubes and is returned to Tank 48 through a dedicated 6-inch diameter stainless steel pipe. The reacted salt solution is transferred to each cross flow filter at a maximum rate of approximately 500 gallons per minute. In order to maintain the desired operating conditions for the cross flow filters, a minimum reacted salt solution flow rate is maintained. This minimum flow rate (100 gallons per minutes) is maintained by recirculating the reacted salt solution/precipitate slurry through the precipitate return lines to Tank 48.

The filtrate flow out of the sintered metal tubes and into the filter shell (the filtration rate) depends upon the cleanliness of the sintered metal tubes and the pressure differential between the tubes and the shell. This pressure is controlled by adjusting valves located on the return line to Tank 48.

A filtrate flow rate, (that is, the rate at which filtered reacted salt solution/precipitate slurry is removed from the cross flow filter) in excess of 300 gallons per minute could be obtained. However, since the maximum filtrate flow rate into the stripper columns is 115 gallons per minute, this capacity limitation of the stripper column will also limit the rate at which filtrate is removed from the cross flow filter. Therefore, the operable maximum flow rate of filtrate out of the cross flow filter is 115 gallons per minute (see Figure 4-14). The filtrate flow rate can be reduced significantly when the filters are near the end of the concentration step or are completely fouled.

The decontaminated salt solution (filtrate) is passed through a 30-inch diameter stripper column for organic removal. Nitrogen gas is used as the stripping media to prevent the formation of an explosive environment within the stripper column. Figure 4-15 presents a diagram of the stripper column. The decontaminated salt solution is then routed to one of the two filtrate hold tanks where a representative sample is collected and analyzed for radioactivity, benzene, and alcohol concentrations. Samples will be taken and analyzed during the ITP process to verify operation effectiveness and maintain process control. After analysis the waste samples will drain to Tank 48 to be returned to the ITP process. Figure 4-16 provides a diagram of the filtrate hold tanks. If the level of these components exceed the Tank 50 permitted concentration limits (SCDHEC Permit #14520) or SRS specified levels, the filtrate is returned to Tank 48 for reprocessing. Otherwise, the filtrate is transferred to Tank 50 which is the Z-Area SMDF feed tank. The transfer line between the filtrate hold tanks and Tank 50 is a 3-inch diameter jacketed stainless steel pipe.

The precipitate concentration step continues until the desired suspended solids content is obtained (approximately 10% by weight). The estimated duration of the precipitate concentration step is determined by calculating the amount of water that must be removed from the reacted precipitate slurry. The actual quantity of filtrate removed from the reacted slurry is recorded to estimate the suspended solids content

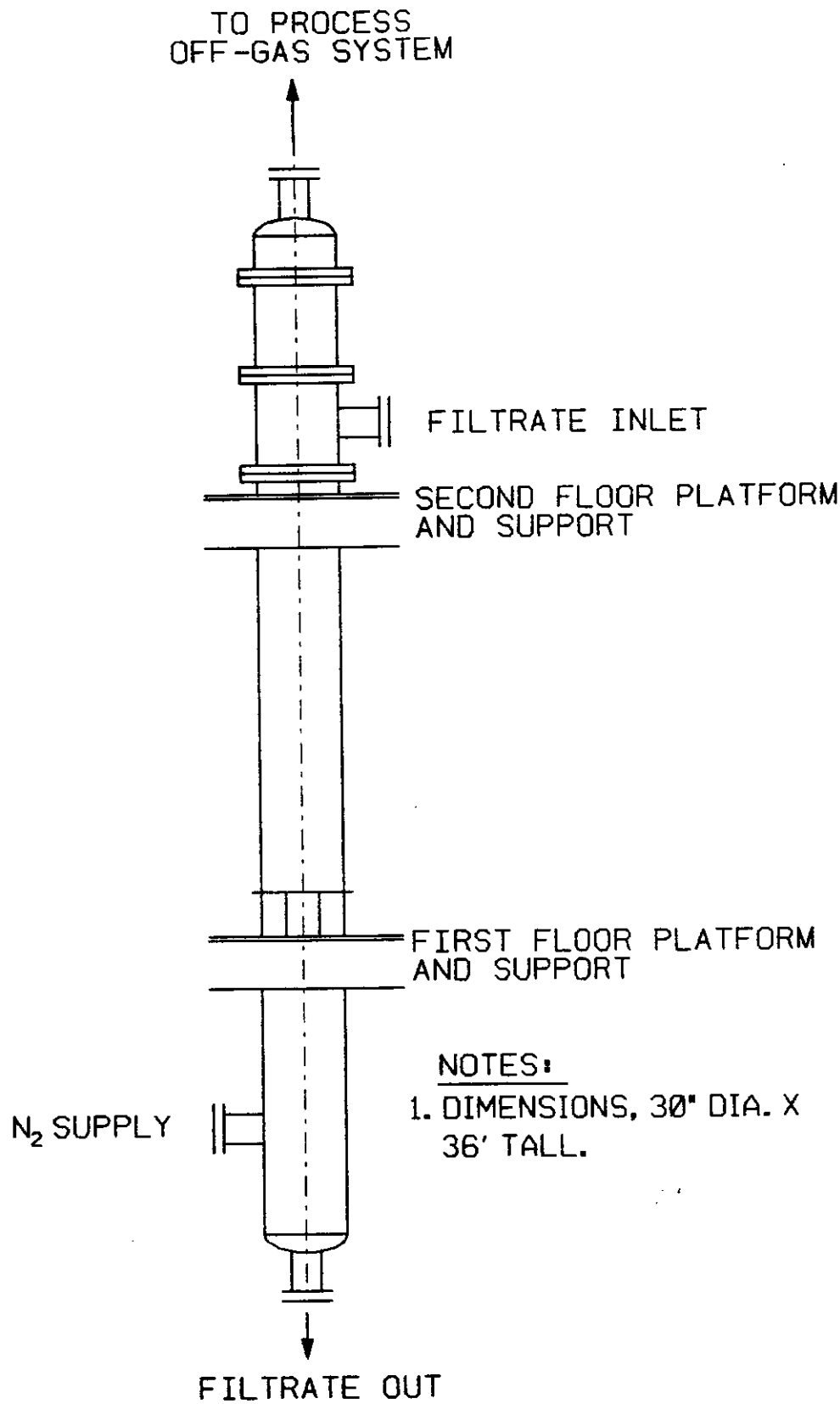

NOTES:

1. DIMENSIONS, 30" DIA. X 36' TALL.

CAD NO.	FIGURE 4-15 DECONTAMINATED SALT SOLUTION FILTRATE STRIPPER COLUMN	NO SCALE
W2020533		6000-44-3190W

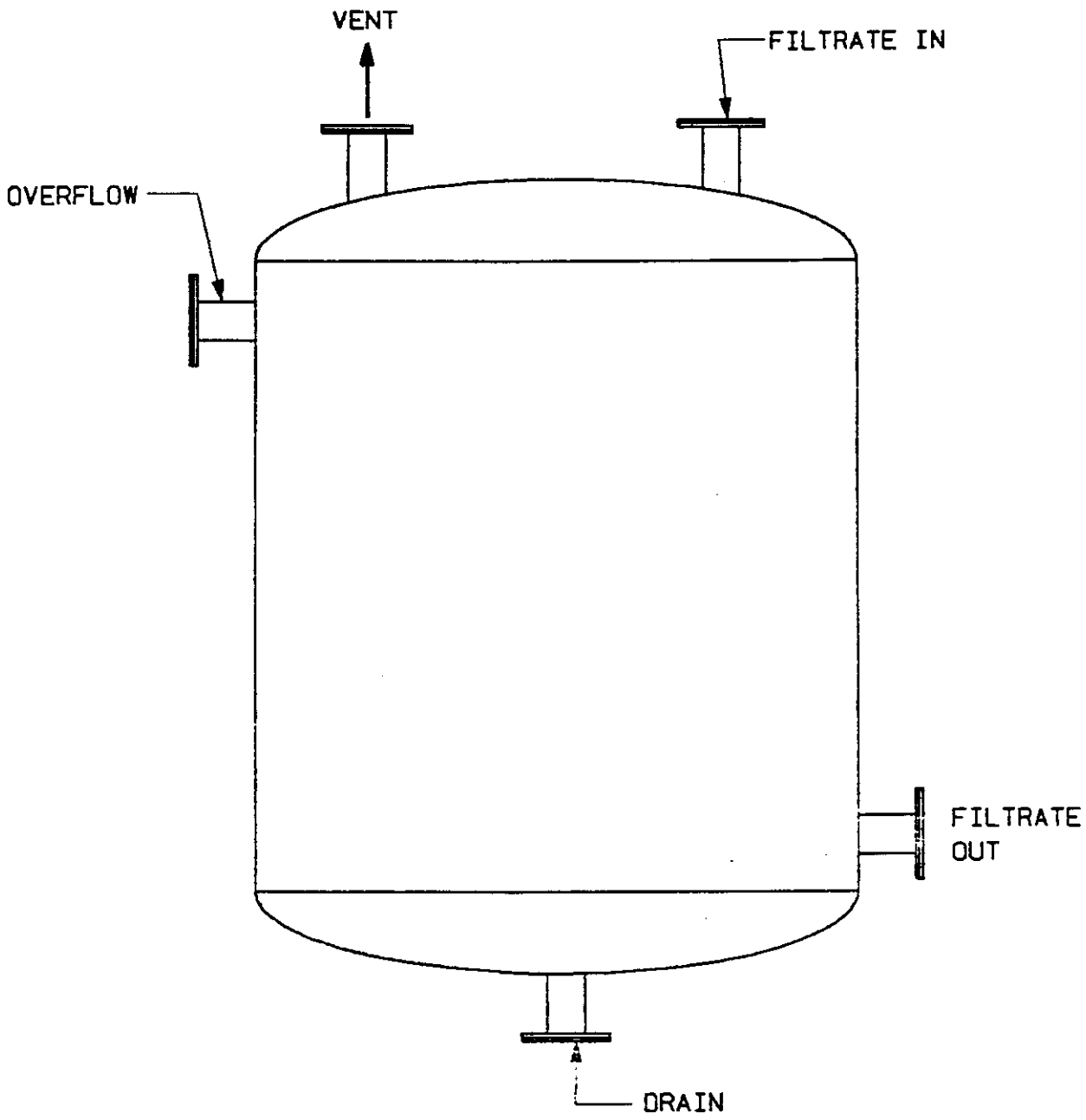

CAD NO.	FIGURE 4-16	NO SCALE
W2020533	ITP FILTRATE HOLD TANK	6000-44-3190W

in the concentrate precipitate slurry remaining in Tank 48.

4.5.1.5 Precipitate Slurry Washing Step

The accumulated precipitate slurry is washed with inhibited water to reduce the concentration of the remaining soluble salts and excess process feed chemicals. The washing step is performed to maintain the salt and process chemical concentrations within the allowable permit limits established for the DWPF Vitrification Facility. A process flow diagram for the washing step is provided as Figure 4-17.

The washing step commences following the reaction of three salt solution batches in Tank 48. Inhibited water is added to Tank 48 as required to wash the precipitate slurry. Up to four slurry pumps are used to mix the inhibited water and precipitate slurry. The resulting slurry is filtered in the same manner used in the reaction/filtration step. The filtrate flow rate during the washing phase will be approximately 33 gallons per minute when the filters are clean, [Note: 33 gpm is the flow limit for the wash water stripper column), and as low as 2 gallons per minute near the end of the concentration step or are completely fouled.

The washed precipitate slurry is returned to Tank 48. The spent wash water (filtrate) is passed through a 16-inch diameter stripper column to remove any organics. The stripper column for the washing step is

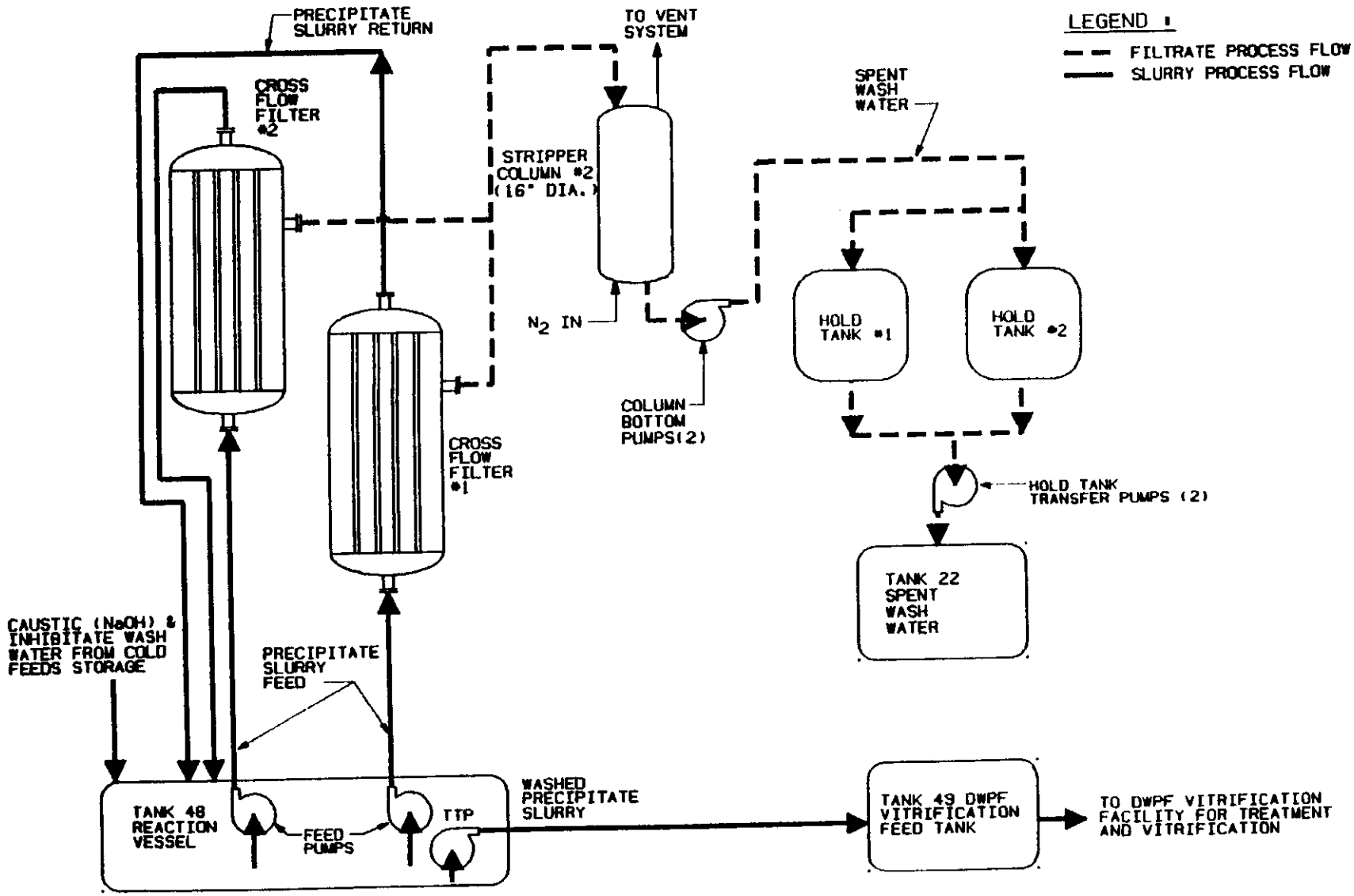

CAD NO.	TITLE	NO SCALE
SE5-2-2006186	FIGURE 4-17 ITP PROCESS FLOW DIAGRAM - PRECIPITATE WASHING STEP	6000-44-3190W

smaller than the stripper column used during the precipitate reaction step since the maximum filtrate flow rate is smaller although the concentration of organics is expected to be higher. As with the precipitate reaction step, nitrogen gas is used as the stripping media. Figure 4-18 provides a diagram of the stripper column. The spent wash water is also collected alternately in the two filtrate hold tanks. A representative sample is collected from the hold tank and analyzed for benzene and alcohol content. If the levels of these components are suitable, the filtrate is transferred to Tank 22 through a 3-inch stainless steel pipeline. Otherwise the filtrate is returned to Tank 48. Samples will be taken and analyzed during the ITP process to verify operation effectiveness and maintain process control. After analysis the waste samples will drain to Tank 48 to be returned to the ITP process. The spent wash water in Tank 22 is used as process water for the precipitate reaction step.

As with the precipitate concentration step, the time required to obtain the desired suspended solids content is based upon the calculated amount of filtrate required to be removed.

4.5.1.6 Washed Precipitate Slurry Transfer Step

Upon completion of the washing step, the washed precipitate slurry is pumped to the DWPF Vitrification Facility feed tank (Tank 49) through a dedicated 3-inch jacketed stainless steel pipeline at an approximate rate of 100 gallons per minute.

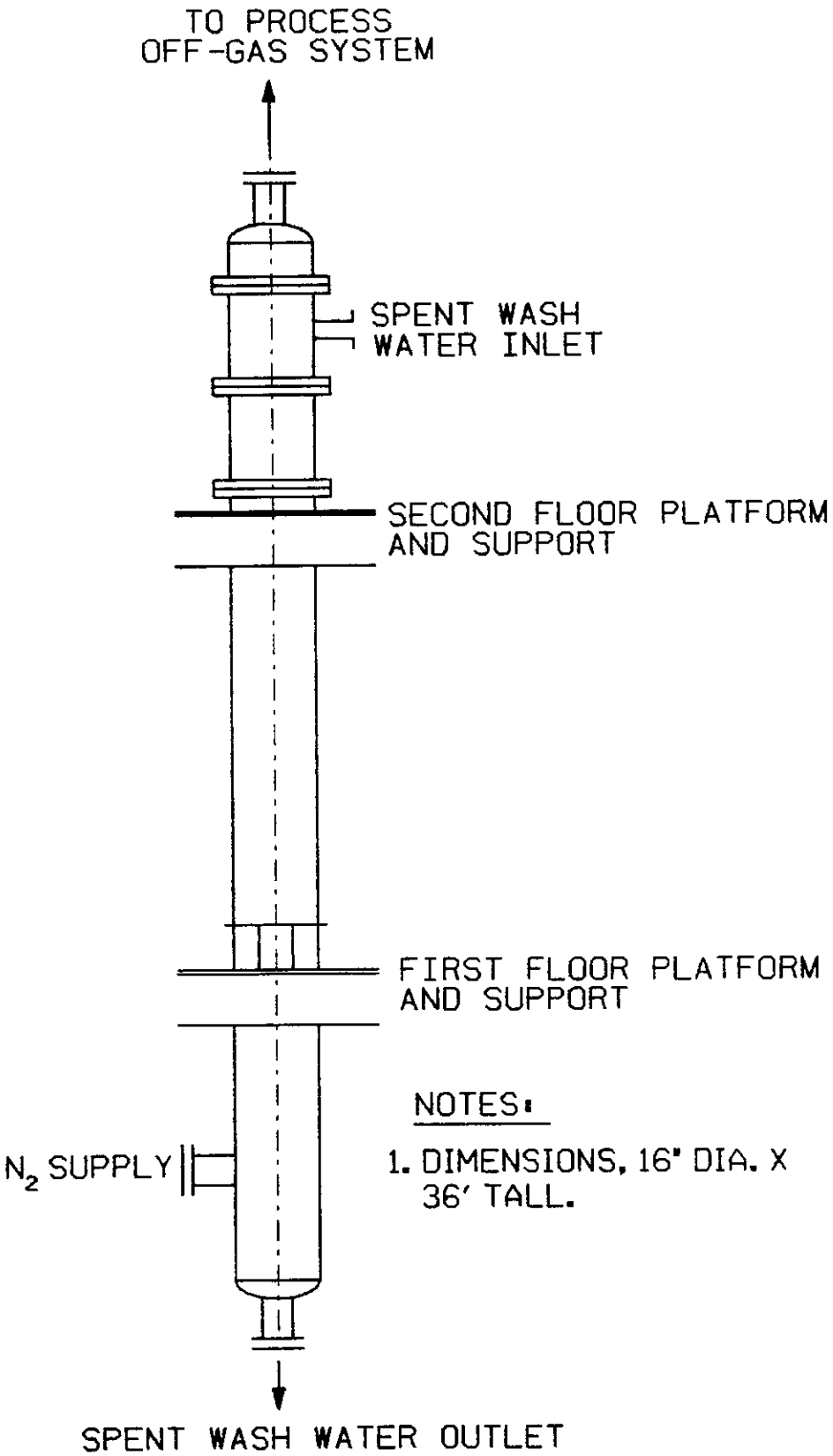

NOTES:

1. DIMENSIONS, 16" DIA. X 36' TALL.

CAD NO.	FIGURE 4-18	NO SCALE
W2020533	SPENT WASH WATER STRIPPER COLUMN	6000-44-3190W

An inventory (up to 1 million gallons) of the washed precipitate slurry will be maintained in Tank 49 to provide the precipitate slurry feed for the DWPF Vitrification Facility. The washed precipitate slurry generated from the ITP process will be periodically added to this inventory. The precipitate slurry inventory will be thoroughly blended with slurry pumps in Tank 49 prior to being transferred to the DWPF Vitrification Facility. The washed precipitate slurry will be transferred in sub-batches to the DWPF Vitrification Facility via the H/S Interarea Transfer Line (see Section 4.8.6). A sub-batch refers to the quantity of precipitate slurry (approximately 3000 gallons) which is transferred to the DWPF Vitrification Facility at one time.

4.5.2 ITP Start-up Testing

Although the ITP facilities are existing, radioactive operations have not occurred to date. In order to ensure that the processing equipment will function as designed, a start-up testing program will be implemented. This program consists of water test runs to check out process equipment operability and non-radioactive chemical runs to simulate actual process operations. The start-up testing program will consist of conducting full-scale process operations.

During the start-up operations, only water and non-radioactive simulated waste will be used. This precaution will: (1) eliminate the potential exposure of employees to radiation during start-up operations and check-out procedures, (2) eliminate the need for radioactive decontamination in the event that process modifications are identified as a result of the

start-up operations, and (3) allow operators to familiarize themselves with the range of process operations and upset conditions without fear of a radioactive release.

In order to allow non-radioactive operations, a temporary facility was constructed to be a substitute for Tank 48 since Tank 48 already contains radioactive waste materials. The temporary facility consists of a 10,000 gallon operating capacity feed tank (substitute for Tank 48), a flush water tank, a filter feed pump (similar pump characteristics to the feed pumps currently installed within Tank 48), and two diaphragm pumps (used to collect samples at the temporary facility). The temporary facility also limits the amount of waste generated during the start-up testing program by minimizing the size of the feed tank. This start-up program is being initiated under the existing Part A Permit issued to the SRS for this facility. A description of the start-up testing program is provided in this permit application to allow continued start-up testing upon issuance of the Industrial Wastewater Treatment Permit for the Tank Farms.

4.5.2.1 Water Runs

The water runs for ITP process equipment began in August 1989 upon mechanical completion. Additional water runs will be conducted in two phases: system level water runs and integrated water runs. The primary objectives of the system level water run program are:

- Demonstrate the physical integrity of all process piping and vessels.

- Demonstrate the operability of all instrumentation and process controls.
- Demonstrate that logic control for all 12 possible operating schemes function as desired.

For system level water runs, water will be added to the system to be tested using a combination of permanent and temporary piping. The water from system level water runs will be routed to the H-Area Retention Basin.

After water runs are completed for each system, integrated water runs will be performed to demonstrate operation of the entire facility.

The primary objective of the integrated water runs is to ensure the integrity and operability of all components of the ITP system, including temporary facility interfaces, before introduction of a simulated waste. All operations that will be performed during the chemical run program will be demonstrated with water.

The temporary feed tank and associated temporary piping will be thoroughly flushed initially to preclude passing undesirable solids (such as welding slag) into the permanently installed process equipment. Startup screens are installed at strategic locations in the process to trap undesirable solids. These screens will be removed prior to starting the chemical run program.

Filtered water will be added to the temporary feed tank and pumped to the filters, strippers and hold tanks. The water can be recycled back to the temporary feed tank as required until this phase of the start-up program is completed.

Operation of the nitrogen stripping system will be demonstrated. The nitrogen blankets to the filtrate hold tanks will also be initiated.

Transfers between the temporary feed tank and the flush tank will be performed to simulate the transfer of waste to/from Tank 48. The operation of the sample collection system will also be demonstrated. At least one sample will be taken at each sampling location to demonstrate operation of the sampling hardware and sampling technique.

The cleaning systems to each component (filters, strippers, hold tanks, sumps) will be demonstrated using water.

At the completion of Integrated Water Runs, the water may be drained to the H-Area Retention Basin or stored in either the flush tank or filtrate hold tank for future use.

If the system will be down for an extended time before beginning the chemical run program, the filters and strippers will be placed in wet lay-up to mitigate bacterial growth.

4.5.2.2 Chemical Run Program

The chemical run program for the In-Tank Precipitation process will demonstrate the operability of the process using feed streams composed of non-radioactive chemical simulants. The characteristics of the chemical simulant will replicate those of the true process feedstock as realistically as possible to ensure that the test results generated by the program are credible. The temporary facilities will be used to mix, store, and reclaim the simulant. At the completion of simulant runs, the system will be flushed and cleaned using inhibited water and oxalic acid. The filters and the strippers will then be placed in wet lay-up.

The primary objective of the chemical run program is to ensure that the facility will fulfill its design basis function prior to the introduction of radioactive feed. The other primary goals of the chemical run program are as follows:

- Demonstrate filter integrity and efficiency.
- Evaluate the feasibility of specified operating scenarios.
- Determine the optimum combinations(s) of filter feed pump speed and precipitate flow control valve settings to maximize control function stability and filtrate production rate.

- Determine optimum backpulse frequency and filter differential pressure necessary to achieve maximum filtrate production. Backpulse duration will be held at a constant value based on previous tests and vendor literature.
- Evaluate stripper performance.
- Demonstrate filter cleaning operations.
- Identify and resolve any operational and/or safety concerns.
- Train and educate operating personnel in the ITP process, including laboratory personnel.

The chemical simulant will be prepared in the temporary feed tank. The simulant will be made by mixing (in order of addition) 4.81M Na+ salt solution. Surfynol 104E (an anti-foaming agent), sodium tetraphenylborate (STPB) and sodium titanate (ST) to form a 1 wt% solids mixture.

Testing at Savannah River Laboratory (SRL) determined that the hydroxide solution is the "worst case" composition for evaluation of stripper operations.

Benzene and alcohols (methanol and isopropanol) will be added to the feed to test the organics removal efficiency of the strippers. The efficiency of the decontaminated salt solution stripper will be tested at the anticipated worst case amount of organics present in the filtrate. The wash water stripper will be tested at the anticipated worst case amount of organics

present during the washing stage of the ITP process cycle.

In addition to collecting data on stripper performance, data will be collected on the filters to determine the ranges/setpoints of operating parameters for the filter backpulse system, filter differential pressure control, and filtrate production. Data on support systems (i.e., nitrogen supply system, hold tank nitrogen blankets and stripper offgas systems) will also be collected. During the final phase of simulant runs, processing will be conducted in automatic mode to demonstrate full system operability.

The wastewater from chemical runs will be sent to Tank 48. If an emergency discharge occurs, it will be diverted to the H-Area Retention Basin via the storm drain.

Following completion of the chemical run program, cleaning of the ITP filters, strippers and hold tanks will be demonstrated. The filters and the strippers will be placed in wet lay-up to mitigate bacterial growth. The temporary facility will be flushed and cleaned. The temporary facility will be disconnected from the permanent facility and all hardwired and software interlocks and controls configured for permanent operations prior to the start of radioactive operations.

4.5.3 In-Tank Precipitation Process Equipment

The ITP process consists of four existing waste tanks (Tanks 22, 48, 49 and 50), Building 241-96H (which contains the filtration equipment, stripper columns, hold tanks and a laboratory), a control room (Building 241-82H), a cold feeds preparation and storage area, and a nitrogen storage area. A general description of the process equipment is presented below. The specifications for the process equipment is summarized in Section 7.2. The transfer and feed pumps are described in Section 7.6.

Tank 22

Tank 22 is an existing Type IV waste tank which was constructed in 1962. This tank holds spent wash water, which may contain soluble salts and process chemicals, used during the precipitate washing step. Sections 4.7 and 7.4.4 contain additional details for Type IV waste tanks. Table 7-84 provides the summary specifications for this tank and its associated ancillary equipment.

Tank 48

Tank 48 is an existing Type IIIA waste tank constructed in 1981. This tank is used as the ITP reaction vessel and was retrofitted with two filter feed pumps, one transfer pump, and four slurry pumps (for pump information see Section 7.6).

The precipitate slurry in Tank 48 generates benzene which is formed by radiolysis of the tetraphenylborate precipitate. The radiolysis reaction has no equilibrium

and the benzene is liberated until all the available tetraphenylborate is exhausted. Tank 48 is purged with nitrogen gas rather than air to prevent potential ignition of potentially combustible solids. This nitrogen purging is a standard industrial practice to negate the potential combustion of flammable materials. Sections 4.7 and 7.4.3 contain additional details for Type IIIA tanks. Table 7-75 provides the specifications for this tank and its associated ancillary equipment.

Tank 49

Tank 49 is an existing Type IIIA waste tank that was constructed in 1981. The waste tank has been retrofitted to hold the washed precipitate slurry for transfer to the DWPF Vitrification Facility. Four slurry pumps and two transfer pumps (see Section 7.6) were added to Tank 49 to accommodate the handling of the washed precipitate slurry. This tank is also purged with nitrogen gas for the same reasons discussed for Tank 48. Sections 4.7 and 7.4.3 contain additional details for Type IIIA tanks. Table 7-76 provides the summary specifications for this tank and its associated ancillary equipment.

Tank 50

The operation of Tank 50 is permitted under SCDHEC Industrial Wastewater Permit #14520; therefore, this tank and associated process equipment are not covered by this permit application.

Cross Flow Filters

The filtration building contains two cross flow filters which are 14 feet in length and 1.5 feet in diameter. The vessel shells are constructed from stainless steel and contain sintered metal tubes with a pore size of 0.5 micron. Section 7.2 provides the specifications for the filters.

One filter can be used, while the other is being cleaned or both units can operate simultaneously. The filters can be cleaned by backpulsing with nitrogen gas while the filter is being used or by soaking in oxalic acid when the filter is not in operation. The reacted salt solution/precipitate slurry from Tank 48 passes through the inside of the sintered metal tubes. Filtration is achieved by creating a pressure differential across the sintered metal tubes. The filtrate is collected within the shell of the filter.

Stripper Columns

These units function to remove the benzene which is evolved during the ITP process. One stripper processes the filtrate which results from the precipitate reaction step. The other stripper processes the spent wash water generated during the precipitate slurry washing step. Both units use nitrogen gas as the stripping medium.

Stripper column bottoms are pumped to the filtrate hold tanks. Each stripper column is equipped with a vapor processing system consisting of a high efficiency mist eliminator, a preheater, and two HEPA filters. The stripper off-gas leaving the HEPA filters is combined with the building HVAC exhaust air and vented to the atmosphere through a stack. SCDHEC air quality construction permit #0080-0046-CD covers the exhaust gases from the ITP process.

The stripper used during the precipitate concentration step is 30 inches in diameter and contains 20 feet of structured packing. The filtrate flow rate to the stripper is approximately 115 gallons per minute when the filters are clean and as low as 2 gallons per minute when the filters are near the end of the concentration step or completely fouled. The nitrogen flow rate is approximately 440 standard cubic feet per minute. Section 7.2 provides the specifications for the decontaminated salt solution stripper column.

The stripper used during the washing step is 16 inches in diameter and also contains 20 feet of structured packing.

The filtrate flow to the stripper is approximately 33 gallons per minute (during washing) when the filters are clean and may drop to as low as 2 gallons per minute as the filters become fouled. The nitrogen flow rate is approximately 220 standard cubic feet per minute. Section 7.2 provides the specification for the wash water stripper column.

Filtrate Hold Tanks

The filtration building also contains two filtrate hold tanks, each with a working capacity of approximately 12,000 gallons. A nitrogen blanket is maintained within each tank to prevent the formation of an explosive environment. The hold tanks are constructed from 304L stainless steel. Two units are used so that as one vessel is being filled, the other can be sampled and used as a transfer tank. Section 7.2 provides the specifications for these tanks and associated ancillary equipment.

4.6 Sludge Processing

The influent waste streams from the Separations Facilities contain insoluble compounds which settle out in the waste receipt tanks (i.e., HHW receipt tanks and LHW evaporator feed tanks). The insoluble compounds account for approximately 4 weight percent (dry basis) of the influent waste streams generated by the Separations Facilities. The sludge primarily contains aluminum, iron, manganese, silicon, uranium, nickel and mercury hydroxides/oxides. The sludge also contains spent ion-exchange resins from the CRCs and other residue resulting from incidental waste management.

The sludge contains a majority of the radionuclides and is therefore

highly radioactive. These radionuclides require long-term isolation. To convert the radioactive sludge into a waste form that is suitable to long-term isolation, the sludge is subjected to a secondary treatment process known as sludge processing.

In general, sludge processing is a physical/chemical process to prepare sludge for incorporation into borosilicate glass at the DWPF Vitrification Facility. The main objective of sludge processing is to remove soluble salts and process chemicals from the sludge prior to transfer to the DWPF Vitrification Facility. High concentrations of soluble salts and process chemicals would adversely impact the quality of the borosilicate glass. The sludge in the waste tanks typically consists of 59 weight percent water, 24 weight percent soluble components, and 17 weight percent insoluble components. In addition, some of the sludge will be subjected to dissolution of solid non-radioactive aluminum compounds to improve the glass viscosity and reduce the overall volume of radioactive glass produced.

4.6.1 Process Flow

The sludge processing is analogous to sludge removal and treatment from a primary clarifier at a municipal wastewater treatment facility. However, sludge processing at the Tank Farms is more extensive due to the quality controls required for the production of the borosilicate glass. There are four steps in the sludge processing procedure and include:

- Sludge removal,
- Aluminum dissolution (optional),
- Washing/co-washing, and
- Transfer.

A simplified process flow diagram of the sludge processing is presented as Figure 4-19. In general, sludge is removed from the various waste tanks and transferred to Tank 42 for washing. Sludge transfer and washing may also occur concurrently in either Tanks 40 or 51. Some of the sludge requires an additional aluminum dissolution step which occurs in Tank 42. A single batch (up to 1,000,000 gallons) of sludge takes about 2 years to process; however, this single batch generally will provide the DWPF Vitrification Facility with enough feed materials for at least 2 years of operation. Transfer of processed sludge to the DWPF Vitrification Facility originates from Tanks 40 or 51 (in an alternating sequence). The following sections provide a description of the sludge processing procedures.

4.6.1.1 Sludge Removal

The removal of sludge from a waste tank is similar to the removal of the salt cake. When the sludge from a waste tank is scheduled for removal, the waste tank is retrofitted with up to four long-shaft slurry pumps (see Section 7.6.3) and a telescoping transfer pump (see Section 7.6.2.2). Unlike salt cake removal, the slurry pumps are used to suspend the solids within the waste supernate instead of dissolving the solids. If the tank does not contain an adequate volume of supernate, additional process water (i.e., inhibited well water, RBOF/RRF wastewater, or other process water source) is added to the tank. When the sludge solids are

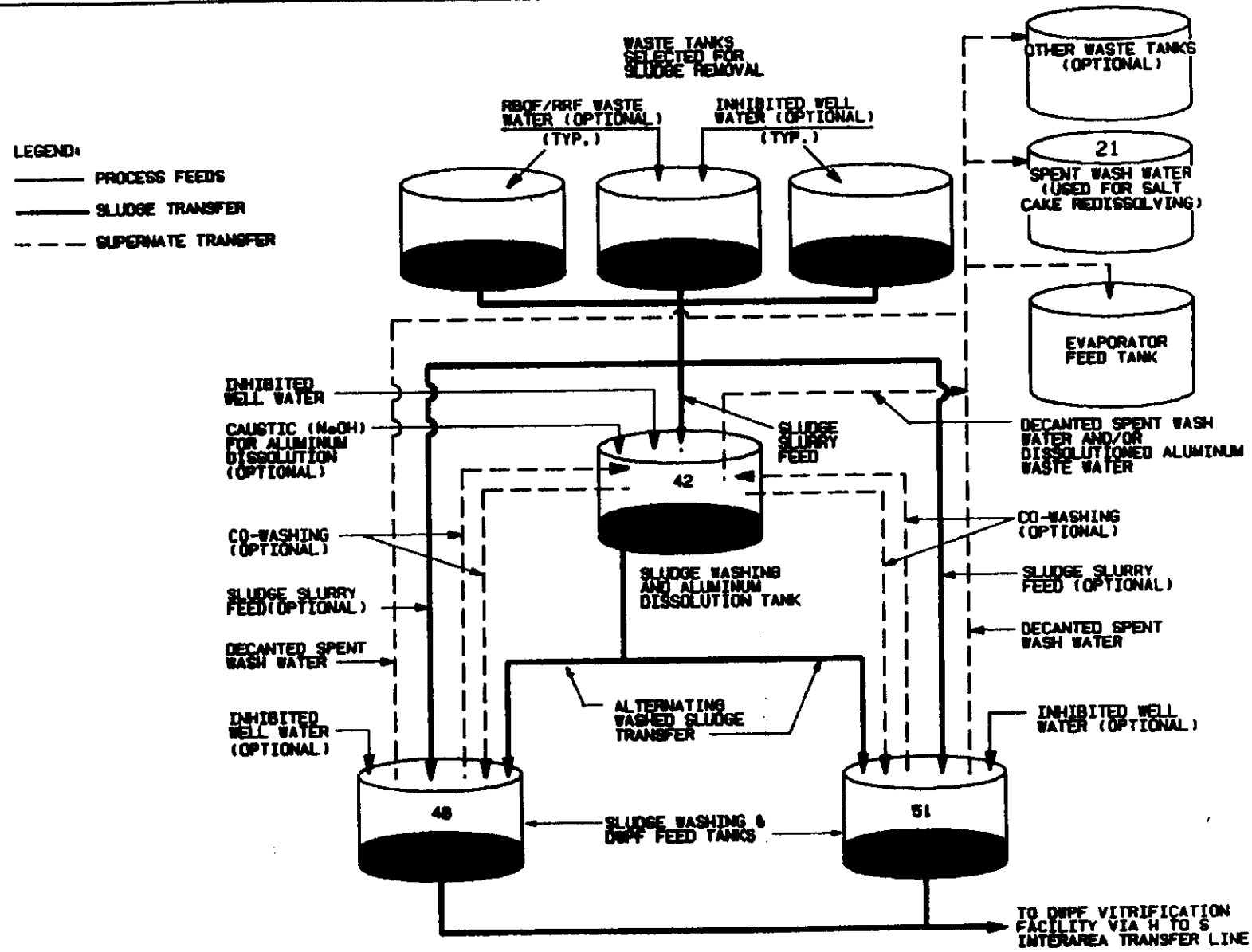

CAD NO.	TITLE:		
SE5-2-2006187		FIGURE 4-19 SLUDGE PROCESSING FLOW DIAGRAM	NO SCALE 6000-44-3190W

adequately suspended within the slurry, the transfer pump is used to transfer the slurry to the sludge processing tanks (Tanks 40, 42, and 51). Typically, at least four additions of water is required to remove all of the accumulated sludge from a waste tank.

Because of the large volumes of water required to wash the sludge, three waste tanks are used for the sludge process operations. Two of the waste tanks are used to actively receive and process the sludge while the other tank is used to hold the processed sludge for feed to the DWPF Vitrification Facility. Tank 42 is dedicated solely for sludge washing and aluminum dissolution. Tanks 40 and 51 alternate as a second washing tank and DWPF Vitrification feed tank. The use of the two alternating tanks allows sludge washing to continue in one tank while the other tank is holding the washed sludge slurry for subsequent transfer to the DWPF Vitrification Facility.

As with the salt cake removal process, sludge will be removed from several different waste tanks simultaneously and blended within the sludge processing process tanks (Tanks 40, 42, and 51) to obtain an adequate size batch with a consistent chemical/radioactive composition. This homogeneous waste feed to the DWPF Vitrification Facility produces a final waste product (borosilicate glass) within a narrower

QA/QC range. This narrower range is desirable for long-term isolation of the radioactive wastes.

4.6.1.2 Aluminum Dissolution (Optional)

Aluminum adversely affects the quality and adds to the overall volume of the borosilicate glass produced at the DWPF Vitrification Facility. Therefore, waste tanks containing HHW sludge may require aluminum dissolution if the aluminum concentration exceeds the SRS levels established for the DWPF Vitrification Facility. The HHW sludge in Tanks 11, 12, 13, 14 and 15 is expected to require this aluminum dissolution step.

This optional procedure occurs in Tank 42. A sodium hydroxide solution is added to the sludge slurry to dissolve the solid aluminum compounds. During this dissolution step, the sludge is heated by steam spargers and agitated with the slurry pumps to expedite the dissolution. Steam sparging is a standard method for heating a solution where the addition of water is not a concern. The temperature of the sludge slurry is maintained below 90°C. The aluminum dissolution procedure is completed in approximately 4 to 5 days. The sludge is allowed to settle and the supernate is decanted to an evaporator feed tank or another available waste tank (for temporary storage) by a telescoping transfer jet (see Section 7.6.2.2).

The aluminum dissolution process will continue until the aluminum concentration in the sludge falls within the acceptable range specified by the DWPF Vitrification Facility. Up to 50% of the aluminum originally in the sludge within Tank 42 may be dissolved each time the dissolution process is conducted. Upon completing the aluminum dissolution procedure, the sludge will remain in Tank 42 for washing.

4.6.1.3 Washing and Co-Washing

The washing and optional co-washing of the sludge occurs in Tanks 42, 40, and 51 for the purpose of removing soluble salts from the sludge.

During the washing step, inhibited water or RBOF/RRF wastewater is added to Tank 42. The sludge slurry and inhibited water are agitated for approximately 4 to 5 days by the long-shaft slurry pumps (see Section 7.6.3). After agitation, the insoluble solids are allowed to gravity settle. The liquid supernate is decanted from Tank 42 by using a telescoping transfer jet (see Section 7.6.2.2). The decanted liquid is either transferred to Tank 40 or Tank 51 for co-washing, to an evaporator feed tank for subsequent evaporation,or to Tank 21 for dissolving salt cake. If required, the spent wash water can be routed to any of the waste tanks to meet operational requirements. The precise disposition of the spent wash water

is dependent upon the need for co-washing, the schedule for salt cake removal, whether the water can be used to dissolve salt cake, and available capacity of the waste tanks.

Co-washing is an optional procedure which utilizes the spent wash water from Tank 42 to wash the sludge in Tank 40 or Tank 51. Co-washing significantly reduces the amount of inhibited water added to the Tank Farm waste inventory. Following agitation of the spent wash water and sludge contained in the co-washing tank, the contents are allowed to settle. The decantable wash water is normally transferred directly to an evaporator feed tank or to Tank 21. If required, the spent wash water can be routed to any of the waste tanks to meet operational requirements. The precise disposition of the spent wash water is dependent upon the salt concentration, the schedule for salt cake removal, whether the water can be used to dissolve salt cake, and available capacity of the waste tanks.

The washing/co-washing process is repeated with fresh wash water (i.e., inhibited water and/or RBOF/RRF waste water) until the soluble salt concentration is reduced to approximately 3 weight percent on a dried sludge basis. Fresh wash water may be added directly to the second washing tank (Tank 40 or 51) to attain the desired soluble salt concentration. When the concentration limit is achieved in both the

first and second sludge washing tanks, the washing process is complete.

A specific example is provided below to further illustrate the sludge washing step. The first sludge batch was transferred to Tanks 42 and 51 for washing. The washing process began by adding approximately 200,000 gallons of inhibited water to Tank 42. The sludge/wash water was agitated to dissolve the soluble components. After agitation, the insoluble solids were allowed to settle. Approximately 200,000 gallons of the supernate were decanted from Tank 42 and transferred to Tank 51. In Tank 51, the same process of agitation and settling was conducted. After settling, the 200,000 gallons of spent wash water was decanted from Tank 51 and transferred to an evaporator feed tank.

While the sludge was being agitated in Tank 51, another 200,000 gallons of fresh inhibited water was added to Tank 42. This washing/co-washing process (i.e., sending the wash water from Tank 42 to Tank 51 and from Tank 51 to an evaporator feed tank) is repeated until the soluble salt concentration of both tanks is below the DWPF Vitrification Facility feed specifications. Approximately 17 washing/co-washing cycles are required to complete the processing of one sludge batch.

4.6.1.4 Washed Sludge Slurry Transfer

When the sludge washing process has been completed in Tank 42 and the co-washing tank (Tank 40 or 51), the contents of these tanks are combined in the co-washing tank (Tank 40 or 51). The contents of Tank 42 will be transferred with a telescoping transfer pump. The combined contents of these two tanks will be blended with slurry pumps. The washed sludge is agitated to keep the solids suspended in the slurry.

Up to 1,000,000 gallons of the washed sludge slurry is processed for each sludge processing cycle. The sludge processing cycle takes about 22 months to complete. During this time period, the current inventory of washed sludge slurry contained in the DWPF Vitrification Facility feed tank (Tank 40 or 51) is transferred to the DWPF Vitrification Facility in sub-batches. Tanks 40 and 51 each contain two telescoping transfer pumps to transfer the washed sludge slurry to the DWPF Vitrification Facility. These pumps are able to transfer the slurry at approximately 100 gallons per minute.

Approximately 29 months is required to process a 1,000,000 gallon batch of washed sludge slurry through the DWPF Vitrification Facility. Upon expending the inventory of the DWPF Vitrification Facility feed tank, a new batch of washed sludge will normally be ready for

transfer to the DWPF Vitrification Facility. The DWPF Vitrification Facility feed and co-washing tank functions (Tanks 40 and 51) will be switched to allow processing of another batch of sludge.

4.6.2 Process Equipment

The sludge processing process consists of three existing waste tanks (40, 42, and 51). A general description of the process equipment is presented below.

Tank 42

Tank 42 is the main tank used for the processing of sludge. This tank is an existing Type IIIA tank located in H Area. The tank was built in 1979 and was retrofitted for use in sludge processing. Four standard long-shaft slurry pumps (see Section 7.6.3) and a telescoping transfer pump (see Section 7.6.2.2) were added to this tank to mix and transfer the sludge slurry. Tank 42 is also equipped with a telescoping transfer jet to decant the wash water. Removable steam spargers were also installed to heat the sludge slurry during the optional aluminum dissolution step. Sections 4.7 and 7.4.3 contain additional details for Type IIIA tanks. Table 7-69 provides a summary of the specifications for Tank 42 and associated sludge processing equipment.

Tank 40 and 51

Tanks 40 and 51 are existing Type IIIA vessels built in 1980 and 1983, respectively. These tanks were retrofitted

for use as the co-washing/transfer tanks for the sludge processing procedure. Tanks 40 and 51 will alternate as the co-washing/transfer tanks. When Tank 40 is used as a co-washing tank then Tank 51 will be the transfer tank (and vice versa). Four quad-volute slurry pumps (see Section 7.6.3), one telescoping transfer jet (see Section 7.6.2.2), and two telescoping transfer pumps (see Section 7.6.2.2) have been added to each of these tanks. The telescoping transfer jet is used to decant the spent wash water from the tank. The telescoping transfer pumps are used to transfer the sludge slurry. Sections 4.7 and 7.4.3 contain additional details for Type IIIA tanks. Tables 7-67 and 7-77 provide a summary of the specifications for Tanks 40 and 51, and the associated sludge processing equipment.

<u>Tank 21</u>

Tank 21 is an existing Type IV waste tank located in H Area. This tank was selected to receive and hold the spent wash water generated during the sludge processing. The spent wash water is either used to dissolve salt cake or sent to an evaporator feed tank for processing. Sections 4.7 and 7.4.4 provides further details for this tank. Table 7-83 provides a summary of the specifications for Tanks 21 and the associated sludge processing equipment.

4.7 Waste Tanks

Underground tanks have been constructed for containing radioactive waste since the beginning of operations at the SRS. Starting with the original 12 waste tanks in the early 1950's, waste tanks were

constructed in groups as additional capacity was required. Four different designs (Type I, II, III/IIIA, and IV) have been used for the construction of the waste tanks. The design of each type of waste tank was based on the best available professional engineering judgement, proposed use, and progressive operating experience. Table 4-3 provides the location, design type, construction period, and project number for each group of waste tanks.

The waste tanks are used for a variety of functions; such as, waste receipt, settling, aging, process feed holding, and processing. The currently identified potential uses for the waste tanks are described below.

- **HHW Receipt Tanks** - These waste tanks are used to receive HHW generated by SRS operations and to provide radioactive decay of short-lived radioisotopes contained in HHW. Since the radioactive decay of HHW generates a large amount of thermal energy, supplemental cooling is required. The maximum total decay heat for a HHW receipt tank, as well as other cooled tanks, is administratively set at 3,000,000 Btu/hour. Up to 6,000,000 Btu/hour of cooling capacity can be provided for each waste tank cooling system.

- **LHW Receipt Tanks** - These waste tanks are used to receive freshly generated LHW. Currently, these waste tanks also serve as the LHW evaporator feed tanks; there are no waste tanks which are designated solely for this purpose.

- **RBOF/RRF Waste Receipt Tanks** - These waste tanks (Tank 21 and 23) are used to receive the waste stream generated by the RBOF/RRF. This waste stream currently has a different process flow path than the other LHW waste stream. The processing of this waste stream is described in Sections 5.1.3 and 5.2.2.

- **HHW Evaporator Feed Tanks** - These waste tanks are used to feed liquid supernate to the HHW evaporators. Supplemental cooling is required for these waste tanks.

- **LHW Evaporator Feed Tanks** - These waste tanks are used to receive LHW generated by SRS operations and to feed one of the LHW evaporators.

- **HHW Sludge Tanks** - These waste tanks are used to age and hold the accumulated HHW sludges. The sludges from these tanks will eventually be removed and subjected to the sludge processing operations prior to transfer to the DWPF Vitrification Facility.

- **LHW Sludge Tanks** - These waste tanks contained LHW and are currently being used to age and hold the accumulated LHW sludges. The sludges from these tanks will eventually be removed and subjected to the sludge processing operations prior to transfer to the DWPF Vitrification Facility.

- **HHW Concentrate Receipt Tanks** - These waste tanks are used to receive the waste concentrate from the HHW evaporator system and to allow the formation of an immobile salt cake.

- **LHW Concentrate Receipt Tanks** - These waste tanks are used to receive the waste concentrate from one of the LHW evaporator systems and to allow the formation of an immobile salt cake.

- **HHW Salt Cake Tanks** - These tanks are inactive HHW concentrate receipt tanks that are currently being used to age and hold the accumulated immobilized salt cake. The salt cake from these tanks will eventually be redissolved and subjected to the ITP operations.

- **LHW Salt Cake Tanks** - These tanks are inactive LHW concentrate receipt tanks that are currently being used to age and hold the accumulated immobilized salt cake. The salt cake from these tanks will eventually be redissolved and subjected to the ITP operations.

- **ITP Reaction Tank** - This tank (Tank 48) is used to react the dissolved salt cake (salt solution) with process chemicals to precipitate and absorb radionuclides for removal by subsequent filtration.

- **ITP Precipitate Receiver/DWPF Vitrification Feed Tank** - This tank (Tank 49) is used to hold the ITP precipitate slurry prior to transfer to the DWPF Vitrification Facility.

TABLE 4-3

WASTE TANK DATA

Tank Number	Location	Design Type	Construction Period	Project Numbers
1- 8	F	I	1951-1953	8980
9-12	H	I	1951-1953	8980
13-16[a]	H	II	1955-1956	8980 PWO
17-20	F	IV	1958	981031
21-24	H	IV	1962	981089
25-28	F	IIIA	1975-1978	951493 (75-1-a)
29-32	H	III	1967-1970	981232
33-34	F	III	1969-1972	950974
35-37	H	IIIA	1974-1977	951463 (74-1-a)
38-43	H	IIIA	1976-1980	951618 (76-B-a)
44-47	F	IIIA	1977-1980	951747 (77-13d)
48-51[a]	H	IIIA	1978-1981	951828 (78-18-b)

Notes:

[a] Tanks 16 and 50 are not covered by this permit application.

- **ITP Wash Water Tank** - This tank (Tank 22) is used to hold the wash water from the washing of the ITP precipitate slurry.

- **Sludge Washing/DWPF Vitrification Feed Tanks** - These tanks (Tanks 40, 42 and 51) are used to prepare the accumulated tank sludge for subsequent transfer to the DWPF Vitrification Facility. Tanks 40 and 51 also serve as the sludge feed tanks for the DWPF Vitrification Facility.

- **Spent Wash Water (Sludge Processing) Tank** - This tank (Tank 21) is used to hold the spent wash water from the washing of the tank sludge.

The use of a particular tank is determined by its design type, physical location, and processing equipment. An individual waste tank may be used for multiple uses at the same time (e.g.; LHW receipt tank and LHW evaporator feed tank). Table 4-4 identifies the current use for each waste tank; the tank usage may be modified as waste inventories are processed. Should the use of a waste tank be modified, the required process equipment for the new service will be added at that time. These modifications include adding transfer and slurry pumps, associated piping and valves, and instrumentation. Neither the capacity nor the structure of the tank will be changed. These modifications are considered part of normal operations as discussed in Section 4.2.

Additional details for each specific waste tank function are provided in Sections 4.4 (Evaporators), 4.5 (ITP), and 4.6 (Sludge Processing). The following subsections provides the operational

TABLE 4-4

WASTE TANK USAGE

Tank Number	Design Type	Location	Year Constructed	First Used	Current Usage
1[a]	I	F	1952	1954	Inactive, HHW/LHW salt cake tank
2	I	F	1952	1955	Inactive, HHW/LHW salt cake tank
3	I	F	1952	1954	Inactive, HHW/LHW salt cake tank
4	I	F	1952	1961	Inactive, HHW sludge and salt cake tank
5	I	F	1952	1959	Inactive, HHW sludge tank
6	I	F	1952	1964	Inactive, HHW sludge tank
7	I	F	1952	1954	Incidental waste receipt (i.e., F-Area Catch Tank), HHW/LHW sludge tank
8	I	F	1952	1958	Inactive, LHW sludge tank
9[a]	I	H	1953	1955	Inactive, HHW/LHW salt cake tank
10[a]	I	H	1953	1955	Inactive, HHW/LHW salt cake tank
11[a]	I	H	1953	1955	Inactive, HHW sludge tank
12[a]	I	H	1953	1956	Inactive, HHW sludge tank
13[a]	II	H	1956	1959	HHW evaporator feed tank (contains HHW sludge)
14[a]	II	H	1956	1957	Inactive, HHW sludge and salt cake tank
15[a]	II	H	1956	1960	Inactive, HHW/LHW sludge tank

TABLE 4-4

WASTE TANK USAGE

Tank Number	Design Type	Location	Year Constructed	First Used	Current Usage
16[a]	II	H	1956	1960	Tank is currently empty, HHW supernate and sludge removed, tank interior cleaned out, initial annulus cleaning complete, this tank is not covered by this permit application
17[a]	IV	F	1958	1961	Inactive, LWH supernate and salt removed, residual LHW remains
18	IV	F	1958	1958	Inactive, LHW supernate removed, residual LHW sludge remains
19	IV	F	1958	1961	Inactive, LHW supernate removed, residual LHW sludge and salt remains (Most of the tank sludge consists of spent CRC ion exchange resin)
20[a]	IV	F	1958	1960	Inactive, LHW supernate and salt removed, residual LHW sludge remains
21	IV	H	1961	1961	LHW supernate removed, residual LHW sludge remains, currently receives dilute radioactive waste containing only 1-2% solids from RBOF/RRF, will be used in the future to also hold spent wash water from Sludge Processing (spent wash water will be used to redissolve salt cake accumulated in the waste concentrate receipt tanks)
22	IV	H	1962	1965	LHW supernate removed, residual LHW sludge remains, currently used to hold RBOF/RRF wastewater, will be used in the future to hold the spent wash water from the ITP process

TABLE 4-4

WASTE TANK USAGE

Tank Number	Design Type	Location	Year Constructed	First Used	Current Usage
23	IV	H	1962	1963	LHW supernate removed, residual LHW sludge remains, receives dilute radioactive waste containing only 1-2% solids from RBOF/RRF
24	IV	H	1962	1963	Inactive, LHW supernate removed, residual LHW sludge remains (most of the tank sludge consists of spent CRC ion exchange resin), tank also contains RBOF/RRF wastewater. This tank contains a volume of waste water ballast.
25	III	F	1978	1980	HHW/LHW concentrate receipt tank
26	III	F	1978	1980	Fresh LHW receipt tank and LHW evaporator feed
27	III	F	1978	1980	HHW/LHW concentrate receipt tank, also receives incidental wastes (i.e., ion exchange resins from the CRC)
28	III	F	1978	1980	HHW/LHW concentrate receipt tank
29	III	H	1970	1971	HHW concentrate receipt tank
30	III	H	1970	1974	HHW concentrate receipt tank
31	III	H	1970	1972	HHW concentrate receipt tank
32	III	H	1970	1971	HHW receipt tank, future HHW evaporator feed tank (242-25H evaporator system)
33	III	F	1969	1969	HHW receipt tank
34	III	F	1972	1972	HHW receipt tank

TABLE 4-4

WASTE TANK USAGE

Tank Number	Design Type	Location	Year Constructed	First Used	Current Usage
35	III	H	1976	1977	HHW receipt tank (future HHW concentrate receipt tank)
36	III	H	1977	1977	HHW concentrate receipt tank (future HHW receipt tank)
37	III	H	1977	1978	HHW concentrate receipt tank
38	IIIA	H	1979	1981	LHW concentrate receipt tank
39	IIIA	H	1979	1982	HHW receipt tank
40	IIIA	H	1979	1986	Sludge processing/DWPF Vitrification sludge feed
41	IIIA	H	1979	1982	LHW concentrate receipt tank
42	IIIA	H	1979	1982	Sludge processing (wash tank and aluminum dissolution)
43	IIIA	H	1979	1982	Fresh LHW receipt tank and LHW evaporator feed
44	IIIA	F	1980	1982	LHW concentrate receipt tank
45	IIIA	F	1980	1982	LHW concentrate receipt tank
46	IIIA	F	1980	----	Emergency spare tank (empty)
47	IIIA	F	1980	1980	LHW concentrate receipt tank, also used to receive waste transported by bulk tank truck (i.e., filter backwash waste from the reactor areas and cold runs wastewater form the DWPF Vitrification Facility).
48	IIIA	H	1981	1983	ITP reaction tank
49	IIIA	H	1981	1983	ITP precipitate receiver/DWPF Vitrification feed tank

TABLE 4-4

WASTE TANK USAGE

Tank Number	Design Type	Location	Year Constructed	First Used	Current Usage
50	IIIA	H	1981	1983	ITP filtrate receiver/F/H ETF waste concentrate receiver/Z-Area SMDF feed tank (this tank is permitted under SCDHEC Permit #14520)
51	IIIA	H	1981	1986	Sludge processing/DWPF Vitrification sludge feed

Source: WSRC, 1990A.

Notes: [a] Has one or more known cracks in primary tank shell.

history and a structural design summary for each type of waste tank. The specifications for the waste tanks (including structural design, construction and testing, cooling system, ventilation systems, and instrumentation) are provided in Section 7.4.

4.7.1 Type I Waste Tanks

Type I tanks (designated as Tanks 1 to 12) were constructed during 1952 and 1953 as part of the original handling, processing, and interim storage plan for liquid waste. All Type I tanks are presently being used to hold sludge or salt cake and no longer receive fresh waste except for Tank 7 which receives incidental wastes from a catch tank. Tanks 1 to 8 are located in the F Area and Tanks 9 to 12 are located in the H Area.

The Type I waste tank design is summarized in Table 4-5 and illustrated in Figure 4-20. In general, Type I tanks have a closed top primary tank shell which is erected within a reinforced concrete vault. The primary tank shell (wall, top and bottom) is constructed from 1/2 inch thick carbon steel (ASTM A285-50T Grade B, firebox quality). The primary tank shell is 75 feet in diameter, 24-1/2 feet in height and has a capacity of 750,000 gallons.

The primary tank shell is set within a carbon steel circular "pan" which is 5 feet deep and has a diameter 5 feet larger than the primary tank. The pan provides secondary containment should the primary tank shell leak.

TABLE 4-5

TYPE I WASTE TANKS
SUMMARY DESIGN DESCRIPTION

Design Volume:	750,000 gallons
Primary Tank Shell:	Closed top construction - 75' D x 24-1/2' H set on a 3" grout layer. Material of construction -carbon steel (ASTM A285-50T Grade B, firebox quality). Thickness -1/2" throughout. Constructed in accordance with Section VIII of the 1949 ASME Boiler Code for Unfired Pressure Vessels. The steel plate was not made by the rimmed process.
Cooling:	36 parallel coils (2" diameter schedule 40 carbon steel seamless pipe) supported from the roof, plus horizontal coils across the tank bottom.
Secondary Containment:	Saucer construction - 80' D x 5' H set on 3" grout layer. Material of Construction - carbon steel (ASTM A285-50T, Grade B, firebox quality). Thickness - 1/2" throughout. Construction in accordance with Section VIII of the 1949 ASME Boiler Code for Unfired Pressure Vessels. The steel plate was not made by the rimmed process.
Roof Support:	Twelve 2.0' O.D. 1/2" thick seamless carbon steel (ASTM A53, Grades A or B) pipe columns with flared capitals; columns are filled with concrete and supported on primary tank shell bottom.
Concrete Vault:	22" thick wall and roof; 30" thick floor; all joints have key with copper water stop. The concrete vault has waterproofing on the outside of the walls, on the top of the concrete roof, and under the mat foundation. The vault is designed for a water table to be at the top of the tank. The water table in F Area is below the tank floor and at the top of the tanks in H Area.
Radiation Shielding:	9' thick layer of earth on top of concrete roof.
Quality Control:	All welds radiographed, hydrostatic test of primary and secondary vessels.
Location:	Tanks 1-8 are in F Area. Tanks 9-12 are in H Area.

Sources: Du Pont, undated; Legler, 1988; and McNatt, 1979.

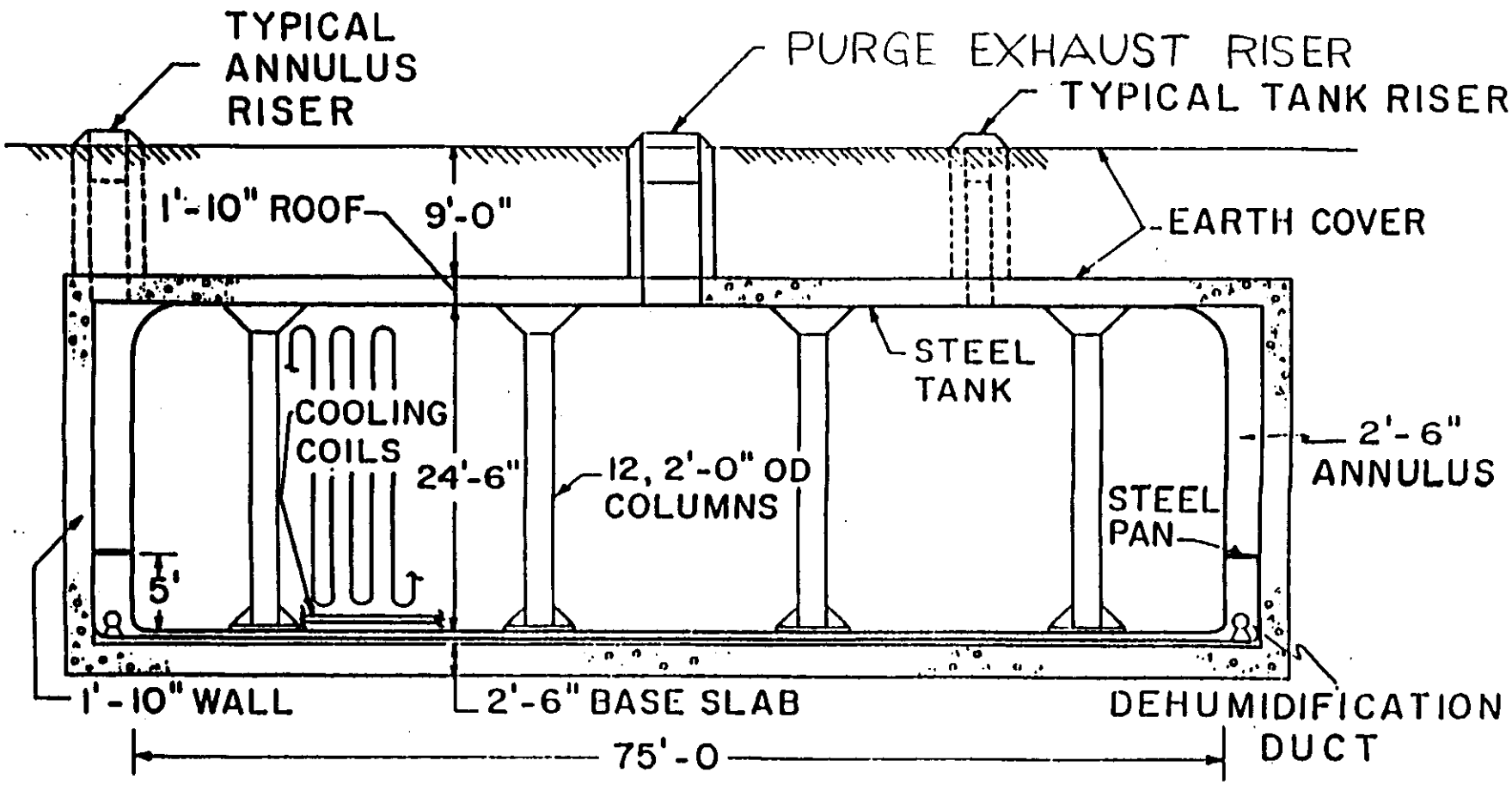

CAD NO.	TITLE:		NO SCALE
SE5-2-2006189		FIGURE 4-20 TYPICAL TYPE I WASTE TANK	6000-44-3190W

4.7.2 Type II Waste Tanks

The Type II tanks were constructed in 1955 and 1956. These waste tanks are numbered 13 through 16. All Type II tanks are located in the H-Area HLW Tank Farm. Tanks 14 and 15 are inactive and are being used to hold sludge and salt cake. Tank 13 is the HHW evaporator feed tank and actively receives aged waste for evaporation. Tank 16 has been removed from service as a result of leakage. Tank 16 is being addressed under the corrective action provisions (i.e., RFI) of the SRS plantwide RCRA Part B Permit and is therefore not addressed in this permit application.

The Type II waste tank design is summarized in Table 4-6 and illustrated in Figure 4-21. The primary tank shell is a closed top cylindrical steel tank with a diameter of 85 feet, a height of 27 feet, and a capacity of 1,030,000 gallons. The primary tank is fabricated from thick open hearth carbon steel (ASTM designation, A285-50T, Grade B, firebox quality). The top and bottom of the primary tank shell are 1/2 inch thick. The tank walls are 5/8 inch thick. The upper and lower knuckle plates are 9/16 inch thick and 7/8 inch thick, respectively.

The primary tank shell is set within a carbon steel circular "pan" which is 5 feet deep and has a diameter 5 feet larger than the primary tank. The pan provides secondary containment should the primary tank shell leak.

TABLE 4-6

TYPE II WASTE TANKS
SUMMARY DESIGN DESCRIPTION

Design Volume:	1,030,000 gallons
Primary Tank Shell:	Closed top construction - 85' D x 27' H set on a 1" thick sand bed. Material of construction - open hearth carbon steel (ASTM A285-50T Grade B, firebox quality). Thicknesses: top/bottom - 1/2"; upper knuckle plate - 9/16"; wall - 5/8"; lower knuckle plate - 7/8". Constructed in accordance with Section VIII of the 1952 ASME Boiler Code for Unfired Pressure Vessels. The steel was not made by the rimmed process.
Cooling:	44 parallel coils supported from the roof plus horizontal coils across the tank bottom (2" diameter ASTM A106 schedule 40 carbon steel seamless pipe).
Secondary Containment:	Saucer construction - 90' D x 5' H set on a 1" thick sand bed. Material of construction - open hearth carbon steel (ASTM A285-50T Grade B, firebox quality). Thicknesses - 1/2" throughout. Constructed in accordance with Section VIII of the 1952 ASME Boiler Code for Unfired Pressure Vessels. The steel was not made by the rimmed process.
Roof Support:	One central concrete column with flared capital supported on primary tank shell bottom; clad with 1/2" thick carbon steel (ASTM A285-50T Grade B, firebox quality).
Concrete Vault:	33" thick wall; 45" thick roof; 42" thick floor; only bottom joints have key with copper waterstops. The vault is designed for a water table 1' above the floor and to withstand hydrostatic uplift if fully submerged.
Radiation Shielding:	45" thick concrete roof; no earth overburden.
Quality Control:	All welds in primary tank bottom and walls were radiographed. Hydrostatic test of primary and secondary vessels.
Location:	Tanks 13-15 are in H Area.

Sources: Du Pont, undated; Legler, 1988; and McNatt, 1979.

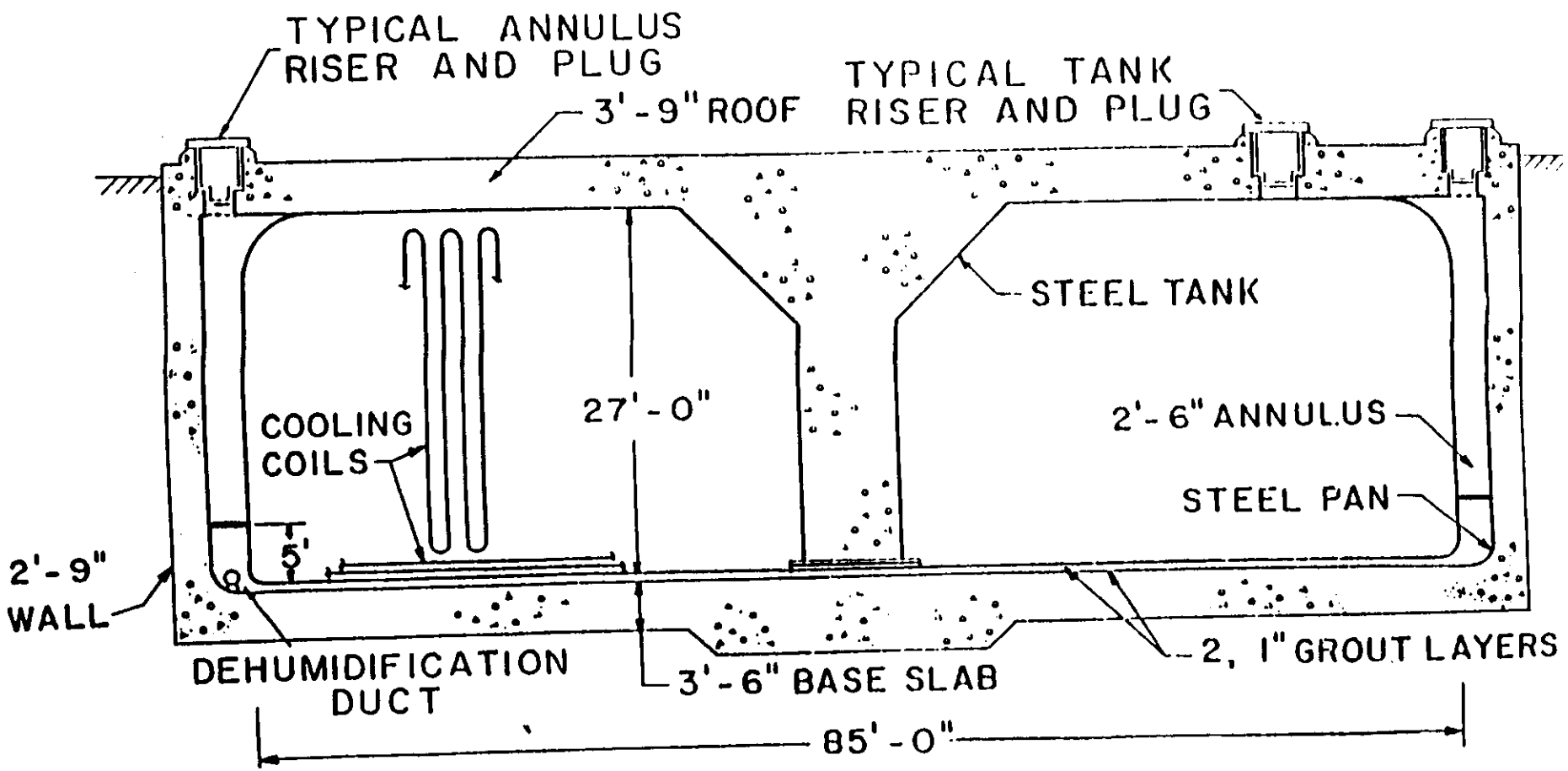

CAD NO.	TITLE:	NO SCALE
SE5-2-2006189	FIGURE 4-21 TYPICAL TYPE II/IIA WASTE TANK	6000-44-3190W

4.7.3 Type III and IIIA Waste Tanks

The F and H-Area HLW Tank Farms contain 26 Type III and IIIA waste tanks designated as Tanks 25 to 51. Tanks 29 through 32 (Type III) were built in H Area between 1967 and 1970. Tanks 33 and 34 (Type III) were built in F Area between 1969 and 1972. Tanks 35 to 37 (Type IIIA) were completed in H Area between 1976 and 1978. Tanks 25 to 28 (Type IIIA) in F Area were completed in 1978. Tanks 38 to 43 and Tanks 48 to 51 (Type IIIA) we completed in H Area between 1979-1981. (Tank 50 is already permitted under SCDHEC #14520 and is therefore not addressed in this permit application.) Tanks 44 to 47 (Type IIIA) were constructed in F Area in 1980.

Type III and IIIA tanks are the most versatile and have the best operating history (i.e., no leaks) of all the SRS tank designs. Type III and IIIA tanks are used for the majority of the waste processing functions.

The Type III and IIIA waste tanks have similar designs. The Type III/IIIA waste tank design is summarized in Table 4-7 and illustrated in Figure 4-22. The primary tank shell is a closed top cylindrical steel tank which is a closed top cylindrical steel tank which is 85 feet in diameter, 33 feet in height, and has a capacity of 1,300,000 gallons. The primary tank shell is constructed from 1/2, 5/8, and 3/4 inch thick open hearth carbon steels. Tanks 29 to 34 are fabricated from ASTM A516 Grade 70, hot-rolled steel. Tanks 25 to 28 and 35 to 37 are fabricated from ASTM A516 Grade 70, normalized steel. Tank 38 to 51 are fabricated from ASTM A537 Class I steel. All three of these steels have essentially the same composition.

TABLE 4-7

TYPE III AND IIIA WASTE TANKS[a]
SUMMARY DESIGN DESCRIPTION

Design Volume:	1,300,000 gallons
Primary Tank Shell:	Closed top construction - 85; D x 33' H set on a 6" thick bed of insulating concrete grooved for air flow. Material of Construction - open hearth carbon steel[b]. Thicknesses: top/bottom - 1/2" and lower knuckle plate - 3/4"; outer wall - 3/4" (lower), 5/8" (middle), and 1/2" (upper); center column wall - 5/8" (lower), lower knuckle plate - 5/8", and 1/2" (upper).
Cooling[a]:	Tanks 29-35 have cooling coil bundles. Type IIIA Tanks 25-28 and 36-51 have vertical cooling coils which are supported from the tank bottom. Bottom cooling is provided by forced air flow through grooved channels in the concrete beneath the tank.
Secondary Containment:	Closed top constuction - 90' D x 33' H. Material of construction - open hearth carbon steel (ASTM A516 Grade 70, hot-rolled). Thicknesses - 3/8" throughout.
Roof Support:	One central concrete column with flared capitals supported on foundation pad; annulus space around column.
Concrete Vault:	Thicknesses: wall - 30", roof - 48", floor - 42".
Radiation Shielding:	48" thick concrete roof; no earth overburden.
Quality Control:	Welds radiographed; hydrostatic test of primary vessel.
Location:	F Area Tanks 33-34 (III), and 25-28, 44-47 (IIIA) H Area Tanks 29-32 (III), and 35-43, 48-51 (IIIA)

Sources: Du Pont, undated; Legler, 1988; and McNatt, 1979.

Notes:

[a] The main differences between Type III and Type IIIA are that Type IIIA tanks have: (1) a different pattern of cooling grooves at the bottom, (2) tank top sloped to drain rainwater, (3) permanently mounted bottom-supported vertical cooling coils (except for Tank 35 which has cooling coil bundles), and (4) normalized steel to increase resistance to brittle fracture.

[b] The plates for the primary tanks are open hearth steels made to fine grain practice. Tanks 29-34 are ASTM A516 Grade 70, hot-rolled steel. Tanks 25-28 and 35-37 are ASTM A516 Grade 70, normalized steel. Tanks 38-51, are ASTM A537 Class I steel. All three steels have essentially the same composition. The normalizing heat treatment (analogous to annealing) optimizes notch toughness and hence increases resistance to brittle fracture. ASTM A537 Class I is also normalized steel and has lower maximum concentrations for several common impurities.

NOTES: TYPE IIIA TANKS HAVE DISTRIBUTED COOLING COILS
TYPE III TANKS HAVE INSERTABLE BUNDLE COOLERS

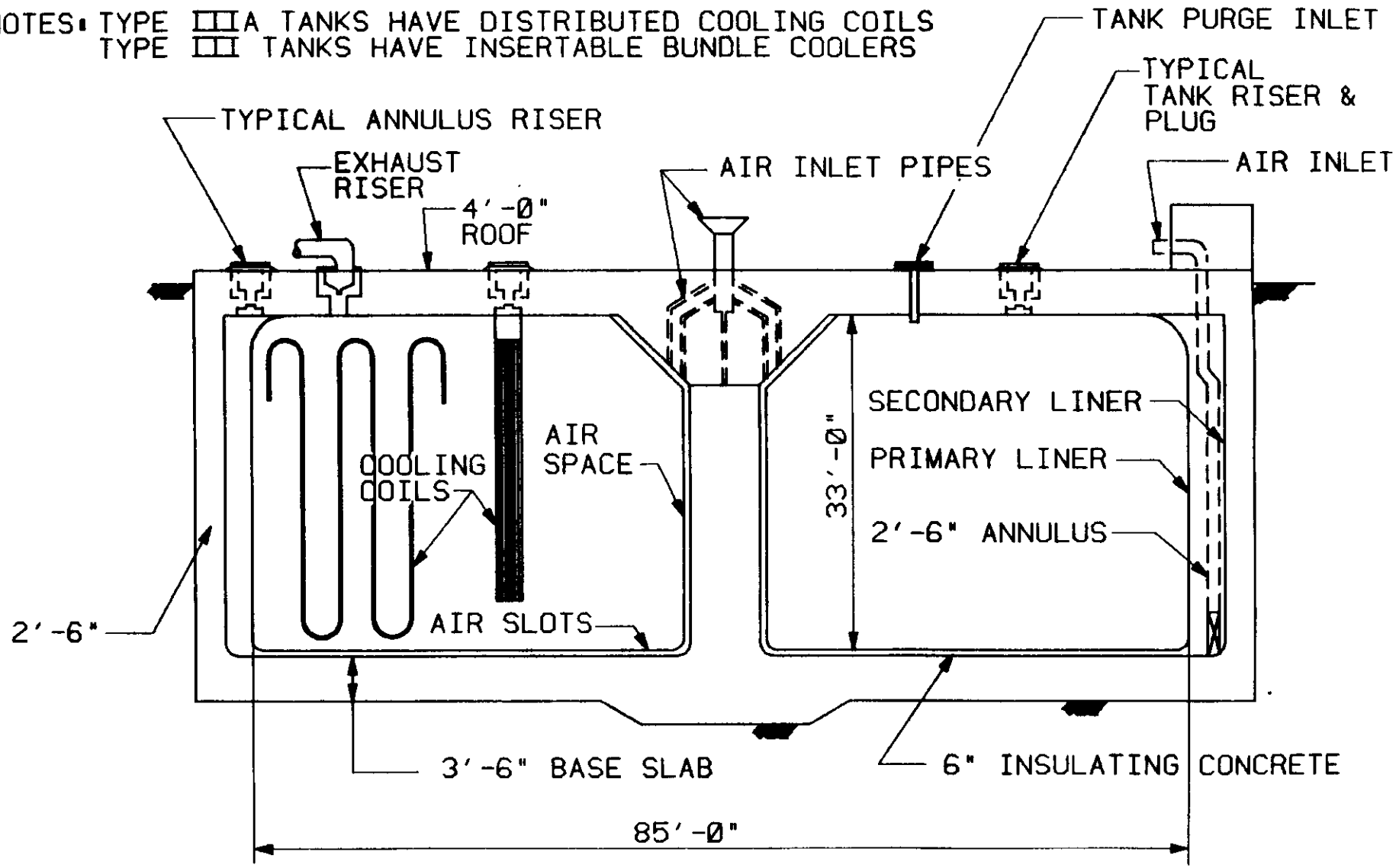

CAD NO.	TITLE:	NO SCALE
SE5-2-2006189	FIGURE 4-22 TYPICAL TYPE III/IIIA WASTE TANK	6000-44-3190W

Unlike Type I and II tanks, Type III and IIIA tanks have full-height secondary containment (doubled walled). The primary tank shell is completely enclosed by a secondary carbon steel shell. The secondary shell is 3/8 inch thick and has a diameter which is 5 feet larger than the primary tank shell.

4.7.4 Type IV Waste Tanks

Eight Type IV tanks (designated as Tanks 17 to 24) are located within the F and H-Area HLW Tank Farms. Tanks 17 to 20 are located in the F Area and were constructed in 1958. Tank 21 is located in the H Area and was completed in 1961. Tanks 22 to 24 are located in the H Area and were fabricated during 1962.

Tanks 17 to 20 and 24 currently contain residues resulting from the transfer of LHW radioactive wastewaters and are scheduled to be removed from service. Tanks 21 and 22 are used to hold the spent wash water from the sludge processing and ITP operations, respectively. Tanks 21 and 23 will continue to be utilized to receive the RBOF/RRF waste streams.

The Type IV waste tank design is summarized in Table 4-8 and illustrated in Figure 4-23. Type IV tanks are steel-lined cylindrical tanks with concrete walls, a concrete domed roof, and a dome ring. Type IV tanks have a capacity of 1,300,000 gallons, a diameter of 85 feet, and a height of 34-1/4 feet. Carbon steel plates, 3/8 inch thick, were utilized for the side walls and the floors of the primary tank shell. The knuckle plates at the

TABLE 4-8

TYPE IV WASTE TANKS
SUMMARY DESIGN DESCRIPTION

Design Volume:	1,300,000 gallons
Primary Tank Shell:	Open top construction - 85' D x 34-1/4' H, plus a domed concrete roof rising 11'. Material construction - carbon steel[a,b]. Thicknesses: sides/bottom - 3/8"; lower knuckle plate - 7/16"; no metal top (the unclad concrete dome is the top).
Cooling:	None
Roof Support:	Domed concrete 7-10" thick
Concrete Vault:	15" thick multiple layer concrete wall with 8" thick vermiculite exterior layer
Radiation Shielding:	F Area 32" thick earth cover over concrete dome H Area 44" thick earth cover over concrete dome
Quality Control:	All welds radiographed. The steel tank bottom, including flanged edge at perimeter of tank, was vacuum leak tested. Primary tanks were hydrostatically tested before enclosing with concrete.
Location:	Tanks 17-20 are in F Area Tanks 21-24 are in H Area

Sources: Du Pont, undated; Legler, 1988; and McNatt, 1979.

Notes:

a The steel liner plate for the F Area tanks (17-20) is open hearth ASTM A285-54T Grade B, firebox quality carbon steel that is suitable for arc welding. The steel was not made by the rimmed process. The liner was fabricated according to Section VIII of the 1952 ASME Boiler Code for Unfired Pressure Vessels.

b The steel liner plate for the H Area tanks (21-24) consists of open-hearth ASTM A212-57T Grade B, minimum carbon 0.18%, firebox quality carbon steel which is suitable for submerged arc welding. The steel was not made by the rimmed process. The liner was fabricated according to Section VIII of the 1956 ASME Boiler Code for Unfired Pressure Vessels.

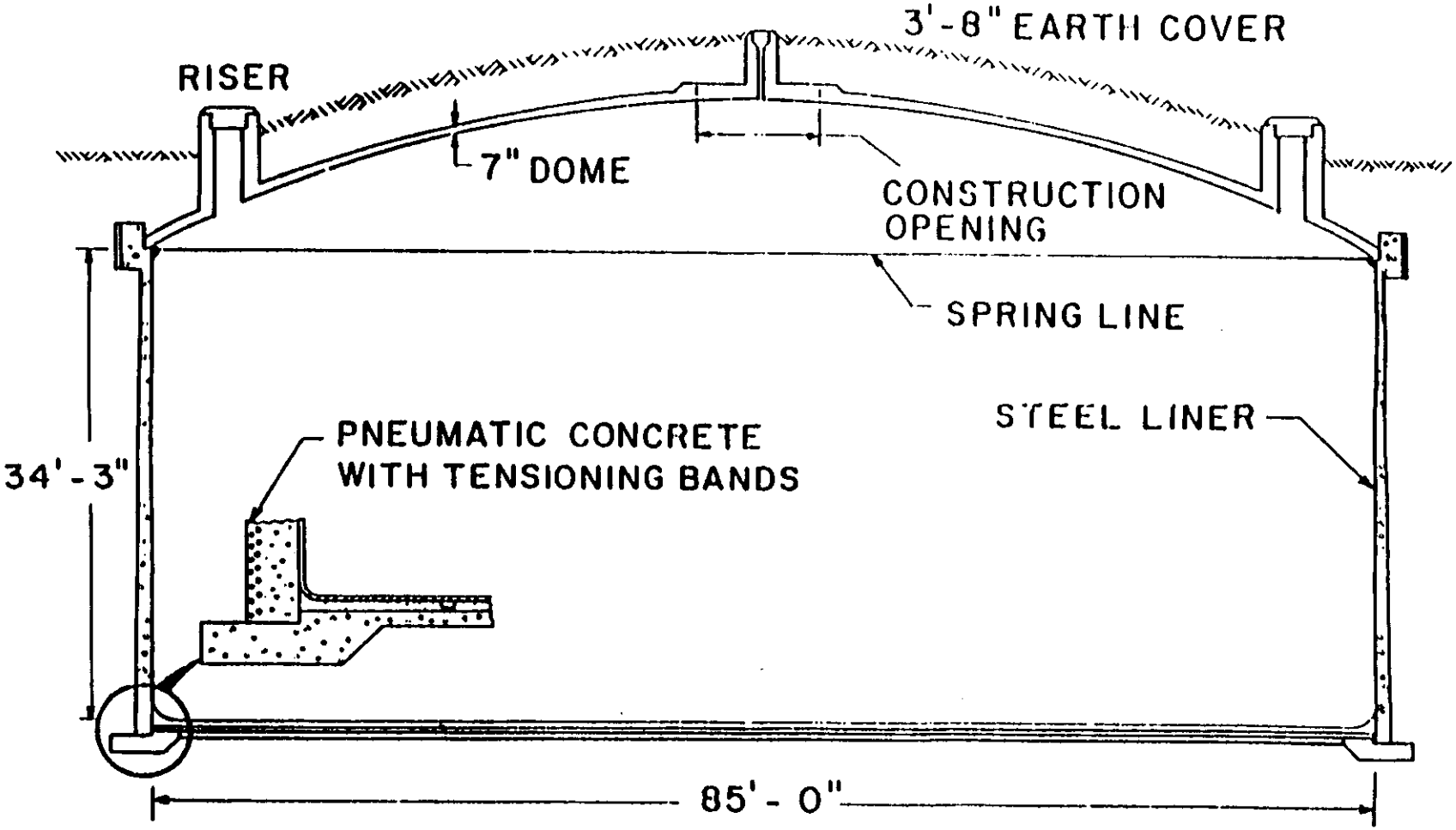

CAD NO.	TITLE:		NO SCALE
SE5-2-2006189		FIGURE 4-23 TYPICAL TYPE IV WASTE TANK	6000-44-3190W

junction between the tank bottom and sidewalls are 7/16 inch thick and rest on a concrete tank ring. The steel utilized for Tanks 17 to 20 conforms to ASTM A285-54T Grade B (firebox quality) standards, suitable for arc welding. The steel used for Tanks 21 to 24 conforms to ASTM A212-57T Grade B (firebox quality) standards.

Type IV waste tanks are not erected within a secondary steel structure. Secondary containment is provided by the concrete layer which surrounds the primary steel shell.

4.8 Waste Transfer Operations

A waste transfer system consisting of pipelines, transfer and jet pumps, pump pits, and diversion boxes is used to transport wastes within each Tank Farm (i.e., F Area and H Area) and between the various integrated treatment facilities (i.e., F and H-Area HLW Tank Farms, S-Area DWPF Vitrification Facility, Z-Area SMDF, and F/H ETF). A layout of the waste transfer system for the F and H-Area HLW Tank Farms is shown as Figures 4-24 and 4-25, respectively (contained in pocket sleeves). The transfer system between the various integrated treatment facilities are known as the interarea transfer lines (IALs). The IALs include:

- F/H Interarea Transfer Line,
- H/S Interarea Transfer Line, and
- H/Z Interarea Transfer Line.

Of the above mentioned transfer lines, the F/H and H/S IALs are addressed in this section. The H/Z IAL is already permitted under SCDHEC Industrial Wastewater Permit #14338. A layout for the above IALs are shown on Figure 2-2. A more detailed layout drawing for the F/H and H/S IALs is provided as Figures 2-3, 2-4 and 2-5 (contained in pocket sleeves).

The waste transfer system is designed to transfer waste from the originating source to a variety of locations. This flexibility is accomplished by routing the waste transfer lines to centrally located structures (called "diversion boxes") where specially fabricated pipe segments (called "jumpers") are installed to complete the desired waste transfer path. The design of the waste transfer system allows a wide range of operations. Administrative procedures are established and followed to ensure that the transfer of wastes is conducted safely and properly.

Upon identification of a specific transfer need, the necessary connections to provide a continuous path are made and the waste transfer is initiated. If the transfer operation has never been performed before, transfer pumps and/or specifically fabricated jumpers may need to be installed. Where possible existing equipment will be utilized; otherwise, equivalent equipment will be fabricated and installed. The movement and installation of this equipment (i.e., fabrication/installation of a new jumper, installation of a transfer pump or jet pump within an existing waste tank, and using the existing waste lines to provide a new transfer route) is considered part of normal operations. These normal operations are described in further detail in Section 4.2.

Waste may be transferred either in batches or as part of regular treatment operations (i.e., evaporation and ITP). The majority of the waste transfers are conducted in batches. In addition, several different transfer operations can occur simultaneously.

Some transfers may take a relatively short period of time to complete while others may extend over several days. The volume of waste to be transferred is determined prior to the initiation of each transfer to ensure that the receiving waste tank has sufficient capacity. If sufficient capacity is not available, the transfer will not be performed. Since the volumes are determined prior to initiation of the transfer, the transfer rate is not critical. Transfer rates generally range from 30 to 100 gallons per minute. Under these conditions, the maximum change in the tank liquid level will be approximately 2.5 inches per hour. This incremental liquid level change, along with the monitoring of liquid levels within the waste tanks, allow operators ample time to make any necessary adjustments during transfer operations.

Unlike a traditional wastewater treatment facility, the large capacity of the waste tanks in comparison to the transfer rates allows transfer operations to be conducted in batches. In addition, the SRS control of the waste generation facilities, as well as the waste treatment facilities, allows specific production and/or treatment processes to be suspended until sufficient capacity is available.

Each component of the waste transfer system (i.e., transfer lines, diversion boxes, valve boxes, and transfer and jet pumps), F/H IAL, and H/S IAL are described in the sections that follow.

4.8.1 Waste Transfer Lines

The waste transfer lines for the F and H-Area HLW Tank Farms are shown on Figures 4-24 and 4-25, respectively. Several waste transfer lines are used to transfer wastes from the various generating facilities to F and H-Area HLW Tank Farms. These waste lines and scope of this permit

application were described in Section 1.1.

The waste transfer lines are constructed from various sizes of stainless and carbon steel pipe. The various pipes used for each transfer line are identified on Figures 4-24 and 4-25. The specifications for each type of transfer pipe is provided in Section 7.5. The most commonly used pipe is 3-inch diameter, schedule 40 stainless steel. Each waste transfer line is shielded to protect against radiation exposure. Normally, waste transfer lines are placed underground for shielding. When pipelines are required to be placed near the surface or above ground lead is used for shielding to protect against radiation exposure.

All transfer lines have secondary containment structures (i.e., carbon steel pipe, stainless steel pipe, concrete encasement, or transite pipe) to direct any potential leaks to central locations for collection and detection purposes. The older transfer lines were placed within concrete encasements and cement-asbestos (i.e., transite) ducts. The newer transfer lines are contained within carbon steel pipes. The most commonly used secondary containment structure is a carbon steel pipe.

The secondary containment jacket provides the means to contain and detect any leakage from the transfer line. A leak detection box with a conductivity probe is provided at the low points of the secondary containment structure. Should a leak occur, the conductivity probe would activate an alarm system to notify an operation. Specific details for the leak detection system are contained in Appendix C.

The various types of waste transfer lines and secondary containment are described below. The locations of these various combinations are identified on Figures 4-24 and 4-25. Specific details (i.e., origin/destination, line service, line type, line diameter, approximate line length, and approximate elevation change) regarding these transfer lines are provided in Tables 4-9, 4-10, and 4-11 for the F-Area HLW Tank Farm, H-Area HLW Tank Farm, and the IALs, respectively.

Type I - Stainless Steel Transfer Pipe in a Concrete Encasement. This combination consists of stainless steel pipe in a covered, reinforced concrete, trench-like encasement which is usually below grade.

The original waste transfer lines and encasements were of this construction. Figure 4-26 depicts a cross-section of the waste lines between Building 221-H and HDB1. Other encasements of this type differ only with respect to size, pipe support, and other minor details.

The encasements are waterproofed to prevent infiltration of ground water. However, ground water is known to infiltrate into the secondary containment structure, either through cracks at the covers or joints, or cracks in the concrete. The infiltration rate is greater in H Area where some of the transfer lines are below the water table. This ground water drains to a catch tank. In F-Area, the water is transferred to a waste tank (currently Tank 7). In H-Area, water in the catch tank is transferred to either the F/H process sewer, or a tank truck for transfer to a waste tank. SRS plans to add a jumper to HDB-1 to provide a route from the H-Area catch tank to a waste tank.

Type II - Stainless Steel Transfer Pipe in a Carbon Steel Jacket. This configuration is shown in Figure 4-27 and consists of a stainless steel waste transfer line inside a carbon steel containment pipe. All pipe joints (transfer lines and containment pipes) are welded and tested. The portion of carbon steel containment pipe in direct contact with soil is protected against corrosion either by a polyethylene film wrap or by a bituminous coating. In some cases, the carbon steel pipe is protected by embedment in Gilsotherm™ or Gilsulate™ (American Gilsonite Co.).

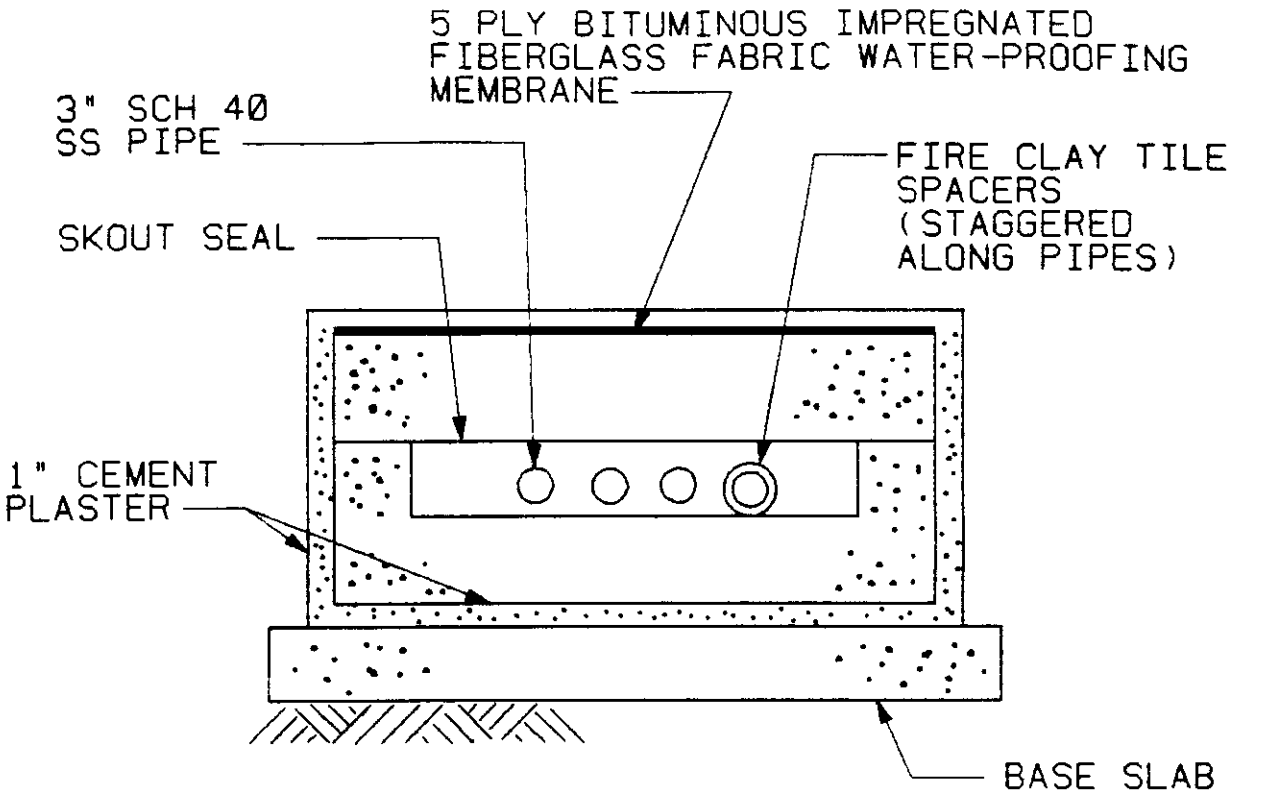

CROSS SECTION

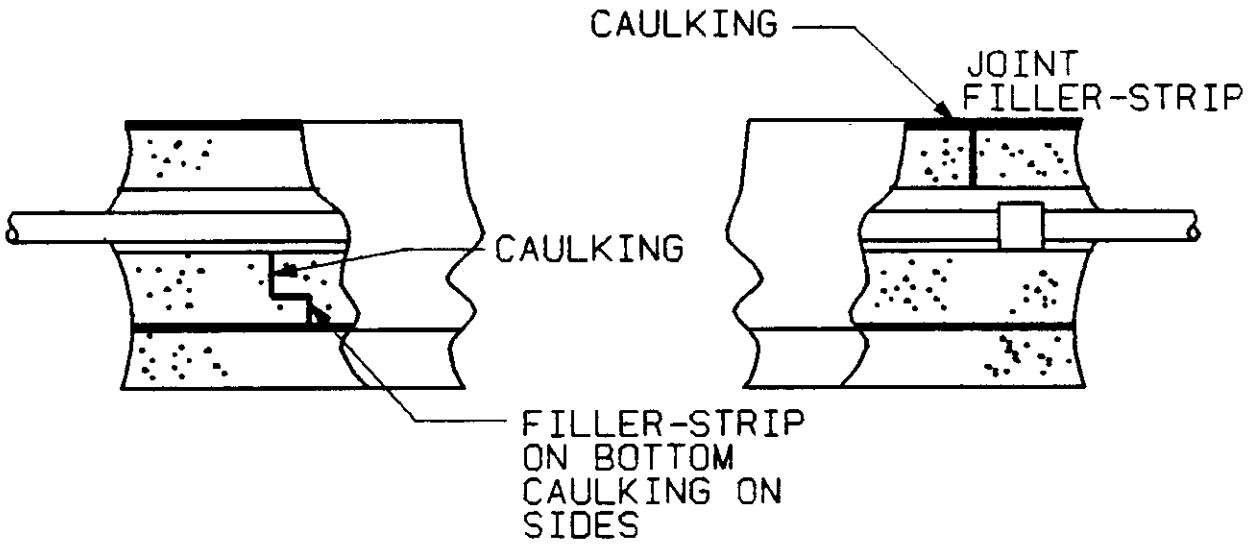

TYPICAL BOTTOM AND SIDE EXPANSION JOINT

TYPICAL COVER SLAB BUTT JOINT

CAD NO.	FIGURE 4-26 TYPE I LINE ENCASEMENT (SS PIPE IN CONCRETE TRENCH)	NO SCALE
W2020535		6000-44-3190W

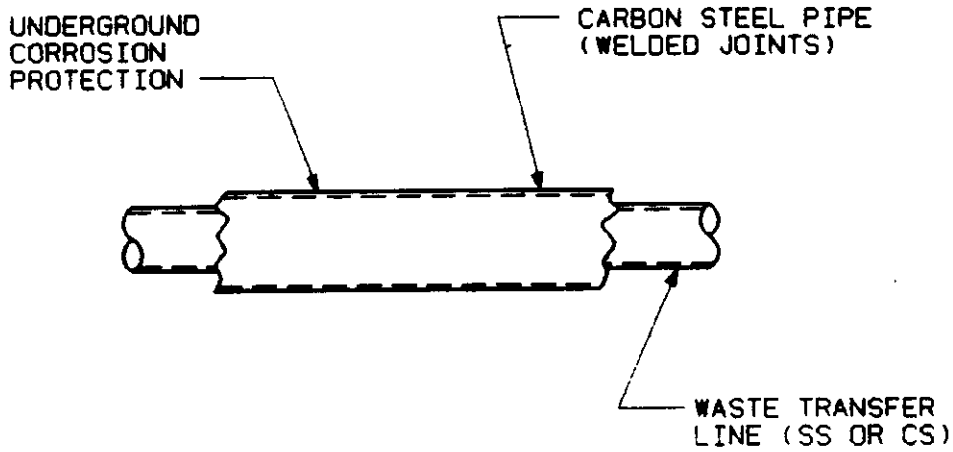

CAD NO.	FIGURE 4-27 TYPE II & IIA LINE ENCASEMENT (SS OR CS PIPE IN CARBON STEEL JACKET)	NO SCALE
W2020335		6000-44-3190W

TABLE 4-9

F-AREA HLW TANK FARM TRANSFER LINES

LINE NUMBER	LINE ORIGIN/DESTINATION		LINE SERVICE	LINE TYPE	TRANSFER LINE DIAMETER (INCHES)	APPROXIMATE LINE LENGTH (FEET)	APPROXIMATE ELEVATION CHANGE (FEET)
1E	TANK 20	TANK 18	PROCESS	TYPE II	3	50	9
2E	TANK 17	TANK 18	PROCESS	TYPE II	3		
3E	TANK 19	TANK 17	PROCESS	TYPE II	3		
4E	TANK 18	FDB1 [7]	PROCESS	TYPE I / II	3		
5E	FDB1 [28]	TANK 18	PROCESS	TYPE III	3		
6E	TANK 19	TANK 18	PROCESS	TYPE II	3		
7E	FDB1 [29]	TANK 17	PROCESS	TYPE III	3		
33E	FDB1 [11]	TANK 1	PROCESS	TYPE I	3	90	1
34E	FDB1 [12]	TANK 2	PROCESS	TYPE I	3	80	2
35E	FDB1 [13]	TANK 3	PROCESS	TYPE I	3	190	3
36E	FDB1 [14]	TANK 4	PROCESS	TYPE I	3	180	2
37E	FDB1 [15]	TANK 5	PROCESS	TYPE I	3	280	4
38E	FDB1 [16]	TANK 6	PROCESS	TYPE I	3	280	4
39E	FDB1 [17]	TANK 7	PROCESS	TYPE I	3	380	6
40E	FDB1 [18]	TANK 8	PROCESS	TYPE I	3	380	6
42E	FDB1 [20]	TANK 1	PROCESS	TYPE I	3	70	2
43E	FDB1 [21]	TANK 2	PROCESS	TYPE I	3	60	1
44E	FDB1 [22]	TANK 3	PROCESS	TYPE I	3	180	3
45E	FDB1 [23]	TANK 4	PROCESS	TYPE I	3	160	2
46E	FDB1 [24]	TANK 5	PROCESS	TYPE I	3	270	4
47E	FDB1 [25]	TANK 6	PROCESS	TYPE I	3	270	4
48E	FDB1 [26]	TANK 7	PROCESS	TYPE I	3	360	6
49E	FDB1 [27]	TANK 8	PROCESS	TYPE I	3	370	6
300E	LINE 109	TANK 18	PROCESS	TYPE II			
73	TANK 26	TANK 44	PROCESS	TYPE II	3	380	2
74	TANK 26	TANK 45	PROCESS	TYPE II	3	240	1
75	TANK 26	TANK 46	PROCESS	TYPE II	3	380	1
76	TANK 26	TANK 47	PROCESS	TYPE II	3	520	1
101	FDB4 [5]	FPP2 [6] PUMP INLET	PROCESS	TYPE II	3	40	1
102	FDB2 [28]	FPP1 [2]	PROCESS	TYPE II	3	40	1
102	FDB4 [2]	FPP3 [6] PUMP INLET	PROCESS	TYPE II	3	50	1
103	FPP1 [4]	FDB2 [36]	PROCESS	TYPE II	3	30	6
104	FDB4 [9]	FDB3 [9]	PROCESS	TYPE II	3	170	0
104	FDB2[27]	FDB1[8]	PROCESS	TYPE I / II	3	360	
105	TANK 27	FDB4 [11]	PROCESS	TYPE II	3		
106	FPP1 [5]	FDB2 [35]	PROCESS	TYPE II	3	30	9
106	TANK 28	FDB4 [10]	PROCESS	TYPE II	3		

TABLE 4-9

F-AREA HLW TANK FARM TRANSFER LINES

LINE NUMBER	LINE ORIGIN/DESTINATION		LINE SERVICE	LINE TYPE	TRANSFER LINE DIAMETER (INCHES)	APPROXIMATE LINE LENGTH (FEET)	APPROXIMATE ELEVATION CHANGE (FEET)
107	TANK 26	FDB4 [13]	PROCESS	TYPE II	3	120	10
108	FDB4 [16]	TANK 25	PROCESS	TYPE II	3	240	
109	FDB2 [37]	LINE 3754	PROCESS	TYPE IV	3	120	0
109/3754	VALVE BOX	FDB2 [33]	PROCESS	TYPE II	3		
109	FDB4 [12]	TANK 26	PROCESS	TYPE II	3	120	10
110	TANK 7	FDB2 [31]	PROCESS	TYPE IV	3	320	
111	FDB2 [30]	FDB3 [16]	PROCESS	TYPE II	3	60	0.5
112	FDB3 [17]	FDB2 [29]	PROCESS	TYPE II	3	60	1
114	FDB1 [30]	FPP1 [1A]	PROCESS	TYPE II	3	670	7
151	FPP2 [5] PUMP OUTLET	FDB4 [6]	PROCESS	TYPE II	3	50	2
151	TANK 33	FDB3 [4]	PROCESS	TYPE II	3	200	1
152	FDB3 [3]	TANK 33	PROCESS	TYPE II	3	200	1
152	FPP2 [7] TRANSFER JET	FDB4 [4]	PROCESS	TYPE II	3	20	2
156	FDB3 [2]	TANK 34	PROCESS	TYPE II	3	280	1
157	TANK 34	FDB3 [1]	PROCESS	TYPE II	3	280	1
161	FDB2 [32]	FDB3 [15]	PROCESS	TYPE II	3	70	1
201	FPP3 [5] PUMP OUTLET	FDB4 [3]	PROCESS	TYPE II	3	50	2
202	FPP3 [7] TRANSFER JET	FDB4 [1]	PROCESS	TYPE II	3	50	2
210	TANK 4	VALVE BOX	PROCESS	TYPE II	3	280	6
211	TANK 3	TANK 7	PROCESS	TYPE II	3	240	5
212	TANK 2	TANK 7	PROCESS	TYPE II	3	420	7
213	TANK 1	TANK 7	PROCESS	TYPE II	3	410	7
397	TANK 17	TANK 18	PROCESS	TYPE III	3	50	0
397	TANK 26	TANK 25	PROCESS	TYPE II	3	230	1
497	TANK 26	TANK 27	PROCESS	TYPE II	3	290	1
515	TANK 8	VALVE BOX	PROCESS	TYPE II	3	100	4
520	TANK 5	VALVE BOX	PROCESS	TYPE II	3	190	7
521	TANK 6	VALVE BOX	PROCESS	TYPE II	3	180	9
547	TANK 26	TANK 28	PROCESS	TYPE II	3	420	1
960	TANK 25	TANK 26	CTS	TYPE II	2	210	1
1012	TANK 26	242-16F EVAP SYS	PROCESS	TYPE II	1	120	
1013	TANK 26	TANK 27	CTS	TYPE II	2	180	0
1040	TANK 26	FDB6 [4]	PROCESS	TYPE II	3	570	
1054	TANK 27	TANK 28	CTS	TYPE II	2	180	1
1104	TANK 28	FDB5 [9]	CTS	TYPE II	2	350	2
1377	242-16F EVAP SYS	TANK 26	GDL	TYPE II	2	70	17
1378	242-16F EVAP SYS	TANK 25	GDL	TYPE II	2	170	18

TABLE 4–9

F–AREA HLW TANK FARM TRANSFER LINES

LINE NUMBER	LINE ORIGIN/DESTINATION		LINE SERVICE	LINE TYPE	TRANSFER LINE DIAMETER (INCHES)	APPROXIMATE LINE LENGTH (FEET)	APPROXIMATE ELEVATION CHANGE (FEET)
1379	242-16F EVAP SYS	TANK 27	GDL	TYPE II	2	60	17
1380	242-16F EVAP SYS	TANK 28	GDL	TYPE II	2	160	17
1383	242-16F EVAP SYS	TANK 44	GDL	TYPE II	2	180	17
1384	242-16F EVAP SYS	TANK 45	GDL	TYPE II	2	80	17
1385	242-16F EVAP SYS	TANK 46	GDL	TYPE II	2	80	17
1386	242-16F EVAP SYS	TANK 47	GDL	TYPE II	2	170	17
1408	CRC (TANK 27)	242-16F EVAP SYS	PROCESS	TYPE II	2	100	
1414	242-16F EVAP SYS	CRC (TANK 27)	PROCESS	TYPE II	2	100	
1461	TANK 44	FDB4 [20]	PROCESS	TYPE II	3	490	11
1462	TANK 45	FDB4 [19]	PROCESS	TYPE II	3	360	13
1467	TANK 46	FDB4 [18]	PROCESS	TYPE II	3	660	13
1468	FDB4 [17]	TANK 47	PROCESS	TYPE II	3	780	13
1472	FDB3 [10]	FDB4 [8]	PROCESS	TYPE II	3	170	0
1475	SEPERATIONS BLDG	FPP3 [1]	HHW INFLUENT	TYPE II	3	2250	11
1477	SEPARATIONS BLDG	FPP3 [2]	HHW INFLUENT	TYPE II	3	2250	11
1478	SEPERATIONS BLDG	FPP2 [1]	LLW INFLUENT	TYPE II	3	2250	11
1488	SEPERATIONS BLDG	FPP2 [2]	LLW INFLUENT	TYPE II	3	2250	11
3260	TANK 34	TANK 33	CTS	TYPE II	2	150	
3261	TANK 33	FDB5 [3]	CTS	TYPE II	2	380	
3265	F-CTS	FDB5 [1]	CTS	TYPE II	2	550	
3267	TANK 7	FDB6 [1]	PROCESS	TYPE II	3	210	
3273	FDB5 [10]	TANK 25	CTS	TYPE II	2	380	
3275	FDB5 [2]	F-CTS	CTS	TYPE II	2	560	
3276	FDB5 [4]	TANK 34	CTS	TYPE II	2	530	
3277	FDB6 [6]	242-F EVAP SYS	PROCESS	TYPE II	3	290	
4702	UNLOADING AREA	TANK 47	PROCESS	TYPE II	3	50	

LEGEND:

APP – Auxiliary Pump Pit
CRC – Cesium Removal Column
CTS – Concentrate Transfer System
FN – Floor Nozzle
[ ] – Identifies the Location of the Floor/Wall Nozzle (Diversion Box or Pump Pit) to Transfer Line Connection.

GDL – Gravity Drain Line
IAL – Interarea Transfer Line
LPPP – Low Point Pump Pit
WN – Wall Nozzle

TYPE I – Stainless steel in concrete trench
TYPE II – Stainless steel in carbon steel jacket
TYPE IIA – Carbon steel in carbon steel jacket
TYPE III – Stainless steel in cement–asbestos jacket
TYPE IIIA – Carbon steel in cement–asbestos jacket
TYPE IV – Stainless steel in stainless steel jacket

TABLE 4–10

H–AREA HLW TANK FARM TRANSFER LINES

LINE NUMBER	LINE ORIGIN/DESTINATION		LINE SERVICE	LINE TYPE	TRANSFER LINE DIAMETER (INCHES)	APPROXIMATE LINE LENGTH (FEET)	APPROXIMATE ELEVATION CHANGE (FEET)
1E	HDB1 [23]	TANK 12	PROCESS	TYPE I	3	220	1
2E	TANK 12	HDB1 [14]	PROCESS	TYPE I	3	220	1
3E	HDB1 [22]	HPP3 [2]	PROCESS	TYPE I	3	340	6
4E	HDB1 [21]	TANK 10	PROCESS	TYPE I	3	120	8
5E	HDB1 [26]	TANK 11	PROCESS	TYPE I	3	220	4
6E	HDB1 [13]	HPP3 [3]	PROCESS	TYPE I	3	200	6
8E	TANK 12	HDB2 [26]	PROCESS	TYPE IIA	3	80	2
9E	TANK 11	HDB2 [25]	PROCESS	TYPE IIA	3	140	2
20E	TANK 16	TANK 13	PROCESS	TYPE III	3	260	
21E	TANK 14	TANK 13	PROCESS	TYPE III	3	370	
33E	HDB1 [20]	TANK 9	PROCESS	TYPE I	3	120	1
37E	HDB1 [15]	HPP1 [3]	PROCESS	TYPE I	3	380	6
38E	HDB1 [16]	HPP4 [3]	PROCESS	TYPE I	3	330	6
39E	HDB1 [17]	TANK 11	PROCESS	TYPE I	3	230	4
40E	HDB1 [27]	HPP2 [2]	PROCESS	TYPE I	3	360	6
41E	HDB1 [19]	VALVE BOX	PROCESS	TYPE I	3	70	14
42E	TANK 9	HDB1 [11]	PROCESS	TYPE II	3	120	1
46E	HDB1 [24]	HPP1 [2]	PROCESS	TYPE I	3	370	6
47E	HDB1 [25]	HPP4 [2]	PROCESS	TYPE I	3	320	6
48E	TANK 10	HDB1 [12]	PROCESS	TYPE II	3	120	8
49E	HDB1 [18]	HPP2 [3]	PROCESS	TYPE I	3	360	6
RE1	TANK 32	EVAP 25H	PROCESS	FUTURE	FUTURE	FUTURE	FUTURE
RE2	EVAP 25H	TANK 35	GDL	FUTURE	FUTURE	FUTURE	FUTURE
RE3	EVAP 25H	TANK 37	GDL	FUTURE	FUTURE	FUTURE	FUTURE
RE4	EVAP 25H	TANK 29	GDL	FUTURE	FUTURE	FUTURE	FUTURE
RE5	EVAP 25H	TANK 30	GDL	FUTURE	FUTURE	FUTURE	FUTURE
RE6	EVAP 25H	TANK 31	GDL	FUTURE	FUTURE	FUTURE	FUTURE
101E	HDB5 [7]	TANK 23	PROCESS	TYPE II	3	280	2
102E	HDB5 [6]	TANK 21	PROCESS	TYPE II	3	90	2
103E	HDB5 [3]	TANK 22	PROCESS	TYPE II	3	200	2
104E	HDB5 [2]	HDB8 [17]	PROCESS	TYPE II	2	90	2
105E	HDB5 [1]	HDB8 [18]	PROCESS	TYPE II	2	90	2
201E	HPP7 [5]	HDB8[FN3]	PROCESS	TYPE II	3	50	3
202E	HPP7 [4]	HBD8 [FN16]	PROCESS	TYPE II	3	50	3
203E	HDB8[FN1]	HPP7 [3]	PROCESS	TYPE II	3	50	3
204E	HPP7 [2]	HDB8[FN15]	PROCESS	TYPE II	3	50	3
205E	HPP8 [5]	HDB8[FN14]	PROCESS	TYPE II	3	40	3

TABLE 4-10

H-AREA HLW TANK FARM TRANSFER LINES

LINE NUMBER	LINE ORIGIN/DESTINATION		LINE SERVICE	LINE TYPE	TRANSFER LINE DIAMETER (INCHES)	APPROXIMATE LINE LENGTH (FEET)	APPROXIMATE ELEVATION CHANGE (FEET)
206E	HDB8[FN11]	HPP8 [4]	PROCESS	TYPE II	3	40	3
207E	HDB8[WN2]	HPP8 [3]	PROCESS	TYPE II	3	40	8
208E	HPP8 [2]	HBD8 [FN6]	PROCESS	TYPE II	3	40	3
209E	HPP9 [5]	HDB8[FN13]	PROCESS	TYPE II	3	30	3
210E	HPP9 [4]	HDB8 [FN10]	PROCESS	TYPE II	3	30	3
211E	HDB8[FN4]	HPP9 [3]	PROCESS	TYPE II	3	30	3
212E	HPP9 [2]	HDB8 [FN7]	PROCESS	TYPE II	3	30	3
213E	HPP10 [5]	HDB8 [9]	PROCESS	TYPE II	3	20	3
214E	HPP10 [4]	HDB8[FN5]	PROCESS	TYPE II	3	20	3
215E	HDB8[FN8]	HPP10 [3]	PROCESS	TYPE II	3	20	3
216E	HDB8FN12]	HPP10 [2]	PROCESS	TYPE II	3	20	3
705A	ITP FILTER	TANK 48	ITP	TYPE II	6	70	5
P102	HDB6 [8]	TANK 35	PROCESS	TYPE II	3	70	1.5
P103	HDB6 [9]	TANK 36	PROCESS	TYPE II	3	460	3
P104	HDB6 [10]	TANK 37	PROCESS	TYPE II	3	500	3
P105	HDB6 [1]	HDB8 [20]	PROCESS	TYPE II	3	180	13
P106	HDB6 [13]	HDB8 [21]	PROCESS	TYPE II			
P151	TANK 35	HDB6 [5]	PROCESS	TYPE II	3	70	2
P201	TANK 36	HDB6 [6]	PROCESS	TYPE II	3	460	3
P251	TANK 37	HDB6 [7]	PROCESS	TYPE II	3	500	3
1105A	ITP FILTER	TANK 48	ITP	TYPE II	6	90	5
1151A	TANK 48	ITP FILTER	PROCESS	TYPE II	6	180	15
1152A	TANK 48	ITP FILTER	PROCESS	TYPE II	6	190	15
1552A	ITP HOLD TANKS	TANK 50	ITP	TYPE II	3	320	7
1555A	ITP HOLD TANKS	HDB7 [21]	PROCESS	TYPE II	3	380	8
9	HDB2 [6]	HPP3 [23]	PROCESS	TYPE I	3	70	4
10	HPP1 [5]	HDB2 [5]	PROCESS	TYPE I	3	60	3
11	HPP2 [4]	HDB2 [4]	PROCESS	TYPE I	3	50	1
12	HPP2 [5]	HDB2 [3]	PROCESS	TYPE I	3	50	3
13	HPP3 [4]	HDB2 [8]	PROCESS	TYPE I	3	60	3
14	HPP3 [5]	HDB2 [7]	PROCESS	TYPE I	3	40	3
15	HPP4 [4]	HDB2 [2]	PROCESS	TYPE I	3	30	3
17	TANK 15	TANK 13	PROCESS	TYPE IIA	3	80	0
18	HDB2 [16]	TANK 13	PROCESS	TYPE I	3	190	28
19	HDB2 [14]	TANK 15	PROCESS	TYPE I	3	330	28
20	HDB2 [13]	TANK 15	PROCESS	TYPE I	3	330	28
21	HDB2 [12]	TANK 16 VALVE BOX	PROCESS	TYPE I	3	340	28

TABLE 4–10

H–AREA HLW TANK FARM TRANSFER LINES

LINE NUMBER	LINE ORIGIN/DESTINATION		LINE SERVICE	LINE TYPE	TRANSFER LINE DIAMETER (INCHES)	APPROXIMATE LINE LENGTH (FEET)	APPROXIMATE ELEVATION CHANGE (FEET)
22	HDB2 [11]	TANK 16	PROCESS	TYPE I	3	340	28
23	HDB2 [10]	TANK 14	PROCESS	TYPE II	3	220	28
24	HDB2 [9]	TANK 14	PROCESS	TYPE II	3	220	28
27	HDB2 [22]	TANK 13	PROCESS	TYPE II	3	240	32
29	HDB2 [20]	HDB5 [11]	PROCESS	TYPE II	3	270	46
30	HDB5 [10]	HDB2 [19]	PROCESS	TYPE II	3	270	46
31	TANK 15	TANK 16 VALVE BOX	PROCESS	TYPE IIA	3		1
100	HDB3 [3]	TANK 23	PROCESS	TYPE III	3		
101	HDB3 [2]	TANK 21	PROCESS	TYPE III	3	50	5
102	TANK 29	HDB4 [9]	PROCESS	TYPE II	3	100	0
103	HDB4 [6]	TANK 31	PROCESS	TYPE II	3	190	0
104	HDB4 [4]	TANK 32	PROCESS	TYPE II	3	110	4
105	HDB4 [8]	TANK 30	PROCESS	TYPE II	3	80	2
108	HDB4 [12]	HDB5 [9]	PROCESS	TYPE II	3	460	4
109	HDB4 [10]	TANK 29	PROCESS	TYPE II	3	100	0
110	TANK 31	HDB4 [5]	PROCESS	TYPE II	3	190	0
111	TANK 32	HDB4 [3]	PROCESS	TYPE II	3	110	4
112	TANK 30	HDB4 [7]	PROCESS	TYPE II	3	80	2
140	RRF/RBOF	HDB3 [1]	PROCESS	TYPE III	3		
149	F/H ETF FORCE MAIN	HDB8 [6]	PROCESS	TYPE II		150	
150	F/H ETF	HDB8 [5]	PROCESS				
451	TANK 13	242–H EVAP SYS	PROCESS	TYPE II	3	420	6
501	242–H EVAP SYS	H–CTS [2]	CTS	TYPE II	2		1
504	H–CTS [27]	TANK 29	CTS	TYPE II	2	90	2
505	H–CTS [21]	TANK 32	CTS	TYPE II	2	90	2
506	TANK 32	TANK 31	CTS	TYPE II	2	260	2
507	TANK 31	TANK 30	CTS	TYPE II	2	150	1
508	TANK 30	TANK 29	CTS	TYPE II	2	30	1
509	TANK 29	H–CTS [24]	CTS	TYPE II	2	260	7
910	TANK 9	VALVE BOX	PROCESS	TYPE II	3	130	0
911	TANK 10	VALVE BOX	PROCESS	TYPE II	3	200	2
1051	HDB4 [2]	HDB6 [13]	PROCESS	TYPE II	3	500	5
1101	SEPARATIONS BLDG	HPP5 [2]	INFLUENT (LHW)	TYPE II	3	760	13
1102	SEPARATIONS BLDG	HPP5 [1]	INFLUENT (LHW)	TYPE II	3	760	13
1103	SEPARATIONS BLDG	HPP6 [1]	INFLUENT (HHW)	TYPE II	3	760	13
1104	SEPARATIONS BLDG	HPP6 [2]	INFLUENT (HHW)	TYPE II	3	760	13
1501	TANK 39	TANK 43	PROCESS	TYPE II	3	300	1

TABLE 4-10

H-AREA HLW TANK FARM TRANSFER LINES

LINE NUMBER	LINE ORIGIN/DESTINATION		LINE SERVICE	LINE TYPE	TRANSFER LINE DIAMETER (INCHES)	APPROXIMATE LINE LENGTH (FEET)	APPROXIMATE ELEVATION CHANGE (FEET)
1528	TANK 38	TANK 43	PROCESS	TYPE II	3	600	2
1576	TANK 41	TANK 43	PROCESS	TYPE II	3	310	1
1596	TANK 40 (VALVE BOX)	TANK 43	PROCESS	TYPE II	3	240	1
1626	TANK 43	HDB7 [10]	PROCESS	TYPE II	3	800	7
1628	TANK 43	242-16H EVAP SYS	PROCESS	TYPE II	1	40	20
1651	242-16H EVAP SYS	TANK 43	GDL	TYPE II	2	30	3
1653	242-16H EVAP SYS	TANK 41	GDL	TYPE II	2	130	3
1654	242-16H EVAP SYS	TANK 40	GDL	TYPE II	2	40	3
1661	TANK 48	TANK 49	PROCESS	TYPE II	3	340	1
1662	TANK 51 (VALVE BOX)	TANK 43	PROCESS	TYPE II	3	470	1
1663	TANK 50	TANK 43	PROCESS	TYPE II	3	620	1
1825	TANK 24	HDB5 [8]	PROCESS	TYPE II	3		2
2701	242-16H EVAP SYS	TANK 39	GDL	TYPE II	2	60	3
2702	242-16H EVAP SYS	TANK 38	GDL	TYPE II	2	170	3
2708	242-16H EVAP SYS	TANK 42	GDL	TYPE II	2	40	3
2722	TANK 42 (VALVE BOX)	TANK 43	PROCESS	TYPE II	3	350	1
3051	HDB7 [11]	TANK 43	PROCESS	TYPE II	3	800	7
3052	HDB7 [12]	TANK 41	PROCESS	TYPE II	3	440	1
3053	HDB7 [13]	TANK 40 (VALVE BOX)	PROCESS	TYPE II	3	350	1
3054	HDB7 [14]	TANK 39	PROCESS	TYPE II	3	200	1
3056	HDB7 [20]	TANK 49 (VALVE BOX)	PROCESS	TYPE II	3	750	1
3057	HDB7 [19]	TANK 48	PROCESS	TYPE II	3	500	1
3060	HDB7 [22]	TANK 51 (VALVE BOX)	PROCESS	TYPE II	3	980	1
3061	HDB7 [23]	HDB8 [3]	PROCESS	TYPE II	3		
3062	HDB7 [24]	HDB8 [2]	PROCESS	TYPE II	3		
3068	HDB2 [31]	HDB7 [5]	PROCESS	TYPE II	3		
3069	HDB7 [6]	HDB2 [30]	PROCESS	TYPE II	3		
3070	HDB7 [3]	HDB8 [1]	PROCESS	TYPE II	3		
3071	HDB8 [4]	HDB7 [4]	PROCESS	TYPE II	3		
3083	HDB7 [17]	TANK 38	PROCESS	TYPE II	3	60	1
3084	HDB7 [18]	TANK 42 (VALVE BOX)	PROCESS	TYPE II	3	270	7
3094	HPP6 [7]	HDB7 [1]	PROCESS	TYPE II	3	830	
3095	HPP6 [6]	HDB7 [2]	PROCESS	TYPE II	3	830	
3096	HDB7 [9]	HDB8 [15]	PROCESS	TYPE II	3		
3097	HPP5 [7]	HDB7 [7]	PROCESS	TYPE II	3	800	
3098	HPP5 [6]	HDB7 [8]	PROCESS	TYPE II	3	800	
3102	HDB7 [25]	HDB8 [16]	PROCESS	TYPE II	3		

TABLE 4-10

H-AREA HLW TANK FARM TRANSFER LINES

LINE NUMBER	LINE ORIGIN/DESTINATION		LINE SERVICE	LINE TYPE	TRANSFER LINE DIAMETER (INCHES)	APPROXIMATE LINE LENGTH (FEET)	APPROXIMATE ELEVATION CHANGE (FEET)
3958	242-16H EVAP SYS	CRC (TANK 42)	PROCESS	TYPE II	1.5		1
3964	CRC (TANK 42)	242-16H EVAP SYS	PROCESS	TYPE II	1.5		1

LEGEND:

APP - Auxiliary Pump Pit
CRC - Cesium Removal Column
CTS - Concentrate Transfer System
FN - Floor Nozzle
[ ] - Identifies the Location of the Floor/Wall Nozzle (Diversion Box or Pump Pit) to Transfer Line Connection.

GDL - Gravity Drain Line
IAL - Interarea Transfer Line
LPPP - Low Point Pump Pit
WN - Wall Nozzle

TYPE I - Stainless steel in concrete trench
TYPE II - Stainless steel in carbon steel jacket
TYPE IIA - Carbon steel in carbon steel jacket
TYPE III - Stainless steel in cement-asbestos jacket
TYPE IIIA - Carbon steel in cement-asbestos jacket
TYPE IV - Stainless steel in stainless steel jacket

TABLE 4-11

F/H AND H/S INTERAREA TRANSFER LINES

LINE NUMBER	LINE ORIGIN/DESTINATION		LINE SERVICE	LINE TYPE	TRANSFER LINE DIAMETER (INCHES)	APPROXIMATE LINE LENGTH (FEET)	APPROXIMATE ELEVATION CHANGE (FEET)
F/H INTERAREA TRANSFER LINE							
100	FDB2 [25]	F/H FLUSH PIT	PROCESS	TYPE II	3	4230	
100	H/F FLUSH PIT	HPP7 [19]	PROCESS	TYPE II	3	6330	
101	HPP7 [18]	F/H FLUSH PIT	PROCESS	TYPE II	3	6330	
101	H/F FLUSH PIT	FDB2 [26]	PROCESS	TYPE II	3	4230	
H/S INTERAREA TRANSFER LINE							
301E	DWPF VIT. FAC.	LPPP	SPARE	TYPE II	3	1270	
302E	LPPP	APP	SPARE	TYPE II	3	2280	2
303E	APP	HDB8 [WN7]	SPARE	TYPE II	3	2350	7
401E	LPPP	DWPF VIT. FAC.	WASHED SLUDGE	TYPE II	3	1270	
402E	APP	LPPP	WASHED SLUDGE	TYPE II	3	2280	2
403E	TANK 51	APP	WASHED SLUDGE	TYPE II	3	1900	48
404E	TANK 40	APP	WASHED SLUDGE	TYPE II	3	2200	54
501E	LPPP	DWPF VIT. FAC.	WASHED PPT	TYPE II	3	1270	
502E	APP	LPPP	WASHED PPT	TYPE II	3	2280	2
503E	TANK 49	APP	WASHED PPT	TYPE II	3	1700	51
601E	LPPP	DWPF VIT. FAC.	RECYCLE	TYPE II	3	1270	
602E	LPPP	APP	RECYCLE	TYPE II	3	2280	2
603E	APP	HDB8 [WN8]	RECYCLE	TYPE II	3	2350	7

LEGEND:

APP – Auxiliary Pump Pit
CRC – Cesium Removal Column
CTS – Concentrate Transfer System
FN – Floor Nozzle
[ ] – Identifies the Location of the Floor/Wall Nozzle (Diversion Box or Pump Pit) to Transfer Line Connection.

GDL – Gravity Drain Line
IAL – Interarea Transfer Line
LPPP – Low Point Pump Pit
WN – Wall Nozzle

TYPE I – Stainless steel in concrete trench
TYPE II – Stainless steel in carbon steel jacket
TYPE IIA – Carbon steel in carbon steel jacket
TYPE III – Stainless steel in cement – asbestos jacket
TYPE IIIA – Carbon steel in cement – asbestos jacket
TYPE IV – Stainless steel in stainless steel jacket

The containment pipe usually drains to a sump. Ground water is not known to infiltrate into the containment pipe. Approximately 75% of the transfer lines are of this type.

Type IIA - Carbon Steel Transfer Pipe in a Carbon Steel Jacket. This configuration is the same as that for Type II except that the internal transfer line is also made of carbon steel. This configuration is recognized as a Type II variant for reference purposes. Only a few lines are of this construction.

Type III - Stainless Steel Transfer Line in a Cement-Asbestos Jacket. Cement-asbestos pipe is manufactured from asbestos, silica, and cement. It is factory tested at 3.5 times its working pressure and is also given a flexure test. The containment pipe is "pressure pipe" rated for 100 psig service. It is furnished in 13-foot lengths which are joined by couplings that are closed by means of two rubber ring seals. The rubber seals tend to degrade in radiation fields; however, this type of configuration (shown in Figure 4-28) is used intermittently to transfer waste.

This design is not currently used for new facilities. None of the waste transfer lines of this type have leaked, but some nonradioactive ground water has infiltrated into the jacket at the line between Building 244-H (RBOF) and HDB3.

Type IV - Stainless Steel Transfer Line in a Stainless Steel Jacket. Only two stainless steel waste transfer lines have a stainless steel jacket. These transfer lines run between FDB2 and Tank 7. This design allows the annulus between the waste transfer line and the containment jacket to be pressurized with steam to heat the transfer line.

Type V - Stainless Steel Transfer Line within a Containment Structure. These transfer lines are used within the processing units (i.e., evaporators and ITP) to connect the various pieces of process equipment. These lines are also used to complete connections between wall and floor nozzles within individual diversion boxes and/or pump pit structures. The containment features of these structures are described in further detail in Appendix C.

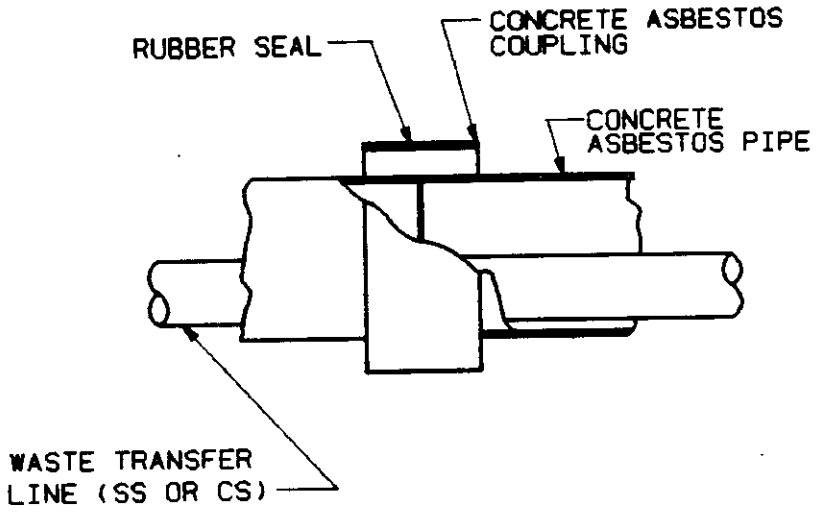

TYPICAL JOINT

CAD NO.	FIGURE 4-28 TYPE III AND III-A LINE ENCASEMENT (SS OR CS PIPE IN CEMENT-ASBESTOS JACKET)	NO SCALE
W2020335		6000-44-3190W

The waste transfer system handles several different types of waste including fluids, slurries and concentrated salt solutions. Each waste stream has different physical characteristics which affect transfer operations. As a result, some transfer lines are dedicated to a particular service while others can have multiple uses. The type of transfer line is considered prior to initiating a transfer which has not been performed previously.

An example of a dedicated process is the waste concentrate transfer system previously described in Section 4.4.2. This system is used to transport the waste concentrate (evaporator bottoms) from the evaporators to the waste concentrate receipt tanks. Although other wastes may be transferred through the waste concentrate transfer system, the converse is not true, that is, the waste concentrate cannot be transferred in a transfer system which is not designed to handle the waste concentrate. These dedicated waste concentrate transfer lines are identified on Tables 4-9 and 4-10.

The waste transfer lines can be cleaned with flush water which is provided at many of the diversion boxes and pump pits. The flow of flush water into each of the transfer lines is regulated by a series of valves. The flush water and accumulated residue are discharged into the adjoining waste tank or pump tank.

4.8.2 Diversion Boxes

Diversion boxes are junction chambers used to interconnect waste transfer lines. Most transfer lines are routed to and terminate at a diversion box. The transfer lines can be connected to each other in any combination by installing "jumpers" to complete the desired transfer path.

Jumpers are specially fabricated pipe segments with gasketed connections designed to be tightened remotely by an impact wrench suspended from a crane. The pipe segments are normally constructed from stainless steel. The gasketed connections consist of a clamp and a seal. The clamp portion is tightened down with an impact wrench causing the jaws of the clamp to close securely onto the nozzle. The seal prevents the loss of any material during transfer. Jumpers are individually fabricated to connect the desired nozzles. Jumpers are not permanent fixtures and can be removed from the pump pit or diversion box. A typical jumper connection is shown as Figure 4-29.

In addition to rigid jumper connections, there are also flex jumpers which are occasionally used for short term or rare waste transfers. Flex jumpers are 2 inch diameter hoses that are surrounded by rubber and are manually installed.

The use of valves is minimized to avoid potential leaks. Valves are used in diversion boxes only in instances that would otherwise require frequent jumper changes which could subject employees to potential radiation exposure. To guard against potential radiation exposure resulting

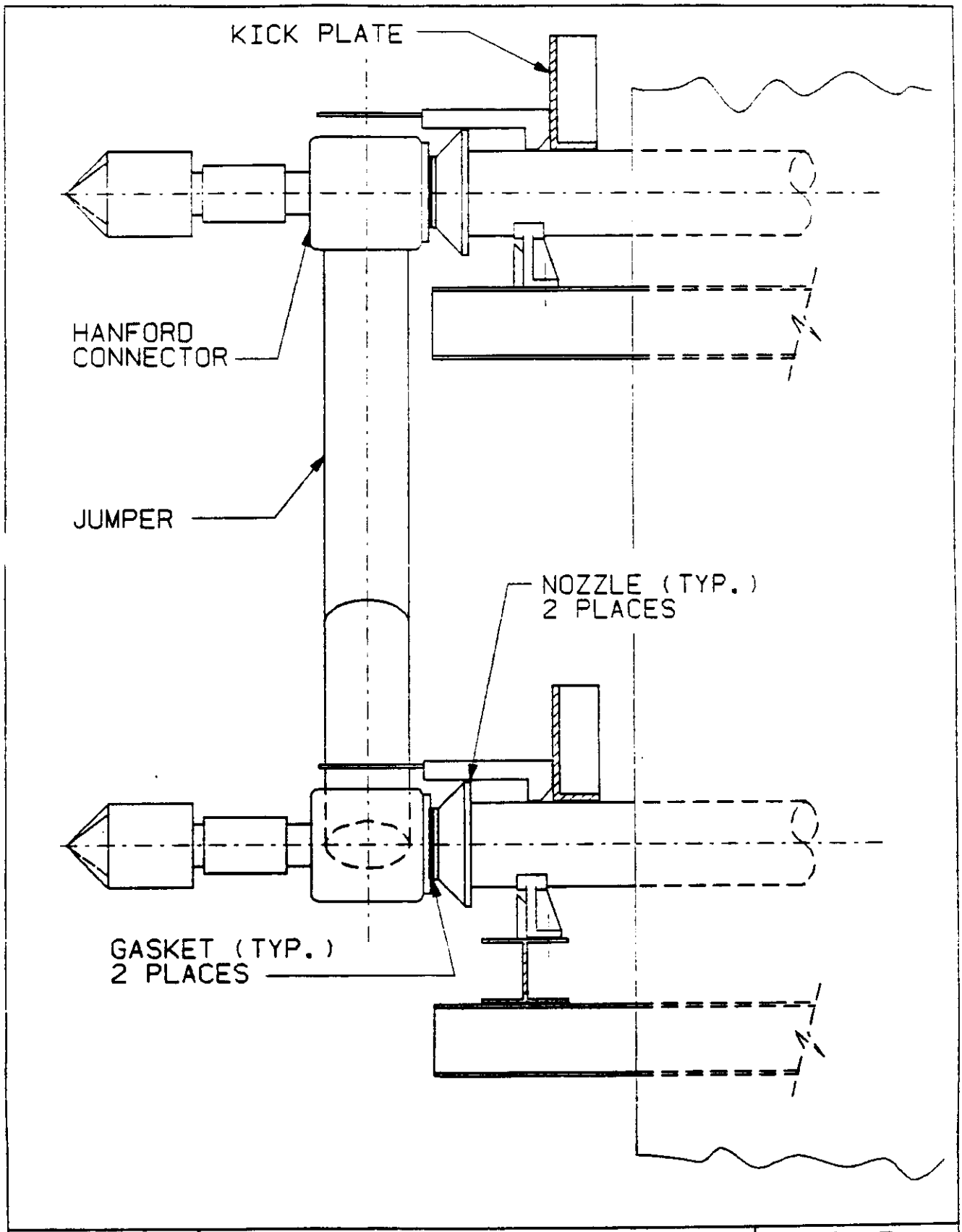

CAD NO.	FIGURE 4-29	NO SCALE
W2020533	TYPICAL JUMPER CONNECTION	6000-44-3190W

from gasket leakage, diversion boxes are usually underground, constructed from reinforced concrete, and either sealed with water proofing compounds (FDB1, HDB1, and HDB3) or have stainless steel liners. Should a gasket or valve leak or fail, any leakage would be contained within the containment structure for the diversion box or pump pit. The leakage is collected in a sump and is transferred to a waste tank. The containment sump is also equipped with instrumentation to notify operators that a leak has occurred. The leak is then located and repaired. Additional details for the secondary containment structures and leak detection system are contained in Appendix C.

A total of 14 diversion boxes have been constructed, 6 in F Area and 8 in H Area. The location of these diversion boxes are shown on Figures 2-6 (F Area) and 2-7 (H Area). These diversion boxes are identified as FDB1 to FDB6 for the F-Area HLW Tank Farm and HDB1 to HDB8 for the H-Area HLW Tank Farm. Each diversion box varies in size and complexity according to their function. The year of construction and general purpose for each diversion box is summarized in Table 4-12. The potential transfer routes for each diversion box are shown on Figures 4-30 to 4-43.

4.8.3 Valve Boxes

Valve boxes are similar to diversion boxes in that they allow simplification of waste transfer routing. Unlike diversion boxes, valve boxes are normally installed to serve specific transfers which are conducted on a frequent basis. These valve boxes eliminate the need to install additional waste transfer lines or to change jumpers on

TABLE 4-12

DIVERSION BOX SUMMARY

Diversion Box Number	Year Constructed	General Purpose
F-Area HLW Tank Farm		
FDB1	1952	Inactive.
FDB2	1969	To transfer wastes between the F-Area and H-Area HLW Tank Farms. This diversion box includes a pump pit (FPP1) to transfer wastes.
FDB3	1973	To serve Tanks 33 and 34.
FDB4	1978	To direct high level radioactive waste from the F-Area Separations Facility to the appropriate waste tank. This diversion box includes two pump pits (FPP2 and FPP3) to transfer wastes.
FDB5	1978	To connect the waste concentrate transfer system for the 242-F evaporator system to Tanks 25-28 and Tanks 33-34.
FDB6	1980	To allow the contents of Tank 26 to be fed to Evaporator 242-F.
H-Area HLW Tank Farm		
HDB1	1953	Inactive.
HDB2	1956	To serve Tanks 9-16. This diversion box has four pump pits (HPP1, HPP2, HPP3, and HPP4) to transfer wastes. Currently, HPP1 does not contain a pump tank.
HDB3	1962	To direct radioactive waste from the RBOF building (244-H) and RRF building (245-H) to the appropriate waste tank (Tank 21 or 23).
HDB4	1970	To serve Tanks 29-32.
HDB5	1969	To serve Tanks 21-24.
HDB6	1977	To serve Tanks 35-37.
HDB7	1980	To permit transfer of wastes to/from HDB2, HPP5, and HPP6 to/from Tanks 38-43 and Tanks 48-51.
HDB8	1990	To transfer wastes between the H-Area HLW Tank Farm and the DWPF Vitrification Facility and to accept wastewater which is too radioactive for the F/H ETF to treat, and to accept ETF waste concentrate which is too radioactive for treatment in the Z-Area SMDF. The HDB8 is also the new control center for a majority of the intertank transfers in the H-Area HLW Tank Farm and the F/H Interarea Transfer Line. HDB8 is equipped with four pump pits (HPP7, HPP8, HPP9, and HPP10) to transfer wastes. Spare stubs are also provided for future expansion.

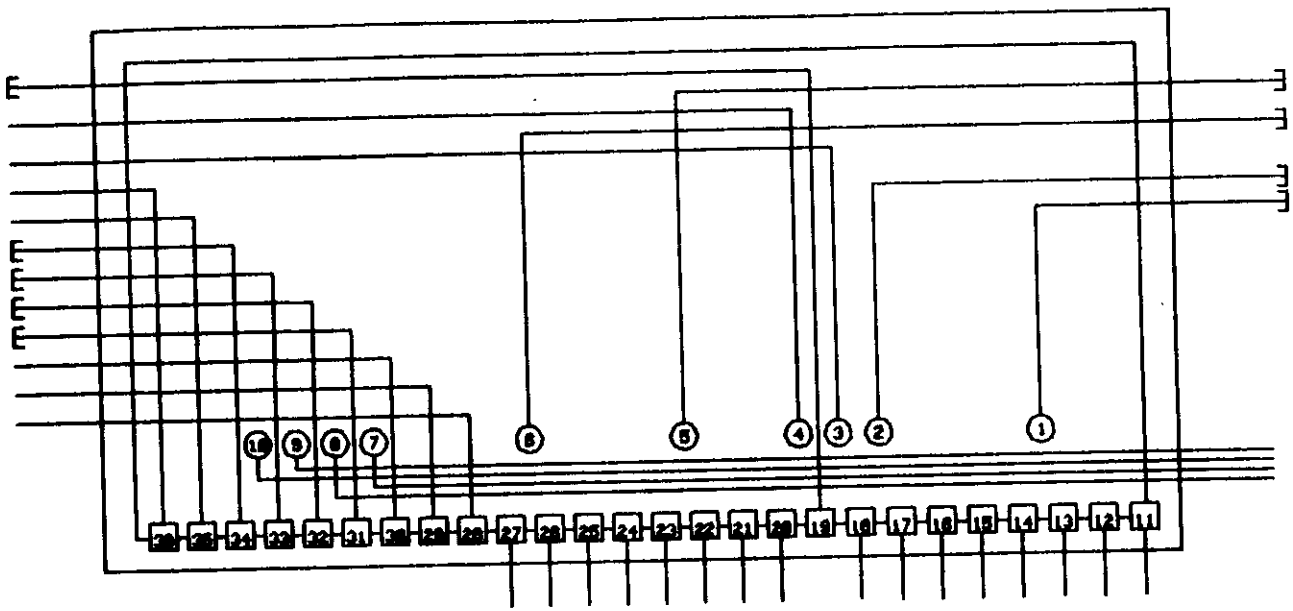

LEGEND

- □ HORIZONTAL NOZZLE
- ○ VERTICAL NOZZLE
- ⊥ ABANDONED OR CAPPED

NOZZLE NUMBER	CURRENT USE
1.	ABANDONED
2.	ABANDONED
3.	TO CATCH TANK
4.	SUMP(TO CATCH TANK)
5.	ABANDONED
6.	ABANDONED
7.	FROM TANK 18
8.	FROM FDB-2
9.	SPARE
10.	SPARE
11.	TO/FR TANK 1
12.	TO/FR TANK 2
13.	TO/FR TANK 3
14.	TO/FR TANK 4
15.	TO/FR TANK 5
16.	TO/FR TANK 6
17.	TO/FR TANK 7
18.	TO/FR TANK 8
19.	ABANDONED
20.	TO/FR TANK 1

NOZZLE NUMBER	CURRENT USE
21.	TO/FR TANK 2
22.	TO/FR TANK 3
23.	TO/FR TANK 4
24.	TO/FR TANK 5
25.	TO/FR TANK 6
26.	TO/FR TANK 7
27.	TO/FR TANK 8
28.	TO/FR TANK 18
29.	TO/FR TANK 17
30.	TO FPP1

NOZZLE NUMBER	CURRENT USE
31.	ABANDONED
32.	ABANDONED
33.	ABANDONED
34.	ABANDONED
35.	SPARE
36.	SPARE

CAD NO.	TITLE:	NO SCALE
SE5-2-2006189	FIGURE 4-30 DIVERSION BOX FDB1 LAYOUT	6000-44-3190W

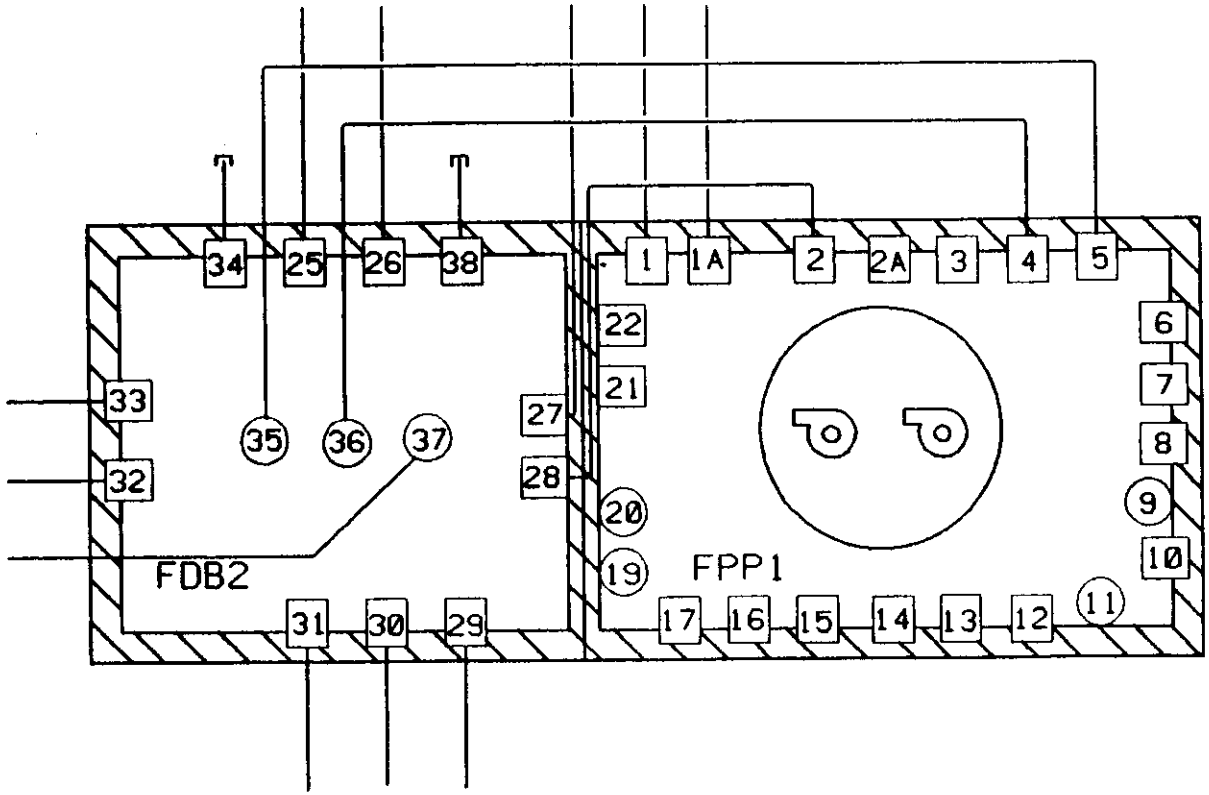

LEGEND

□ HORIZONTAL NOZZLE

○ VERTICAL NOZZLE

NOZZLE NUMBER		CURRENT USE
FDB2	25.	TO HDB-2
	26.	FROM HDB-2
	27.	TO/FROM FDB1
	28.	TO FPP1
	29.	FROM FDB3
	30.	TO/FROM FDB3
	31.	FROM TANK 7
	32.	TO FDB3
	33.	TO TK18(ABANDONED)
	34.	SPARE
	35.	FROM FPP1
	36.	FROM FPP1
	37.	TO TK7 OR FROM TKS 4, 5, 6, AND 8
	38.	SPARE
FPP1	1.	FROM FDB4
	1A.	FROM FDB1
	2.	FROM FDB2
	4.	TO FDB2
	5.	TO FDB2

CAD NO.	TITLE:	NO SCALE
SE5-2-2017712	FIGURE 4-31 DIVERSION BOX FDB2 LAYOUT	6000-44-3190W

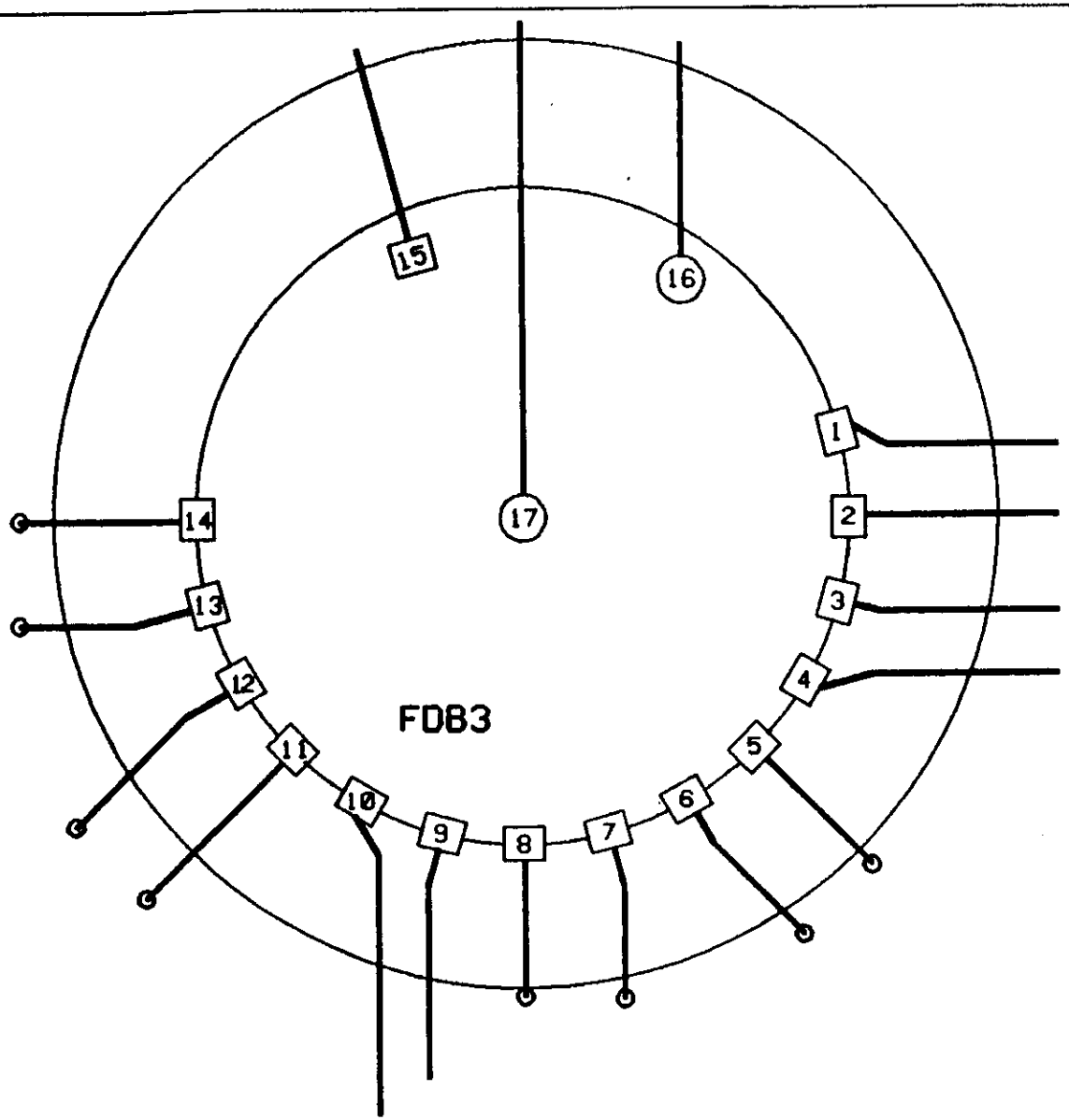

LEGEND

□ HORIZONTAL NOZZLE

○ VERTICAL NOZZLE

NOZZLE NUMBER	CURRENT USE
1.	TO TANK 34
2.	FROM TANK 34
3.	TO TANK 33
4.	FROM TANK 33
5.	SPARE
6.	SPARE
7.	SPARE
8.	SPARE
9.	FROM FDB4
10.	TO/FROM FDB4
11.	SPARE
12.	SPARE
13.	SPARE
14.	SPARE
15.	FROM FDB2
16.	TO/FROM FDB2
17.	TO FDB2

CAD NO.	TITLE:	NO SCALE
SE5-2-2006188	FIGURE 4-32 DIVERSION BOX FDB3 LAYOUT	6000-44-3190W

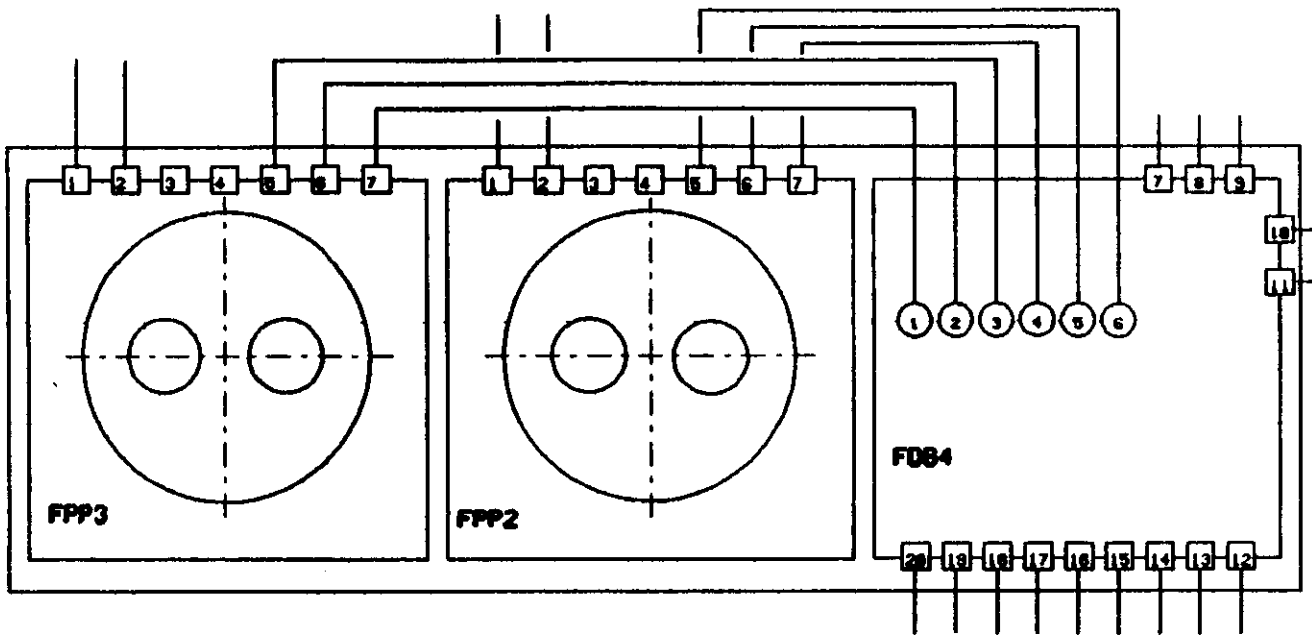

LEGEND

□ HORIZONTAL NOZZLE

○ VERTICAL NOZZLE

	NOZZLE NUMBER	CURRENT USE
FPP3	1.	HHW FROM SEP. CAN.
	2.	HHW FROM SEP. CAN.
	5.	TO FDB4
	6.	FROM FDB4
	7.	TO FDB4
FPP2	1.	LHW FROM SEP. CAN.
	2.	LHW FROM SEP. CAN.
	5.	TO FDB4
	6.	FROM FDB4
	7.	TO FDB4
FDB4	1.	FROM FPP3
	2.	TO FPP3
	3.	FROM FPP3
	4.	FROM FPP2
	5.	TO FPP2
	6.	FROM FPP2
	7.	TO FPP1
	8.	FROM FDB3
	9.	TO FDB3
	10.	TO TANK 28

NOZZLE NUMBER	CURRENT USE
18.	FROM TANK 46
19.	FROM TANK 45
20.	FROM TANK 44

NOZZLE NUMBER	CURRENT USE
11.	TO TANK 27
12.	TO TANK 26
13.	FROM TANK 26
14.	SPARE
15.	TO FDB7(FUTURE)
16.	TO TANK 25
17.	TO TANK 47

CAD NO.	TITLE:	NO SCALE
SE5-2-2006185	FIGURE 4-33 DIVERSION BOX FDB4 & PUMP PITS FPP2 & FPP3 LAYOUT	6000-44-3190W

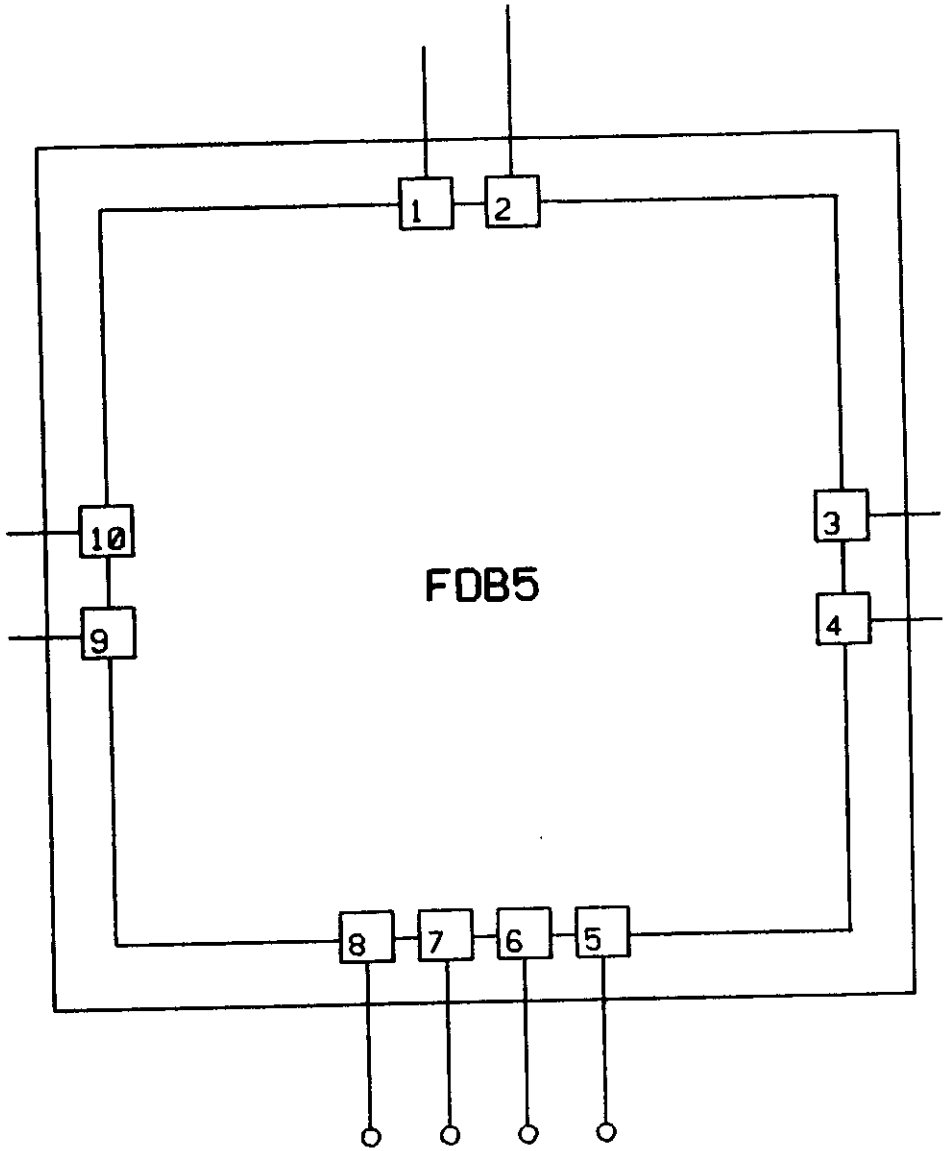

LEGEND

□ HORIZONTAL NOZZLE

○ VERTICAL NOZZLE

NOZZLE NUMBER	CURRENT USE
1.	FROM CTS TANK (242-3F)
2.	TO CTS TANK (242-3F)
3.	FROM TANK 33
4.	TO TANK 33/34
5.	SPARE
6.	SPARE
7.	SPARE
8.	SPARE
9.	FROM TANK 28
10.	TO TANK 25

CAD NO.	TITLE:	NO SCALE
SE5-2-2006188	FIGURE 4-34 DIVERSION BOX FDB5 LAYOUT	6000-44-3190W

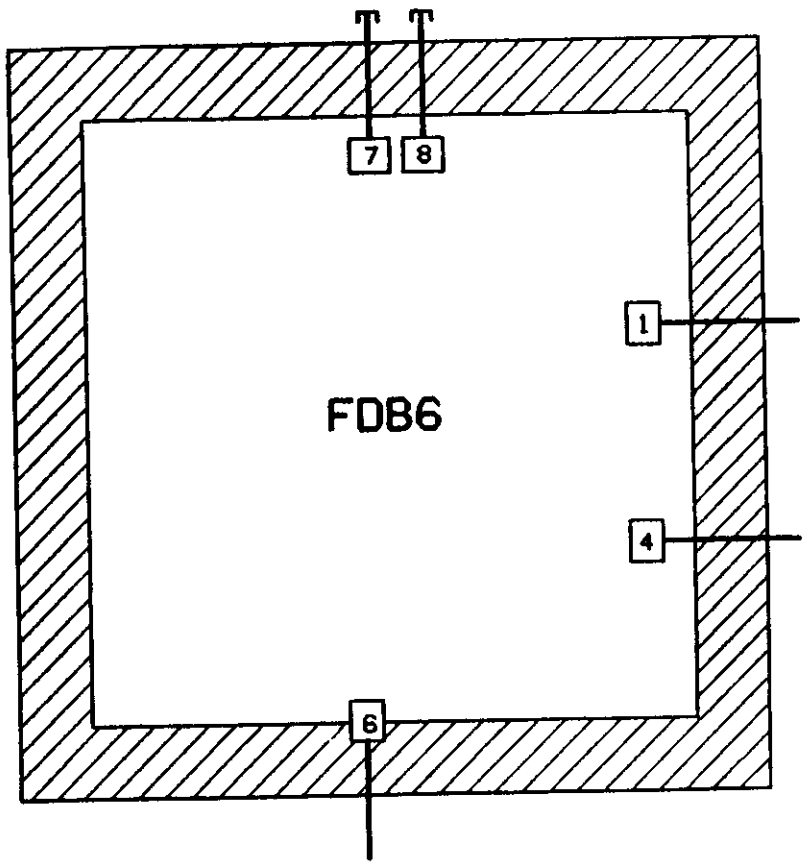

LEGEND

□ HORIZONTAL NOZZLE

○ VERTICAL NOZZLE

NOZZLE NUMBER	CURRENT USE
1.	FROM TANK 7
4.	FROM TANK 26
6.	TO EVAPORATOR 242-F
7.	SPARE
8.	SPARE

CAD NO.	TITLE:	NO SCALE
SE5-2-2006185	FIGURE 4-35 DIVERSION BOX FDB6 LAYOUT	6000-44-3190W

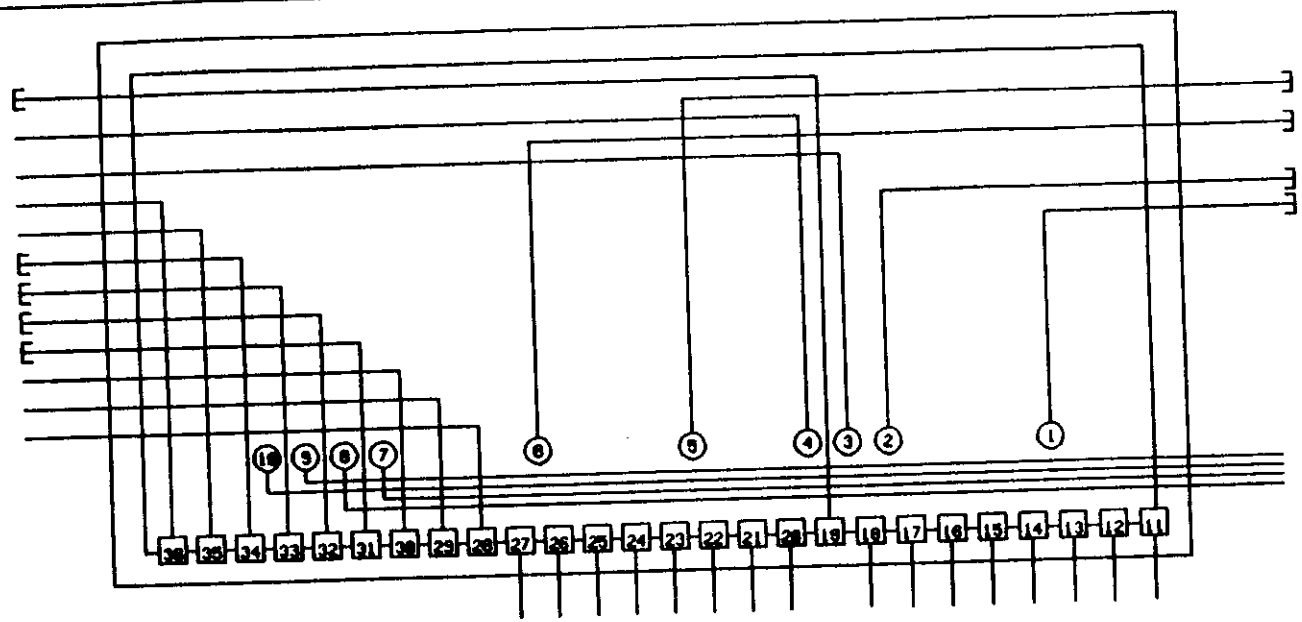

LEGEND

- □ HORIZONTAL NOZZLE
- ○ VERTICAL NOZZLE
- ⊥ ABANDONED OR CAPPED

NOZZLE NUMBER	CURRENT USE
1.	ABANDONED
2.	ABANDONED
3.	SPARE
4.	SPARE
5.	ABANDONED
6.	ABANDONED
7.	SPARE
8.	SPARE
9.	SPARE
10.	SPARE
11.	TO/FROM TANK 9
12.	TO/FROM TANK 10
13.	TO/FROM HPP3
14.	TO/FROM TANK 12
15.	TO/FROM HPP1
16.	TO/FROM HPP4
17.	TO/FROM TANK 11
18.	TO/FROM HPP2
19.	FROM VALVE BOX
20.	TO/FROM TANK 9

NOZZLE NUMBER	CURRENT USE
21.	TO/FROM TANK 10
22.	TO/FROM HPP3
23.	TO/FROM TANK 12
24.	TO/FROM HPP1
25.	TO/FROM HPP4
26.	TO/FROM TANK 11
27.	TO/FROM HPP2
28.	SPARE
29.	SPARE
30.	SPARE

NOZZLE NUMBER	CURRENT USE
31.	SPARE
32.	SPARE
33.	SPARE
34.	SPARE
35.	SPARE
36.	SPARE

CAD NO.	TITLE:	NO SCALE
SE5-2-2006190	FIGURE 4-36 DIVERSION BOX HDB1 LAYOUT	6000-44-3190W

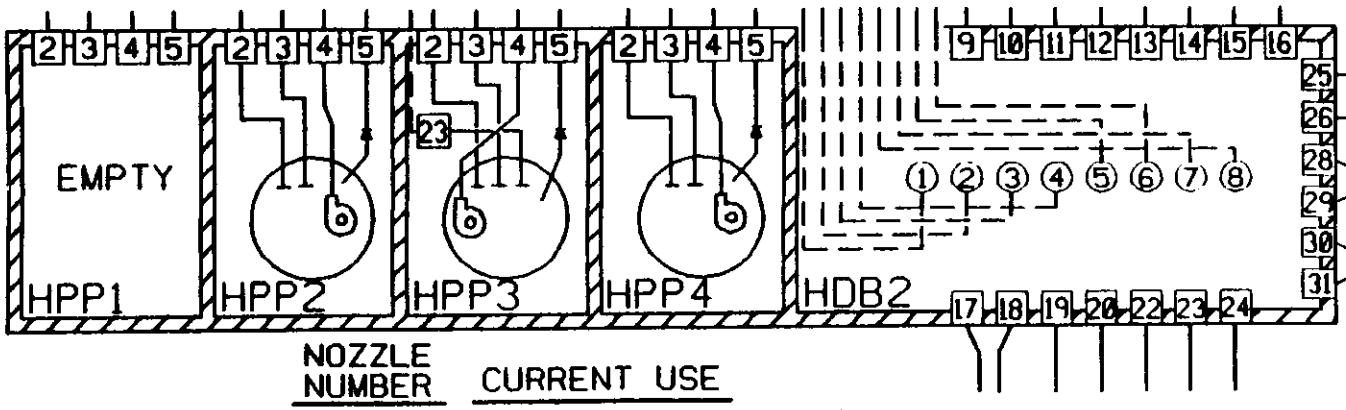

LEGEND

- □ HORIZONTAL NOZZLE
- ○ VERTICAL NOZZLE

	NOZZLE NUMBER	CURRENT USE
HDB2	1.	FROM HPP 4 (ABDN)
	2.	FROM HPP 4
	3.	FROM HPP 2
	4.	FROM HPP 2
	5.	FROM HPP 1
	6.	FROM HPP 3
	7.	FROM HPP 3
	8.	FROM HPP 3
	9.	TO TK.14
	10.	TO TK.14
	11.	TO TK.16
	12.	TO TK.16
	13.	TO TK.15
	14.	TO TK.15
	15.	TO/FROM HDB6 (ABDN)
	16.	TO TK.13
	17.	TO HDB4 (ABDN)
	18.	TO HDB4 (ABDN)
	19.	TO HDB5
	20.	TO HDB5
	22.	FROM TK. 13
	23.	FROM FDB2 (F/H IAL)
	24.	TO FDB2 (F/H IAL)

	NOZZLE NUMBER	CURRENT USE
HPP2	2.	TO HDB1
	3.	TO HDB1
	4.	TO HDB2
	5.	TO HDB2
HPP3	2.	TO HDB1
	3.	TO HDB1
	4.	TO HDB2
	5.	FROM HDB2
HPP4	2.	TO HDB1
	3.	TO HDB1
	4.	TO HDB2
	5.	TO HDB2

	NOZZLE NUMBER	CURRENT USE
HDB2	25.	FROM TK. 11
	26.	FROM TK. 12
	28.	TO HDB7 (ABDN)
	29.	FROM HDB7 (ABDN)
	30.	TO HDB7
	31.	TO HDB7
HPP1	2.	TO HDB1
	3.	TO HDB1
	4.	SPARE
	5.	TO HDB2

CAD NO.	TITLE:	NO SCALE
SE5-2-2017711	FIGURE 4-37 DIVERSION BOX HDB2 LAYOUT	6000-44-3190W

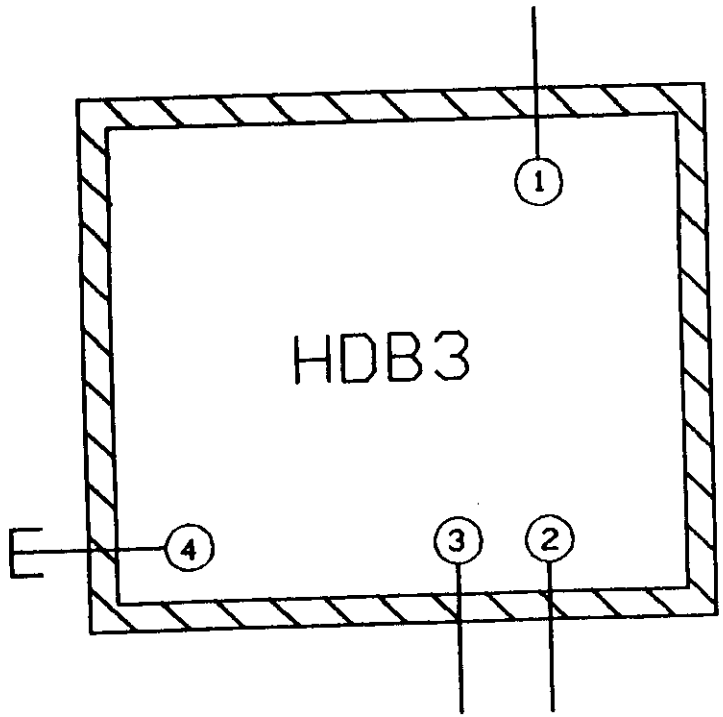

LEGEND

□ HORIZONTAL NOZZLE

○ VERTICAL NOZZLE

NOZZLE NUMBER	CURRENT USE
1.	FROM BLDG. 244,245-H (RBOF)
2.	TO TANK 21
3.	TO TANK 23
4.	SPARE

CAD NO.	TITLE:	NO SCALE
SE5-2-2017712	FIGURE 4-38 DIVERSION BOX HDB3 LAYOUT	6000-44-3190W

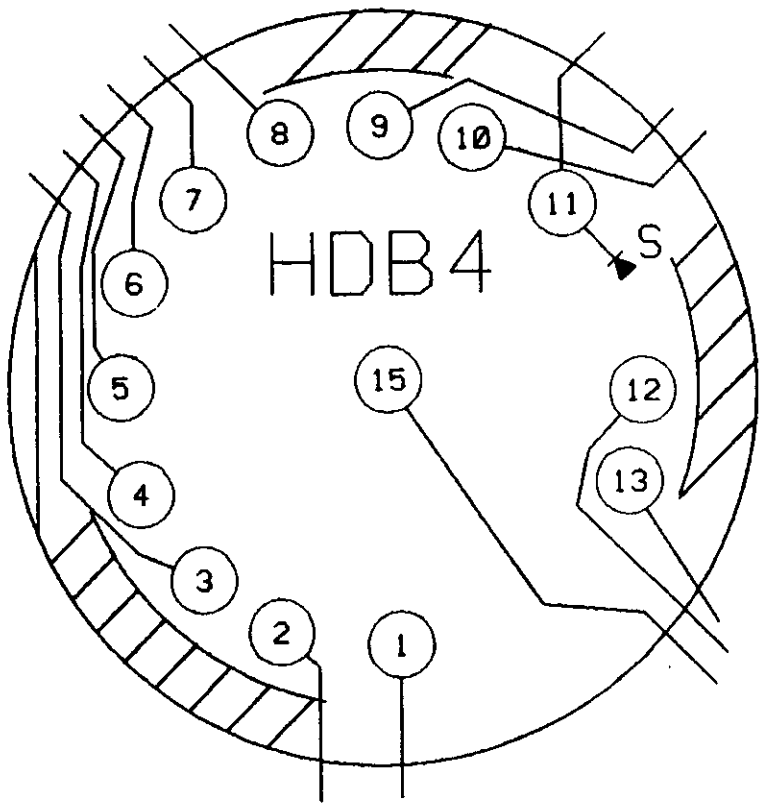

LEGEND

□ HORIZONTAL NOZZLE

○ VERTICAL NOZZLE

NOZZLE NUMBER	CURRENT USE
1.	SPARE
2.	TO HDB6
3.	FROM TK.32
4.	TO TK.32
5.	FROM TK.31
6.	TO TK.31
7.	FROM TK.30
8.	TO TK.30
9.	FROM TK.29
10.	TO TK.29
11.	SUMP TO TK.29
12.	TO/FROM HDB5
13.	TO/FROM HDB2 (ABDN)
15.	TO/FROM HDB2 (ABDN)

CAD NO.	TITLE:	NO SCALE
SE5-2-2017711	FIGURE 4-39 DIVERSION BOX HDB4 LAYOUT	6000-44-3190W

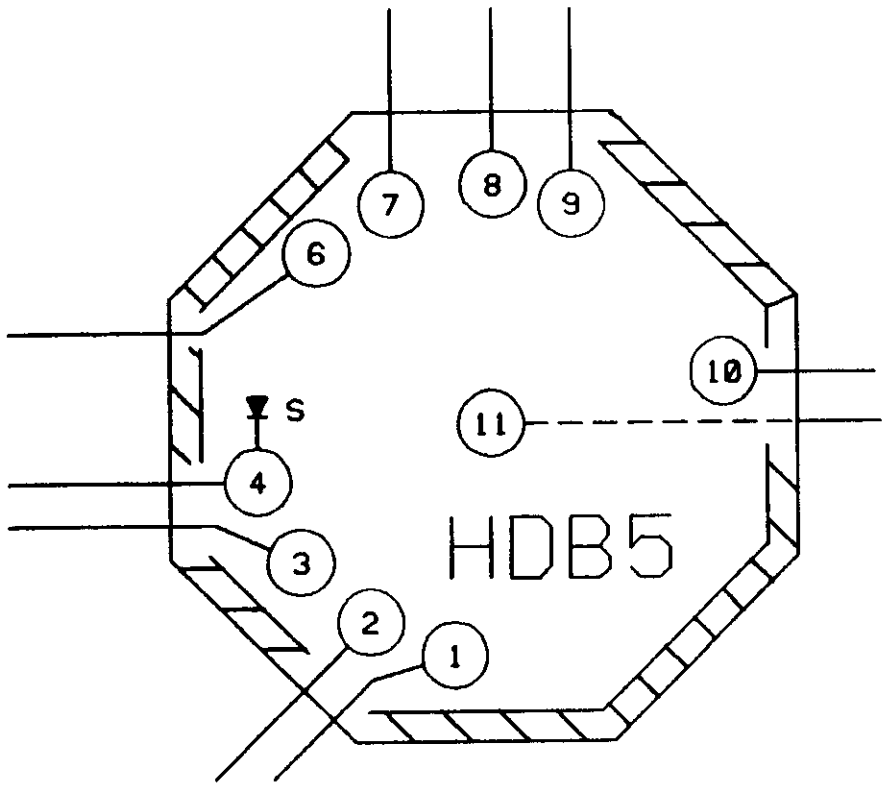

LEGEND

□ HORIZONTAL NOZZLE

○ VERTICAL NOZZLE

NOZZLE NUMBER	CURRENT USE
1.	TO HDB8
2.	TO HDB8
3.	TO TK.22
4.	SUMP TO TK.21
6.	TO TK.21
7.	TO TK.23
8.	TO TK.24
9.	TO/FROM HDB4
10.	TO/FROM HDB2
11.	TO/FROM HDB2

CAD NO.	TITLE:	NO SCALE
SE5-2-2017711	FIGURE 4-40 DIVERSION BOX HDB5 LAYOUT	6000-44-3190W

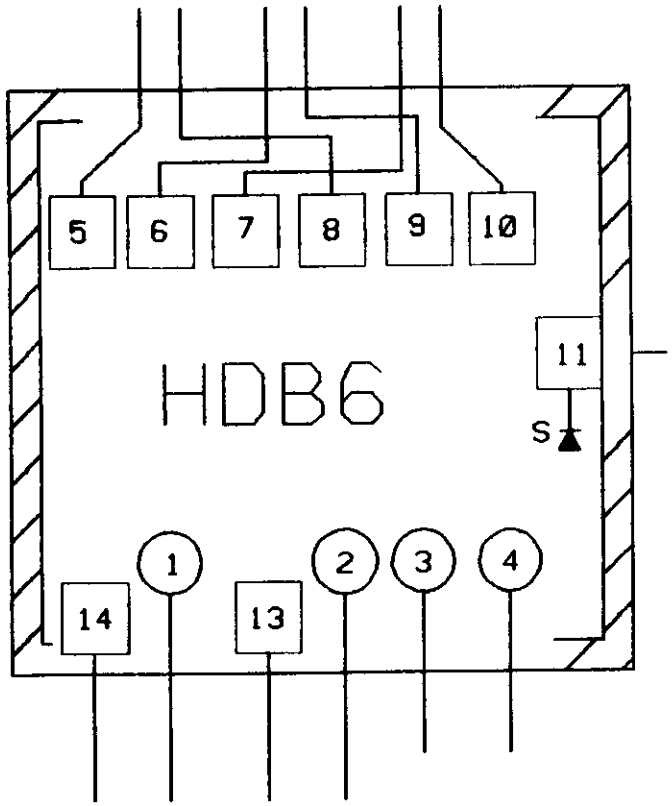

LEGEND

□ HORIZONTAL NOZZLE

○ VERTICAL NOZZLE

NOZZLE NUMBER	CURRENT USE
1.	FROM HDB8
2.	TO HDB8
3.	SPARE
4.	SPARE
5.	FROM TK.35
6.	FROM TK.36
7.	FROM TK.37
8.	TO TK.35
9.	TO TK.36
10.	FR.TK.37
11.	SUMP TO TK.35
13.	TO HDB4
14.	SPARE

CAD NO.	TITLE:	NO SCALE
SE5-2-2017711	FIGURE 4-41 DIVERSION BOX HDB6 LAYOUT	6000-44-3190W

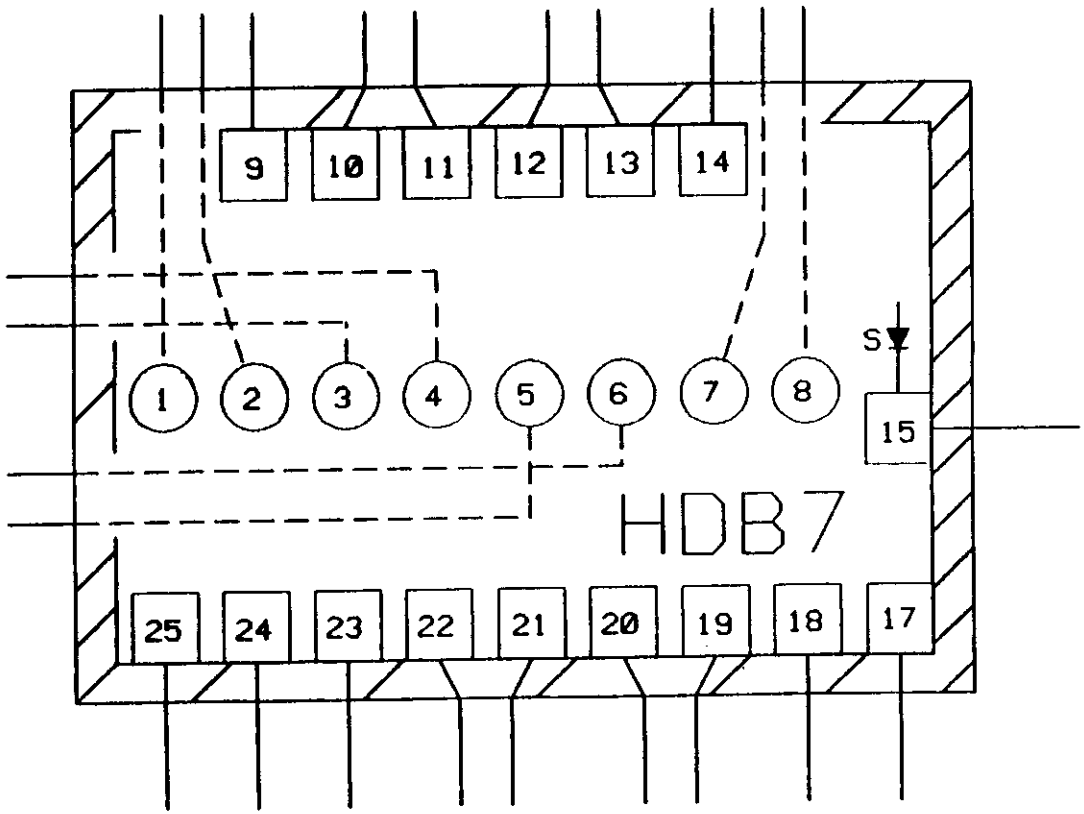

LEGEND

□ HORIZONTAL NOZZLE

○ VERTICAL NOZZLE

	NOZZLE NUMBER	CURRENT USE
HDB7	1.	FROM HPP6
	2.	FROM HPP6
	3.	TO HDB2
	4.	FROM HDB2
	5.	FROM HDB2
	6.	TO HDB2
	7.	FROM HPP5
	8.	FROM HPP5
	9.	TO/FROM HDB8
	10.	FROM TK.43
	11.	TO TK.43
	12.	TO TK.41
	13.	TO TK.40 VALVE BOX
	14.	TO TK.39
	15.	SUMP TO TK.38
	17.	TO TK.38
	18.	TO/FROM TK.42 VALVE BOX
	19.	TO TK.48
	20.	TO/FROM TK.49 VALVE BOX
	21.	FROM ITP FILTER BLDG.
	22.	TO TK.51 VALVE BOX
	23.	TO/FROM HDB8
	24.	TO/FROM HDB8
	25.	TO/FROM HDB8

CAD NO.	TITLE:	NO SCALE
SE5-2-2017711	FIGURE 4-42 DIVERSION BOX HDB7 LAYOUT	6000-44-3190W

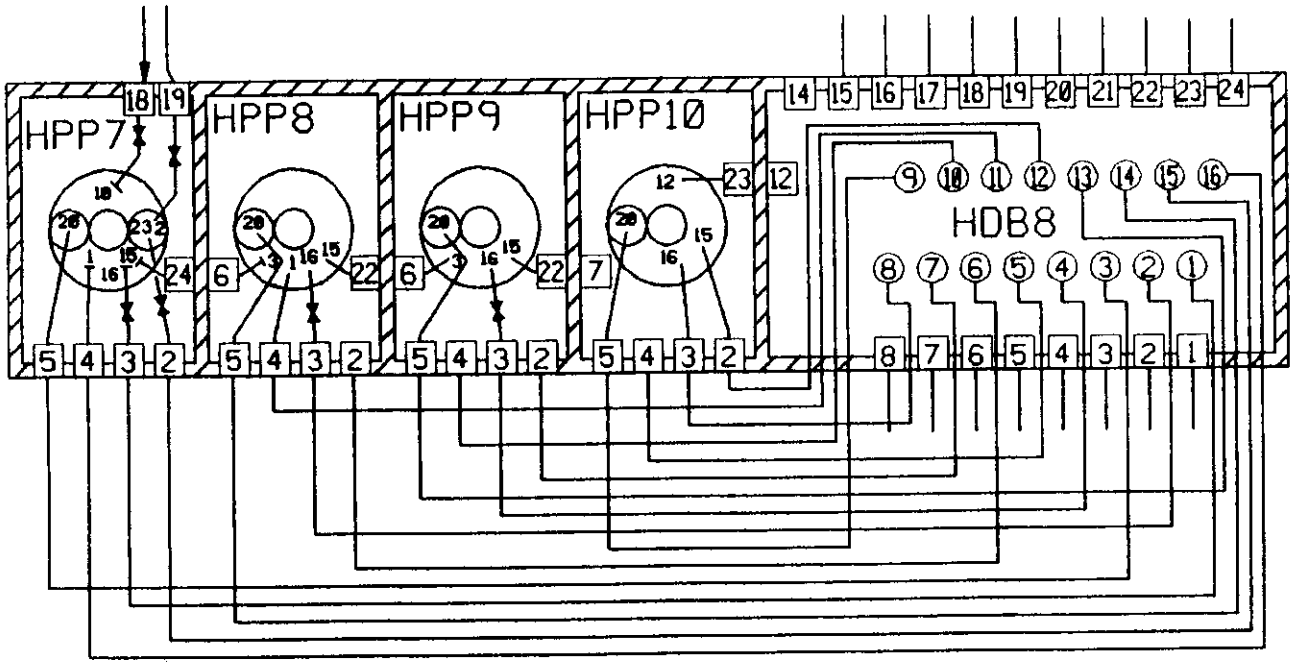

LEGEND

□ HORIZONTAL NOZZLE

○ VERTICAL NOZZLE

NOTE: SEE HDB8-SH. 2

CAD NO.	TITLE:	NO SCALE
SE5-2-2017711	FIGURE 4-43 DIVERSION BOX HDB8 LAYOUT	6000-44-3190W

VERTICAL NOZZLES

	NOZZLE NUMBER	CURRENT USE
HDB8	1.	TO HPP7
	2.	TO/FROM HPP8
	3.	FROM HPP7
	4.	TO/FROM HPP9
	5.	TO/FROM HPP10
	6.	TO/FROM HPP8
	7.	TO/FROM HPP9
	8.	TO/FROM HPP10
	9.	TO/FROM HPP10
	10.	TO/FROM HPP9
	11.	TO/FROM HPP8
	12.	TO/FROM HPP10
	13.	TO/FROM HPP9
	14.	TO/FROM HPP8
	15.	FROM HPP7
	16.	TO HPP7

HORIZONTAL NOZZLES

	NOZZLE NUMBER	CURRENT USE
HDB8	1.	FROM HDB7
	2.	FROM HDB7
	3.	FROM HDB7
	4.	FROM HDB7
	5.	FROM ETF
	6.	FROM ETF FORCE MAIN VALVE PIT
	7.	H/S IAL. SPARE
	8.	FROM AUX.PUMP PIT
	14.	SUMP LEVEL
	15.	TO HDB7
	16.	FROM HDB7
	17.	TO/FR.HDB5 (NOZZLE 1)
	18.	SPARE [TO/FR.HDB5] (NOZZLE)
	19.	SPARE
	20.	TO HDB6
	21.	TO HDB6
	22.	SPARE
	23.	SPARE
	24.	SPARE

	NOZZLE NUMBER	CURRENT USE
HPP7	2	TO HDB8
	3	FROM HDB8
	4	FROM HDB8
	5	TO HDB8
	18	FUTURE F/H IAL
	19	FUTURE F/H IAL
HPP8	2	TO/FROM HDB8
	3	TO/FROM HDB8
	4	TO/FROM HDB8
	5	TO/FROM HDB8
HPP9	2	TO/FROM HDB8
	3	TO/FROM HDB8
	4	TO/FROM HDB8
	5	TO/FROM HDB8
HPP10	2	TO/FROM HDB8
	3	TO/FROM HDB8
	4	TO/FROM HDB8
	5	TO/FROM HDB8

CAD NO.	TITLE:	NO SCALE
SE5-2-2017711	HDB8-SHT. 2	6000-44-3190W

a frequent basis. The locations of the currently installed valve boxes are identified on Figures 4-24 and 4-25 (contained in pocket sleeves). Additional valve boxes will be installed in the future to provide new or simplified transfer route for removal of waste from the waste tanks. A typical valve box arrangement is shown in Figure 4-44.

The majority of the existing and planned valve boxes are associated with a single waste tank. These valve boxes are installed to allow:

- Waste to be transferred to one of several different locations using a common transfer or jet pump contained within the waste tank, or
- Waste tank filling and emptying operations to be performed with one transfer line by providing a by-pass for the tank transfer or jet pump.

Both of the above functions are illustrated on Figure 4-44. Tanks 22, 28, 40, 42, 47, 49 and 51 have a valve box which provide one or both of the above listed purposes. The valve boxes for Tanks 22 and 49 were installed to support the ITP operations. Valve boxes for Tanks 40, 42, and 51 were installed to support the sludge processing operations. These valve boxes reduce the number of dedicated transfer pumps and transfer lines which are required to support these operations. Specific valves are opened or closed in response to the desired facility that waste is being transferred to.

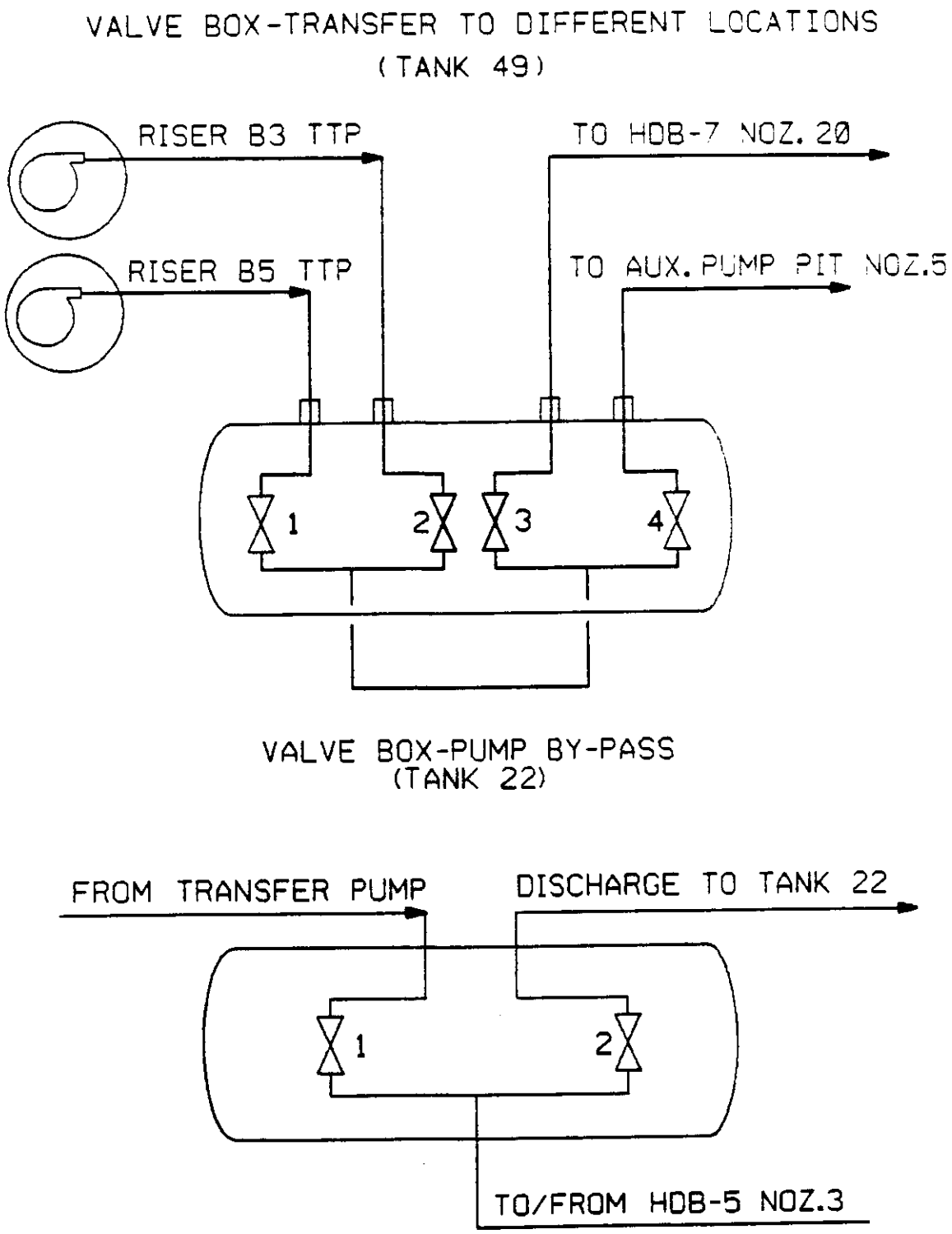

CAD NO.	FIGURE 4-44	NO SCALE
W2020533	VALVE BOX ARRANGEMENT	6000-44-3190W

Valve boxes are also used to connect two or more transfer lines to a common header line. These valve boxes eliminate the need to install multiple transfer lines from different waste tanks to the same end point. Two such valve box systems currently exist. The one in the F-Area HLW Tank Farm (adjacent to Tank 7) connects Tanks 4, 5, 6 and 8 to a common header which terminates at FDB2. The other valve box is located in the H-Area HLW Tank Farm (adjacent to Tank 9) and connects Tanks 9 and 10 to HDB1 through a common header. Specific valves are opened or closed within the valve box to provide the desired transfer route.

One other valve box is located on the transfer line between Tanks 18 and 20. This serves to isolate waste tank common ventilation system during waste removal operations (see Section 7.4.4).

4.8.4 Transfer Pumps

Mechanical pumps and jet pumps are used to transfer wastes. These pumps are located within the evaporator systems, the ITP Filtration Building, the pump pits, and the waste tanks. Each transfer pump is either dedicated to a particular service or may be used to transfer a variety of waste to various locations. For the purpose of

this permit application, the pump locations are designated as either a dedicated or general service pump. The dedicated service pumps are associated with the process operations (i.e., evaporator systems and ITP process operations). General service pumps are associated with pump pits and waste tanks.

The dedicated service pumps include the CRC pumps and the hold tank transfer pumps for the evaporator systems, and the stripper column pumps and filtrate hold tank transfer pumps for the ITP process. These pumps are located within the respective evaporator and ITP containment structures. These pumps are used to transfer wastes between process equipment which is part of a process flow train. In general, two identical pumps are provided in parallel to provide backup in the event of primary pump failure. The specifications for these pumps are described in Section 7.6.1. As described in Section 4.2, the replacement of these pumps is considered part of normal operations. The replacement pumps will be equivalent to the minimum specified requirements for the particular pump location. A description of the containment structures for the evaporators and ITP Building is provided in Appendix C.

General service pumps include waste tank transfer and feed pumps, and pump pit pumps. These pumps are used to transfer waste between waste tanks, to feed process systems, and to conduct interarea transfers. As previously stated, these transfer pumps may be moved and/or new ones added to accommodate waste process operations (i.e., salt cake and sludge removal). The current locations for some of these transfer pumps are identified on Figures 4-24 and 4-25. The general function for each type of general service transfer pump location is described below. The specifications for each general service transfer pump location is provided in Section 7.6.2.

Waste Tanks - Each waste tank has risers for installing transfer pumps to remove wastes from the tank. These pumps are either used as feed pumps for specific process operations or as general transfer pumps. Not all tanks currently have a pump installed within them. The current waste tank pump locations are shown on Figures 4-24 and 4-25. As stated in Section 4.2, existing or new transfer pumps will be installed within waste tanks as part of normal operations to accommodate waste removal.

Pump Pits - Pump pits are intermediate pump stations in the F and H-Area HLW Tank Farm waste transfer system. Pump pits contain a pump tank and hydraulic pumps and/or jet pumps. Pump pits are located at the low point of a transfer line. A total of 21 pump pits have been constructed; 4 in F Area, 11 in H Area, and 6 for the H/S IAL. The locations of the pump pits are shown on Figures 2-6, 2-7, and 2-2, respectively. Many of the pump pits are associated with diversion boxes. This relationship is shown in figures 4-30 through 4-43. The layout of pump pit HPP5 and HPP6 is shown on Figure 4-45. A layout of

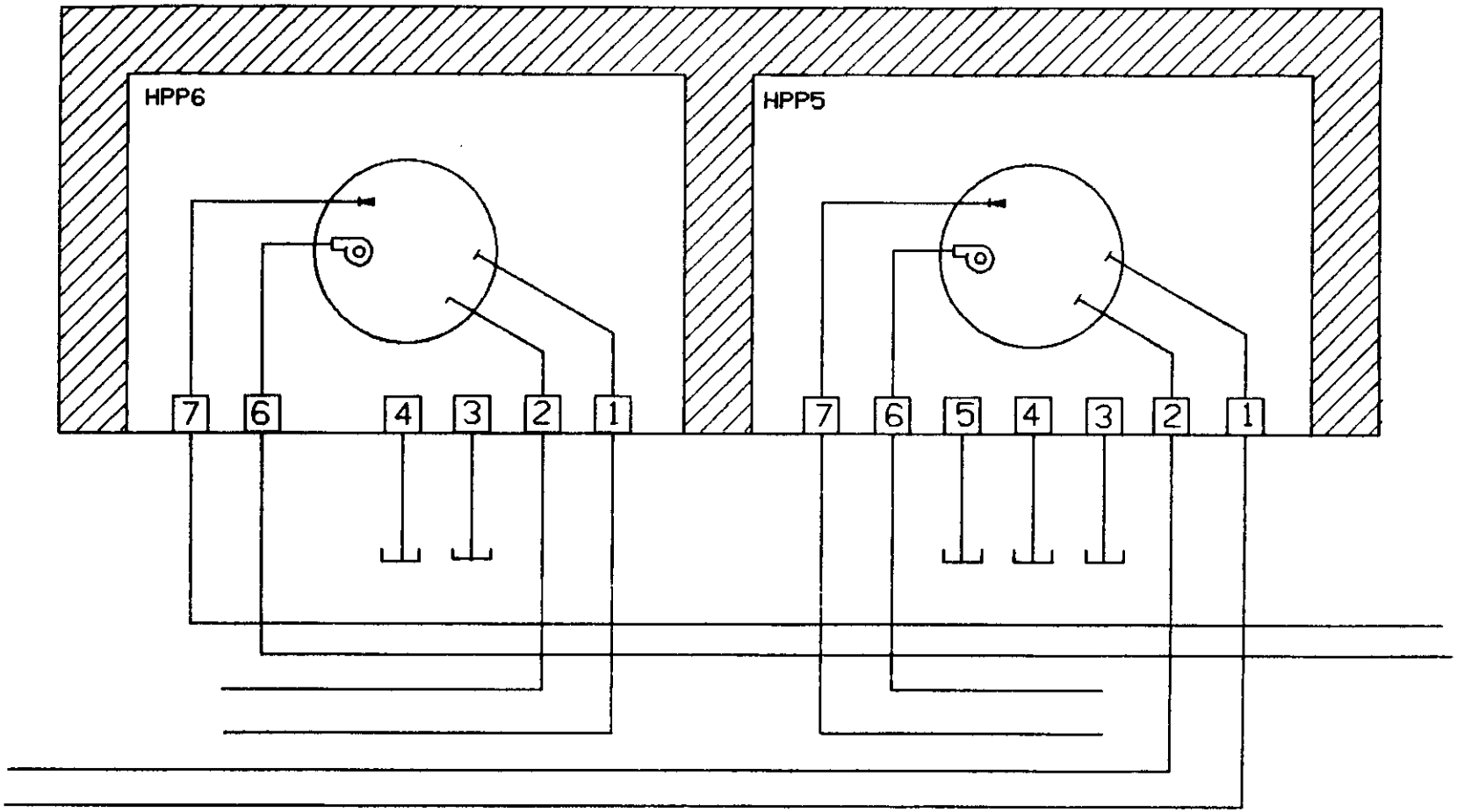

HPP6 NØZZLE NUMBER	CURRENT USE
1*	FROM SEPARATIONS CANYONS (HHW)
2*	FROM SEPARATIONS CANYONS (HHW)
3	FUTURE USE
4	FUTURE USE
6	TO HDB7
7	TO HDB7

HPP5 NØZZLE NUMBER	CURRENT USE
1*	FROM SEPARATIONS CANYONS & 299-H (LHW)
2*	FROM SEPARATIONS CANYONS & 299-H (LHW)
3	FUTURE USE
4	FUTURE USE
5	FUTURE USE
6	TO HDB7
7	TO HDB7

NOTE

* ONE IN USE, ONE SPARE

CAD NO.	FIGURE 4-45	NO SCALE
W2020548	PUMP PIT HPP5 AND HPP6 LAYOUT	6000-44-3190W

the Low Point Pump Pit (LPPP) and the Auxiliary Pump Pit (APP) on the H to S-Area interarea transfer line is shown on Figure 4-46.

Each pump tank normally has two means for being emptied. If one transfer device fails, the other can be used to empty the pump tank to minimize radiation exposure prior to repairs. The pump instruments and controls are set to maintain sufficient freeboard in the pump tank to allow waste from the transfer line to drain back into the pump tank in the event of a power/pump failure or emergency shutdown. A cross section of a typical pump pit is shown as Figure 4-47. A typical cross section is shown because all the pump pits are very similar.

The year of construction, pump tank capacity, type of transfer pump, and primary use for each pump pit are listed in Table 4-13. Of the pump pits listed in Table 4-13, the F-CTS and H-CTS pump pits are solely dedicated for the transfer of waste concentrate from the evaporator systems (i.e., 242-F and 242-H). The function of the F-CTS and H-CTS was previously described in Section 4-4.

4.8.5 F/H Interarea Transfer Line

The F and H-Area HLW Tank Farms are approximately two miles apart and are interconnected by the F/H Interarea Transfer Line (IAL) to allow wastes to be transferred between the two Tank Farms. The F/H IAL consists of a pair of 3-inch diameter stainless steel pipelines and a high point valve box. A schematic diagram for the future arrangement of the F/H IAL is shown on Figure 4-48. The detailed alignment for the F/H IAL is provided on Figures 2-3, 2-4, and 2-5 (contained in pocket sleeves). The waste transferred includes:

- LHW between F and H Areas to accommodate generation of wastes from the Separations Facilities, and availability of the LHW evaporator systems in each area,
- HHW supernate from F Area to the HHW evaporator system (242-H) for evaporation,

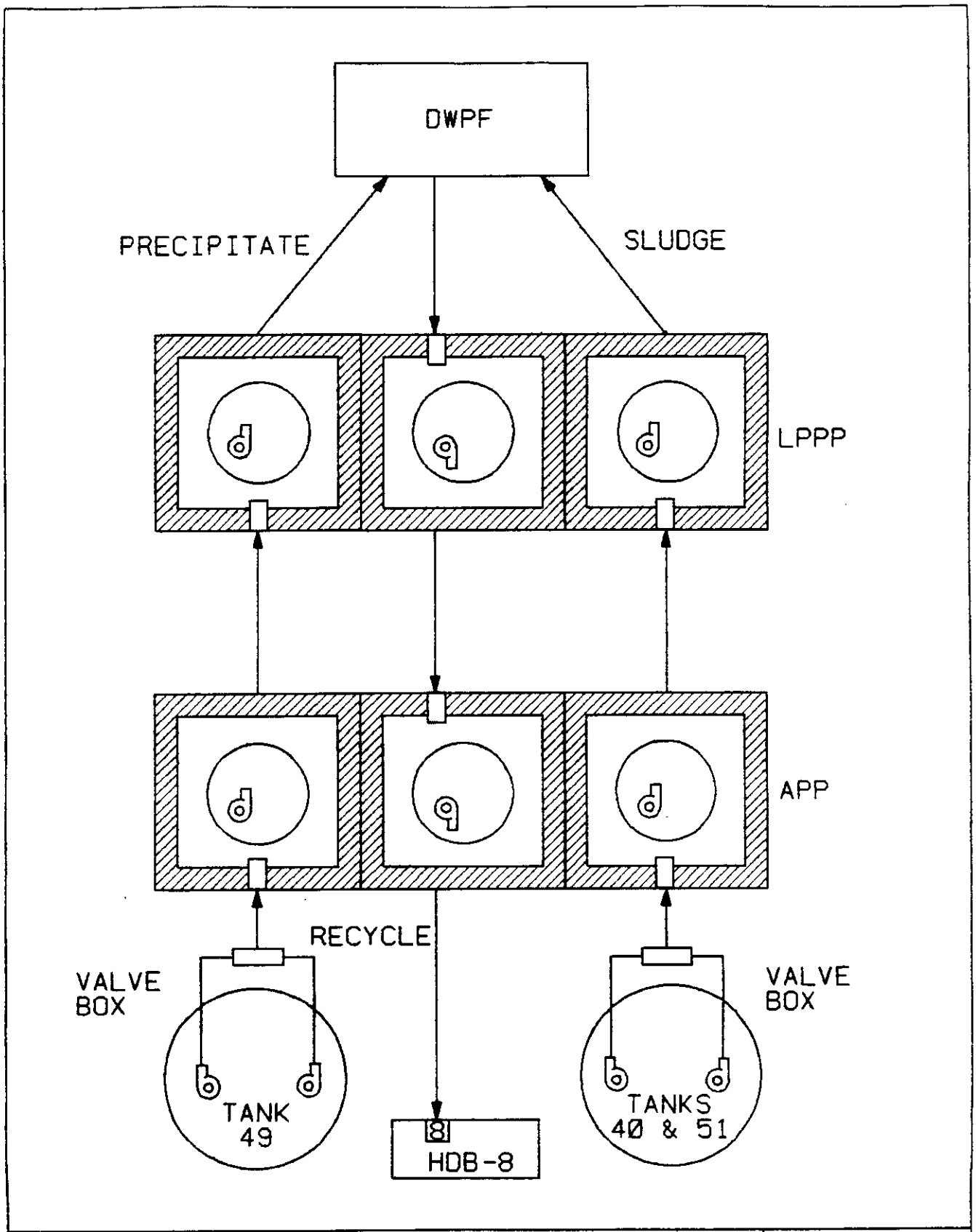

CAD NO.	FIGURE 4-46	NO SCALE
W2020548	LPPP AND APP LAYOUT	6000-44-3190W

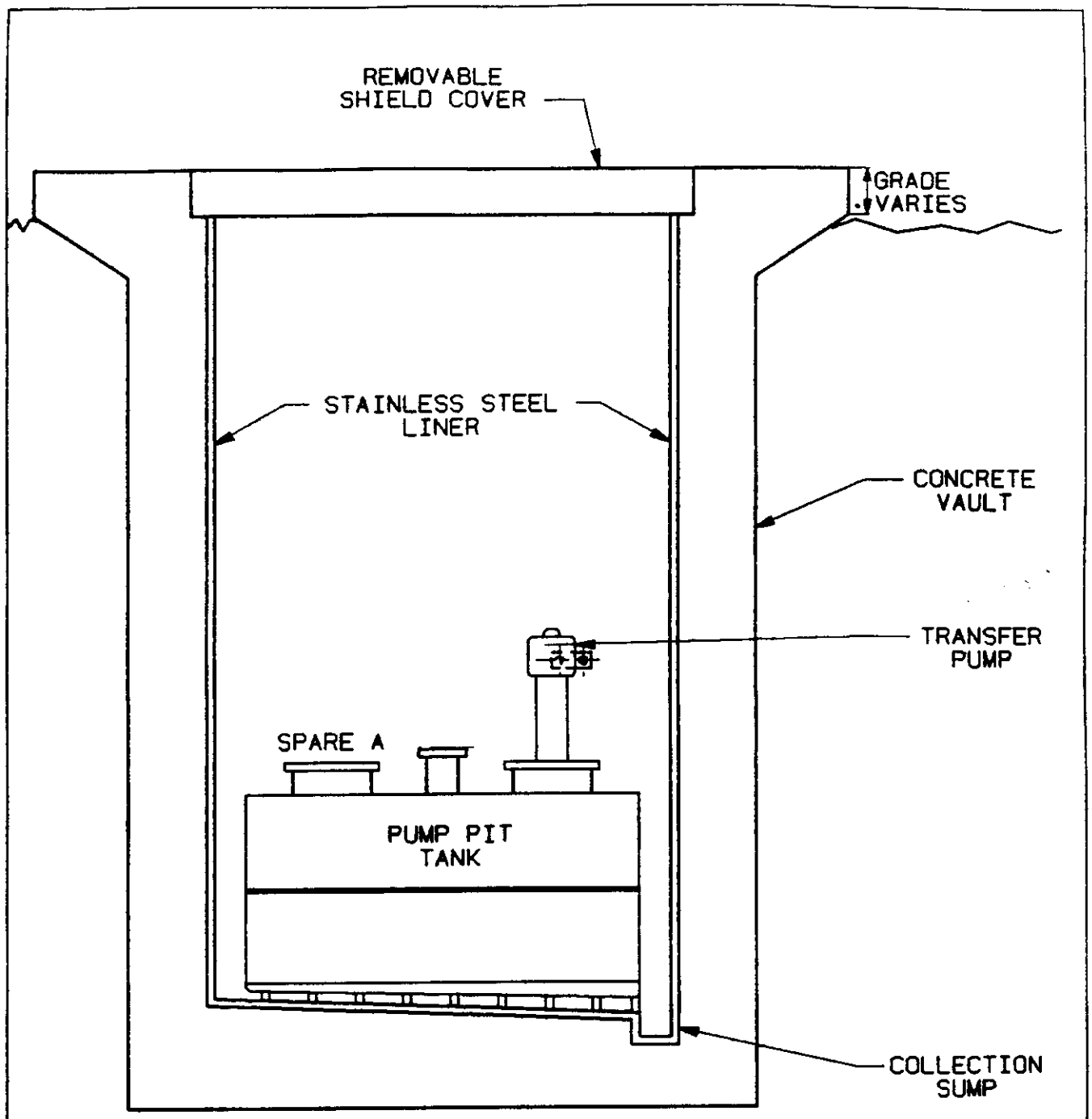

NOTE:

A. A SECOND PUMP MAY BE INSTALLED (OR A JET PUMP INSTALLED THROUGH A NOZZLE) IN ORDER TO PROVIDE BACKUP ABILITY TO EMPTY THE TANK.

CAD NO.	TITLE	NO SCALE
SE5-2-2006190	FIGURE 4-47 TYPICAL PUMP PIT SECTION	6000-44-3190W

TABLE 4-13

TANK FARM PUMP PIT INFORMATION

LOCATION	YEAR CONSTRUCTED	PUMP TANK CAPACITY (GALLONS)	INSTALLED PUMPS	PRIMARY USE
F-Area HLW Tank Farm				
FPP1	1969	5800	Transfer (2) pump	Transfer of waste to H-Area HLW Tank Farm via the F/H Interarea Transfer Line.
FPP2	1978	5800	Transfer pump Jet pump	Intermediate pump station for transfer of wastes from F-Area Separations Facility to F-Area HLW Tank Farm and to transfer wastes within the F-Area HLW Tank Farm.
FPP3	1978	5800	Inactive pump Jet pump	Intermediate pump station for transfer of wastes from F-Area Separations Facility to F-Area HLW Tank Farm and to transfer wastes within the F-Area HLW Tank Farm.
F-CTS	1969	3000	Drawoff pump Recir.pump	Transfer waste through CTS loop to waste concentrate receipt tanks.
H-Area HLW Tank Farm				
HPP1	1956	No Tank	No Pump	Currently used for storage of spare parts
HPP2	1956	5800	Transfer pump Jet pump	Transfer of wastes within the H-Area HLW Tank Farm
HPP3	1956	5800	Transfer (2) pump	Currently used for transfers through the F/H IAL, will be replaced by HPP7 and then be use to transfer waste within the H-Area HLW Tank Farm
HPP4	1956	8500	Transfer pump Jet pump	Transfer of wastes within the H-Area HLW Tank Farm
HPP5	1979	8500	Transfer pump Jet pump	Intermediate pump station for transfer of wastes from H-Area Separations Facility and Building 299-H to H-Area HLW Tank Farm.
HPP6	1979	8500	Transfer pump Jet pump	Intermediate pump station for transfer of wastes from H-Area Separations Facility to H-Area HLW Tank Farm.
HPP7	1990	5800	Transfer (2) pump Jet pump	Transfer of waste to F-Area HLW Tank Farm via the F/H Interarea Transfer Line.
HPP8	1990	5800	Transfer pump Jet pump	Transfer of salt solution, RBOF flush wash, and spent wash water for the ITP and sludge processing operations
HPP9	1990	5800	Transfer pump Jet pump	Will be used in series with HPP5 and HPP6 to transfer waste to various locations in the H-Area HLW Tank Farm
HPP10	1990	5800	Transfer pump Jet pump	Intermediate pump station for the transfer of DWPF Vitrification Facility treated aqueous recycle to the H-Area HLW Tank Farm.

TABLE 4-13 (cont'd)

TANK FARM PUMP PIT INFORMATION

LOCATION	YEAR CONSTRUCTED	PUMP TANK CAPACITY (GALLONS)	INSTALLED PUMPS	PRIMARY USE
H-CTS	1979	3000	Drawoff pump Recir.pump	Transfer waste through CTS loop to waste concentrate receipt tanks.
H/S IAL				
APP1	1990	5800	Transfer pump Jet pump	Intermediate pump station for washed precipitate slurry from Tank 49 to LPPP1.
APP2	1990	5800	Transfer pump Jet pump	Intermediate pump station for treated aqueous recycle from LPPP2 to HDB8.
APP3	1990	5800	Transfer pump Jet pump	Intermediate pump station for washed sludge slurry from Tanks 40 or 51 to LPPP3.
LPPP1	1990	5800	Transfer pump Jet pump	Intermediate pump station for washed precipitate slurry from APP1 to DWPF Vitrification Facility.
LPPP2	1990	5800	Transfer pump Jet pump	Intermediate pump station for treated aqueous recycle from DWPF Vitrification Facility to APP2.
LPPP3	1990	5800	Transfer pump Jet pump	Intermediate pump station for washed sludge slurry from APP3 to DWPF Vitrification Facility.

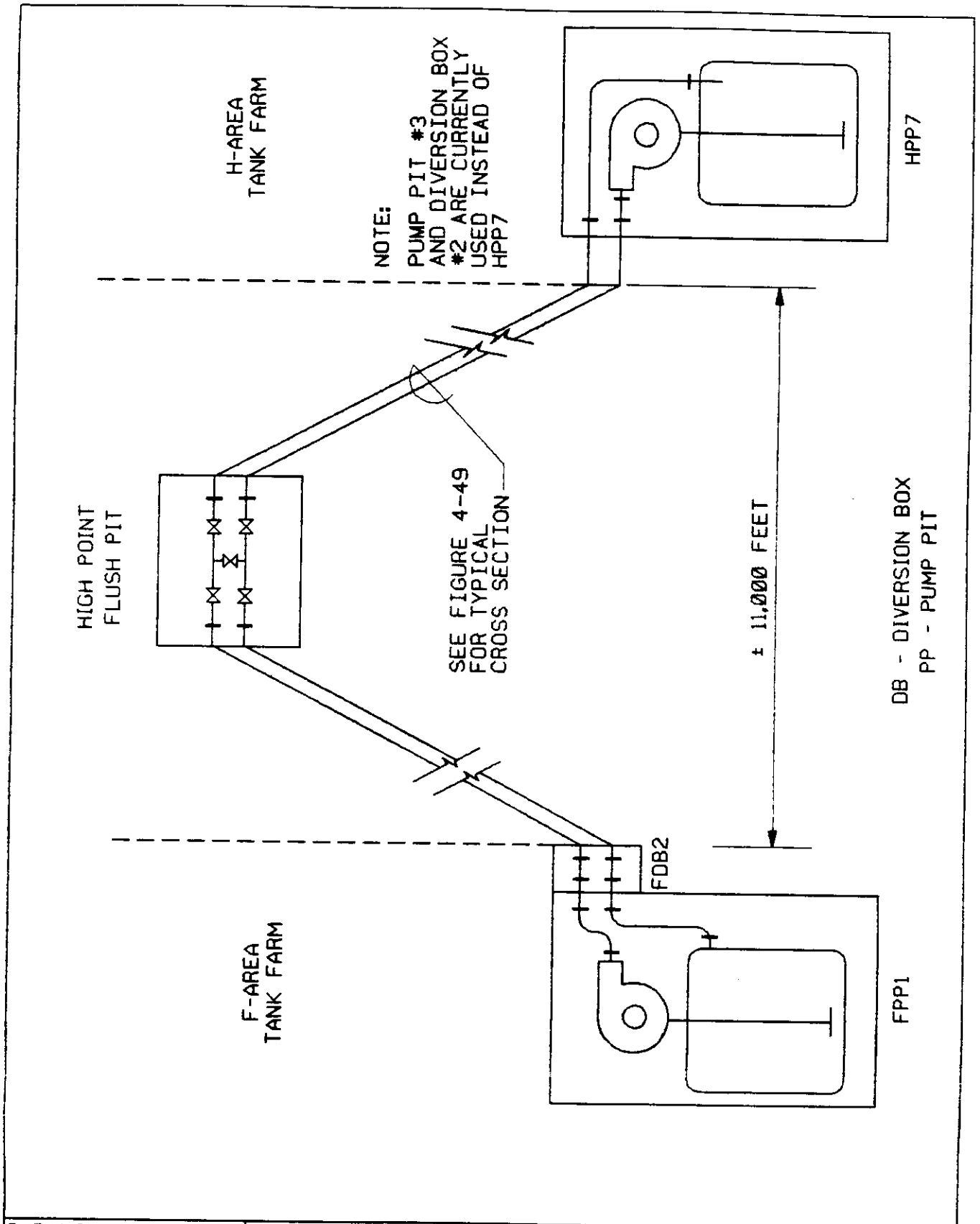

CAD NO.	TITLE	NO SCALE
SE5-2-2006190	FIGURE 4-48 F/H INTERAREA TRANSFER LINE	6000-44-3190W

- Redissolved salt cake from F Area to the ITP reaction vessel (Tank 48) in H Area for processing, and

- Sludge from F Area to the sludge processing vessels (Tank 40, 42, and 51) in H Area for processing.

Currently, FPP1 and HPP3 are used to transfer wastes through the F/H IAL. In the future, HPP3 will be replaced by HPP7 as the H-Area HLW Tank Farm transfer point. These three pump pits contain 100 HP pumps which generate the head required to complete the transfer of waste over the long distances involved. However, some pumps used to transfer waste out of the waste tanks are powerful enough to send the waste through the F/H IAL without the additional support of the pump pits. The pump tanks are always used for IAL drainage.

A cross section of the F/H IAL is provided as Figure 4-49. The 3-inch primary lines are constructed of schedule 40 type 304L stainless steel and are enclosed in separate 4-inch carbon steel pipe jackets for secondary containment. One of the transfer lines is used to transfer wastes from FPP1 to HDB2 (will be HPP7 in the future) via the FPP1 transfer pump and the other transfer line allows wastes to be transferred from HPP3 (will be HPP7 in the future) to FDB2 via the HPP3 (will be HPP7 in the future) transfer pump.

The transfer lines are sloped downward towards each of the pump pits (HPP3 and FPP1) from a high point located approximately midway between F and H Area. A valve box is provided at the high point to introduce flush water into the transfer lines. The sloped transfer line allows waste

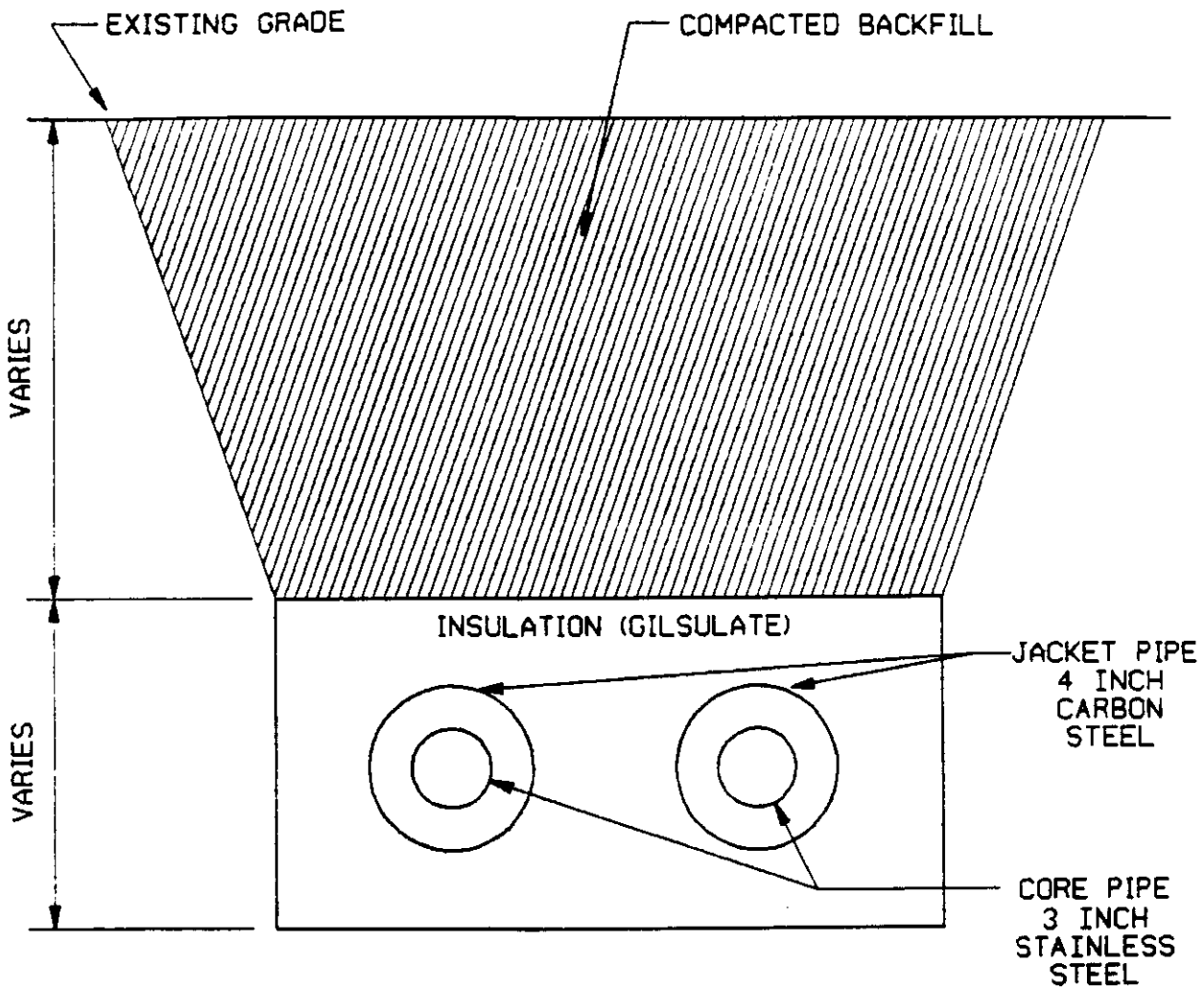

CAD NO.	TITLE	NO SCALE
SE5-2-2006190	FIGURE 4-49 F/H INTERAREA TRANSFER LINE SECTIONS	6000-44-3190W

and flush water to drain to the corresponding pump tank. The accumulated drained fluids are transferred from the pump tank to a waste tank. A valved jumper in the valve box permits the two transfer lines to be interconnected to allow the unused transfer line to serve as a vent line for the other transfer line. This arrangement facilitates draining of wastes from the transfer line. The valve box is also equipped with a sump pump which allows any accumulated liquids to be pumped into either of the transfer lines.

4.8.6 H/S Interarea Transfer Line

The H/S Interarea Transfer Line (IAL) connects the H-Area HLW Tank Farm to the S-Area DWPF Vitrification Facility. The H/S IAL consists of four 3-inch diameter stainless steel transfer lines, a Low Point Pump Pit (LPPP), and an Auxiliary Pump Pit (APP). A schematic diagram and layout for the H/S IAL is shown on Figure 4-50. The detailed alignment for the H/S IAL is provided on Figure 2-5 (contained in pocket sleeve). The waste transferred includes:

- The washed ITP precipitate slurry from Tank 49 to the DWPF Vitrification Facility,
- The washed sludge slurry from Tanks 40 and 51 to the DWPF Vitrification Facility,
- The treated aqueous recycle from the DWPF Vitrification Facility to the HDB8.

Figure 4-51 provides a typical cross section for the H/S IAL. The four pipelines are arranged as two double-core jacketed configurations. Each of the these waste streams is transported in a separate dedicated transfer line. The

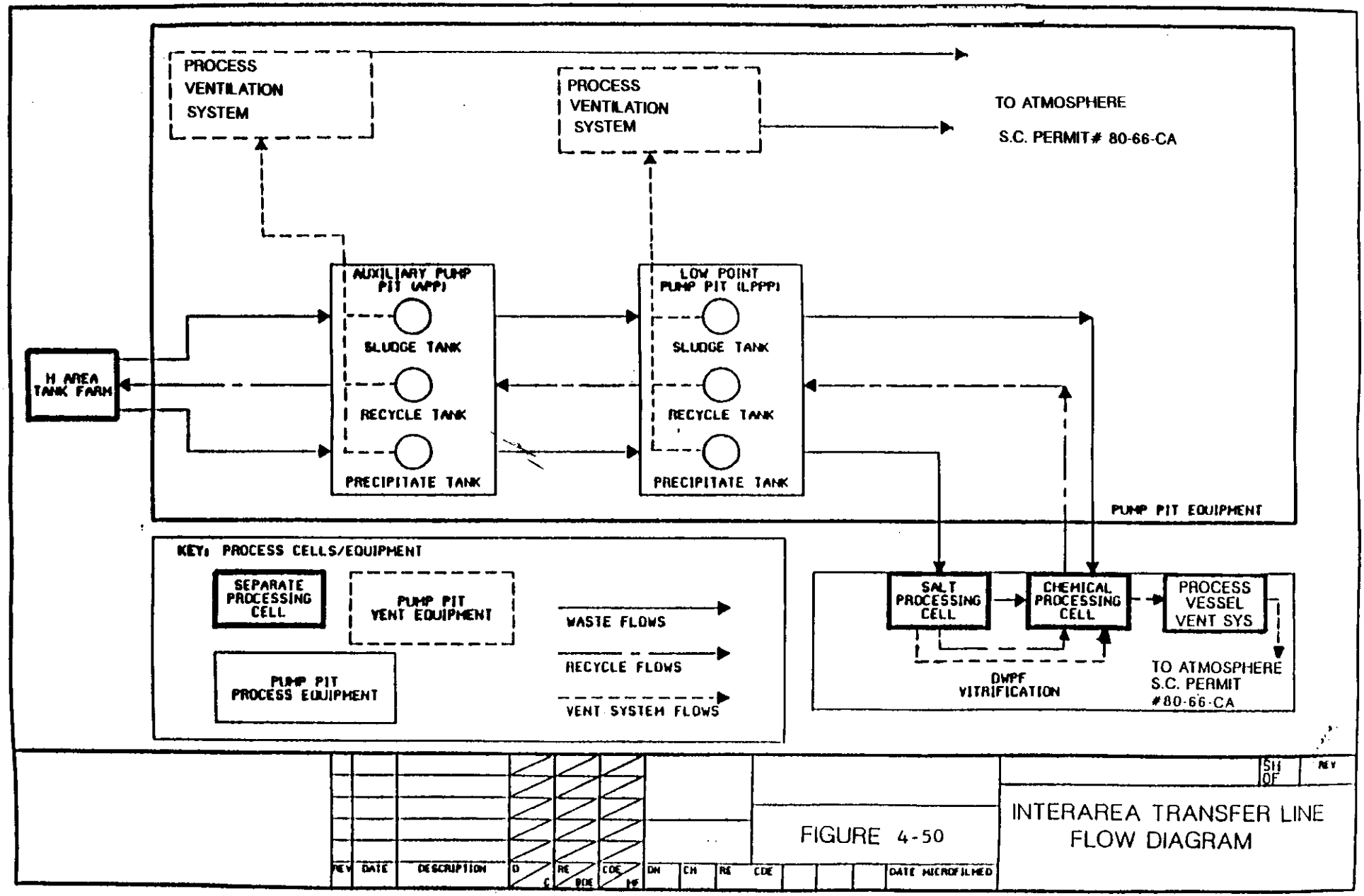

FIGURE 4-50

INTERAREA TRANSFER LINE FLOW DIAGRAM

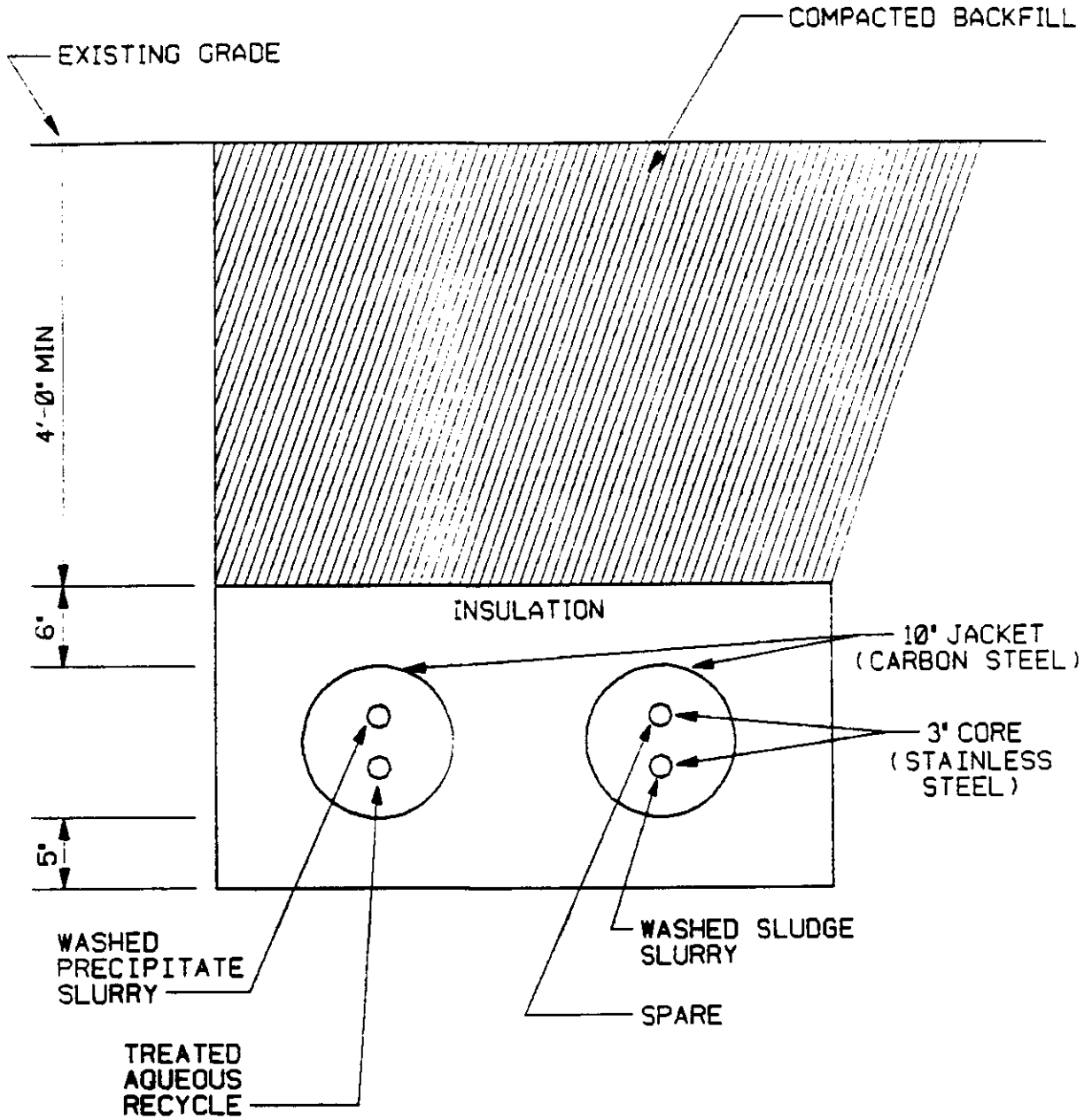

CAD NO.	TITLE	NO SCALE
SE5-2-2006190	FIGURE 4-51 H/S INTERAREA TRANSFER LINE TYPICAL SECTION	6000-44-3190W

fourth transfer line was installed as a spare. The washed sludge slurry line and spare line are located together in one jacket. The treated aqueous recycle line and washed precipitate slurry line are in the second jacket.

Waste transfers through the H/S IAL are initiated at several locations. The transfer of the washed precipitate slurry begins at Tank 49 with the waste tank transfer pump. The slurry then flows through intermediate pump stations APP1 and LPPP1 prior to reaching the DWPF Vitrification Facility. The transfer of the washed sludge slurry begins at either Tank 40 or 51 with the waste tank transfer pump. The slurry then flows through intermediate pump stations APP3 and LPPP3 prior to reaching the DWPF Vitrification Facility. The transfer of the treated aqueous recycle begins at the DWPF Vitrification Facility. This waste stream flows through intermediate pump stations LPPP2 and APP2 prior to reaching HDB8. From HDB8, the treated aqueous recycle can be transferred to an appropriate waste tank.

The intermediate pump stations (APP and LPPP) are required due to the viscosity of the precipitate and sludge slurries being transferred. Both the LPPP and the APP have three dedicated 5800 gallon pump tanks. One tank handles the sludge slurry feed to the DWPF Vitrification Facility, another handles the treated aqueous recycle from the DWPF Vitrification Facility, and the remaining pump tank is for the precipitate slurry feed to the DWPF Vitrification Facility. The specifications for the LPPP and APP pump tanks are summarized in Section 7.7.
The pump pits are below grade and are enclosed within a steel frame building for weather protection and ventilation control. Each pump pit location also has a flush water tank for flushing of lines and vessels within

the pump pit building.

The pump tanks at each pump pit location are housed separately in adjacent stainless steel lined concrete cells. The cells are lined with stainless steel to provide secondary containment. Additional details for the secondary containment system are provided in Appendix C.

4.9 Backup Power Provisions

The electrical distribution system is designed to automatically provide power to essential equipment and instruments in the event of an electrical power outage, through the use of back-up diesel generators. The diesel generators are used during power outages to operate the ventilation systems, cooling systems, and required instruments. Essential equipment, such as ventilation fans on tanks, evaporator cell, pump pits, and diversion boxes are equipped with time delay relays. These relays will maintain power connection to the equipment for 15 seconds following normal loss of power. The 15-second relay time is adequate to allow diesel generators to start and transfer switches to operate. Four diesel generators (two 350 kilowatt, one 250 kilowatt and one 200 kilowatt) are currently available for the F-Area HLW Tank Farm (SCDHEC Air Quality Permit #0080-0045). Four diesel generators (one 500 kilowatt, one 275 kilowatt, one 250 kilowatt and one 200 kilowatt) are currently available for the H-Area HLW Tank Farm (SCDHEC Air Quality Permit #0080-046). Additional diesel generators will be added as required.

A power failure will interrupt operation of waste evaporators, but will not result in a hazardous condition. Should the electrical power or air supply to the evaporator be lost, the feed to the evaporator pot and steam flow to the tube bundle will be automatically stopped. The evaporator can be emptied, rinsed with flush water, and safely shut down using the emergency power system. The following steps may be taken without use of any (normal or back-

up) electricity to avoid formation of salt cake in vessels and transfer lines during evaporator operation: (1) continue to steam heat the waste concentrate pump tank and add flush water by gravity flow or, (2) allow the waste concentrate in the transfer lines to gravity drain back to the waste concentrate pump tank.

The mechanical transfer pumps are not on back-up power. However, waste transfers could be made, if require, by using the jet pumps in the event of electrical power outage. The transfer lines can also be cleared of waste by gravity flow of flush water. Adequate freeboard is maintained in pump pits and other transferring vessels to permit the wastes within the transfer lines to drain back without overflow.

The cooling systems for the waste tanks are also provided with back-up power from the diesel generators.

5.0 WASTE CHARACTERISTICS

The SRS produces special nuclear materials for national defense. Like most industrial processes, the production of special nuclear materials is accompanied by the generation of waste materials. Some of the wastewaters generated by SRS are highly radioactive and must be safely isolated to prevent potential exposure. These wastewaters are managed at the F and H-Area HLW Tank Farms. This section provides characterization information for the influent wastes processed at and effluent/by-product wastes generated by the F and H-Area HLW Tank Farms.

The influent waste streams include:

- F-Area Separations Facility high-heat waste,
- H-Area Separations Facility high-heat waste,
- F-Area Separations Facility low-heat waste,
- H-Area Separations Facility low-heat waste,
- Receiving Basin for Offsite Fuels (RBOF) and Resin Regeneration Facility (RRF) waste,
- SRL laboratory waste,
- Reactor filter backwash,
- Building 299-H decontamination solution,
- DWPF Vitrification Facility treated aqueous recycle,
- Incidental wastes, and
- Process Chemicals.

The characteristics of these influent waste streams are described in Section 5.1.

The effluent/treated by-product waste streams include:

- Evaporator overheads,
- Treated RBOF/RRF waste stream,
- Washed precipitate slurry,
- Decontaminated salt solution, and
- Washed sludge slurry.

All of the treated by-product waste streams are the wastewater feeds for the other integrated treatment facilities. These wastewater feeds are produced by the initial wastewater treatment activities conducted at the F and H-Area HLW Tank Farms. The characteristics of these effluent waste streams are described in Section 5.2.

The F and H-Area HLW Tank Farms are designed and operated to remove and treat radionuclides from the wastewaters. Therefore, the waste characterization information provided in Sections 5.1 and 5.2 is presented to demonstrate that the treatment processes are effective in removing radionuclides. Since the F and H-Area HLW Tank Farms do not have a discharge to surface water, the traditional wastewater analytical parameters (i.e., BOD, COD, IDOD, etc.), have not been analyzed for the influent and effluent waste streams. Parameters for discharging wastewater to Upper Three Runs Creek are analyzed at the F/H ETF outfall as required by NPDES permit #SC0000175.

5.1 Influent Waste Characterization

The F and H-Area Separations Facilities are the major generating sources, in terms of radionuclides, of the influent wastes received at the Tank Farms. These facilities generate wastes during the recovery and purification of special nuclear materials. Within the SRS reactors, special long tubes (called targets) are irradiated to produce useful radionuclides. These target assemblies as well as the fuel assemblies are dissolved in acid at the F and H-Area Separations Facilities. The useful radionuclides are extracted from

the mixture and the remaining materials are sent to the F and H-Area HLW Tank Farms as wastes.

The typical characteristics of each influent waste stream are provided in the sections that follow. Within the waste tanks, the influent waste streams generally separate into a sludge and supernate fraction. In addition to this gravity settlement, the chemical and radionuclide compositions of these wastes change with time. These changes result from:

- Addition of fresh wastes,
- Radiolytic decomposition of $NaNO_3$ to $NaNO_2$,
- Decomposition of NaOH in the presence of atmospheric carbon dioxide to form Na_2CO_3,
- Concentration of waste through evaporation,
- Processing of waste (i.e., ITP and sludge processing), and
- Decay of radionuclides.
- Addition of process chemicals.

5.1.1 F and H Area Separations Facilities High-Heat Wastes

The HHW waste streams generated from the F and H-Area Separations Facilities contain the majority of the radionuclides. These HHW waste streams are generated during the first extraction cycle conducted in the F and H-Area Separations Facilities. HHW is typically composed of approximately 64% water, 32% soluble salts, and 4% insoluble material on a weight basis. The insoluble wastes (sludge) consists primarily of metal hydroxides (manganese, iron, and aluminum), mercury, and most of the radionuclides except for cesium. The supernate contains primarily sodium salts (nitrate, nitrite, aluminate, and hydroxide) and radioactive cesium.

The thermal energy in HHW (resulting from radioactive decay) requires that supplemental cooling (i.e., cooling coils) be used in the HHW receipt tanks to maintain the waste temperature within operating guidelines. As received at the tank farms, fresh HHW normally contains radioactive fission products which produce decay heat of 5 to 16 Btu/hour-gal.

The characterization data for the HHW is summarized in Tables 5-1 (F Area) and 5-2 (H Area). Based upon actual waste records for 1986 to 1989, it is estimated that the HHW accounts for approximately 8% of the total influent waste volume.

5.1.2 F and H-Area Separations Facilities Low-Heat Wastes

The LHW are primarily generated by the second and subsequent extraction cycles conducted in the Separations Facilities, and the initial removal of aluminum cladding from the reactor fuel and target assemblies. LHW is an aqueous slurry containing radionuclides. LHW is typically comprised of approximately 70% water, 26% soluble salts, and 4% insoluble sludges on a weight basis. The insoluble wastes (sludge) consists primarily of metal hydroxides (manganese, iron, and aluminum), mercury, and most of the radionuclides except for cesium. The supernate contains primarily sodium salts (nitrate, nitrite, aluminate, and hydroxide) and radioactive cesium.

TABLE 5-1

F-AREA HIGH-HEAT TYPICAL WASTE CHARACTERIZATION

Component/ Parameter	Typical Concentration Range
Water (wt. %)	55 - 89
Solubles[a] (wt. %)	10 - 40
Insolubles[b] (wt. %)	1 - 5
pH (standard units)	12 - 14
Total Carbon (mg/l)	n/a
Radionuclides (Ci/gal)	0.1 - 470

Notes:

[a] The soluble components are primarily sodium salts with hydroxide, nitrite, and nitrate anions. These three anionic compounds account for more than 95% of the soluble components present in the waste stream.

[b] The insoluble components are a complex mixture of hydrated metal oxides that are formed when the waste is neutralized with sodium hydroxide to allow storage within the F and H-Area waste tanks. The principal compounds present are hydrated oxides of iron, aluminum, manganese, nickel, uranium, thorium, and mercury. Trace quantities of spent process chemicals and fission products are also present in the tank sludge.

TABLE 5-2

H-AREA HIGH-HEAT TYPICAL WASTE CHARACTERIZATION

Component/ Parameter	Typical Concentration Range
Water (wt. %)	50 - 89
Solubles[a] (wt. %)	10 - 45
Insolubles[b] (wt. %)	1 - 5
pH (standard units)	12 - 14
Total Carbon[c] (mg/l)	1.62
Radionuclides (Ci/gal)	844 - 1191

Notes:

[a] The soluble components are primarily sodium salts with hydroxide, nitrite, and nitrate anions. These three anionic compounds account for more than 95% of the soluble components present in the waste stream.

[b] The insoluble components are a complex mixture of hydrated metal oxides that are formed when the waste is neutralized with sodium hydroxide to allow storage within the F and H-Area waste tanks. The principal compounds present are hydrated oxides of iron, aluminum, manganese, nickel, uranium, thorium, and mercury. Trace quantities of spent process chemicals and fission products are also present in the tank sludge.

[c] Total carbon measurement made only once on one set of samples values reported represent result of that single analysis.

Fresh LHW produces decay heat ranging from 0.2 to 0.8 Btu/hour-gallon. Unlike HHW, fresh LHW does not require supplemental cooling for the receipt tanks.

The typical composition of the LHW are presented in Tables 5-3 (F Area) and 5-4 (H Area). Based upon actual waste receipt records for 1986 to 1989, it is estimated that the LHW accounts for approximately 19% of the total influent waste volume.

5.1.3 Receiving Basin For Offsite Fuel Waste and Resin Regeneration Facility Waste

Wastes from the RBOF facility are primarily generated from three sources: (1) the cleaning of fuel and target elements, (2) the flushing of reactor assembly containers, and (3) flush water from failed reactor assemblies. The fuel and target elements are cleaned with a cleaning solution to remove hydrated aluminum oxide from tritium target elements. The RBOF operations are conducted in Building 244-H located in H Area.

The RRF (Building 245-H) is adjacent to the RBOF building and houses equipment used to regenerate spent ion-exchange resins. Wastes from the RRF are generated from the portable deionizers in the reactor areas and ion-exchange units located at the RBOF facility. The spent ion exchange resins are regenerated using sodium hydroxide and nitric acid. This waste stream is combined with the RBOF waste stream.

The combined RBOF/RRF waste stream is sampled and analyzed at the RBOF building for radioactivity (Cs-137). Based on

TABLE 5-3

F-AREA LOW-HEAT TYPICAL WASTE CHARACTERIZATION

Component/ Parameter	Typical Concentration Range
Water (wt. %)	60 - 94
Solubles[a] (wt. %)	5 - 35
Insolubles[b] (wt. %)	1 - 5
pH (standard units)	12 - 14
Total Carbon[c] (mg/l)	354
Radionuclides (Ci/gal)	<2

Notes:

[a] The soluble components are primarily sodium salts with hydroxide, nitrite, and nitrate anions. These three anionic compounds account for more than 95% of the soluble components present in the waste stream.

[b] The insoluble components are a complex mixture of hydrated metal oxides that are formed when the waste is neutralized with sodium hydroxide to allow storage within the F and H-Area waste tanks. The principal compounds present are hydrated oxides of iron, aluminum, manganese, nickel, uranium, thorium, and mercury. Trace quantities of spent process chemicals and fission products are also present in the tank sludge.

[c] Total carbon measurement made only once on one set of samples values reported represent result of that single analysis.

TABLE 5-4

H-AREA LOW-HEAT TYPICAL WASTE CHARACTERIZATION

Component/ Parameter	Typical Concentration Range
Water (wt. %)	55 - 94
Solubles[a] (wt. %)	5 - 40
Insolubles[b] (wt. %)	1 - 5
pH (standard units)	12 - 14
Total Carbon[c] (mg/l)	2
Radionuclides (Ci/gal)	40 - 56

Notes:

[a] The soluble components are primarily sodium salts with hydroxide, nitrite, and nitrate anions. These three anionic compounds account for more than 95% of the soluble components present in the waste stream.

[b] The insoluble components are a complex mixture of hydrated metal oxides that are formed when the waste is neutralized with sodium hydroxide to allow storage within the F and H-Area waste tanks. The principal compounds present are hydrated oxides of iron, aluminum, manganese, nickel, uranium, thorium, and mercury. Trace quantities of spent process chemicals and fission products are also present in the tank sludge.

[c] Total carbon measurement made only once on one set of samples values reported represent result of that single analysis.

the radioactivity measurement, the disposition of the RBOF/RRF waste is as follows:

- Waste with an activity level less than 100,000 disintegrations per minute per milliter (Cs-137) is sent to Tank 23. The combined waste is either processed through the CRC for cesium removal or transferred to LHW evaporator prior to transfer to the F/H ETF. [Additional details regarding the disposition of the treated RBOF/RRF waste stream are contain in Section 5.2.2], and

- Waste with an activity level between 100,000 and 100,000,000 disintegrations per minute per milliter (Cs-137) is sent to Tank 21 for evaporation or use as process water. The combined waste is either transferred to an evaporator feed tank for subsequent evaporation or is used for salt cake removal operations.

Table 5-5 presents analytical data for this waste stream. Based upon actual waste receipt records for 1986 to 1989, it is estimated that the RBOF/RRF accounts for approximately 12% of the total influent waste volume.

5.1.4 SRL Laboratory Waste

Wastes from the SRL laboratory facilities (i.e., Building 773-A) are generated from studies and tests performed to support SRS operations. The laboratory wastes are transported by truck to the F-Area Separations Facility and unloaded within an enclosed area located in the Canyon (Building 211-F). The wastes are combined with the F-Area Separations Facility LHW waste stream for processing at the Tank Farms. Generally, it is necessary to unload these laboratory wastes within an enclosed area that has a ventilation system with HEPA filtration in order to

TABLE 5-5

RECEIVING BASIN FOR OFFSITE FUEL AND
RESIN REGENERATION FACILITY
TYPICAL WASTE CHARACTERIZATION

Component/ Parameter	Typical Concentration Range
Water (wt. %)	91 - 99
Solubles (wt. %)	1 - 8
Insolubles (wt. %)	0 - 1
pH (standard units)	12 - 14
Total Carbon[a] (mg/l)	94
Radionuclides (Ci/gal)	1.7E-6 - 1.7E-4

Notes:

[a] Total carbon measurement made only once on one set of samples values reported represent result of that single analysis.

prevent the release of the alpha-emitting radionuclides which are contained in the wastes. Some SRL waste contains very low level radioactivity that can be unloaded at the Tank 47 truck unloading facility.

The laboratory wastes consist primarily of dilute sodium nitrate solutions. Table 5-6 presents the typical waste characteristics for the SRL Laboratory Waste which is received at the Tank Farms. Based upon actual waste receipt records for 1986 to 1989, it is estimated that the SRL Laboratory wastes account for less than 1% of the total influent waste volume.

5.1.5 Reactor Filter Backwash

Reactor fuel and target tubes are handled at each reactor facility in large disassembly basins filled with water to prevent release of radioactive materials. The basin water is circulated through sand filters, which are periodically backwashed to remove radioactive particles. The backwash water and associated residues are sent to a holding tank to allow the solids to settle to the bottom. The liquid portion of the backwash is recycled back to the disassembly basin. The backwash residues (consisting primarily of alum, sand, and anthracite) are trucked to a waste tank (Tank 47) located in the F-Area HLW Tank Farm. Tank 47 is equipped with a covered unloading facility. Unlike the SRL laboratory wastes, the reactor filter backwash does not contain alpha-emitting radionuclides; therefore, enclosed unloading operations are not required.

TABLE 5-6

SRL LABORATORY
TYPICAL WASTE CHARACTERIZATION

Component/ Parameter	Typical Concentration Range
Water (wt. %)	95 - 99
Solubles (wt. %)	1 - 4
Insolubles (wt. %)	0 - 1
pH (standard units)	12 - 14
Total Carbon (mg/l)	1 - 170
Radionuclides (Ci/gal)	2.0E-6 - 1.74E-4

Table 5-7 presents the typical waste characteristics for this waste stream. Based upon actual waste receipt records for 1986 to 1989, it is estimated that the reactor filter backwash waste stream accounts for less than 1% of the total influent waste volume.

5.1.6 Building 299-H Decontamination Solution

The decontamination solution from Building 299-H is generated during the decontamination and cleaning of Tank Farm equipment prior to repair. The waste solution is transferred to waste tanks located in the H-Area HLW Tank Farm.

Table 5-8 presents the typical characteristics for the waste decontamination solution. Based upon actual waste receipt records for 1986 to 1989, it is estimated that the decontamination solution accounts for approximately 2% of the total influent waste volume.

5.1.7 DWPF Vitrification Facility Treated Aqueous Recycle

Radioactive liquid wastes generated during the DWPF Vitrification Facility operations are returned to the H-Area HLW Tank Farm for reprocessing.

The data used to characterize the DWPF Vitrification Facility waste is based upon a predicted material balance. Following initiation of operations at the DWPF Vitrification Facility, a treated aqueous recycle sample will be collected and analyzed to confirm the waste characterization. The predicted composition of the treated aqueous recycle is presented in Table 5-9. Based

TABLE 5-7

REACTOR FILTER BACKWASH
TYPICAL WASTE CHARACTERIZATION

Component/ Parameter	Typical Concentration Range
Water (wt. %)	87 - 99
Solubles (wt. %)	1 - 8
Insolubles (wt. %)	0 - 5
pH (standard units)	12 - 14
Total Carbon[a] (mg/l)	42
Radionuclides (Ci/gal)	0 - 1.7E-5

Notes:

[a] Total carbon measurement made only once on one set of samples values reported represent result of that single analysis.

TABLE 5-8

BUILDING 299-H DECONTAMINATION SOLUTION
TYPICAL WASTE CHARACTERIZATION

Component/ Parameter	Typical Concentration Range
Water (wt. %)	85 - 99
Solubles (wt. %)	2 - 14
Insolubles (wt. %)	0 - 1
pH (standard units)	12 - 14
Total Carbon[a] (mg/l)	1140
Radionuclides (Ci/gal)	1.7E-6 - 8.5E-5

Notes:

[a] Total carbon measurement made only once on one set of samples values reported represent result of that single analysis.

TABLE 5-9

DWPF VITRIFICATION FACILITY
TREATED AQUEOUS RECYCLE
TYPICAL WASTE CHARACTERIZATION

Component/ Parameter	Typical Concentration Range[a]
Water (wt. %)	85 - 99
Solubles[b] (wt. %)	1 - 10
Insolubles[c] (wt. %)	0 - 5
pH (standard units)	12 - 14
Total Carbon (mg/l)	n/a
Radionuclides (Ci/gal)	0.2 - 2.0

Notes:

[a] Values are predicted from material balances compiled from laboratory and bench scale testing. The DWPF Cold runs waste will approximate these concentrations with the exception that radionuclides will not be present.

[b] The soluble components are primarily sodium salts with hydroxide, nitrite, and nitrate anions. These three anionic compounds account for more than 95% of the soluble components present in the waste stream.

[c] The insoluble components are primarily small glass particles from the vitrification off-gas scrubber and mercury compounds (less than 0.1 wt. % of the waste stream) which precipitate when the corrosion inhibitors (i.e., NaOH, $NaNO_2$) are added to the waste stream.

upon the predicted material balance, it is estimated that the DWPF Vitrification Facility treated aqueous recycle will account for approximately 43% of the total influent waste volume.

The start-up of the DWPF Vitrification Facility is to be conducted over an 18 month period to evaluate the process operations prior to handling radioactive waste. This start-up/evaluation period is known as Cold Runs and will consist of testing approximately six batches of non-radioactive and one batch of radioactive simulation wastes. Approximately 170,000 to 260,000 gallons of an aqueous effluent will be generated for each of these tests. During normal operations, this aqueous effluent will be recycled to the H-Area HLW Tank Farm via the H/S IAL (Building 221-S to HDB8). However, the H/S IAL is not scheduled to operational prior to commencing Cold Runs. Therefore, a tank truck will be used to transport the wastewaters generated by the Cold Runs to the F-Area HLW Tank Farms unloading area (Tank 47) until the H/S IAL becomes operational.

The predicted characteristics of the Cold Runs wastewater will be similar to the characteristics provided in Table 5-9 since the simulation wastes will have a composition (except for radionuclides) similar to actual wastes. Additional details of the Cold Runs program are provided in the DWPF Wastewater Permit Application - Cold Run Addendum (WSRC, 1990B).

5.1.8 Incidental Wastes

Several other waste streams will be added to the Tank Farms on a regular basis. These incidental waste streams include:

- Inhibited process water used for sludge/salt cake removal and processing,
- F/H ETF waste concentrate,
- Accumulated liquids from secondary containment structures,
- Water used to flush transfer lines, vessels, and containment structures, and
- Residues resulting from flushing/cleaning/closure of waste tanks and other Savannah River Site facilities.

The largest volume of incidental waste introduced into the Tank Farms is inhibited water which is used for sludge/salt cake removal and processing. Inhibited water is well water that contains sodium hydroxide and sodium nitrite to inhibit stress-corrosion cracking of the waste tanks. The volume of inhibited process water used is dependent upon the level of waste processing (i.e., sludge and salt cake) and the availability of process water substitutes (i.e., spent wash water from sludge processing and RBOF/RRF wastewater).

The F/H ETF waste concentrate is normally transferred to Tank 50 for subsequent transfer to the Z-Area SMDF. On occasion, the radioactivity may exceed the permitted or SRS established limits for Tank 50 and the Z-Area SMDF. In these instances the F/H ETF waste concentrate is recycled to a waste tank for reprocessing.

In addition, wastewaters which have excessive levels of radioactivity may be diverted from the F/H ETF to the Tank Farms for treatment.

Secondary containment structures are provided for a majority of the waste handling equipment (i.e., waste tanks, transfer lines, diversion boxes, etc.). The containment structures are sloped to collection sumps to facilitate the removal of accumulated liquids. Water from condensation and, in some containment structures, ground water and/or rain water infiltration accumulates in the sumps. These liquids are periodically transferred to a waste tank or pump pit tank, or in some cases the accumulated water is sent to the F/H ETF or retention basin.

After completion of a waste transfer, the transfer lines are flushed with water to remove waste materials. Process equipment (e.g., evaporator systems, ITP units) and containment structures are cleaned with flush water periodically. Flush water is introduced into the transfer lines and process equipment via valved connections. Spray nozzles are used to wash down the surface of the containment structure to remove any spillage/leakage. The flush water and waste residues are transferred (gravity or pump) to a waste tank. No characterization information is required for the spent flush water, since it is nothing more than a dilute form of the previously described waste streams.

Some of the existing waste tanks are to be emptied, decontaminated and removed from service. Process chemicals (see Section 5.1.9) may be used to remove waste residues. The residues/process chemicals will be transferred to an active waste tank for processing. Since

this waste stream will consist of process chemicals and residues of waste which already exist within the tanks, no additional analytical information is required.

Based upon actual records for 1986 to 1989, it is estimated that these incidental wastes account for approximately 14% of the total influent waste volume.

5.1.9 Process Chemicals

Several process chemicals are used for various purposes at the Tank Farms. The process chemicals which are currently being used at the Tank Farms include:

- Sodium tetraphenylborate (ITP),
- Sodium titanate (ITP),
- Sodium hydroxide and sodium nitrite (inhibition of stress-corrosion cracking and pitting corrosion, aluminum dissolution, salt cake removal, sludge washing, waste tank cleaning, and equipment decontamination),
- Oxalic acid (waste tank cleaning and equipment decontamination),
- Nitric acid (waste tank cleaning and equipment decontamination),
- SC-200 [Anionic surfactants and butoxyethanol] (waste tank cleaning and equipment decontamination),
- 67-100 Steam Cleaner [Sodium metasilicate and sodium hydroxide] (waste tank cleaning and equipment decontamination), and
- Synthetic zeolite [alumina silicate] (CRC).

Other process chemicals may be used in the future as a replacement for the above mentioned process chemicals or to serve a new process. For example, resorcinol/ formaldehyde condensation polymer is being considered as

an alternative to the synthetic zeolite which is currently being used as the CRC ion-exchange resin. As stated in Section 4.2, the addition of process chemicals which do not cause the effluent waste characterization to exceed the permitted or SRS established limits for Tank 50, the DWPF Vitrification Facility or F/H ETF, is considered part of normal operations.

Based upon actual records for 1986 to 1989, the above listed process chemicals account for approximately 2% of the total influent waste volume.

5.2 Effluent and Treated By-Product Waste Characterization

The effluent and treated by-product wastes generated by the evaporators, ITP, and sludge processing operations include: evaporator overheads, washed precipitate slurry, decontaminated salt solution, washed sludge slurry, and treated RBOF/RRF waste. These effluent and treated by-product wastes are not discharged to the environment; they are sent to other SRS treatment facilities for additional processing prior to disposal or discharge. The typical annual generation volume for each effluent waste stream is provided as Table 5-10.

Waste characterization information for the washed precipitate slurry, decontaminated salt solution, and washed sludge slurry are based on laboratory and bench scale studies using non-radioactive simulation wastes. These simulation wastes were used to eliminate

TABLE 5-10

EFFLUENT/TREATED BY-PRODUCT GENERATION RATES

EFFLUENT WASTE STREAM	AVERAGE GENERATION RATE (GALLONS/YEAR)	MAXIMUM GENERATION RATE (GALLONS/YEAR)
Evaporator Overheads	7,000,000	29,000,000
Treated RBOF/RRF Wastes[a]	---	---
Washed Precipitate Slurry	400,000	800,000
Decontaminated Salt Solution	7,155,000	13,000,000
Washed Sludge Slurry	400,000	500,000

Notes:

[a] The average and maximum generation rates included with the evaporator overheads waste stream.

the potential risk of exposing employees to radiation while conducting experiments. Material balances were developed based upon the results of the simulated waste studies. Samples of the actual effluent wastes will be collected upon full scale start-up of the ITP and sludge processing operations. These samples will be analyzed to confirm the predicted characterization information. Waste characterization information for the evaporator overheads and treated RBOF/RRF waste is based upon actual sample results.

5.2.1 Evaporator Overheads

The dissolved solids contained in the LHW and aged HHW are removed through evaporation. The water which is evaporated (evaporator overheads) is condensed and transferred to the F/H ETF for final treatment and discharge to Upper Three Runs Creek. If radioactivity levels are above the permissible limits, the evaporator overheads are diverted to a waste tank. Section 4.4 provides a detailed description of the evaporation process.

The typical waste characteristics for the evaporator overheads are summarized in Table 5-11. The concentration of the radionuclides is up to a factor of 4×10^9 less than the largest concentration contained in the influent waste streams. This value demonstrates that a significant amount of treatment has occurred. It is estimated that the evaporator overheads account for approximately 47% of the total effluent/treated by-product waste volume

TABLE 5-11

EVAPORATOR OVERHEADS

TYPICAL WASTE CHARACTERIZATION

Component/ Parameter	Typical Concentration Range
Water (wt. %)	97 - 100
Solubles (wt. %)	0 - 3
Insolubles (wt. %)	0
pH (standard units)	8 - 12
Total Carbon[a] (mg/l)	22
Radionuclides (Ci/gal)	3.4E-7 - 1.0 x 10^{-5}

Note:

[a] Total carbon measurement made only once on one set of samples values reported represent result of that single analysis.

5.2.2 Treated RBOF/RRF Waste

The combined waste stream from the RBOF and the RRF is transferred to a holding tank (Tank 21 or 23). The RBOF/RRF waste which has an activity level less than 100,000 disintegrations per minute per milliter (Cs-137) is sent to Tank 23 and combined with the evaporator overheads from the 242-H evaporator system within the CRC pump tank prior to being processed through the CRC. The 242-H CRC is currently being used until the replacement evaporator system is operational. The treated RBOF/RRF/Overheads waste stream is transferred to the evaporator overheads hold tanks for sampling and analysis. Acceptable wastes are transferred to the F/H ETF and unacceptable wastes are recycled back to Tank 23. The concentration of radionuclides between the influent RBOF/RRF and the treated RBOF/RRF/Overheads waste stream is reduced by a factor up to 500. Because the RBOF/RRF waste is combined with evaporator overheads for processing through the CRC, the treated waste has the same characteristics as provided in Table 5-11.

5.2.3 Washed Precipitate Slurry

The washed precipitate slurry is generated by the processing of the salt cake accumulated in the waste tanks. Inhibited water will be used to dissolve the salt cake. The resulting salt solution will be transferred to the ITP reaction vessel (Tank 48) and subjected to a process consisting of precipitation and separation technologies.

At the ITP facility, the salt solution will be treated with sodium tetraphenylborate to precipitate cesium and potassium. An aqueous slurry of sodium titanate may also be added to absorb strontium and plutonium. After filtering, the resulting precipitate slurry will be washed to remove any remaining

soluble salts and excess process chemicals (i.e., sodium tetraphenylborate). The washed precipitate slurry will subsequently be transferred to the DWPF Vitrification Facility for additional processing. Section 4.5 presents a detailed description of the ITP process.

An inventory (up to 1 million gallons) of the washed precipitate slurry will be maintained at the H-Area HLW Tank Farm to provide the precipitate slurry feed for the DWPF Vitrification Facility. Precipitate slurry will be generated from the ITP and periodically added to this inventory. The precipitate slurry inventory will be thoroughly blended, sampled and analyzed at SRS laboratory facilities prior to its processing at the DWPF Vitrification Facility in sub-batches.

The expected characterization for the washed precipitate slurry is provided in Table 5-12. Additional samples will be collected and analyzed after start-up of the ITP process to confirm these predicted values. It is estimated that the wash precipitate slurry accounts for approximately 3% of the total effluent/by-product waste volume.

5.2.4 Decontaminated Salt Solution

The decontaminated salt solution is the filtrate generated by processing the salt cake through the ITP process. This filtrate may contain low concentrations of radionuclides and/or process chemicals which precludes its discharge to the environment. The decontaminated salt solution will be combined with the F/H ETF treatment reject stream (called

TABLE 5-12

WASHED PRECIPITATE SLURRY
TYPICAL WASTE CHARACTERIZATION

Component/ Parameter	Typical Concentration Range[a]
Water (wt. %)	75 - 99
Solubles[b] (wt. %)	1 - 10
Insolubles[c] (wt. %)	0 - 15
pH (standard units)	12 - 14
Total Carbon (mg/l)	n/a
Radionuclides (Ci/gal)	25 - 95

Notes:

[a] Values are predicted from material balances compiled from laboratory and bench scale testing.

[b] The soluble components are primarily sodium salts with hydroxide, nitrite, and nitrate anions. These three anionic compounds account for more than 95% of the soluble components present in the waste stream.

[c] The insoluble components are primarily tetraphenylborate salts of potassium and cesium, and insoluble sodium titanate. Diphenyl, mercury and a trace amount of tank sludge may also be present in the insoluble fraction.

waste concentrate) in Tank 50. The combined waste stream is transferred to Z-Area SMDF for solidification and on-site disposal.

Table 5-13 provides the expected waste characteristics for the decontaminated salt solution. Additional samples will be collected and analyzed after start-up of the ITP process to confirm these predicted values. It is estimated that the decontaminated salt solution accounts for approximately 47% of the total effluent/by-product waste volume.

5.2.5 Washed Sludge Slurry

The washed sludge slurry is generated by the processing of the insoluble solids which have accumulated within the waste tanks. The tank sludge is washed with inhibited well water (water containing a small amount of sodium hydroxide to inhibit corrosion) to reduce the amount of soluble salts contained in the sludge. The tank sludge may also be washed with concentrated sodium hydroxide, heated, and hydraulically mixed to remove some of the aluminum solids. After settling, the washed sludge slurry will be transferred to the DWPF Vitrification Facility for additional processing. Section 4.6 presents a detailed description of the sludge processing.

Macro-batches (up to 1 million gallons each) of F and H-Area sludge will be prepared in the H-Area Tank Farm to provide the slurry feed for the DWPF Vitrification Facility. The sludge slurry will be sampled at the Tank Farm and analyzed to determine the composition of the

TABLE 5-13

DECONTAMINATED SALT SOLUTION
TYPICAL WASTE CHARACTERIZATION

Component/ Parameter	Typical Concentration Range[a]
Water (wt. %)	64 - 95
Solubles[b] (wt. %)	5 - 35
Insolubles[c] (wt. %)	0 - 1
pH (standard units)	12 - 14
Total Carbon (mg/l)	n/a
Radionuclides (Ci/gal)	2.0E-4 - 2.1E-3

Notes:

[a] Values are predicted from material balances compiled from laboratory and bench scale testing.

[b] The soluble components are primarily sodium salts with hydroxide, nitrite, and nitrate anions. These three anionic compounds account for more than 95% of the soluble components present in the waste stream.

[c] The insoluble components are primarily tetraphenylborate salts of potassium and cesium, and insoluble sodium titanate. Diphenyl, mercury and a trace amount of tank sludge may also be present in the insoluble fraction.

macro-batch prior to its processing at the DWPF Vitrification Facility in sub-batches.

The predicted composition of the washed sludge slurry is provided in Table 5-14. Additional samples will be collected and analyzed during the processing to confirm these predicted values. It is estimated that the washed sludge slurry accounts for approximately 3% of the total effluent/by-product waste volume.

TABLE 5-14

WASHED SLUDGE SLURRY
TYPICAL WASTE CHARACTERIZATION

Component/ Parameter	Typical Concentration Range[a]
Water (wt. %)	70 - 99
Solubles[b] (wt. %)	1 - 10
Insolubles[c] (wt. %)	0 - 20
pH (standard units)	12 - 14
Total Carbon (mg/l)	n/a
Radionuclides (Ci/gal)	90 - 175

Notes:

[a] Values are predicted from material balances compiled from laboratory and bench scale testing.

[b] The soluble components are primarily sodium salts with hydroxide, nitrite, and nitrate anions. These three anionic compounds account for more than 95% of the soluble components present in the waste stream.

[c] The insoluble components are a complex mixture of hydrated metal oxides that are formed when the waste is neutralized with sodium hydroxide to allow storage within the F and H-Area waste tanks. The principal compounds present are hydrated oxides of iron, aluminum, manganese, nickel, uranium, thorium, and mercury. Trace quantities of spent process chemicals and fission products are also present in the tank sludge.

6.0 CALCULATIONS

6.1 Transfer Pump Calculations

A majority of the transfer pumps can be used for a variety of different waste transfers and have been in service for many years. These transfers involve different types of wastes (i.e., fresh waste, aged waste, salt solution, and sludge slurry) and different locations. Each waste type has different physical characteristics which affect the transfer rates. The transfer route also has its own characteristics (i.e., pipe diameter/schedule/material, transfer length, and change in elevation). The combination of these variables determines the transfer rates. The design of the transfer system allows a large number of possible transfer routes. Therefore, to determine the transfer rate for each possible transfer, a very large number of calculations would be required.

As previously discussed, most waste transfers are independent of the treatment/process operations and are normally conducted in batches. Should waste tank or treatment capacity become unavailable, production operations can be ceased to stop the flow of influent wastes. Administrative procedures and instruments are used to prevent overfilling a waste tank. Secondary containment with sumps and transfer pumps is provided for all waste handling equipment/structures in the event of a spill. Because of these reasons, pump calculations are not provided. Instead, pump curves for the typical Tank Farm transfer pumps have been compiled and included in Appendix A.

Other transfer pumps are dedicated to a particular service (i.e., waste type and transfer routes). For these transfer pumps, the minimum required pump specifications are provided in Section 7.6.1. These transfer pumps include:

- The evaporator CRC pumps,

- The evaporator overheads hold tank pumps,
- The CTS pumps,
- The ITP stripper column pumps, and
- The ITP hold tank pumps.

Pump curves for these pumps are also included in Appendix A.

6.2 Waste Tank Capacity Calculations

Capacity calculations for the primary waste tanks (Type I, II, III/IIIA and IV) are provided in Appendix B.

7.0 SPECIFICATION SUMMARIES

The following sections contain a summary of the specifications for process equipment and the waste tanks contained within the F and H-Area HLW Tank Farms.

7.1 Evaporator Systems
7.2 In-Tank Precipitation
7.3 Sludge Processing
7.4 Waste Tanks
7.5 Process Piping
7.6 Waste Transfer Pumps
7.7 Pump Pit Pump Tanks

7.1 Evaporator Systems

The specifications for the existing and replacement evaporator systems are summarized in Sections 7.1.1 and 7.1.2, respectively.

7.1.1 Existing Evaporator Systems

The four existing evaporator systems (242-F, 242-H, 242-16F, and 242-16H) consist of an evaporator, overhead condenser, mercury removal tank, pump tank, cesium removal column, and hold tanks. Evaporator systems 242-F and 242-H also have a waste concentrate transfer system. Tables 7-1 to 7-28 contain specifications for the above mentioned pieces of process equipment for each existing evaporator system. Some of the process equipment is replaced approximately every ten years. The equipment is replaced with equivalent equipment. The specifications provided in this section is for the equipment currently installed in the existing evaporator systems. Additional details are provided below.

Material and Testing

The existing evaporators and related waste processing equipment (i.e., condenser, mercury removal tank, pump tank, cesium removal column, hold tanks, and waste concentrate transfer system) are fabricated from 304L stainless steel material which conforms to the following Standards:

Description	Standard
Plates, sheets, strips	ASTM A240
Forgings	ASTM A182
Bar stock	ASTM A276
Castings	ASTM A351/A744
Bar welding rods/electrodes	AWS A5.9
Covered welding electrodes	AWS A5.4

The corrosion potential for the material was evaluated by various tests in accordance with National Standards. Coupons of the material (identified by lot number) were subjected to a electrolytic oxalic acid etching test (ASTM A262), and a boiling nitric acid test (ASTM A262). The material was inspected for pitting following these tests. Upon satisfaction of the ASTM requirements, a test report was issued by the supplier and the material was approved for use.

TABLE 7-1

EVAPORATOR POT SPECIFICATIONS
(242-F Evaporator System)

DESCRIPTION	SPECIFICATION
Year Installed	1977
Evaporator Pot	
Approximate Dimensions (diameter, height)	8' D X 16' 5½" H
Capacity, Designed Liquid Level (working)	1800 GALLONS
Capacity, Overheads Flow Rate (average)	6 GPM
Shell Thickness	3/8 INCH
Material of Construction	304L STAINLESS STEEL
Design Temperature	320 °F
Design Pressure	15 PSIG
Heater Tube Bundle	
Dimension (diameter, length)	0.75" O.D. X 7.5' L
Number of Tubes (maximum)	233 BENT TUBES
Material of Construction	14 GAUGE, 304L STAINLESS STEEL
De-entrainment Bubble Cap Trays	
Dimensions (diameter, height)	4' D X 3' H
Number of Trays	3
Bubble Caps per Tray	20 NO. 58 MODIFIED GLITCH
Material of Construction	304L STAINLESS STEEL
Demister	
Dimensions (diameter, height)	25" D x 8" H
Material of Construction	304L STAINLESS STEEL

TABLE 7-2

OVERHEADS CONDENSER SPECIFICATIONS
(242-F Evaporator System)

DESCRIPTION	SPECIFICATIONS
Year Installed	1982-1985
Type of Condenser	HORIZONTAL, FIXED TUBESHEET, DOUBLE-PASS HEAT EXCHANGER-WASTE FLOWS IN TUBES
Tubes	
Dimensions (diameter, length)	1" O.D. X 8' L
Number of Tubes (maximum)	4 (85 FIRST PASS, 39 SECOND PASS)
Material of Construction	04L STAINLESS STEEL, 14 GAUGE

TABLE 7-3

MERCURY REMOVAL TANK SPECIFICATIONS
(242-F Evaporator System)

DESCRIPTION	SPECIFICATIONS
Year Installed	1983
Dimensions (diameter, height)	3' O.D. X 3' H
Capacity (nominal)	100 GALLONS
Shell Thickness	3/16 INCHES
Material of Construction	304L STAINLESS STEEL
Design Temperature	200 °F
Design Pressure	15 PSIG
Design Standard	ASME BOILER AND PRESSURE VESSEL CODE, SECTION VIII DIVISION 1

TABLE 7-4

CRC PUMP TANK SPECIFICATIONS
(242-F Evaporator System Pump House)

DESCRIPTION	SPECIFICATION
Year Installed	1984
Tank	
Dimensions (diameter, height)	24" O.D. X 36" H
Capacity (nominal)	80 GALLONS
Shell Thickness	3/16 INCHES
Material of Construction	304L STAINLESS STEEL
Design Temperature	135 ° F
Design Pressure	ATM
Design Standard	ASME BOILER AND PRESSURE VESSEL CODE, SECTION VIII, DIVISION 1

CRC HOLD TANK
(242-F Evaporator System Pump House)

DESCRIPTION	SPECIFICATION
Year Installed	1984
Tank	
Dimensions (diameter, height)	24" O.D. X 36" H
Capacity (nominal)	80 GALLONS
Shell Thickness	3/16 INCHES
Material of Construction	304L STAINLESS STEEL
Design Temperature	135 ° F
Design Pressure	ATM
Design Standards	ASME BOILER AND PRESSURE VESSEL CODE SECTION VIII, DIVISION 1

TABLE 7-5

CESIUM REMOVAL COLUMN SPECIFICATIONS
(242-F Evaporator System)

DESCRIPTION	SPECIFICATIONS
Year Installed	1984-1987
Dimensions (diameter, height)	1'-10" D x 7'-9½" H
Ion-Exchange Resin Capacity	10 CUBIC FEET
Shell Thickness	3/16 INCHES
Material of Construction	304L STAINLESS STEEL
Design Temperature	300°F
Design Pressure	25 PSIG

TABLE 7-6

OVERHEAD HOLD TANK SPECIFICATIONS
(242-F Evaporator System)

DESCRIPTION		SPECIFICATION
Year Installed		1959
Tank		
Dimensions (diameter, height)		6' D X 6' H
Approximate Capacity (nominal)		1020 GALLONS
Shell Thickness	Wall:	1/4 INCH
	Top:	5/16 INCH
	Bottom:	3/8 INCH
Material of Construction		304L STAINLESS STEEL
Fabrication Standard		ASME BOILER AND PRESSURE VESSEL CODE, SECTION VIII DIVISION 1
Design Temperature		200 °F
Design Pressure		0 PSIG

TABLE 7-7

CTS PUMP TANK SPECIFICATIONS
(242-F Evaporator System)

DESCRIPTION		SPECIFICATION
Year Installed		1990
Primary Tank Shell		
Dimensions (diameter, fill height)		8'D x 8'H
Capacity (nominal)		2950 GALLONS
Shell Thickness	Wall:	3/8 INCH
	Top:	3/8 INCH
	Bottom:	3/8 INCH
Material of Construction		304L STAINLESS STEEL
Design Temperature		300°F
Design Pressure		ATMOSPHERIC
Containment Tank Shell		
Dimensions (diameter, fill height)		8'-4'D x 8'-4'H
Capacity (nominal)		3011 GALLONS
Shell Thickness	Wall:	3/8 INCH
	Top:	3/8 INCH
	Bottom:	3/8 INCH
Material of Construction		304L STAINLESS STEEL
Design Temperature		300°F
Design Pressure		ATMOSPHERIC
Heating/Cooling Coil		
Design Pressure		225 PSIG
Material of Construction		304L STAINLESS STEEL
Design Temperature		300°F

TABLE 7-8

EVAPORATOR POT SPECIFICATIONS
(242-H Evaporator System)

DESCRIPTION	SPECIFICATION
Year Installed	1980 (rebuilt unit)
Evaporator Pot	
Approximate Dimensions (diameter, height)	8' D X 14' 9½" H
Capacity, Designed Liquid Level (working)	1800 GALLONS
Capacity, Overheads Flow Rate (average)	6 GPM
Shell Thickness	3/8 INCH
Material of Construction	304L STAINLESS STEEL
Design Temperature	270 ° F
Design Pressure	15 PSIG
Heater Tube Bundle	
Dimension (diameter, length)	3/4"ϕ, 6' 9-1/2" L
Number of Tubes (maximum)	233
Material of Construction	304L STAINLESS STEEL
De-entrainment Bubble Cap Trays	
Dimensions (diameter, height)	4'D, 2'9" L, 9'-5/8"H
Number of Trays	2
Bubble Caps per Tray	10
Material of Construction	304L STAINLESS STEEL
Demister	NONE INSTALLED

TABLE 7-9

OVERHEADS CONDENSER SPECIFICATIONS
(242-H Evaporator System)

DESCRIPTION	SPECIFICATIONS
Year Installed	1989
Type of Condenser	HORIZONTAL, FIXED TUBESHEET, DOUBLE-PASS HEAT EXCHANGER-WASTE FLOWS IN TUBES
Tubes	
Dimensions (diameter, length)	1" O.D. X 8' L
Number of Tubes (maximum)	124 (85 FIRST PASS, 39 SECOND PASS)
Material of Construction	304L STAINLESS STEEL, 14 GAUGE

TABLE 7-10

MERCURY REMOVAL TANK SPECIFICATIONS
(242-H Evaporator System)

DESCRIPTION	SPECIFICATIONS
Year Installed	1983
Dimensions (diameter, height)	3' O.D. X 3' H
Capacity (nominal)	164 GALLONS
Shell Thickness	3/16 INCHES
Material of Construction	304L STAINLESS STEEL
Design Temperature	200 ° F
Design Pressure	15 PSIG
Design Standard	ASME BOILER AND PRESSURE VESSEL CODE, SECTION VIII DIVISION 1

TABLE 7-11

CRC PUMP TANK SPECIFICATIONS
(242-H Evaporator System)

DESCRIPTION	SPECIFICATION
Year Installed	1983
Tank	
Dimensions (diameter, height)	18" O.D. X 30" H
Capacity (nominal)	35 GALLONS
Shell Thickness	3/16 INCHES
Material of Construction	304L STAINLESS STEEL
Design Temperature	200 °F
Design Pressure	15 PSIG
Design Standard	ASME BOILER AND PRESSURE VESSEL CODE, SECTION VIII DIVISION 1

TABLE 7-12

CESIUM REMOVAL COLUMN SPECIFICATIONS
(242-H Evaporator System)

DESCRIPTION	SPECIFICATIONS
Year Installed	1990
Dimensions (diameter, height)	2'-7" D x 8'-4½"
Ion-Exchange Resin Capacity	20 CUBIC FEET
Shell Thickness	3/6 INCH
Material of Construction	304L STAINLESS STEEL
Design Temperature	300°F
Design Pressure	25 PSIG

TABLE 7-13

OVERHEAD HOLD TANK SPECIFICATIONS
(242-H Evaporator System)

DESCRIPTION		SPECIFICATION
Year Installed		1960
Tank		
Dimensions (diameter, height)		6' D X 6' H
Approximate Capacity (nominal)		1505 GALLONS
Shell Thickness	Wall:	1/4 INCH
	Top:	5/16 INCH
	Bottom:	3/8 INCH
Material of Construction		304L STAINLESS STEEL
Fabrication Standard		ASME BOILER AND PRESSURE VESSEL CODE, SECTION VIII DIVISION 1
Design Temperature		200 ° F
Design Pressure		0 PSIG

TABLE 7-14

CTS PUMP TANK SPECIFICATIONS
(242-H Evaporator System)

DESCRIPTION		SPECIFICATION
Year Installed		1990
Primary Tank Shell		
Dimensions (diameter, fill height)		8' D X 8' H
Capacity (nominal)		2950 GALLONS
Shell Thickness	Wall:	3/8 INCH
	Top:	3/8 INCH
	Bottom:	3/8 INCH
Material of Construction		304L STAINLESS STEEL
Design Temperature		300°F
Design Pressure		ATMOSPHERIC
Containment Tank Shell		
Dimensions (diameter, fill height)		8'-4" D x 8'-4" H
Capacity (nominal)		3011 GALLONS
Shell Thickness	Wall:	3/8 INCH
	Top:	3/8 INCH
	Bottom:	3/8 INCH
Material of Construction		304L STAINLESS STEEL
Design Temperature		300°F
Design Pressure		ATMOSPHERIC
Heating/Cooling Coil		
Design Pressure		225 PSIG
Material of Construction		304L STAINLESS STEEL
Design Temperature		300°F

TABLE 7-15

EVAPORATOR POT SPECIFICATIONS
(242-16F Evaporator System)

DESCRIPTION	SPECIFICATION
Year Installed	1989
Evaporator Pot	
Approximate Dimensions (diameter, height)	8' D X 16' 5½" H
Capacity, Designed Liquid Level (working)	1800 GALLONS
Capacity, Overheads Flow Rate (average)	6 GPM
Shell Thickness	3/8 INCH
Material of Construction	304L STAINLESS STEEL
Design Temperature	320 °F
Design Pressure	15 PSIG
Heater Tube Bundle	
Dimension (diameter, length)	0.75" O.D. X 7.5' L
Number of Tubes (maximum)	233 BENT TUBES
Material of Construction	14 GAUGE, 304L STAINLESS STEEL
De-entrainment Bubble Cap Trays	
Dimensions (diameter, height)	4' D X 3' H
Number of Trays	3
Bubble Caps per Tray	20 NO. 58 MODIFIED GLITCH
Material of Construction	304L STAINLESS STEEL
Demister	
Dimensions (diameter, height)	25" D x 8" H
Material of Construction	304L STAINLESS STEEL

TABLE 7-16

OVERHEADS CONDENSER SPECIFICATIONS
(242-16F Evaporator System)

DESCRIPTION	SPECIFICATIONS
Year Installed	1977
Type of Condenser	FIXED TUBESHEET, SINGLE-PASS VERTICAL HEAT EXCHANGER-WASTE FLOWS IN TUBES
Tubes	
Dimensions (diameter, length)	1" O.D. X 8' L
Number of Tubes (maximum)	227
Material of Construction	304L STAINLESS STEEL, 14 GAUGE

TABLE 7-17

MERCURY REMOVAL TANK SPECIFICATIONS
(242-16F Evaporator System)

DESCRIPTION	SPECIFICATIONS
Year Installed	1977
Dimensions (diameter, height)	3' O.D. X 3' H
Capacity (nominal)	100 GALLONS
Shell Thickness	3/16 INCHES
Material of Construction	304L STAINLESS STEEL
Design Temperature	200 ° F
Design Pressure	15 PSIG
Design Standard	ASME BOILER AND PRESSURE VESSEL CODE, SECTION VIII DIVISION 1

TABLE 7-18

CRC PUMP TANK SPECIFICATIONS
(242-16F Evaporator System)

DESCRIPTION	SPECIFICATION
Year Installed	1977
Tank	
Dimensions (diameter, height)	18" O.D. X 30" H
Capacity (nominal)	35 GALLONS
Shell Thickness	3/16 INCHES
Material of Construction	304L STAINLESS STEEL
Design Temperature	200 ° F
Design Pressure	15 PSIG
Design Standard	ASME BOILER AND PRESSURE VESSEL CODE, SECTION VIII DIVISION 1

TABLE 7-19

CESIUM REMOVAL COLUMN SPECIFICATIONS
(242-16F Evaporator System)

DESCRIPTION	SPECIFICATIONS
Year Installed	1989 (Rebuilt)
Dimensions (diameter, height)	1'-10" D x 7'-9½" H
Ion-Exchange Resin Capacity	10 CUBIC FEET
Shell Thickness	3/16 INCH
Material of Construction	304L STAINLESS STEEL
Design Temperature	300°F
Design Pressure	25 PSIG

TABLE 7-20

OVERHEAD HOLD TANK SPECIFICATIONS
(242-16F Evaporator System)

DESCRIPTION		SPECIFICATION
Year Installed		1977
Tank		
Dimensions (diameter, height)		6' D X 6' H
Approximate Capacity (nominal)		1250 GALLONS
Shell Thickness	Wall:	1/4 INCH
	Top:	5/16 INCH
	Bottom:	3/8 INCH
Material of Construction		304L STAINLESS STEEL
Fabrication Standard		ASME BOILER AND PRESSURE VESSEL CODE, SECTION VIII DIVISION 1
Design Temperature		200°F
Design Pressure		0 PSIG

Westinghouse
Savannah River Company

P.O. Box 616
Aiken, SC 29802

ESH-ERG-95-0216

May 30, 1995

Ms. M. G. Vickers, Engineering Associate
Industrial and Agricultural Wastewater Division
South Carolina Department of Health
and Environmental Control
2600 Bull Street
Columbia, South Carolina 29201

Dear Ms. Vickers:

REPLACEMENT OF THE 242-16H EVAPORATOR POT (U)

Ref.: Construction Permit #17424-IW

In order to support future processing needs in the H-Area High Level Waste Tank Farm, SRS intends to replace the 242-16H Evaporator pot. The pot has not failed, however, it has reached the end of its design life. The SRS feels this replacement falls under the "normal operations" category (Section 4.2 of the referenced permit application package) and, thus does not require permit modification. Attached for your information is the specification for the replacement pot. Please replace Table 7-21 (Page 261) in your copies of the referenced construction permit application package with the attached specification.

Please contact Chuck Hayes (803/725-8838) if you have any questions or require additional information.

Yours very truly,

W. D. Dunaway, Sr. Technical Leader
Permitting Field Support Group
Environmental Protection Department

CRH:aeo
Attachment

CC:
M. F. Sadler, SCDHEC
M. C. Reece, SCDHEC, Lower Savannah District
A. B. Gould, 703-47A (2)

TABLE 7-21

EVAPORATOR POT SPECIFICATIONS
(242-16H Evaporator System)

DESCRIPTION	SPECIFICATION
Year Complete	1994
Vendor	Joseph Oat Corporation
Evaporator Pot	
Approximate Dimensions (diameter, height)	8' D, 16' 5-1/2" H
Capacity, Designed Liquid Level (working volume)	1800 GAL
Capacity, Overheads Flowrate (average, max)	10 GPM (AVE), 12 GPM (MAX) (limited by demister design)
Shell Thickness	3/8 INCH
Material of Construction	304L STAINLESS STEEL
Design Temperature	320 deg. F
Design Pressure	15 PSIG
Demister	
Dimensions (diameter, height)	36" D, 26" H
Material of Construction	304 STAINLESS STEEL
Capacity (max, flow)	6000 lb/hr (12 gpm)
Design Temperature	320 deg. F
Design Pressure	15 PSIG
Heater Tube Bundle	
Dimensions (diameter, length)	0.75" O.D., 7.5' L
Number of Tubes	233 BENT TUBES
Material of Construction	HASTELLOY G-30

TABLE 7-21

EVAPORATOR POT SPECIFICATIONS
(242-16H Evaporator System)

DESCRIPTION	SPECIFICATION
Year Installed	1984 (Rebuilt)
Evaporator Pot	
Approximate Dimensions (diameter, height)	8' D X 16' 5½" H
Capacity, Designed Liquid Level (working)	1800 GALLONS
Capacity, Overheads Flow Rate (average)	6 GPM
Shell Thickness	3/8 INCH
Material of Construction	304L STAINLESS STEEL
Design Temperature	320 °F
Design Pressure	15 PSIG
Heater Tube Bundle	
Dimension (diameter, length)	0.75" O.D. X 7.5' L
Number of Tubes (maximum)	233 BENT TUBES
Material of Construction	14 GAUGE, 304L STAINLESS STEEL
De-entrainment Bubble Cap Trays	
Dimensions (diameter, height)	4' D X 3' H
Number of Trays	3
Bubble Caps per Tray	20 NO. 58 MODIFIED GLITCH
Material of Construction	304L STAINLESS STEEL
Demister	
Dimensions (diameter, height)	25" D x 8" H
Material of Construction	304L STAINLESS STEEL

TABLE 7-22

OVERHEADS CONDENSER SPECIFICATIONS
(242-16H Evaporator System)

DESCRIPTION	SPECIFICATIONS
Year Installed	1978
Type of Condenser	FIXED TUBESHEET, SINGLE-PASS VERTICAL HEAT EXCHANGER-WASTE FLOWS IN TUBES
Tubes	
Dimensions (diameter, length)	1" O.D. X 8' L
Number of Tubes (maximum)	227
Material of Construction	304L STAINLESS STEEL, 14 GAUGE

TABLE 7-23

MERCURY REMOVAL TANK SPECIFICATIONS
(242-16H Evaporator System)

DESCRIPTION	SPECIFICATIONS
Year Installed	1978
Dimensions (diameter, height)	3' O.D. X 3' H
Capacity (nominal)	164 GALLONS
Shell Thickness	3/16 INCHES
Material of Construction	304L STAINLESS STEEL
Design Temperature	200 °F
Design Pressure	15 PSIG
Design Standard	ASME BOILER AND PRESSURE VESSEL CODE, SECTION VIII DIVISION 1

TABLE 7-24

CRC PUMP TANK SPECIFICATIONS
(242-16H Evaporator System)

DESCRIPTION	SPECIFICATION
Year Installed	1978
Tank	
Dimensions (diameter, height)	18" O.D. X 30" H
Capacity (nominal)	30 GALLONS
Shell Thickness	3/16 INCHES
Material of Construction	304L STAINLESS STEEL
Design Temperature	200 ° F
Design Pressure	15 PSIG
Design Standard	ASME BOILER AND PRESSURE VESSEL CODE, SECTION VIII DIVISION 1

TABLE 7-25

CESIUM REMOVAL COLUMN SPECIFICATIONS
(242-16H Evaporator System)

DESCRIPTION	SPECIFICATIONS
Year Installed	1989 (Rebuilt)
Dimensions (diameter, height)	1'-10" D x 7'-9½" H
Ion-Exchange Resin Capacity	10 CUBIC FEET
Shell Thickness	3/16 INCH
Material of Construction	304L STAINLESS STEEL
Design Temperature	300°F
Design Pressure	25 PSIG

TABLE 7-26

OVERHEAD HOLD TANK SPECIFICATIONS
(242-16H Evaporator System)

DESCRIPTION		SPECIFICATION
Year Installed		1978
Tank		
Dimensions (diameter, height)		6' D X 6' H
Approximate Capacity (nominal)		890 GALLONS
Shell Thickness	Wall:	1/4 INCH
	Top:	5/16 INCH
	Bottom:	3/8 INCH
Material of Construction		304L STAINLESS STEEL
Fabrication Standard		ASME BOILER AND PRESSURE VESSEL CODE, SECTION VIII DIVISION 1
Design Temperature		200 °F
Design Pressure		0 PSIG

TABLE 7-27

SPARE EVAPORATOR POT SPECIFICATIONS
(Existing Evaporator Systems)

DESCRIPTION	SPECIFICATION
Year Installed	SPARE - NOT INSTALLED[a]
Evaporator Pot	
Approximate Dimensions (diameter, height)	8' D X 16' 5-1/2" H
Capacity, Designed Liquid Level (working)	1800 GALLONS
Capacity, Overheads Flow Rate (average)	17 GPM (AVE) 21 OPM (MAX)
Shell Thickness	3/8 INCH
Material of Construction	304L STAINLESS STEEL
Design Temperature	320 °F
Design Pressure	15 PSIG
Heater Tube Bundle	
Dimension (diameter, length)	0.75" O.D. x 7.5'L
Number of Tubes (maximum)	233 BENT TUBES
Material of Construction	G-3 HASTELLOY
De-entrainment Bubble Cap Trays	NONE INSTALLED
Demister	
Dimensions (diameter, height)	25" O.D. X 8" H
Material of Construction	304L STAINLESS STEEL

NOTES:

[a] Spare evaporator pot maybe installed in any of the evaporator systems.

TABLE 7-28

EVAPORATOR POT SPECIFICATIONS
(242-25H Evaporator System)

DESCRIPTION	SPECIFICATION
Year Installed	1993[a]
Evaporator Pot	
Approximate Dimensions (diameter, height)	14' D X 26' 9-3/8" H
Capacity, Designed Liquid Level (working)	8,200 GALS (TOTAL) 3,000 GALS (OPERATING)
Capacity, Overheads Flow Rate (average)	17 GPM (AVE) 21 GPM (MAX)
Shell Thickness	1/2 INCH
Material of Construction	304L STAINLESS STEEL
Design Temperature	390 ° F
Design Pressure	15 PSIG
Heater Tube Bundle	
Bundle Dimension (width, height, length)	84" W X 18" H X 144" L
Tube Dimension (diameter, length)	3/4" D X 12' L
Number of Tubes (maximum)	594 WITH 5 ° 35' BEND
Material of Construction	14 GAUGE HASTELLOY G3 OR G30 STEEL (OR EQUIVALENT)
Design Heat Transfer Capacity (maximum)	14.3 MILLION BTU/HR
De-entrainer	N/A
Demister	
Dimensions (diameter, height)	36" D X 18" H
Material of Construction	304L STAINLESS STEEL

Notes:

[a] Expected construction completion date.

TABLE 7-29

OVERHEADS CONDENSER SPECIFICATIONS
(242-25H Evaporator System)

DESCRIPTION	SPECIFICATIONS
Year Installed	1993[a]
Type of Condenser	FIXED TUBESHEET, SINGLE-PASS VERTICAL HEAT EXCHANGER-WASTE FLOWS IN TUBES
Shell	
Dimensions (diameter, height)	3' D X 12' H
Material of Construction	CARBON STEEL
Design Temperature	390 °F
Design Pressure	15 PSIG
Tubes	
Dimensions (diameter, length)	3/4" O.D. X 12' L
Number of Tubes (maximum)	577
Material of Construction	304L STAINLESS STEEL, 14 GAUGE
Design Heat Transfer Capacity	12.9 MILLION BTU/HR

Notes:

[a] Expected construction completion date.

TABLE 7-30

MERCURY REMOVAL TANK SPECIFICATIONS
(242-25H Evaporator System)

DESCRIPTION	SPECIFICATIONS
Year Installed	1993[a]
Dimensions (diameter, height)	6' D X 2'-6" H
Capacity (nominal)	250 GALLONS
Shell Thickness	3/16 INCHES
Material of Construction	304L STAINLESS STEEL
Design Temperature	3 °F
Design Pressure	1 PSIG
Design Standard	ASME BOILER AND PRESSURE VESSEL CODE, SECTION VIII DIVISION 1

Notes:

[a] Expected construction completion date.

TABLE 7-31

OVERHEAD HOLD TANK SPECIFICATIONS
(242-25H Evaporator System)

DESCRIPTION		SPECIFICATION
Year Installed		1993[a]
Tank		
Dimensions (diameter, height)		8' D X 7'-6" H
Approximate Capacity (nominal)		2800 GALLONS
Shell Thickness	Wall:	1/4 INCH
	Dished:	1/4 INCH
	Flat:	1/4 INCH
Material of Construction		304L STAINLESS STEEL
Fabrication Standard		ASME BOILER AND PRESSURE VESSEL CODE, SECTION VIII DIVISION 1
Design Temperature		3°F
Design Pressure		1 PSIG

Notes:

[a] Expected construction completion date.

7.1.2 Replacement Evaporator System

The replacement evaporator system (242-25H) consists of an evaporator, an overhead condenser, a mercury removal tank, and two condensate hold tanks. Tables 7-28 to 7-31 contain specifications for these pieces of process equipment.

Material and Testing

The replacement evaporator and related waste processing equipment is fabricated from 304L stainless steel, carbon steel, or Hastelloy materials which conform to the following standards:

Description	Standard
304L stainless steel	
Plates, sheets, strips	ASTM A240
Bar welding rods/electrodes	ASTM SFA5.9
Covered welding electrodes	AWS SFA5.4
Forgings	ASTM A182
Hastelloy	
Plates, sheets, strips	ASTM B-582-86
Bar stock	ASTM B-581-86
Bar welding rods/electrodes	ASTM A5.14-86K
Covered welding electrodes	AWS A5.11-83
Carbon Steel	
Plates, sheets, strips, tubing	ASTM A515
Bar stock	ASTM A515

The corrosion potential for the material will be evaluated

by various tests in accordance with National Standards. Coupons of the material (identified by lot number) will be subjected to an electrolytic oxalic acid etching test (ASTM A262), and a boiling nitric acid test (ASTM A262). The material will be inspected for pitting following these tests. Upon satisfaction of the ASTM requirements, a test report will be issued by the supplier and the material will be approved for use.

7.1.3 New Spare Evaporator Pot

The new spare evaporator pot and related equipment will be constructed of materials which meet the same standards as the existing evaporators. Similar materials testing methods will be used, in accordance with National Standards. Table 7-32 provides summary specifications for this piece of equipment.

7.2 In-Tank Precipitation

The ITP process equipment consists of retrofitted Type IIIA waste tanks and a new filtration building with associated equipment. This process equipment is described below.

TABLE 7-32

NEW SPARE EVAPORATOR POT SPECIFICATIONS
(Existing Evaporator Systems)

DESCRIPTION	SPECIFICATION
Year Complete	1994
Evaporator Pot	
Approximate Dimensions (ϕ, height)	8'ϕ x 16' 5-1/2"
Capacity, Designed Liquid Level (Working)	1800 GAL
Capacity, Overheads Flowrate (Average)	17 GPM (AVE), 21 GPM (MAX)
Shell Thickness	3/8 INCH
Material of Construction	304L STAINLESS STEEL
Design Temperature	230°F
Design Pressure	15 PSIG
Demister	
Dimensions (diameter, height)	30" D, 25" H
Capacity (nominal)	304L STAINLESS STEEL
Shell Thickness	16 PSIG
Heat Tube Bundle	
Dimensions (ϕ, length)	0.75" O.D. x 7.5'L
Number of Tubes (maximum)	233 BENT TUBES
Material of Construction	HASTELLOY G-30 (Or Equivalent)

Process Waste Tanks

In general the tank retrofitting has included the addition of transfer and slurry pumps, and piping changes for the addition of process feed solutions and transfer operations. Detailed construction and testing specifications for the Type IIIA and IV tanks are contained in the general tank specifications (Section 7.4.3). Specification summary sheets for the Tanks 22, 48, and 49 are provided in Tables 7-84, 7-75, and 7-76, respectively.

Cross Flow Filters

There are two 0.5 micron 316L sintered metal cross flow filters installed in the ITP filtration building. Porous metal filters which result from the sintering process have high structural integrity and precise operating ranges for permeability and filtration. These filters are well suited for applications where high strength and corrosion resistance is required. The typical specifications for 0.5 micron sintered metal tubes are:

Standard Thickness:	0.062 inches
Minimum Ultimate Tensile Strength:	23,500 psi
Yield Strength at 2% Offset:	21,000 psi
Elongation:	3.3%
Youngs Modulus:	7.5×10^8 psi

The ITP process contains two cross-flow filters to separate the reacted precipitate from the solution. One filter may be used as a back-up for the other, or both units may operate simultaneously. Table 7-33 provides summary specifications for these units.

Stripper Columns

Two stripper columns are designed to remove benzene and alcohols from the ITP decontaminated salt solution filtrate and the wash water filtrate. Tables 7-34 and 7-35 provide a summary for the stripper column specifications.

Filtrate Hold Tanks

Two 12,000 gallon stainless steel filtrate hold tanks are installed to contain the precipitate slurry filtrate for sampling. Table 7-36 provides summary specifications for these tanks.

7.3 Sludge Processing

Sludge processing occurs in Tanks 40, 42 and 51. These tanks are Type IIIA vessels which have been retrofitted and dedicated to sludge processing. In general, the retrofitting has included the addition of transfer and slurry pumps, and piping changes for process feed solutions and transfer operations. Construction and testing specifications for the Type IIIA tanks are contained in Section 7.4.3. Tables 7-67, 7-69, and 7-77 contain summary specifications for these three tanks.

TABLE 7-33

TYPICAL CROSS FLOW FILTER SPECIFICATIONS

DESCRIPTION	SPECIFICATION
Filter Shell	
Dimensions (diameter,length)	18"D X 10'L (TUBE LENGTH)
Shell Thickness	0.062 INCHES
Material of Construction	316L STAINLESS STEEL
Filter Tubes	
Type	SINTERED METAL
Number	144 TUBES/FILTER SHELL
Diameter	0.75 INCHES
Thickness	0.062 INCHES
Pore Size	0.5 MICRON
Material of Construction	316L STAINLESS STEEL
Performance	
Flow Capacity	
Precipitate Slurry in (maximum)	500 GPM[a]
Filtrate out (maximum)	115 GPM[b]
	33 GPM[c]
Precipitate Return (minimum)	100 GPM
Differential Pressure Across Filter Tubes (maximum)	60 PSI @ 50 GPM FILTRATE

Notes:

[a] Based upon capacity of the filter feed pump.

[b] Based upon capacity of the stripper column - decontaminated salt solution filtrate (see Table 7-34)

[c] Based upon capacity of the stripper column - wash water filtrate (see Table 7-35)

TABLE 7-34

STRIPPER COLUMN SPECIFICATIONS -
DECONTAMINATED SALT SOLUTION FILTRATE

DESCRIPTION	SPECIFICATION
Dimensions (diameter, height)	30" D X 36' H
Material of Construction	304L STAINLESS STEEL
Packing Material	20' 316 STAINLESS STEEL STRUCTURED PACKING (KOCH FLEXIPAC, TYPE I, OR EQUIVALENT)
Stripping Medium	NITROGEN
Stripping Rate	440 SCFM
Flow Capacity (maximum)	115 GPM

TABLE 7-35

STRIPPER COLUMN SPECIFICATIONS -
WASH WATER FILTRATE

DESCRIPTION	SPECIFICATION
Dimensions (diameter, height)	16" D X 36' H
Material of Construction	304L STAINLESS STEEL
Packing Material	20' 316 STAINLESS STEEL STRUCTURED PACKING (KOCH FLEXPAC TYPE I, OR EQUIVALENT)
Stripping medium	NITROGEN
Stripping Rate	220 SCFM
Flow Capacity	33 GPM

TABLE 7-36

IN-TANK PRECIPITATION
FILTRATE HOLD TANKS

DESCRIPTION		SPECIFICATION
Dimensions (diameter, height)		12' O.D. X 17' H
Capacity (nominal)		14,400 GALLONS
Capacity (working)		12,000 GALLONS
Shell Thickness	Wall:	1/4 INCH
	Top:	1/4 INCH
	Bottom:	1/4 INCH
Material of Construction		304L STAINLESS STEEL
Design Pressure		2 PSIG
Design Temperature		140 °F

7.4 Waste Tanks

7.4.1 Type I Waste Tanks

The following section describes the structural design testing and construction, cooling system, ventilation system, and instrumentation for Type I waste tanks (Tanks 1 to 12). The Type I waste tank design is shown as Figure 7-1. The specifications for Tanks 1 to 12 are summarized in Tables 7-37 to 7-48, respectively.

<u>Structural Design</u>

In general, Type I tanks have a closed top cylindrical primary tank shell which is erected within a reinforced concrete vault. The primary tank shell is 75 feet in diameter, 24-1/2 feet in height, and has a capacity of 750,000 gallons. The primary tank shell (wall, top and bottom) is constructed from 1/2 inch thick carbon steel (ASTM A285-50T Grade B, firebox quality). The cylindrical walls are joined to the flat-steel top and bottom base plates by a curved knuckle plate which is also 1/2 inch thick.

The primary tank shell is set within a carbon steel circular "pan" which is 5 feet deep and has a diameter 5 feet larger than the primary tank. The pan provides secondary containment should the primary tank shell leak.

A reinforced concrete vault surrounds the tank system and provides structural support and radiation shielding for the tanks. Twelve columns are located inside the tank and support the concrete tank roof. Each column is comprised of a 2 foot diameter 1/2 inch thick seamless carbon steel pipe pipe (ASTM A53 Grades A or B) with flared capitals. The carbon steel pipes are filled with concrete and are supported on the bottom of the primary tank shell. The pipe is also welded to the top and bottom of the primary tank shell. Both the concrete wall and roof are 22 inches thick. The concrete floor slab is 30 inches thick. The entire tank system is covered with approximately nine feet of soil for radiation shielding.

Transfer lines enter or exit the tank through the tanks shell near the tank top (approximately one foot above the nominal fill line) or a riser in the concrete roof.

TABLE 7-37

TANK 1 (TYPE I)

DESCRIPTION	SPECIFICATION
Primary Tank Shell	
Dimensions (diameter, height)	75' D X 24.5' H
Fill Height (maximum)	276 INCHES
Capacity (nominal)	750,000 GALLONS
Shell Thickness	
Wall:	1/2 INCH
Top:	1/2 INCH
Bottom:	1/2 INCH
Material of Construction	CARBON STEEL, ASTM A285-50T, GRADE B (FIREBOX QUALITY)
Fabrication Standard	1949 ASME BOILER CODE FOR UNFIRED PRESSURE VESSELS, SECTION VIII
Design Temperature (maximum)	220 ° F
Design Pressure (maximum specific gravity @ full waste capacity)	1.4 PSI
Secondary Containment (Steel Pan)	
Dimensions (diameter, height)	80' D X 5' H
Capacity (maximum)	185,000 GALLONS
Shell Thickness	
Wall:	1/2 INCH
Top:	1/2 INCH
Bottom:	1/2 INCH
Material of Construction	CARBON STEEL, ASTM A285-50T, GRADE B (FIREBOX QUALITY)
Cooling Coils	DISTRIBUTED (PERMANENT)
Designed Heat Transfer Capacity	UP TO 6,000,000 BTU/HR
Testing Pressure	300 PSIG
Material of Construction	CARBON STEEL, 2-INCH DIAMETER, SCHEDULE 40 SEAMLESS PIPE, ASTM A-106 OR A-53 GRADE A
Ventilation	
Primary Tank	150 CFM
Annulus[a]	CFM
Pump Installations	
Slurry Pumps	3-4 ADDED AS REQUIRED FOR WASTE TRANSFER
Jet Pumps	1

Notes:

[a] Annulus ventilation system is equipped with a HEPA filter.

TABLE 7-38

TANK 2 (TYPE I)

DESCRIPTION	SPECIFICATION
Primary Tank Shell	
Dimensions (diameter, height)	75' D X 24.5' H
Fill Height (maximum)	276 INCHES
Capacity (nominal)	750,000 GALLONS
Shell Thickness	
Wall:	1/2 INCH
Top:	1/2 INCH
Bottom:	1/2 INCH
Material of Construction	CARBON STEEL, ASTM A285-50T, GRADE B (FIREBOX QUALITY)
Fabrication Standard	1949 ASME BOILER CODE FOR UNFIRED PRESSURE VESSELS, SECTION VIII
Design Temperature (maximum)	220 °F
Design Pressure (maximum specific gravity @ full waste capacity)	1.4 PSI
Secondary Containment (Steel Pan)	
Dimensions (diameter, height)	80' D X 5' H
Capacity (maximum)	185,000 GALLONS
Shell Thickness	
Wall:	1/2 INCH
Top:	1/2 INCH
Bottom:	1/2 INCH
Material of Construction	CARBON STEEL, ASTM A285-50T, GRADE B (FIREBOX QUALITY)
Cooling Coils	DISTRIBUTED (PERMANENT)
Designed Heat Transfer Capacity	UP TO 6,000,000 BTU/HR
Testing Pressure	300 PSIG
Material of Construction	CARBON STEEL, 2-INCH DIAMETER, SCHEDULE 40 SEAMLESS PIPE, ASTM A-106 OR A-53 GRADE A
Ventilation	
Primary Tank	150 CFM
Annulus[a]	CFM
Pump Installations	
Slurry Pumps	3-4 ADDED AS REQUIRED FOR WASTE TRANSFER
Jet Pumps	1

Notes:

[a] Annulus ventilation system is equipped with a HEPA filter.

TABLE 7-39

TANK 3 (TYPE I)

DESCRIPTION	SPECIFICATION
Primary Tank Shell	
Dimensions (diameter, height)	75' D X 24.5' H
Fill Height (maximum)	274 INCHES
Capacity (nominal)	750,000 GALLONS
Shell Thickness	
Wall:	1/2 INCH
Top:	1/2 INCH
Bottom:	1/2 INCH
Material of Construction	CARBON STEEL, ASTM A285-50T, GRADE B (FIREBOX QUALITY)
Fabrication Standard	1949 ASME BOILER CODE FOR UNFIRED PRESSURE VESSELS, SECTION VIII
Design Temperature (maximum)	220 °F
Design Pressure (maximum specific gravity @ full waste capacity)	1.4 PSI
Secondary Containment (Steel Pan)	
Dimensions (diameter, height)	80' D X 5' H
Capacity (maximum)	185,000 GALLONS
Shell Thickness	
Wall:	1/2 INCH
Top:	1/2 INCH
Bottom:	1/2 INCH
Material of Construction	CARBON STEEL, ASTM A285-50T, GRADE B (FIREBOX QUALITY)
Cooling Coils	DISTRIBUTED (PERMANENT)
Designed Heat Transfer Capacity	UP TO 6,000,000 BTU/HR
Testing Pressure	300 PSIG
Material of Construction	CARBON STEEL, 2-INCH DIAMETER, SCHEDULE 40 SEAMLESS PIPE, ASTM A-106 OR A-53 GRADE A
Ventilation	
Primary Tank	150 CFM
Annulus[a]	CFM
Pump Installations	
Slurry Pumps	3-4 ADDED AS REQUIRED FOR WASTE TRANSFER
Jet pumps	1

Notes:

[a] Annulus ventilation system is equipped with a HEPA filter.

TABLE 7-40

TANK 4 (TYPE I)

DESCRIPTION	SPECIFICATION
Primary Tank Shell	
Dimensions (diameter, height)	75' D X 24.5' H
Fill Height (maximum)	273 INCHES
Capacity (nominal)	750,000 GALLONS
Shell Thickness	
Wall:	1/2 INCH
Top:	1/2 INCH
Bottom:	1/2 INCH
Material of Construction	CARBON STEEL, ASTM A285-50T, GRADE B (FIREBOX QUALITY)
Fabrication Standard	1949 ASME BOILER CODE FOR UNFIRED PRESSURE VESSELS, SECTION VIII
Design Temperature (maximum)	220 °F
Design Pressure (maximum specific gravity @ full waste capacity)	1.4 PSI
Secondary Containment (Steel Pan)	
Dimensions (diameter, height)	80' D X 5' H
Capacity (maximum)	185,000 GALLONS
Shell Thickness	
Wall:	1/2 INCH
Top:	1/2 INCH
Bottom:	1/2 INCH
Material of Construction	CARBON STEEL, ASTM A285-50T, GRADE B (FIREBOX QUALITY)
Cooling Coils	DISTRIBUTED (PERMANENT)
Designed Heat Transfer Capacity	UP TO 6,000,000 BTU/HR
Testing Pressure	300 PSIG
Material of Construction	CARBON STEEL, 2-INCH DIAMETER, SCHEDULE 40 SEAMLESS PIPE, ASTM A-106 OR A-53 GRADE A
Ventilation	
Primary Tank	150 CFM
Annulus[a]	CFM
Pump Installations	
Slurry Pumps	3-4 ADDED AS REQUIRED FOR WASTE TRANSFER
Jet pumps	1

Notes:

[a] Annulus ventilation system is equipped with a HEPA filter.

TABLE 7-41

TANK 5 (TYPE I)

DESCRIPTION	SPECIFICATION
Primary Tank Shell	
Dimensions (diameter, height)	75' D X 24.5' H
Fill Height (maximum)	274 INCHES
Capacity (nominal)	750,000 GALLONS
Shell Thickness	
Wall:	1/2 INCH
Top:	1/2 INCH
Bottom:	1/2 INCH
Material of Construction	CARBON STEEL, ASTM A285-50T, GRADE B (FIREBOX QUALITY)
Fabrication Standard	1949 ASME BOILER CODE FOR UNFIRED PRESSURE VESSELS, SECTION VIII
Design Temperature (maximum)	220 ° F
Design Pressure (maximum specific gravity @ full waste capacity)	1.4 PSI
Secondary Containment (Steel Pan)	
Dimensions (diameter, height)	80' D X 5' H
Capacity (maximum)	185,000 GALLONS
Shell Thickness	
Wall:	1/2 INCH
Top:	1/2 INCH
Bottom:	1/2 INCH
Material of Construction	CARBON STEEL, ASTM A285-50T, GRADE B (FIREBOX QUALITY)
Cooling Coils	DISTRIBUTED (PERMANENT)
Designed Heat Transfer Capacity	UP TO 6,000,000 BTU/HR
Testing Pressure	300 PSIG
Material of Construction	CARBON STEEL, 2-INCH DIAMETER, SCHEDULE 40 SEAMLESS PIPE, ASTM A-106 OR A-53 GRADE A
Ventilation	
Primary Tank	150 CFM
Annulus[a]	CFM
Pump Installations	
Slurry Pumps	3-4 ADDED AS REQUIRED FOR WASTE TRANSFER
Jet pumps	1

Notes:

[a] Annulus ventilation system is equipped with a HEPA filter.

TABLE 7-42

TANK 6 (TYPE I)

DESCRIPTION	SPECIFICATION
Primary Tank Shell	
Dimensions (diameter, height)	75' D X 24.5' H
Fill Height (maximum)	275 INCHES
Capacity (nominal)	750,000 GALLONS
Shell Thickness	
Wall:	1/2 INCH
Top:	1/2 INCH
Bottom:	1/2 INCH
Material of Construction	CARBON STEEL, ASTM A285-50T, GRADE B (FIREBOX QUALITY)
Fabrication Standard	1949 ASME BOILER CODE FOR UNFIRED PRESSURE VESSELS, SECTION VIII
Design Temperature (maximum)	220 °F
Design Pressure (maximum specific gravity @ full waste capacity)	1.4 PSI
Secondary Containment (Steel Pan)	
Dimensions (diameter, height)	80' D X 5' H
Capacity (maximum)	185,000 GALLONS
Shell Thickness	
Wall:	1/2 INCH
Top:	1/2 INCH
Bottom:	1/2 INCH
Material of Construction	CARBON STEEL, ASTM A285-50T, GRADE B (FIREBOX QUALITY)
Cooling Coils	DISTRIBUTED (PERMANENT)
Designed Heat Transfer Capacity	UP TO 6,000,000 BTU/HR
Testing Pressure	300 PSIG
Material of Construction	CARBON STEEL, 2-INCH DIAMETER, SCHEDULE 40 SEAMLESS PIPE, ASTM A-106 OR A-53 GRADE A
Ventilation	
Primary Tank	150CFM
Annulus[a]	CFM
Pump Installations	
Slurry Pumps	3-4 ADDED AS REQUIRED FOR WASTE TRANSFER
Jet pumps	1

Notes:

[a] Annulus ventilation system is equipped with a HEPA filter.

TABLE 7-43

TANK 7 (TYPE I)

DESCRIPTION	SPECIFICATION
Primary Tank Shell	
Dimensions (diameter, height)	75' D X 24.5' H
Fill Height (maximum)	275 INCHES
Capacity (nominal)	750,000 GALLONS
Shell Thickness	
Wall:	1/2 INCH
Top:	1/2 INCH
Bottom:	1/2 INCH
Material of Construction	CARBON STEEL, ASTM A285-50T, GRADE B (FIREBOX QUALITY)
Fabrication Standard	1949 ASME BOILER CODE FOR UNFIRED PRESSURE VESSELS, SECTION VIII
Design Temperature (maximum)	220°F
Design Pressure (maximum specific gravity @ full waste capacity)	1.4 PSI
Secondary Containment (Steel Pan)	
Dimensions (diameter, height)	80' D X 5' H
Capacity (maximum)	185,000 GALLONS
Shell Thickness	
Wall:	1/2 INCH
Top:	1/2 INCH
Bottom:	1/2 INCH
Material of Construction	CARBON STEEL, ASTM A285-50T, GRADE B (FIREBOX QUALITY)
Cooling Coils	DISTRIBUTED (PERMANENT)
Designed Heat Transfer Capacity	UP TO 6,000,000 BTU/HR
Testing Pressure	300 PSIG
Material of Construction	CARBON STEEL, 2-INCH DIAMETER, SCHEDULE 40 SEAMLESS PIPE, ASTM A-106 OR A-53 GRADE A
Ventilation	
Primary Tank	150 CFM
Annulus[a]	CFM
Pump Installations	
Slurry Pumps	3-4 ADDED AS REQUIRED FOR WASTE TRANSFER
Transfer Pumps	1
Jet pumps	1

Notes:

[a] Annulus ventilation system is equipped with a HEPA filter.

TABLE 7-44

TANK 8 (TYPE I)

DESCRIPTION	SPECIFICATION
Primary Tank Shell	
Dimensions (diameter, height)	75' D X 24.5' H
Fill Height (maximum)	271 INCHES
Capacity (nominal)	750,000 GALLONS
Shell Thickness	
Wall:	1/2 INCH
Top:	1/2 INCH
Bottom:	1/2 INCH
Material of Construction	CARBON STEEL, ASTM A285-50T, GRADE B (FIREBOX QUALITY)
Fabrication Standard	1949 ASME BOILER CODE FOR UNFIRED PRESSURE VESSELS, SECTION VIII
Design Temperature (maximum)	220 °F
Design Pressure (maximum specific gravity @ full waste capacity)	1.4 PSI
Secondary Containment (Steel Pan)	
Dimensions (diameter, height)	80' D X 5' H
Capacity (maximum)	185,000 GALLONS
Shell Thickness	
Wall:	1/2 INCH
Top:	1/2 INCH
Bottom:	1/2 INCH
Material of Construction	CARBON STEEL, ASTM A285-50T, GRADE B (FIREBOX QUALITY)
Cooling Coils	DISTRIBUTED (PERMANENT)
Designed Heat Transfer Capacity	UP TO 6,000,000 BTU/HR
Testing Pressure	300 PSIG
Material of Construction	CARBON STEEL, 2-INCH DIAMETER, SCHEDULE 40 SEAMLESS PIPE, ASTM A-106
OR A-53 GRADE A	
Ventilation	
Primary Tank	150 CFM
Annulus[a]	CFM
Pump Installations	
Slurry Pumps	3-4 ADDED AS REQUIRED FOR WASTE TRANSFER
Jet pumps	1

Notes:

[a] Annulus ventilation system is equipped with a HEPA filter.

TABLE 7-45

TANK 9 (TYPE I)

DESCRIPTION	SPECIFICATION
Primary Tank Shell	
Dimensions (diameter, height)	75' D X 24.5' H
Fill Height (maximum)	273 INCHES
Capacity (nominal)	750,000 GALLONS
Shell Thickness	
Wall:	1/2 INCH
Top:	1/2 INCH
Bottom:	1/2 INCH
Material of Construction	CARBON STEEL, ASTM A285-50T, GRADE B (FIREBOX QUALITY)
Fabrication Standard	1949 ASME BOILER CODE FOR UNFIRED PRESSURE VESSELS, SECTION VIII
Design Temperature (maximum)	220°F
Design Pressure (maximum specific gravity @ full waste capacity)	1.4 PSI
Secondary Containment (Steel Pan)	
Dimensions (diameter, height)	80' D X 5' H
Capacity (maximum)	185,000 GALLONS
Shell Thickness	
Wall:	1/2 INCH
Top:	1/2 INCH
Bottom:	1/2 INCH
Material of Construction (FIREBOX QUALITY)	CARBON STEEL, ASTM A285-50T, GRADE B
Cooling Coils	DISTRIBUTED (PERMANENT)
Designed Heat Transfer Capacity	UP TO 6,000,000 BTU/HR
Testing Pressure	300 PSIG
Material of Construction	CARBON STEEL, 2-INCH DIAMETER, SCHEDULE 40 SEAMLESS PIPE, ASTM A-106 OR A-53 GRADE A
Ventilation	
Primary Tank	150 CFM
Annulus[a]	CFM
Pump Installations	
Slurry Pumps	3-4 ADDED AS REQUIRED FOR WASTE TRANSFER
Jet pumps	1

Notes:

[a] Annulus ventilation system is equipped with a HEPA filter.

TABLE 7-46

TANK 10 (TYPE I)

DESCRIPTION	SPECIFICATION
Primary Tank Shell	
Dimensions (diameter, height)	75' D X 24.5' H
Fill Height (maximum)	273 INCHES
Capacity (nominal)	750,000 GALLONS
Shell Thickness	
Wall:	1/2 INCH
Top:	1/2 INCH
Bottom:	1/2 INCH
Material of Construction	CARBON STEEL, ASTM A285-50T, GRADE B (FIREBOX QUALITY)
Fabrication Standard	1949 ASME BOILER CODE FOR UNFIRED PRESSURE VESSELS, SECTION VIII
Design Temperature (maximum)	220 ° F
Design Pressure (maximum specific gravity @ full waste capacity)	1.4 PSI
Secondary Containment (Steel Pan)	
Dimensions (diameter, height)	80' D X 5' H
Capacity (maximum)	185,000 GALLONS
Shell Thickness	
Wall:	1/2 INCH
Top:	1/2 INCH
Bottom:	1/2 INCH
Material of Construction	CARBON STEEL, ASTM A285-50T, GRADE B (FIREBOX QUALITY)
Cooling Coils	DISTRIBUTED (PERMANENT)
Designed Heat Transfer Capacity	UP TO 6,000,000 BTU/HR
Testing Pressure	300 PSIG
Material of Construction	CARBON STEEL, 2-INCH DIAMETER, SCHEDULE 40 SEAMLESS PIPE, ASTM A-106 OR A-53 GRADE A
Ventilation	
Primary Tank	150 CFM
Annulus[a]	CFM
Pump Installations	
Slurry Pumps	3-4 ADDED AS REQUIRED FOR WASTE TRANSFER
Jet pumps	1

Notes:

[a] Annulus ventilation system is equipped with a HEPA filter.

TABLE 7-47

TANK 11 (TYPE I)

DESCRIPTION	SPECIFICATION
Primary Tank Shell	
Dimensions (diameter, height)	75' D X 24.5' H
Fill Height (maximum)	276 INCHES
Capacity (nominal)	750,000 GALLONS
Shell Thickness	
Wall:	1/2 INCH
Top:	1/2 INCH
Bottom:	1/2 INCH
Material of Construction (FIREBOX QUALITY)	CARBON STEEL, ASTM A285-50T, GRADE B
Fabrication Standard	1949 ASME BOILER CODE FOR UNFIRED PRESSURE VESSELS, SECTION VIII
Design Temperature (maximum)	220 °F
Design Pressure (maximum specific gravity @ full waste capacity)	1.4 PSI
Secondary Containment (Steel Pan)	
Dimensions (diameter, height)	80' D X 5' H
Capacity (maximum)	185,000 GALLONS
Shell Thickness	
Wall:	1/2 INCH
Top:	1/2 INCH
Bottom:	1/2 INCH
Material of Construction	CARBON STEEL, ASTM A285-50T, GRADE B (FIREBOX QUALITY)
Cooling Coils	DISTRIBUTED (PERMANENT)
Designed Heat Transfer Capacity	UP TO 6,000,000 BTU/HR
Testing Pressure	300 PSIG
Material of Construction	CARBON STEEL, 2-INCH DIAMETER, SCHEDULE 40 SEAMLESS PIPE, ASTM A-106 OR A-53 GRADE A
Ventilation	
Primary Tank	150 CFM
Annulus[a]	CFM
Pump Installations	
Slurry Pumps	3-4 ADDED AS REQUIRED FOR WASTE TRANSFER
Jet pumps	1

Notes:

[a] Annulus ventilation system is equipped with a HEPA filter.

TABLE 7-48

TANK 12 (TYPE I)

DESCRIPTION	SPECIFICATION
Primary Tank Shell	
Dimensions (diameter, height)	75' D X 24.5' H
Fill Height (maximum)	273 INCHES
Capacity (nominal)	750,000 GALLONS
Shell Thickness	
Wall:	1/2 INCH
Top:	1/2 INCH
Bottom:	1/2 INCH
Material of Construction	CARBON STEEL, ASTM A285-50T, GRADE B (FIREBOX QUALITY)
Fabrication Standard	1949 ASME BOILER CODE FOR UNFIRED PRESSURE VESSELS, SECTION VIII
Design Temperature (maximum)	220 °F
Design Pressure (maximum specific gravity @ full waste capacity)	1.4 PSI
Secondary Containment (Steel Pan)	
Dimensions (diameter, height)	80' D X 5' H
Capacity (maximum)	185,000 GALLONS
Shell Thickness	
Wall:	1/2 INCH
Top:	1/2 INCH
Bottom:	1/2 INCH
Material of Construction	CARBON STEEL, ASTM A285-50T, GRADE B (FIREBOX QUALITY)
Cooling Coils	DISTRIBUTED (PERMANENT)
Designed Heat Transfer Capacity	UP TO 6,000,000 BTU/HR
Testing Pressure	300 PSIG
Material of Construction	CARBON STEEL, 2-INCH DIAMETER, SCHEDULE 40 SEAMLESS PIPE, ASTM A-106 OR A-53 GRADE A
Ventilation	
Primary Tank	150 CFM
Annulus[a]	CFM
Pump Installations	
Slurry Pumps	3-4 ADDED AS REQUIRED FOR WASTE TRANSFER
Jet pumps	1

Notes:

[a] Annulus ventilation system is equipped with a HEPA filter.

Cooling System

Tank cooling is provided by 36 parallel cooling water pipe coils supported from the roof and horizontal coils across the tank bottom. The cooling coils are fabricated from 2-inch diameter schedule 40 carbon steel seamless pipe (ASTM A106 or A53 Grade A). The portion of the horizontal coils that extends from the approximated nominal fill level to the roof are fabricated from schedule 160 pipe.

To prevent contact between the waste and cooling water, a closed loop cooling system is utilized. The closed loop cooling water is cooled by well water within centrally located heat exchangers. The closed loop cooling system is pressurized so that if a crack within a cooling coil should form, waste will not be able to leak into the cooling system.

Any failed cooling coil can be isolated from the system by shutting valves located at each end of the coil. The cooling system is designed with sufficient heat transfer capacity to allow the failure of several cooling coils without causing a problem. This excess heat transfer capacity was provided to minimize the need for repairs which could expose workers to potential radiation sources.

Ventilation

Ventilation of both the primary tank and the annulus space between the primary tank and reinforced concrete wall is provided.

The primary tank is maintained at a slight negative pressure to prevent the release of airborne radionuclides. In addition to the radionuclides, hydrogen gas is generated within the tanks by the radiolytic decay of water. The hydrogen generation rate is dependent upon the radioactivity of the wastewater. Continuous ventilation of waste tanks containing fresh HHW is required to maintain the hydrogen gas concentration below the lower flammability limit. Type I waste tanks are not used to receive fresh wastes; therefore, there is a minimal threat of excessive quantities of hydrogen gas accumulating within the tank. The primary tank ventilation system eliminates the threat of accumulating flammable concentrations of hydrogen gas within the tank.

The primary tank ventilation systems used for the Type I waste tanks are shown as Figures 7-2 and 7-3. The primary tank ventilation equipment consists of an inlet HEPA filter, a condenser, a demister (optional), a steam heater, an exhaust HEPA filter and a fan. In a typical installation, air passes through the inlet HEPA filter and enters the waste tank through a 4-inch diameter pipe located at the tank top. The inlet HEPA filter is to prevent the release of radionuclides in the event that the exhaust system becomes blocked or the exhaust fan fails. The air is exhausted through a 12-inch diameter riser pipe which is positioned in the center of the tank.

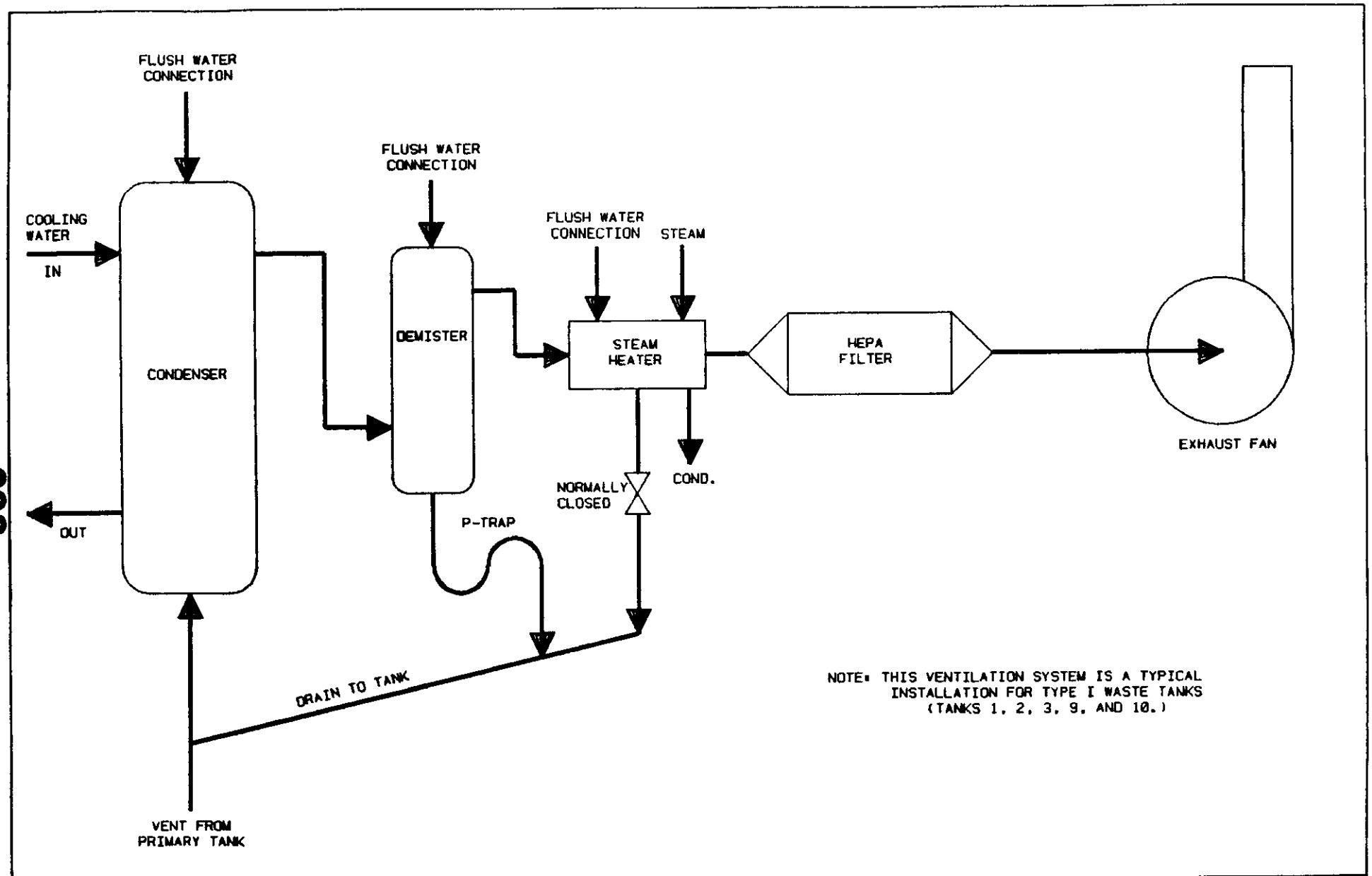

CAD NO.	TITLE:		
SE5-2-2006187		FIGURE 7-2 PRIMARY WASTE TANK VENTILATION SYSTEM(TYPE I)	NO SCALE 6000-44-3190W

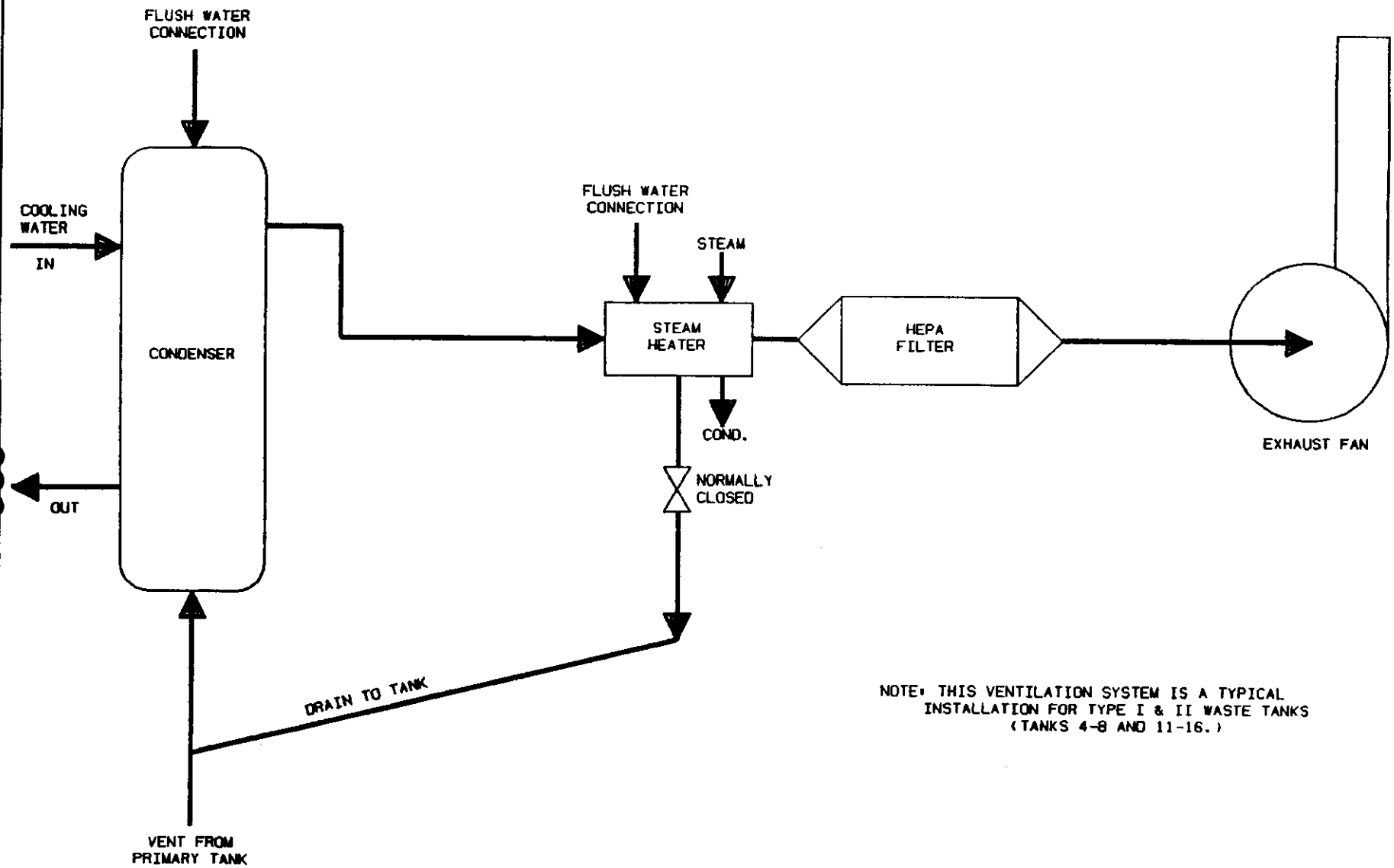

NOTE: THIS VENTILATION SYSTEM IS A TYPICAL INSTALLATION FOR TYPE I & II WASTE TANKS (TANKS 4-8 AND 11-16.)

CAD NO.	TITLE:	
SE5-2-2006187	FIGURE 7-3 PRIMARY WASTE TANK VENTILATION SYSTEM(TYPE I & II)	NO SCALE 6000-44-3190W

The tank air is continuously withdrawn at an approximate rate of 150 cubic feet per minute and passed through a condenser and a demister (optional) to remove water vapor and droplets which may contain radionuclides. The condensate is returned to the waste tank and the exhaust gasses flow through a steam heater to raise the air temperature above its dew point to prevent condensation on the exhaust HEPA filter. The filtered gasses are exhausted to the atmosphere by an induced draft fan.

Each tank is also equipped with an annulus ventilation system to prevent condensation within the annulus and to maintain the primary tank shell below the specified temperature limits. The annulus ventilation system consists of a forced draft fan, a heater, and ductwork within the annulus. Since this ventilation system uses a forced draft fan, the annulus is under a slight positive pressure. The annulus ventilation system is operated continuously to remove any accumulated condensate. The exhaust air is vented directly to the atmosphere unless leaks in the primary tank shell have been discovered. The annulus ventilation system for waste tanks with leaks have a HEPA filter installed at the outlet to remove any radionuclide particles from the exhaust gasses and at the inlet to prevent the release of radionuclides in the event that the exhaust system becomes blocked or the supply fan fails.

Instrumentation

Each Type I tank is equipped with standard instruments to measure liquid level, temperature, pressure, and to detect any leaks within the annulus space. The following discussion describes the function of each instrument:

Liquid Level - Liquid level in the primary tank is measured by a conductivity probe on the end of a graduated tape. The graduated tape is automatically raised and lowered by a motor drive. When the conductivity probe contacts the liquid surface, the electronic circuit is completed and signals the motor drive to raise the probe. The time interval between the raising/lowering cycles is approximately 1-1/2 minutes.

Under certain circumstances, the time interval may be lengthened. For example, the repeated raising and lowering of the conductivity probe in the waste concentrate receipt tanks causes salt to cling to the probe, resulting in an inaccurate reading. This condition is easily diagnosed because the reading returns to normal when the probe is flushed with water to remove the salt. In these tanks, the probe is "parked" one inch above the liquid level. The probe is manually lowered to check the liquid level once each eight-hour shift for waste tanks which contain free liquids. For waste tanks which contain only salt cake and/or sludge, the probe remains in a "parked" position since the liquid level within the tank cannot decrease; these tanks do not contain free liquids. The "parked" probe will alarm should liquids enter into the tank.

Each liquid level measuring unit is equipped with high and low level alarms. These alarm levels are also manually set by the Tank Farm operators and are activated when the conductivity probe contacts the liquid level outside the pre-set high and low level range. In addition, a high level conductivity probe is located about 5 inches below the primary tank fill limit. Hand-held tapes are used as a backup measurement.

Temperature - At least one thermowell, with multiple thermocouples, is installed in every tank. Thermocouples are also magnetically attached to the primary tank exterior to measure the wall temperature. Gauges are also used to measure the temperature of the tank vent exhaust, and the inlet and outlet temperatures of the cooling water which passes through the condenser for the primary tank ventilation system.

Pressure - All cooling coils are equipped with pressure relief valves at the outlet to prevent pipe rupture. Additionally, pressure or vacuum gauges are installed at several points in the tank ventilation system to measure the pressure differential between the primary tank and annulus space, and to detect discontinued flow or plugged filters.

Exhaust Gasses - Air samplers are used to detect any release of radionuclides to the atmosphere from the primary tank and annulus ventilation systems. Current plans are to install isokinetic samplers on all Type I waste tanks to provide continuous radioactive monitoring of both the primary and annulus exhaust gases.

A portable combustible gas meter is used to detect the presence of hydrogen gas in the vapor space of the tank. The waste tanks are normally checked for hydrogen gas once each week. Current plans are to install hydrogen gas monitors on all Type I waste tanks to continuously measure the concentration of hydrogen gas within the vapor space of the primary tank.

Leak Detection - At least two conductivity probes are installed in the annulus to detect the presence of any liquid. An alarm is activated should any liquid be detected. Instruments to determine liquid levels are also installed, as needed within the annulus.

Testing and Construction

Exploratory drilling was conducted prior to construction to determine site suitability. At least one soil boring was drilled at the center of each waste tank location. The concrete foundation pad (capable of supporting a full primary tank) was built on undisturbed earth. A seismic analysis conducted in 1973 concluded that Type I

waste tanks systems can withstand a seismic loading of approximately 0.2 g without breaching the primary tank shell or the secondary containment liner (Du Pont, 1975).

Automatic submerged metal-arc welding was used whenever possible. Shielded metal-arc welding was used for vertical seams and other areas where the use of the preferred method was not possible. All joints are full penetration type. Welding procedures were performed in accordance with Section IX of the ASME Boiler and Pressure Vessel code.

All welds in the primary tank shell and secondary containment pan were radiographically inspected. Any defective welds were repaired and then radiographically rechecked. The welds in the flat bottoms of both the primary tank shell and secondary containment pan were vacuum tested for leaks. Both vessels were hydrostatically tested at full capacity for a period of 24 hours.

The cooling water piping was hydrostatically tested at 300 psig and then leak tested with 100 psig air pressure in the piping.

7.4.2 Type II Waste Tanks

The following section describes the structural design testing and construction, cooling system, ventilation system, and instrumentation for Type II waste tanks (Tanks 13 to 16). As previously mentioned, Tank 16 is being addressed under the RFI/corrective action provisions required by Section 3004(u) of the HSWA. Specifications for Tank 16 are not included in this

permit application. The Type II waste tank design is shown as Figure 7-4. The specifications for Tanks 13 to 15 are summarized in Tables 7-49 to 7-51, respectively.

Structural Design

The primary tank shell is a closed top cylindrical steel tank with a diameter of 85 feet, a fill height of 27 feet, and a capacity of 1,030,000 gallons. The tank walls are constructed of 5/8 inch thick open hearth carbon steel (ASTM designation, A285-50T, Grade B, firebox quality). The top and bottom of the primary tank shell are 1/2 inch thick and also fabricated from carbon steel. The cylindrical walls are joined to the flat-steel top and bottom base plates by continuous welds.

The primary tank shell is set within a carbon steel circular "pan" which is 5 feet deep and has a diameter 5 feet larger than the primary tank. The pan provides secondary containment should the primary tank shell leak.

The tank system is erected within a reinforced concrete vault to provide structural support for the underground tank and radiation shielding. Unlike Type I tanks, Type II tanks are not covered with soil. Radiation shielding is provided by increasing the thickness of the concrete roof. The thickness of the concrete roofs, walls, and foundations are 45 inches, 33 inches, and 42 inches

TABLE 7-49

TANK 13 (TYPE II)

DESCRIPTION	SPECIFICATION
Primary Tank Shell	
Dimensions (diameter, height)	85' D X 27' H
Fill Height (maximum)	306 INCHES
Capacity (nominal)	1,030,000 GALLONS
Shell Thickness	
Wall:	5/8 INCH WALL 7/8 INCH LOWER KNUCKLE PLATE 9/16 INCH UPPER KNUCKLE PLATE
Top:	1/2 INCH
Bottom:	1/2 INCH
Material of Construction	CARBON STEEL, ASTM A285-50T GRADE B (FIREBOX QUALITY)
Fabrication Standard	1952 ASME BOILER CODE FOR UNFIRED PRESSURE VESSELS, SECTION VIII
Design Temperature (maximum)	350°F
Design Pressure (maximum specific gravity @ full waste capacity)	2.0
Secondary Containment (Steel Pan)	
Dimensions (diameter, height)	90' D X 5' H
Capacity (maximum)	235,000 GALLONS
Shell Thickness	
Wall:	1/2 INCH
Top:	1/2 INCH
Bottom:	1/2 INCH
Material of Construction	CARBON STEEL, ASTM A285-50T, GRADE B (FIREBOX QUALITY)
Cooling Coils	
Designed Heat Transfer Capacity	UP TO 6,000,000 BTU/HR
Testing Pressure	300 PSIG
Material of Construction	CARBON STEEL, 2-INCH DIAMETER, SCHEDULE 40 SEAMLESS PIPE, ASTM A-106 OR A-53 GRADE A
Ventilation	
Primary Tank	150 CFM
Annulus[a]	CFM
Pump Installations	
Slurry Pumps	3-4 ADDED AS REQUIRED FOR WASTE TRANSFER
Jet pumps	1

Notes:

[a] Annulus ventilation system is equipped with a HEPA filter.

TABLE 7-50

TANK 14 (TYPE II)

DESCRIPTION	SPECIFICATION
Primary Tank Shell	
Dimensions (diameter, height)	85' D X 27' H
Fill Height (maximum)	306 INCHES
Capacity (nominal)	1,030,000 GALLONS
Shell Thickness	
Wall:	5/8 INCH WALL 7/8 INCH LOWER KNUCKLE PLATE 9/16 INCH UPPER KNUCKLE PLATE
Top:	1/2 INCH
Bottom:	1/2 INCH
Material of Construction	CARBON STEEL, ASTM A285-50T GRADE B (FIREBOX QUALITY)
Fabrication Standard	1952 ASME BOILER CODE FOR UNFIRED PRESSURE VESSELS, SECTION VIII
Design Temperature (maximum)	350 ° F
Design Pressure (maximum specific gravity @ full waste capacity)	1.80
Secondary Containment (Steel Pan)	
Dimensions (diameter, height)	90' D X 5' H
Capacity (maximum)	235,000 GALLONS
Shell Thickness	
Wall:	1/2 INCH
Top:	1/2 INCH
Bottom:	1/2 INCH
Material of Construction	CARBON STEEL, ASTM A285-50T, GRADE B (FIREBOX QUALITY)
Cooling Coils	
Designed Heat Transfer Capacity	UP TO 6,000,000 BTU/HR
Testing Pressure	300 PSIG
Material of Construction	CARBON STEEL, 2-INCH DIAMETER, SCHEDULE 40 SEAMLESS PIPE, ASTM A-106 OR A-53 GRADE A
Ventilation	
Primary Tank	150 CFM
Annulus[a]	CFM
Pump Installations	
Slurry Pumps	3-4 ADDED AS REQUIRED FOR WASTE TRANSFER
Jet pumps	1

Notes:

[a] Annulus ventilation system is equipped with a HEPA filter.

TABLE 7-51

TANK 15 (TYPE II)

DESCRIPTION	SPECIFICATION
Primary Tank Shell	
Dimensions (diameter, height)	85' D X 27' H
Fill Height (maximum)	306 INCHES
Capacity (nominal)	1,030,000 GALLONS
Shell Thickness	
Wall:	5/8 INCH WALL 7/8 INCH LOWER KNUCKLE PLATE 9/16 INCH UPPER KNUCKLE PLATE
Top:	1/2 INCH
Bottom:	1/2 INCH
Material of Construction	CARBON STEEL, ASTM A285-50T GRADE B (FIREBOX QUALITY)
Fabrication Standard	1952 ASME BOILER CODE FOR UNFIRED PRESSURE VESSELS, SECTION VIII
Design Temperature (maximum)	350 ° F
Design Pressure (maximum specific gravity @ full waste capacity)	1.80
Secondary Containment (Steel Pan)	
Dimensions (diameter, height)	90' D X 5' H
Capacity (maximum)	235,000 GALLONS
Shell Thickness	
Wall:	1/2 INCH
Top:	1/2 INCH
Bottom:	1/2 INCH
Material of Construction	CARBON STEEL, ASTM A285-50T, GRADE B (FIREBOX QUALITY)
Cooling Coils	
Designed Heat Transfer Capacity	UP TO 6,000,000 BTU/HR
Testing Pressure	300 PSIG
Material of Construction	CARBON STEEL, 2-INCH DIAMETER, SCHEDULE 40 SEAMLESS PIPE, ASTM A-106 OR A-53 GRADE A
Ventilation	
Primary Tank	150 CFM
Annulus[a]	CFM
Pump Installations	
Slurry Pumps	3-4 ADDED AS REQUIRED FOR WASTE TRANSFER
Transfer Pumps	1
Jet pumps	1

Notes:

[a] Annulus ventilation system is equipped with a HEPA filter.

respectively. Type II tanks have a single roof support column located in the center of the tank. The concrete column is covered with 1/2 inch thick steel plates and rests on the bottom of the primary tank shell. The steel plate cover is welded to the top and bottom steel plates of the primary tank shell.

Transfer lines enter and exit the tank through the tank shell near the tank top or a riser in the concrete roof.

Cooling System

Cooling is provided for each Type II tank by 44 parallel cooling water coils supported from the tank roof and horizontal coils across the tank bottom. The cooling coils are fabricated from 2-inch diameter schedule 40 carbon steel seamless pipe (ASTM A106 or A53 Grade A). Schedule 160 pipe was used for cooling coils that extend from the normal fill level to the roof. The installation and operation of this cooling system is similar to the Type I cooling system.

Ventilation

The primary tank ventilation system for Type II waste tanks is shown on Figure 7-3. The function of this primary tank ventilation is similar to the description provided for the Type I waste tanks.

The annulus ventilation system for Type II tanks is similar to the ventilation system used for Type I tanks.

Instrumentation

The instrumentation for Type II tanks is similar to Type I tanks.

Testing and Construction

Exploratory drilling was conducted prior to construction to determine site suitability. At least one soil boring was drilled at the center of each waste tank location. The concrete foundation pad (capable of supporting a full primary tank) was built on undisturbed earth. A seismic analysis conducted in 1973 concludes that Type II waste tank systems can withstand a seismic loading of approximately 0.2 g without breaching the primary tank shell or the secondary containment pan (Du Pont, 1975).

Automatic submerged metal-arc welding was utilized whenever possible. Shielded metal-arc welding was used for vertical seams and other areas where the use of other preferred methods were not possible. All joints are full penetration type. Welding procedures were performed in accordance with Section IX of the ASME Boiler and Pressure Vessel Code.

All welds in the primary tank shell pan were radiographically inspected. Any defective welds were repaired and then radiographically rechecked. The welds in the flat bottoms of both the primary tank shell and secondary containment pan were vacuum tested for leaks. Both vessels were hydrostatically tested at full capacity for a period of 24 hours.

Cooling coils were hydrostatically tested at 300 psig and then leak tested using air at 100 psig mixed with a soap solution.

7.4.3 Type III and IIIA Waste Tanks

The following section describes the structural design testing and construction, cooling system, ventilation system, and instrumentation for Type III/IIIA waste tanks (Tanks 25 to 51). As previously mentioned, Tank 50 is already permitted under SCDHEC Industrial Wastewater Permit #14520. Specifications for Tank 50 are not included in this permit application. The Type III/IIIA waste tank design is shown as Figure 7-5. The specifications for Tanks 25 to 49 and 51 are summarized in Tables 7-52 to 7-77, respectively.

Structural Design

Type III and IIIA tanks are the newest waste tanks. Based upon operational experience obtained from the previously constructed waste tanks, Type III and IIIA tanks were designed to resolve the formation of cracks discovered in the Type I and II waste tank designs. The primary cause for these cracks is attributed to stress-corrosion cracking of the mild carbon steel. This type of cracking is believed to be caused by a combination of high steel stresses and exposure of the steel to an aggressive nitrate (NO_3) environment. The aggressiveness of the nitrate attack increases with temperature. The right combination of steel stress, corrosive environment, and temperature will cause the formation of a crack. The elimination of any one factor (stress, corrosive

TABLE 7-52

TANK 25 (TYPE IIIA)

DESCRIPTION		SPECIFICATION
Primary Tank Shell		
Dimensions (diameter, height)		85' D X 33' H
Fill Height (maximum)		372 INCHES
Capacity (nominal)		1,300,000 GALLONS
Shell Thickness	Outer Wall:	3/4 INCH LOWER SECTION 5/8 INCH MIDDLE SECTION 1/2 INCH UPPER SECTION
	Inner Wall:	5/8 INCH LOWER SECTION 1/2 INCH UPPER SECTION
	Top:	1/2 INCH
	Bottom:	1/2 INCH
Material of Construction		CARBON STEEL, ASTM A516 GRADE 70, NORMALIZED[a]
Fabrication Standard		1977 ASME BOILER CODE FOR UNFIRED PRESSURE VESSELS, SECTION VIII, DIVISION 1.
Design Temperature		
Design Pressure (maximum specific gravity @ full waste capacity)		2.2
Secondary Tank Shell		
Dimensions (diameter, height)		90' D X 33' H
Capacity (approximate)		1,560,000 GALLONS
Shell Thickness	Outer Wall:	3/8 INCH
	Inner Wall:	3/8 INCH
	Top:	3/8 INCH
	Bottom:	3/8 INCH
Material of Construction		CARBON STEEL, A516 GRADE 70, HOT-ROLLED
Cooling Coils		VERTICAL (PERMANENT)
Design Heat Transfer Capacity		UP TO 6,000,000 BTU/HR
Testing Pressure		500 PSIG
Material of Construction		CARBON STEEL, 2-INCH DIAMETER, SCHEDULE 40 SEAMLESS PIPE, ASTM A106 OR A53 GRADE A
Ventilation		
Primary Tank		150 CFM
Annulus		6000 CFM
Pump Installation		
Slurry Pumps		3 ADDED AS REQUIRED FOR WASTE TRANSFER
Jet Pumps		1

NOTE:
[a] Steel plates were normalized by heat treatment to increase resistance to brittle fracture.

TABLE 7-53

TANK 26 (TYPE IIIA)

DESCRIPTION		SPECIFICATION
Primary Tank Shell		
Dimensions (diameter, height)		85' D X 33' H
Fill Height (maximum)		372 INCHES
Capacity (nominal)		1,300,000 GALLONS
Shell Thickness	Outer Wall:	3/4 INCH LOWER SECTION 5/8 INCH MIDDLE SECTION 1/2 INCH UPPER SECTION
	Inner Wall:	5/8 INCH LOWER SECTION 1/2 INCH UPPER SECTION
	Top:	1/2 INCH
	Bottom:	1/2 INCH
Material of Construction		CARBON STEEL, ASTM A516 GRADE 70, NORMALIZED[a]
Fabrication Standard		1977 ASME BOILER CODE FOR UNFIRED PRESSURE VESSELS, SECTION VIII, DIVISION 1.
Design Temperature		
Design Pressure (maximum specific gravity @ full waste capacity)		2.2
Secondary Tank Shell		
Dimensions (diameter, height)		90' D X 33' H
Capacity (approximate)		1,560,000 GALLONS
Shell Thickness	Outer Wall:	3/8 INCH
	Inner Wall:	3/8 INCH
	Top:	3/8 INCH
	Bottom:	3/8 INCH
Material of Construction		CARBON STEEL, A516 GRADE 70, HOT-ROLLED
Cooling Coils		VERTICAL (PERMANENT)
Design Heat Transfer Capacity		UP TO 6,000,000 BTU/HR
Testing Pressure		500 PSIG
Material of Construction		CARBON STEEL, 2-INCH DIAMETER, SCHEDULE 40 SEAMLESS PIPE, ASTM A106 OR A53 GRADE A
Ventilation		
Primary Tank		150 CFM
Annulus (maximum)		6000 CFM
Pump Installation		
Transfer Pumps		2 (EVAPORATOR FEED PUMPS)
Jet Pumps		1

NOTE:
[a] Steel plates were normalized by heat treatment to increase resistance to brittle fracture.

TABLE 7-54

TANK 27 (TYPE IIIA)

DESCRIPTION		SPECIFICATION
Primary Tank Shell		
Dimensions (diameter, height)		85' D X 33' H
Fill Height (maximum)		372 INCHES
Capacity (nominal)		1,300,000 GALLONS
Shell Thickness	Outer Wall:	3/4 INCH LOWER SECTION 5/8 INCH MIDDLE SECTION 1/2 INCH UPPER SECTION
	Inner Wall:	5/8 INCH LOWER SECTION 1/2 INCH UPPER SECTION
	Top:	1/2 INCH
	Bottom:	1/2 INCH
Material of Construction		CARBON STEEL, ASTM A516 GRADE 70, NORMALIZED[a]
Fabrication Standard		1977 ASME BOILER CODE FOR UNFIRED PRESSURE VESSELS, SECTION VIII, DIVISION 1.
Design Temperature		
Design Pressure (maximum specific gravity @ full waste capacity)		2.2
Secondary Tank Shell		
Dimensions (diameter, height)		90' D X 33' H
Capacity (approximate)		1,560,000 GALLONS
Shell Thickness	Outer Wall:	3/8 INCH
	Inner Wall:	3/8 INCH
	Top:	3/8 INCH
	Bottom:	3/8 INCH
Material of Construction		CARBON STEEL, A516 GRADE 70, HOT-ROLLED
Cooling Coils		VERTICAL (PERMANENT)
Design Heat Transfer Capacity		UP TO 6,000,000 BTU/HR
Testing Pressure		500 PSIG
Material of Construction		CARBON STEEL, 2-INCH DIAMETER, SCHEDULE 40 SEAMLESS PIPE, ASTM A106 OR A53 GRADE A
Ventilation		
Primary Tank		150 CFM
Annulus (maximum)		6000 CFM
Pump Installation		
Slurry Pumps		3 ADDED AS REQUIRED FOR WASTE TRANSFER
Jet Pumps		1

NOTE:
[a] Steel plates were normalized by heat treatment to increase resistance to brittle fracture.

TABLE 7-55

TANK 28 (TYPE IIIA)

DESCRIPTION		SPECIFICATION
Primary Tank Shell		
Dimensions (diameter, height)		85' D X 33' H
Fill Height (maximum)		372 INCHES
Capacity (nominal)		1,300,000 GALLONS
Shell Thickness	Outer Wall:	3/4 INCH LOWER SECTION 5/8 INCH MIDDLE SECTION 1/2 INCH UPPER SECTION
	Inner Wall:	5/8 INCH LOWER SECTION 1/2 INCH UPPER SECTION
	Top:	1/2 INCH
	Bottom:	1/2 INCH
Material of Construction		CARBON STEEL, ASTM A516 GRADE 70, NORMALIZED[a]
Fabrication Standard		1977 ASME BOILER CODE FOR UNFIRED PRESSURE VESSELS, SECTION VIII, DIVISION 1.
Design Temperature		
Design Pressure (maximum specific gravity @ full waste capacity)		2.2
Secondary Tank Shell		
Dimensions (diameter, height)		90' D X 33' H
Capacity (approximate)		1,560,000 GALLONS
Shell Thickness	Outer Wall:	3/8 INCH
	Inner Wall:	3/8 INCH
	Top:	3/8 INCH
	Bottom:	3/8 INCH
Material of Construction		CARBON STEEL, A516 GRADE 70, HOT-ROLLED
Cooling Coils		VERTICAL (PERMANENT)
Design Heat Transfer Capacity		UP TO 6,000,000 BTU/HR
Testing Pressure		500 PSIG
Material of Construction		CARBON STEEL, 2-INCH DIAMETER, SCHEDULE 40 SEAMLESS PIPE, ASTM A106 OR A53 GRADE A
Ventilation		
Primary Tank		150 CFM
Annulus (maximum)		6000 CFM
Pump Installation		
Slurry Pumps		3 ADDED AS REQUIRED FOR WASTE TRANSFER
Transfer Pumps		1 (TELESCOPIC)

NOTE:
[a] Steel plates were normalized by heat treatment to increase resistance to brittle fracture.

TABLE 7-56

TANK 29 (TYPE III)

DESCRIPTION		SPECIFICATION
Primary Tank Shell		
Dimensions (diameter, height)		85' D X 33' H
Fill Height (maximum)		372 INCHES
Capacity (nominal)		1,300,000 GALLONS
Shell Thickness	Outer Wall:	3/4 INCH LOWER SECTION 5/8 INCH MIDDLE SECTION 1/2 INCH UPPER SECTION
	Inner Wall:	5/8 INCH LOWER SECTION 1/2 INCH UPPER SECTION
	Top:	1/2 INCH
	Bottom:	1/2 INCH
Material of Construction		CARBON STEEL, ASTM A516 GRADE 70, HOT-ROLLED[a]
Fabrication Standard		1977 ASME BOILER CODE FOR UNFIRED PRESSURE VESSELS, SECTION VIII, DIVISION 1.
Design Temperature		
Design Pressure (maximum specific gravity @ full waste capacity)		2.2
Secondary Tank Shell		
Dimensions (diameter, height)		90' D X 33' H
Capacity (approximate)		1,560,000 GALLONS
Shell Thickness	Outer Wall:	3/8 INCH
	Inner Wall:	3/8 INCH
	Top:	3/8 INCH
	Bottom:	3/8 INCH
Material of Construction		CARBON STEEL, A516 GRADE 70, HOT-ROLLED
Cooling Coils		TUBE BUNDLES (ROOF SUPPORTED)
Design Heat Transfer Capacity		UP TO 600,000 BTU/HR (EACH)
Testing Pressure		500 PSIG
Material of Construction		CARBON STEEL, 2-INCH DIAMETER, SCHEDULE 40 SEAMLESS PIPE, ASTM A106 OR A53 GRADE A
Number of Bundles		9
Ventilation		
Primary Tank		150 CFM
Annulus (maximum)		6000 CFM
Pump Installation		
Slurry Pumps		3 ADDED AS REQUIRED FOR WASTE TRANSFER
Jet Pumps		1

NOTE:

[a] Steel plates were normalized by heat treatment to increase resistance to brittle fracture.

TABLE 7-57

TANK 30 (TYPE III)

DESCRIPTION		SPECIFICATION
Primary Tank Shell		
Dimensions (diameter, height)		85' D X 33' H
Fill Height (maximum)		372 INCHES
Capacity (nominal)		1,300,000 GALLONS
Shell Thickness	Outer Wall:	3/4 INCH LOWER SECTION 5/8 INCH MIDDLE SECTION 1/2 INCH UPPER SECTION
	Inner Wall:	5/8 INCH LOWER SECTION 1/2 INCH UPPER SECTION
	Top:	1/2 INCH
	Bottom:	1/2 INCH
Material of Construction		CARBON STEEL, ASTM A516 GRADE 70, HOT-ROLLED[a]
Fabrication Standard		1977 ASME BOILER CODE FOR UNFIRED PRESSURE VESSELS, SECTION VIII, DIVISION 1.
Design Temperature		
Design Pressure (maximum specific gravity @ full waste capacity)		2.2
Secondary Tank Shell		
Dimensions (diameter, height)		90' D X 33' H
Capacity (approximate)		1,560,000 GALLONS
Shell Thickness	Outer Wall:	3/8 INCH
	Inner Wall:	3/8 INCH
	Top:	3/8 INCH
	Bottom:	3/8 INCH
Material of Construction		CARBON STEEL, A516 GRADE 70, HOT-ROLLED
Cooling Coils		TUBE BUNDLES (ROOF SUPPORTED)
Design Heat Transfer Capacity		UP TO 600,000 BTU/HR (EACH)
Testing Pressure		500 PSIG
Material of Construction		CARBON STEEL, 2-INCH DIAMETER, SCHEDULE 40 SEAMLESS PIPE, ASTM A106 OR A53 GRADE A
Number of Bundles		5
Ventilation		
Primary Tank		150 CFM
Annulus (maximum)		6000 CFM
Pump Installation		
Slurry Pumps		3-4 ADDED AS REQUIRED FOR WASTE TRANSFER
Jet Pumps		1

NOTE:
[a] Steel plates were normalized by heat treatment to increase resistance to brittle fracture.

TABLE 7-58

TANK 31 (TYPE III)

DESCRIPTION		SPECIFICATION
Primary Tank Shell		
Dimensions (diameter, height)		85' D X 33' H
Fill Height (maximum)		372 INCHES
Capacity (nominal)		1,300,000 GALLONS
Shell Thickness	Outer Wall:	3/4 INCH LOWER SECTION 5/8 INCH MIDDLE SECTION 1/2 INCH UPPER SECTION
	Inner Wall:	5/8 INCH LOWER SECTION 1/2 INCH UPPER SECTION
	Top:	1/2 INCH
	Bottom:	1/2 INCH
Material of Construction		CARBON STEEL, ASTM A516 GRADE 70, HOT-ROLLED[a]
Fabrication Standard		1977 ASME BOILER CODE FOR UNFIRED PRESSURE VESSELS, SECTION VIII, DIVISION 1.
Design Temperature		
Design Pressure (maximum specific gravity @ full waste capacity)		2.2
Secondary Tank Shell		
Dimensions (diameter, height)		90' D X 33' H
Capacity (approximate)		1,560,000 GALLONS
Shell Thickness	Outer Wall:	3/8 INCH
	Inner Wall:	3/8 INCH
	Top:	3/8 INCH
	Bottom:	3/8 INCH
Material of Construction		CARBON STEEL, A516 GRADE 70, HOT-ROLLED
Cooling Coils		TUBE BUNDLES (ROOF SUPPORTED)
Design Heat Transfer Capacity		UP TO 600,000 BTU/HR (EACH)
Testing Pressure		500 PSIG
Material of Construction		CARBON STEEL, 2-INCH DIAMETER, SCHEDULE 40 SEAMLESS PIPE, ASTM A106 OR A53 GRADE A
Number of bundles		7
Ventilation		
Primary Tank		150 CFM
Annulus (maximum)		6000 CFM
Pump Installation		
Slurry Pumps		3 ADDED AS REQUIRED FOR WASTE TRANSFER
Jet Pumps		1

NOTE:
[a] Steel plates were normalized by heat treatment to increase resistance to brittle fracture.

TABLE 7-59

TANK 32 (TYPE III)

DESCRIPTION		SPECIFICATION
Primary Tank Shell		
Dimensions (diameter, height)		85' D X 33' H
Fill Height (maximum)		372 INCHES
Capacity (nominal)		1,300,000 GALLONS
Shell Thickness	Outer Wall:	3/4 INCH LOWER SECTION 5/8 INCH MIDDLE SECTION 1/2 INCH UPPER SECTION
	Inner Wall:	5/8 INCH LOWER SECTION 1/2 INCH UPPER SECTION
	Top:	1/2 INCH
	Bottom:	1/2 INCH
Material of Construction		CARBON STEEL, ASTM A516 GRADE 70, HOT-ROLLED[a]
Fabrication Standard		1977 ASME BOILER CODE FOR UNFIRED PRESSURE VESSELS, SECTION VIII, DIVISION 1.
Design Temperature		
Design Pressure (maximum specific gravity @ full waste capacity)		2.2
Secondary Tank Shell		
Dimensions (diameter, height)		90' D X 33' H
Capacity (approximate)		1,560,000 GALLONS
Shell Thickness	Outer Wall:	3/8 INCH
	Inner Wall:	3/8 INCH
	Top:	3/8 INCH
	Bottom:	3/8 INCH
Material of Construction		CARBON STEEL, A516 GRADE 70, HOT-ROLLED
Cooling Coils		TUBE BUNDLES (ROOF SUPPORTED)
Design Heat Transfer Capacity		UP TO 600,000 BTU/HR (EACH)
Testing Pressure		500 PSIG
Material of Construction		CARBON STEEL, 2-INCH DIAMETER, SCHEDULE 40 SEAMLESS PIPE, ASTM A106 OR A53 GRADE A
Number of Bundles		5
Ventilation		
Primary Tank		150 CFM
Annulus (maximum)		6000 CFM
Pump Installation		
Slurry Pumps		3-4 ADDED AS REQUIRED FOR WASTE TRANSFER
Jet Pumps		1

NOTE:

[a] Steel plates were normalized by heat treatment to increase resistance to brittle fracture.

TABLE 7-60

TANK 33 (TYPE III)

DESCRIPTION		SPECIFICATION
Primary Tank Shell		
Dimensions (diameter, height)		85' D X 33' H
Fill Height (maximum)		372 INCHES
Capacity (nominal)		1,300,000 GALLONS
Shell Thickness	Outer Wall:	3/4 INCH LOWER SECTION
		5/8 INCH MIDDLE SECTION
		1/2 INCH UPPER SECTION
	Inner Wall:	5/8 INCH LOWER SECTION
		1/2 INCH UPPER SECTION
	Top:	1/2 INCH
	Bottom:	1/2 INCH
Material of Construction		CARBON STEEL, ASTM A516 GRADE 70, HOT-ROLLED[a]
Fabrication Standard		1977 ASME BOILER CODE FOR UNFIRED PRESSURE VESSELS, SECTION VIII, DIVISION 1.
Design Temperature		
Design Pressure (maximum specific gravity @ full waste capacity)		2.2
Secondary Tank Shell		
Dimensions (diameter, height)		90' D X 33' H
Capacity (approximate)		1,560,000 GALLONS
Shell Thickness	Outer Wall:	3/8 INCH
	Inner Wall:	3/8 INCH
	Top:	3/8 INCH
	Bottom:	3/8 INCH
Material of Construction		CARBON STEEL, A516 GRADE 70, HOT-ROLLED
Cooling Coils		TUBE BUNDLES (ROOF SUPPORTED)
Design Heat Transfer Capacity		UP TO 600,000 BTU/HR (EACH)
Testing Pressure		500 PSIG
Material of Construction		CARBON STEEL, 2-INCH DIAMETER, SCHEDULE 40 SEAMLESS PIPE, ASTM A106 OR A53 GRADE A
Number of Bundles		8
Ventilation		
Primary Tank		150 CFM
Annulus (maximum)		6000 CFM
Pump Installation		JET PUMP

NOTE:
[a] Steel plates were normalized by heat treatment to increase resistance to brittle fracture.

TABLE 7-61

TANK 34 (TYPE III)

DESCRIPTION		SPECIFICATION
Primary Tank Shell		
Dimensions (diameter, height)		85' D X 33' H
Fill Height (maximum)		372 INCHES
Capacity (nominal)		1,300,000 GALLONS
Shell Thickness	Outer Wall:	3/4 INCH LOWER SECTION 5/8 INCH MIDDLE SECTION 1/2 INCH UPPER SECTION
	Inner Wall:	5/8 INCH LOWER SECTION 1/2 INCH UPPER SECTION
	Top:	1/2 INCH
	Bottom:	1/2 INCH
Material of Construction		CARBON STEEL, ASTM A516 GRADE 70, HOT-ROLLED[a]
Fabrication Standard		1977 ASME BOILER CODE FOR UNFIRED PRESSURE VESSELS, SECTION VIII, DIVISION 1.
Design Temperature		
Design Pressure (maximum specific gravity @ full waste capacity)		2.2
Secondary Tank Shell		
Dimensions (diameter, height)		90' D X 33' H
Capacity (approximate)		1,560,000 GALLONS
Shell Thickness	Outer Wall:	3/8 INCH
	Inner Wall:	3/8 INCH
	Top:	3/8 INCH
	Bottom:	3/8 INCH
Material of Construction		CARBON STEEL, A516 GRADE 70, HOT-ROLLED
Cooling Coils		TUBE BUNDLES (ROOF SUPPORTED)
Design Heat Transfer Capacity		UP TO 600,000 BTU/HR (EACH)
Testing Pressure		500 PSIG
Material of Construction		CARBON STEEL, 2-INCH DIAMETER, SCHEDULE 40 SEAMLESS PIPE, ASTM A106 OR A53 GRADE A
Number of Bundles		10
Ventilation		
Primary Tank		150 CFM
Annulus (maximum)		6000 CFM
Pump Installation		JET PUMP

NOTE:
[a] Steel plates were normalized by heat treatment to increase resistance to brittle fracture.

TABLE 7-62

TANK 35 (TYPE IIIA)

DESCRIPTION		SPECIFICATION
Primary Tank Shell		
Dimensions (diameter, height)		85' D X 33' H
Fill Height (maximum)		372 INCHES
Capacity (nominal)		1,300,000 GALLONS
Shell Thickness	Outer Wall:	3/4 INCH LOWER SECTION 5/8 INCH MIDDLE SECTION 1/2 INCH UPPER SECTION
	Inner Wall:	5/8 INCH LOWER SECTION 1/2 INCH UPPER SECTION
	Top:	1/2 INCH
	Bottom:	1/2 INCH
Material of Construction		CARBON STEEL, ASTM A516 GRADE 70, NORMALIZED[a]
Fabrication Standard		1977 ASME BOILER CODE FOR UNFIRED PRESSURE VESSELS, SECTION VIII, DIVISION 1.
Design Temperature		
Design Pressure (maximum specific gravity @ full waste capacity)		2.2
Secondary Tank Shell		
Dimensions (diameter, height)		90' D X 33' H
Capacity (approximate)		1,560,000 GALLONS
Shell Thickness	Outer Wall:	3/8 INCH
	Inner Wall:	3/8 INCH
	Top:	3/8 INCH
	Bottom:	3/8 INCH
Material of Construction		CARBON STEEL, A516 GRADE 70, HOT-ROLLED
Cooling Coils		TUBE BUNDLES (ROOF SUPPORTED)
Design Heat Transfer Capacity		UP TO 600,000 BTU/HR (EACH)
Testing Pressure		500 PSIG
Material of Construction		CARBON STEEL, 2-INCH DIAMETER, SCHEDULE 40 SEAMLESS PIPE, ASTM A106 OR A53 GRADE A
Number of Bundles		5
Ventilation		
Primary Tank		150 CFM
Annulus (maximum)		6000 CFM
Pump Installation		
Slurry Pumps		3-4 ADDED AS REQUIRED FOR WASTE TRANSFER
Jet Pumps		1

NOTE:
[a] Steel plates were normalized by heat treatment to increase resistance to brittle fracture.

TABLE 7-63

TANK 36 (TYPE IIIA)

DESCRIPTION		SPECIFICATION
Primary Tank Shell		
Dimensions (diameter, height)		85' D X 33' H
Fill Height (maximum)		372 INCHES
Capacity (nominal)		1,300,000 GALLONS
Shell Thickness	Outer Wall:	3/4 INCH LOWER SECTION 5/8 INCH MIDDLE SECTION 1/2 INCH UPPER SECTION
	Inner Wall:	5/8 INCH LOWER SECTION 1/2 INCH UPPER SECTION
	Top:	1/2 INCH
	Bottom:	1/2 INCH
Material of Construction		CARBON STEEL, ASTM A516 GRADE 70, NORMALIZED[a]
Fabrication Standard		1977 ASME BOILER CODE FOR UNFIRED PRESSURE VESSELS, SECTION VIII, DIVISION 1.
Design Temperature		
Design Pressure (maximum specific gravity @ full waste capacity)		2.2
Secondary Tank Shell		
Dimensions (diameter, height)		90' D X 33' H
Capacity (approximate)		1,560,000 GALLONS
Shell Thickness	Outer Wall:	3/8 INCH
	Inner Wall:	3/8 INCH
	Top:	3/8 INCH
	Bottom:	3/8 INCH
Material of Construction		CARBON STEEL, A516 GRADE 70, HOT-ROLLED
Cooling Coils		VERTICAL (PERMANENT)
Design Heat Transfer Capacity		UP TO 6,000,000 BTU/HR
Testing Pressure		500 PSIG
Material of Construction		CARBON STEEL, 2-INCH DIAMETER, SCHEDULE 40 SEAMLESS PIPE, ASTM A106 OR A53 GRADE A
Ventilation		
Primary Tank		150 CFM
Annulus (maximum)		6000 CFM
Pump Installation		
Slurry Pumps		3-4 ADDED AS REQUIRED FOR WASTE TRANSFER
Jet Pumps		1

NOTE:
[a] Steel plates were normalized by heat treatment to increase resistance to brittle fracture.

TABLE 7-64

TANK 37 (TYPE IIIA)

DESCRIPTION		SPECIFICATION
Primary Tank Shell		
Dimensions (diameter, height)		85' D X 33' H
Fill Height (maximum)		372 INCHES
Capacity (nominal)		1,300,000 GALLONS
Shell Thickness	Outer Wall:	3/4 INCH LOWER SECTION 5/8 INCH MIDDLE SECTION 1/2 INCH UPPER SECTION
	Inner Wall:	5/8 INCH LOWER SECTION 1/2 INCH UPPER SECTION
	Top:	1/2 INCH
	Bottom:	1/2 INCH
Material of Construction		CARBON STEEL, ASTM A516 GRADE 70, NORMALIZED[a]
Fabrication Standard		1977 ASME BOILER CODE FOR UNFIRED PRESSURE VESSELS, SECTION VIII, DIVISION 1.
Design Temperature		
Design Pressure (maximum specific gravity @ full waste capacity)		2.2
Secondary Tank Shell		
Dimensions (diameter, height)		90' D X 33' H
Capacity (approximate)		1,560,000 GALLONS
Shell Thickness	Outer Wall:	3/8 INCH
	Inner Wall:	3/8 INCH
	Top:	3/8 INCH
	Bottom:	3/8 INCH
Material of Construction		CARBON STEEL, A516 GRADE 70, HOT-ROLLED
Cooling Coils		VERTICAL (PERMANENT)
Design Heat Transfer Capacity		UP TO 6,000,000 BTU/HR
Testing Pressure		500 PSIG
Material of Construction		CARBON STEEL, 2-INCH DIAMETER, SCHEDULE 40 SEAMLESS PIPE, ASTM A106 OR A53 GRADE A
Ventilation		
Primary Tank		150 CFM
Annulus (maximum)		6000 CFM
Pump Installation		
Slurry Pumps		3 ADDED AS REQUIRED FOR WASTE TRANSFER
Jet Pumps		1

NOTE:
[a] Steel plates were normalized by heat treatment to increase resistance to brittle fracture.

TABLE 7-65

TANK 38 (TYPE IIIA)

DESCRIPTION		SPECIFICATION
Primary Tank Shell		
Dimensions (diameter, height)		85' D X 33' H
Fill Height (maximum)		372 INCHES
Capacity (nominal)		1,300,000 GALLONS
Shell Thickness	Outer Wall:	3/4 INCH LOWER SECTION 5/8 INCH MIDDLE SECTION 1/2 INCH UPPER SECTION
	Inner Wall:	5/8 INCH LOWER SECTION 1/2 INCH UPPER SECTION
	Top:	1/2 INCH
	Bottom:	1/2 INCH
Material of Construction		CARBON STEEL, ASTM A537, CLASS I, NORMALIZED[a]
Fabrication Standard		1977 ASME BOILER CODE FOR UNFIRED PRESSURE VESSELS, SECTION VIII, DIVISION 1.
Design Temperature		
Design Pressure (maximum specific gravity @ full waste capacity)		2.2
Secondary Tank Shell		
Dimensions (diameter, height)		90' D X 33' H
Capacity (approximate)		1,560,000 GALLONS
Shell Thickness	Outer Wall:	3/8 INCH
	Inner Wall:	3/8 INCH
	Top:	3/8 INCH
	Bottom:	3/8 INCH
Material of Construction		CARBON STEEL, A516 GRADE 70, HOT-ROLLED
Cooling Coils		VERTICAL (PERMANENT)
Design Heat Transfer Capacity		UP TO 6,000,000 BTU/HR
Testing Pressure		500 PSIG
Material of Construction		CARBON STEEL, 2-INCH DIAMETER, SCHEDULE 40 SEAMLESS PIPE, ASTM A106 OR A53 GRADE A
Ventilation		
Primary Tank		150 CFM
Annulus (maximum)		6000 CFM
Pump Installation		
Slurry Pumps		3-4 ADDED AS REQUIRED FOR WASTE TRANSFER
Jet Pumps		1

NOTE:

[a] Steel plates were normalized by heat treatment to increase resistance to brittle fracture.

[b] Annulus ventilation sytem is equipped with a HEPA filter.

TABLE 7-66

TANK 39 (TYPE IIIA)

DESCRIPTION		SPECIFICATION
Primary Tank Shell		
Dimensions (diameter, height)		85' D X 33' H
Fill Height (maximum)		372 INCHES
Capacity (nominal)		1,300,000 GALLONS
Shell Thickness	Outer Wall:	3/4 INCH LOWER SECTION 5/8 INCH MIDDLE SECTION 1/2 INCH UPPER SECTION
	Inner Wall:	5/8 INCH LOWER SECTION 1/2 INCH UPPER SECTION
	Top:	1/2 INCH
	Bottom:	1/2 INCH
Material of Construction		CARBON STEEL, ASTM 4537, CLASS I, NORMALIZED[a]
Fabrication Standard		1977 ASME BOILER CODE FOR UNFIRED PRESSURE VESSELS, SECTION VIII, DIVISION 1.
Design Temperature		
Design Pressure (maximum specific gravity @ full waste capacity)		2.2
Secondary Tank Shell		
Dimensions (diameter, height)		90' D X 33' H
Capacity (approximate)		1,560,000 GALLONS
Shell Thickness	Outer Wall:	3/8 INCH
	Inner Wall:	3/8 INCH
	Top:	3/8 INCH
	Bottom:	3/8 INCH
Material of Construction		CARBON STEEL, A516 GRADE 70, HOT-ROLLED
Cooling Coils		VERTICAL (PERMANENT)
Design Heat Transfer Capacity		UP TO 6,000,000 BTU/HR
Testing Pressure		500 PSIG
Material of Construction		CARBON STEEL, 2-INCH DIAMETER, SCHEDULE 40 SEAMLESS PIPE, ASTM A106 OR A53 GRADE A
Ventilation		
Primary Tank		150 CFM
Annulus (maximum)		6000 CFM
Pump Installation		
Slurry Pumps		3-4 ADDED AS REQUIRED FOR WASTE TRANSFER
Jet Pumps		1

NOTE:

[a] Steel plates were normalized by heat treatment to increase resistance to brittle fracture.

TABLE 7-67

TANK 40 (TYPE IIIA)

DESCRIPTION		SPECIFICATION
Primary Tank Shell		
Dimensions (diameter, height)		85' D X 33' H
Fill Height (maximum)		372 INCHES
Capacity (nominal)		1,300,000 GALLONS
Shell Thickness	Outer Wall:	3/4 INCH LOWER SECTION 5/8 INCH MIDDLE SECTION 1/2 INCH UPPER SECTION
	Inner Wall:	5/8 INCH LOWER SECTION 1/2 INCH UPPER SECTION
	Top:	1/2 INCH
	Bottom:	1/2 INCH
Material of Construction		CARBON STEEL, ASTM A537 CLASS I, NORMALIZED[a]
Fabrication Standard		1977 ASME BOILER CODE FOR UNFIRED PRESSURE VESSELS, SECTION VIII, DIVISION 1.
Design Temperature		
Design Pressure (maximum specific gravity @ full waste capacity)		2.2
Secondary Tank Shell		
Dimensions (diameter, height)		90' D X 33' H
Capacity (approximate)		1,560,000 GALLONS
Shell Thickness	Outer Wall:	3/8 INCH
	Inner Wall:	3/8 INCH
	Top:	3/8 INCH
	Bottom:	3/8 INCH
Material of Construction		CARBON STEEL, A537 CLASS I, HOT-ROLLED
Cooling Coils		VERTICAL (PERMANENT)
Design Heat Transfer Capacity		UP TO 6,000,000 BTU/HR
Testing Pressure		500 PSIG
Material of Construction		CARBON STEEL, 2-INCH DIAMETER, SCHEDULE 40 SEAMLESS PIPE, ASTM A106 OR A53 GRADE A
Ventilation		
Primary Tank		150 CFM
Annulus (maximum)		6000 CFM
Pump Installation		
Slurry Pumps		3-4 ADDED AS REQUIRED FOR WASTE TRANSFER
Transfer Pumps		2 (TELESCOPIC)
Jet pumps		1

NOTE:

[a] Steel plates were normalized by heat treatment to increase resistance to brittle fracture.

TABLE 7-68

TANK 41 (TYPE IIIA)

DESCRIPTION		SPECIFICATION
Primary Tank Shell		
Dimensions (diameter, height)		85' D X 33' H
Fill Height (maximum)		372 INCHES
Capacity (nominal)		1,300,000 GALLONS
Shell Thickness	Outer Wall:	3/4 INCH LOWER SECTION 5/8 INCH MIDDLE SECTION 1/2 INCH UPPER SECTION
	Inner Wall:	5/8 INCH LOWER SECTION 1/2 INCH UPPER SECTION
	Top:	1/2 INCH
	Bottom:	1/2 INCH
Material of Construction		CARBON STEEL, ASTM A537 CLASS I, NORMALIZED[a]
Fabrication Standard		1977 ASME BOILER CODE FOR UNFIRED PRESSURE VESSELS, SECTION VIII, DIVISION 1.
Design Temperature		
Design Pressure (maximum specific gravity @ full waste capacity)		2.2
Secondary Tank Shell		
Dimensions (diameter, height)		90' D X 33' H
Capacity (approximate)		1,560,000 GALLONS
Shell Thickness	Outer Wall:	3/8 INCH
	Inner Wall:	3/8 INCH
	Top:	3/8 INCH
	Bottom:	3/8 INCH
Material of Construction		CARBON STEEL, A516 GRADE 70, HOT-ROLLED
Cooling Coils		VERTICAL (PERMANENT)
Design Heat Transfer Capacity		UP TO 6,000,000 BTU/HR
Testing Pressure		500 PSIG
Material of Construction		CARBON STEEL, 2-INCH DIAMETER, SCHEDULE 40 SEAMLESS PIPE, ASTM A106 OR A53 GRADE A
Ventilation		
Primary Tank		150 CFM
Annulus (maximum)		6000 CFM
Pump Installation		
Slurry Pumps		3 ADDED AS REQUIRED FOR WASTE TRANSFER
Jet Pumps		1

NOTE:
[a] Steel plates were normalized by heat treatment to increase resistance to brittle fracture.

TABLE 7-69

TANK 42 (TYPE IIIA)

DESCRIPTION		SPECIFICATION
Primary Tank Shell		
Dimensions (diameter, height)		85' D X 33' H
Fill Height (maximum)		372 INCHES
Capacity (nominal)		1,300,000 GALLONS
Shell Thickness	Outer Wall:	3/4 INCH LOWER SECTION 5/8 INCH MIDDLE SECTION 1/2 INCH UPPER SECTION
	Inner Wall:	5/8 INCH LOWER SECTION 1/2 INCH UPPER SECTION
	Top:	1/2 INCH
	Bottom:	1/2 INCH
Material of Construction		CARBON STEEL, ASTM A537 CLASS I, NORMALIZED[a]
Fabrication Standard		1977 ASME BOILER CODE FOR UNFIRED PRESSURE VESSELS, SECTION VIII, DIVISION 1.
Design Temperature		
Design Pressure (maximum specific gravity @ full waste capacity)		2.2
Secondary Tank Shell		
Dimensions (diameter, height)		90' D X 33' H
Capacity (approximate)		1,560,000 GALLONS
Shell Thickness	Outer Wall:	3/8 INCH
	Inner Wall:	3/8 INCH
	Top:	3/8 INCH
	Bottom:	3/8 INCH
Material of Construction		CARBON STEEL, A516 GRADE 70, HOT-ROLLED
Cooling Coils		VERTICAL (PERMANENT)
Design Heat Transfer Capacity		UP TO 6,000,000 BTU/HR
Testing Pressure		500 PSIG
Material of Construction		CARBON STEEL, 2-INCH DIAMETER, SCHEDULE 40 SEAMLESS PIPE, ASTM A106 OR A53 GRADE A
Ventilation		
Primary Tank		150 CFM
Annulus (maximum)		6000 CFM
Pump Installation		
Slurry Pumps		3-4 ADDED AS REQUIRED FOR WASTE TRANSFER
Transfer Pumps		1 (TELESCOPIC)
Jet pumps		1

NOTE:

[a] Steel plates were normalized by heat treatment to increase resistance to brittle fracture.

TABLE 7-70

TANK 43 (TYPE IIIA)

DESCRIPTION		SPECIFICATION
Primary Tank Shell		
Dimensions (diameter, height)		85' D X 33' H
Fill Height (maximum)		372 INCHES
Capacity (nominal)		1,300,000 GALLONS
Shell Thickness	Outer Wall:	3/4 INCH LOWER SECTION 5/8 INCH MIDDLE SECTION 1/2 INCH UPPER SECTION
	Inner Wall:	5/8 INCH LOWER SECTION 1/2 INCH UPPER SECTION
	Top:	1/2 INCH
	Bottom:	1/2 INCH
Material of Construction		CARBON STEEL, ASTM A537 CLASS I, NORMALIZED[a]
Fabrication Standard		1977 ASME BOILER CODE FOR UNFIRED PRESSURE VESSELS, SECTION VIII, DIVISION 1.
Design Temperature		
Design Pressure (maximum specific gravity @ full waste capacity)		2.2
Secondary Tank Shell		
Dimensions (diameter, height)		90' D X 33' H
Capacity (approximate)		1,560,000 GALLONS
Shell Thickness	Outer Wall:	3/8 INCH
	Inner Wall:	3/8 INCH
	Top:	3/8 INCH
	Bottom:	3/8 INCH
Material of Construction		CARBON STEEL, A516 GRADE 70, HOT-ROLLED
Cooling Coils		VERTICAL (PERMANENT)
Design Heat Transfer Capacity		UP TO 6,000,000 BTU/HR
Testing Pressure		500 PSIG
Material of Construction		CARBON STEEL, 2-INCH DIAMETER, SCHEDULE 40 SEAMLESS PIPE, ASTM A106 OR A53 GRADE A
Ventilation		
Primary Tank		150 CFM
Annulus (maximum)		6000 CFM
Pump Installation		
Slurry Pumps		3-4 ADDED AS REQUIRED FOR WASTE TRANSFER
Transfer Pumps		1 (EVAPORATOR FEED)
Jet Pumps		1

NOTE:

[a] Steel plates were normalized by heat treatment to increase resistance to brittle fracture.

TABLE 7-71

TANK 44 (TYPE IIIA)

DESCRIPTION		SPECIFICATION
Primary Tank Shell		
Dimensions (diameter, height)		85' D X 33' H
Fill Height (maximum)		372 INCHES
Capacity (nominal)		1,300,000 GALLONS
Shell Thickness	Outer Wall:	3/4 INCH LOWER SECTION 5/8 INCH MIDDLE SECTION 1/2 INCH UPPER SECTION
	Inner Wall:	5/8 INCH LOWER SECTION 1/2 INCH UPPER SECTION
	Top:	1/2 INCH
	Bottom:	1/2 INCH
Material of Construction		CARBON STEEL, ASTM A537 CLASS I, NORMALIZED[a]
Fabrication Standard		1977 ASME BOILER CODE FOR UNFIRED PRESSURE VESSELS, SECTION VIII, DIVISION 1.
Design Temperature		
Design Pressure (maximum specific gravity @ full waste capacity)		2.2
Secondary Tank Shell		
Dimensions (diameter, height)		90' D X 33' H
Capacity (approximate)		1,560,000 GALLONS
Shell Thickness	Outer Wall:	3/8 INCH
	Inner Wall:	3/8 INCH
	Top:	3/8 INCH
	Bottom:	3/8 INCH
Material of Construction		CARBON STEEL, A516 GRADE 70, HOT-ROLLED
Cooling Coils		VERTICAL (PERMANENT)
Design Heat Transfer Capacity		UP TO 6,000,000 BTU/HR
Testing Pressure		500 PSIG
Material of Construction		CARBON STEEL, 2-INCH DIAMETER, SCHEDULE 40 SEAMLESS PIPE, ASTM A106 OR A53 GRADE A
Ventilation		
Primary Tank		150 CFM
Annulus (maximum)		6000 CFM
Pump Installation		
Slurry Pumps		3 ADDED AS REQUIRED FOR WASTE TRANSFER
Transfer Pumps		1 (TELESCOPIC)

NOTE:

[a] Steel plates were normalized by heat treatment to increase resistance to brittle fracture.

TABLE 7-72

TANK 45 (TYPE IIIA)

DESCRIPTION		SPECIFICATION
Primary Tank Shell		
Dimensions (diameter, height)		85' D X 33' H
Fill Height (maximum)		372 INCHES
Capacity (nominal)		1,300,000 GALLONS
Shell Thickness	Outer Wall:	3/4 INCH LOWER SECTION 5/8 INCH MIDDLE SECTION 1/2 INCH UPPER SECTION
	Inner Wall:	5/8 INCH LOWER SECTION 1/2 INCH UPPER SECTION
	Top:	1/2 INCH
	Bottom:	1/2 INCH
Material of Construction		CARBON STEEL, ASTM A537 CLASS I, NORMALIZED[a]
Fabrication Standard		1977 ASME BOILER CODE FOR UNFIRED PRESSURE VESSELS, SECTION VIII, DIVISION 1.
Design Temperature		
Design Pressure (maximum specific gravity @ full waste capacity)		2.2
Secondary Tank Shell		
Dimensions (diameter, height)		90' D X 33' H
Capacity (approximate)		1,560,000 GALLONS
Shell Thickness	Outer Wall:	3/8 INCH
	Inner Wall:	3/8 INCH
	Top:	3/8 INCH
	Bottom:	3/8 INCH
Material of Construction		CARBON STEEL, A516 GRADE 70, HOT-ROLLED
Cooling Coils		VERTICAL (PERMANENT)
Design Heat Transfer Capacity		UP TO 6,000,000 BTU/HR
Testing Pressure		500 PSIG
Material of Construction		CARBON STEEL, 2-INCH DIAMETER, SCHEDULE 40 SEAMLESS PIPE, ASTM A106 OR A53 GRADE A
Ventilation		
Primary Tank		150 CFM
Annulus (maximum)		6000 CFM
Pump Installation		
Slurry Pumps		3 ADDED AS REQUIRED FOR WASTE TRANSFER
Transfer Pumps		1 (TELESCOPIC)

NOTE:

[a] Steel plates were normalized by heat treatment to increase resistance to brittle fracture.

TABLE 7-73

TANK 46 (TYPE IIIA)

DESCRIPTION		SPECIFICATION
Primary Tank Shell		
Dimensions (diameter, height)		85' D X 33' H
Fill Height (maximum)		372 INCHES
Capacity (nominal)		1,300,000 GALLONS
Shell Thickness	Outer Wall:	3/4 INCH LOWER SECTION 5/8 INCH MIDDLE SECTION 1/2 INCH UPPER SECTION
	Inner Wall:	5/8 INCH LOWER SECTION 1/2 INCH UPPER SECTION
	Top:	1/2 INCH
	Bottom:	1/2 INCH
Material of Construction		CARBON STEEL, ASTM A537 CLASS I, NORMALIZED[a]
Fabrication Standard		1977 ASME BOILER CODE FOR UNFIRED PRESSURE VESSELS, SECTION VIII, DIVISION 1.
Design Temperature		
Design Pressure (maximum specific gravity @ full waste capacity)		2.2
Secondary Tank Shell		
Dimensions (diameter, height)		90' D X 33' H
Capacity (approximate)		1,560,000 GALLONS
Shell Thickness	Outer Wall:	3/8 INCH
	Inner Wall:	3/8 INCH
	Top:	3/8 INCH
	Bottom:	3/8 INCH
Material of Construction		CARBON STEEL, A516 GRADE 70, HOT-ROLLED
Cooling Coils		VERTICAL (PERMANENT)
Design Heat Transfer Capacity		UP TO 6,000,000 BTU/HR
Testing Pressure		500 PSIG
Material of Construction		CARBON STEEL, 2-INCH DIAMETER, SCHEDULE 40 SEAMLESS PIPE, ASTM A106 OR A53 GRADE A
Ventilation		
Primary Tank		150 CFM
Annulus (maximum)		6000 CFM
Pump Installation		NONE[b]

NOTE:

[a] Steel plates were normalized by heat treatment to increase resistance to brittle fracture.

[b] This tank is empty, a pump is not required.

TABLE 7-74

TANK 47 (TYPE IIIA)

DESCRIPTION		SPECIFICATION
Primary Tank Shell		
Dimensions (diameter, height)		85' D X 33' H
Fill Height (maximum)		372 INCHES
Capacity (nominal)		1,300,000 GALLONS
Shell Thickness	Outer Wall:	3/4 INCH LOWER SECTION 5/8 INCH MIDDLE SECTION 1/2 INCH UPPER SECTION
	Inner Wall:	5/8 INCH LOWER SECTION 1/2 INCH UPPER SECTION
	Top:	1/2 INCH
	Bottom:	1/2 INCH
Material of Construction		CARBON STEEL, ASTM A537 CLASS I, NORMALIZED[a]
Fabrication Standard		1977 ASME BOILER CODE FOR UNFIRED PRESSURE VESSELS, SECTION VIII, DIVISION 1.
Design Temperature		
Design Pressure (maximum specific gravity @ full waste capacity)		2.2
Secondary Tank Shell		
Dimensions (diameter, height)		90' D X 33' H
Capacity (approximate)		1,560,000 GALLONS
Shell Thickness	Outer Wall:	3/8 INCH
	Inner Wall:	3/8 INCH
	Top:	3/8 INCH
	Bottom:	3/8 INCH
Material of Construction		CARBON STEEL, A516 GRADE 70, HOT-ROLLED
Cooling Coils		VERTICAL (PERMANENT)
Design Heat Transfer Capacity		UP TO 6,000,000 BTU/HR
Testing Pressure		500 PSIG
Material of Construction		CARBON STEEL, 2-INCH DIAMETER, SCHEDULE 40 SEAMLESS PIPE, ASTM A106 OR A53 GRADE A
Ventilation		
Primary Tank		150 CFM
Annulus (maximum)		6000 CFM
Pump Installation		
Slurry Pumps		3 ADDED AS REQUIRED FOR WASTE TRANSFER
Transfer Pumps		1 (TELESCOPIC)

NOTE:

[a] Steel plates were normalized by heat treatment to increase resistance to brittle fracture.

[b] Annulus ventilation sytem is equipped with a HEPA filter.

TABLE 7-75

TANK 48 (TYPE IIIA)

DESCRIPTION		SPECIFICATION
Primary Tank Shell		
Dimensions (diameter, height)		85' D X 33' H
Fill Height (maximum)		372 INCHES
Capacity (nominal)		1,300,000 GALLONS
Shell Thickness	Outer Wall:	3/4 INCH LOWER SECTION 5/8 INCH MIDDLE SECTION 1/2 INCH UPPER SECTION
	Inner Wall:	5/8 INCH LOWER SECTION 1/2 INCH UPPER SECTION
	Top:	1/2 INCH
	Bottom:	1/2 INCH
Material of Construction		CARBON STEEL, ASTM A537 CLASS I, NORMALIZED[a]
Fabrication Standard		1977 ASME BOILER CODE FOR UNFIRED PRESSURE VESSELS, SECTION VIII, DIVISION 1.
Design Temperature		
Design Pressure (maximum specific gravity @ full waste capacity)		2.2
Secondary Tank Shell		
Dimensions (diameter, height)		90' D X 33' H
Capacity (approximate)		1,560,000 GALLONS
Shell Thickness	Outer Wall:	3/8 INCH
	Inner Wall:	3/8 INCH
	Top:	3/8 INCH
	Bottom:	3/8 INCH
Material of Construction		CARBON STEEL, A516 GRADE 70, HOT-ROLLED
Cooling Coils		VERTICAL (PERMANENT)
Design Heat Transfer Capacity		UP TO 6,000,000 BTU/HR
Testing Pressure		500 PSIG
Material of Construction		CARBON STEEL, 2-INCH DIAMETER, SCHEDULE 40 SEAMLESS PIPE, ASTM A106 OR A53 GRADE A
Ventilation		
Primary Tank		150 CFM
Annulus (maximum)		6000 CFM

Pump Installation
- Slurry Pumps - (4) Bingham-Williamette low shear
- Filter Feed Pumps - (2) Barrett-Haentjens low shear
- Transfer Pump - (1) Barrett-Haentjens standard telescopic

NOTE:
[a] Steel plates were normalized by heat treatment to increase resistance to brittle fracture.

TABLE 7-76

TANK 49 (TYPE IIIA)

DESCRIPTION		SPECIFICATION
Primary Tank Shell		
Dimensions (diameter, height)		85' D X 33' H
Fill Height (maximum)		372 INCHES
Capacity (nominal)		1,300,000 GALLONS
Shell Thickness	Outer Wall:	3/4 INCH LOWER SECTION 5/8 INCH MIDDLE SECTION 1/2 INCH UPPER SECTION
	Inner Wall:	5/8 INCH LOWER SECTION 1/2 INCH UPPER SECTION
	Top:	1/2 INCH
	Bottom:	1/2 INCH
Material of Construction		CARBON STEEL, ASTM A537 CLASS I, NORMALIZED[a]
Fabrication Standard		1977 ASME BOILER CODE FOR UNFIRED PRESSURE VESSELS, SECTION VIII, DIVISION 1.
Design Temperature		
Design Pressure (maximum specific gravity @ full waste capacity)		2.2
Secondary Tank Shell		
Dimensions (diameter, height)		90' D X 33' H
Capacity (approximate)		1,560,000 GALLONS
Shell Thickness	Outer Wall:	3/8 INCH
	Inner Wall:	3/8 INCH
	Top:	3/8 INCH
	Bottom:	3/8 INCH
Material of Construction		CARBON STEEL, A516 GRADE 70, HOT-ROLLED
Cooling Coils		VERTICAL (PERMANENT)
Design Heat Transfer Capacity		UP TO 6,000,000 BTU/HR
Testing Pressure		500 PSIG
Material of Construction		CARBON STEEL, 2-INCH DIAMETER, SCHEDULE 40 SEAMLESS PIPE, ASTM A106 OR A53 GRADE A
Ventilation		
Primary Tank		150 CFM
Annulus (maximum)		6000 CFM
Pump Installation		
Slurry Pumps (4) Bingham-Williamette quad-volute		
Transfer Pumps (2) Barrett-Haentjens standard telescopic		

NOTE:
[a] Steel plates were normalized by heat treatment to increase resistance to brittle fracture.

TABLE 7-77

TANK 51 (TYPE IIIA)

DESCRIPTION		SPECIFICATION
Primary Tank Shell		
Dimensions (diameter, height)		85' D X 33' H
Fill Height (maximum)		372 INCHES
Capacity (nominal)		1,300,000 GALLONS
Shell Thickness	Outer Wall:	3/4 INCH LOWER SECTION 5/8 INCH MIDDLE SECTION 1/2 INCH UPPER SECTION
	Inner Wall:	5/8 INCH LOWER SECTION 1/2 INCH UPPER SECTION
	Top:	1/2 INCH
	Bottom:	1/2 INCH
Material of Construction		CARBON STEEL, ASTM A537 CLASS I, NORMALIZED[a]
Fabrication Standard		1977 ASME BOILER CODE FOR UNFIRED PRESSURE VESSELS, SECTION VIII, DIVISION 1.
Design Temperature		
Design Pressure (maximum specific gravity @ full waste capacity)		2.2
Secondary Tank Shell		
Dimensions (diameter, height)		90' D X 33' H
Capacity (approximate)		1,560,000 GALLONS
Shell Thickness	Outer Wall:	3/8 INCH
	Inner Wall:	3/8 INCH
	Top:	3/8 INCH
	Bottom:	3/8 INCH
Material of Construction		CARBON STEEL, A516 GRADE 70, HOT-ROLLED
Cooling Coils		VERTICAL (PERMANENT)
Design Heat Transfer Capacity		UP TO 6,000,000 BTU/HR
Testing Pressure		500 PSIG
Material of Construction		CARBON STEEL, 2-INCH DIAMETER, SCHEDULE 40 SEAMLESS PIPE, ASTM A106 OR A53 GRADE A
Ventilation		
Primary Tank		150 CFM
Annulus (maximum)		6000 CFM

Pump Installation
- Slurry Pumps - (4) Bingham-Williamette quad-volute
- Transfer Pumps - (2) Barrett-Haentjens standard telescopic
- Jet Pumps - (1) Site fabricated telescoping transfer jet

NOTE:
[a] Steel plates were normalized by heat treatment to increase resistance to brittle fracture.

environment or temperature) significantly reduces the potential for formation of a crack.

Control of the steel stresses was incorporated into the structural design of the Type III waste tanks. Corrosive environment and temperature control is provided administratively. These administrative limits are presented on Table 7-78. Each of these controls are described in further detail below.

To prevent stress cracking, several structural design modifications were made. Steels with a higher carbon content and yield strength were used to fabricate the primary and secondary tank shells. To minimize the occurrence of high stresses, the primary tank shell was heated after fabrication to relieve the stresses generated during fabrication. The central roof-support column was integrated with the concrete foundation to provide an annulus space between the support column and primary tank shell. This arrangement minimizes the transfer of stresses from the roof load to the primary tank shell.

To control the nitrate corrosion attack of the steel, the waste composition is adjusted by periodically adding process chemicals (i.e., sodium hydroxide and sodium nitrite). The sodium hydroxide is added to raise the pH of the waste to around 13. The presence of both nitrite and caustic ions inhibits the cracking of mild steel which could be caused by either substance individually. The sodium nitrite is added as an inhibitor to nitrate crack growth. The addition of these process chemicals started in 1976 and are common to all waste tanks. Based upon laboratory studies, limits for nitrate/hydroxide/nitrite

TABLE 7-78

STRESS-CORROSION LIMITS

NITRATE/NITRITE/HYDROXIDE CONCENTRATIONS

Nitrate Ion Concentration In Waste $[NO_3]$ (Molar)	MINIMUM REQUIRED CONCENTRATIONS Hydroxide Ion $[OH]$ (Molar)	Hydroxide + Nitrite Ion $[OH] + [NO_2]$ (Molar)	Nitrite Ion $[NO_2]$ (Molar)
5.5 to 8.5[a].5[a]	0.6	1.1	--
2.75 to 5.5	0.3	1.1	--
1.0 to 2.75	0.1 x $[NO_3]$	0.4 x $[NO_3]$	--
<1 (except Tanks 40, 42, 51 and Type IV Tanks)	0.01	--	--
40, 42, 51, and Type IV			
0.02 to 1.0	1.0[b]	--	A[b]
<0.02	1.0[b]	--	B[b]

TEMPERATURE

WASTE COMPONENT	MAXIMUM TEMPERATURE
Supernate (Fresh waste and during salt cake dissolution)	70 °C
Supernate (Waste concentration receipt tanks, evaporator feed tanks, and aged waste)	Boiling point temperature
Salt Cake	Boiling point of aqueous phase at the tank wall
Sludge	Boiling point of aqueous phase at the tank wall

Source: Du Pont, 1986

Notes:

[a] The maximum nitrate ion concentration $[NO_3]$ is 8.5 molar.

[b] Either Hydroxide $[OH]$ or Nitrite $[NO_2]$ concentration requirements must be satisfied where:

$$A = 0.038 \times [NO_3] \times 10^{[0.041\,T]}$$

$$B = 0.00076 \times 10^{[0.041T]}$$

(T is in °C)

concentrations were established to prevent nitrate corrosion attack of the steel.

The temperature of the steel is controlled by regulating the air flow through the annulus and limiting the amount of radionuclides (decay heat) introduced into the waste tank to below the capacity of the cooling water system. These temperature controls are employed for all of the waste tanks except for Type IV waste tanks. Since Type IV waste tanks do not have an annulus space or cooling coils (see Section 7.4.4), temperature is controlled by limiting the radionuclide content.

No leak sites have been found in Type III or IIIA waste tanks.

The primary differences between Type III and IIIA tanks are:

- Type IIIA tanks have larger cooling grooves at the tank bottom and higher annulus air flow capacity,
- Type IIIA tank tops are sloped to drain rainwater,
- Type IIIA tanks have permanently mounted, bottom supported, vertical cooling coils, and
- Type IIIA tanks are fabricated from normalized steel.

The primary tank shell is 85 feet in diameter, 33 feet in fill height, and has a capacity of 1,300,000 gallons. The primary tank shell is constructed from 1/2, 5/8, and 3/4 inch thick open hearth carbon steels. Tanks 29 to 34 are fabricated from ASTM A516 Grade 70, hot-rolled steel. Tanks 25 to 28 and 35 to 37 are fabricated from ASTM A516

Grade 70, normalized steel. Tank 38 to 51 are fabricated from ASTM A537 Class I normalized steel. All three of these steels have essentially the same composition.

Unlike Type I and II tanks, Type III and IIIA tanks have full-height secondary containment (doubled walled). The primary tank shell is completely enclosed by a secondary carbon steel shell. The secondary shell is 3/8 inch thick and has a diameter which is 5 feet larger than the primary tank shell.

Each tank unit is erected within a reinforced concrete vault to provide structural support and radiation shielding. The concrete roof, wall, and foundation thickness are 48 inches, 30 inches, and 42 inches respectively. The primary tank rests on a 6 inch thick bed of insulating concrete grooved for air flow within the secondary containment.

Transfer lines enter and exit the tank through either the tank shell near the tank top or a riser in the concrete roof.

Cooling System

Type III tanks have forced main cooling mechanisms within the primary tanks. Two types of cooling coils are employed for Type III waste tanks. One system has permanently affixed coiling coils which were installed prior to completion of the waste tank. These cooling coils are support from the top of the tank. The other system uses tube bundles which are installed through a tank riser. These tube bundles are installed after

construction of the waste tank is completed. As previously mentioned, Type IIIA waste tanks have force main cooling systems with coils that are suspended from the tank bottoms.

Each permanently installed cooling coil system has a maximum heat removal capacity of up to 6,000,000 Btu/hour. The cooling coils are fabricated from 2-inch diameter schedule 40 carbon steel seamless pipe (ASTM A106 or A53 Grade A). Tanks 25 to 28 and 36 to 51 have a permanently affixed cooling coil system installed in them.

Tanks 29 to 35 have cooling coil bundles that are installed through and suspended from the tank risers. These seven waste tanks are constructed with 10 tank risers which can accommodate a cooling coil unit (normally have 5-9 bundles installed). Each cooling coil bundle has a maximum heat removal capacity of approximately 600,000 Btu/hour.

Unlike the Type I and II tanks which have horizontal cooling coils along the primary tank shell floor, Type III and IIIA tank bottoms are cooled by forced air which passes through grooved channels in the annulus space between the primary and secondary tank shells. In Type III tanks, the radial grooves have a design capacity of 2,000 cubic feet per minute. Type IIIA tanks have larger radial grooves which increases the design air flow capacity to 8,000 cubic feet per minute.

Ventilation

The primary tank ventilation system for the Type III and IIIA tanks are illustrated in Figure 7-6. The principal function of this ventilation system is similar to the description provided for Type I waste tanks (see Section 7.4.1).

The annulus ventilation system design was modified for Type III and IIIA tank to provide bottom cooling (see cooling system description) as well as dehumidification. The exhaust fan for the Type III/IIIA annulus ventilation system was moved from the inlet side to the outlet side to provide an induced draft system. Since this ventilation system uses a induced draft fan, the annulus is under a slight negative pressure.

The annulus ventilation system is operated continuously to remove any accumulated condensate. The ventilation air can enter the annulus space through either the outer annulus provided between the primary and outer tank shells or the inner annulus provided between the primary tank shell and central support column liner. All ventilation air is exhausted from the outer annulus to the atmosphere. As with the other tank designs, HEPA filters can be installed at the ventilation system inlet and outlet to prevent the release of radionuclides should primary tank shell leaks be discovered.

Instrumentation

Type III/IIIA tanks are equipped with instruments to monitor temperature, pressure, and liquid levels. These

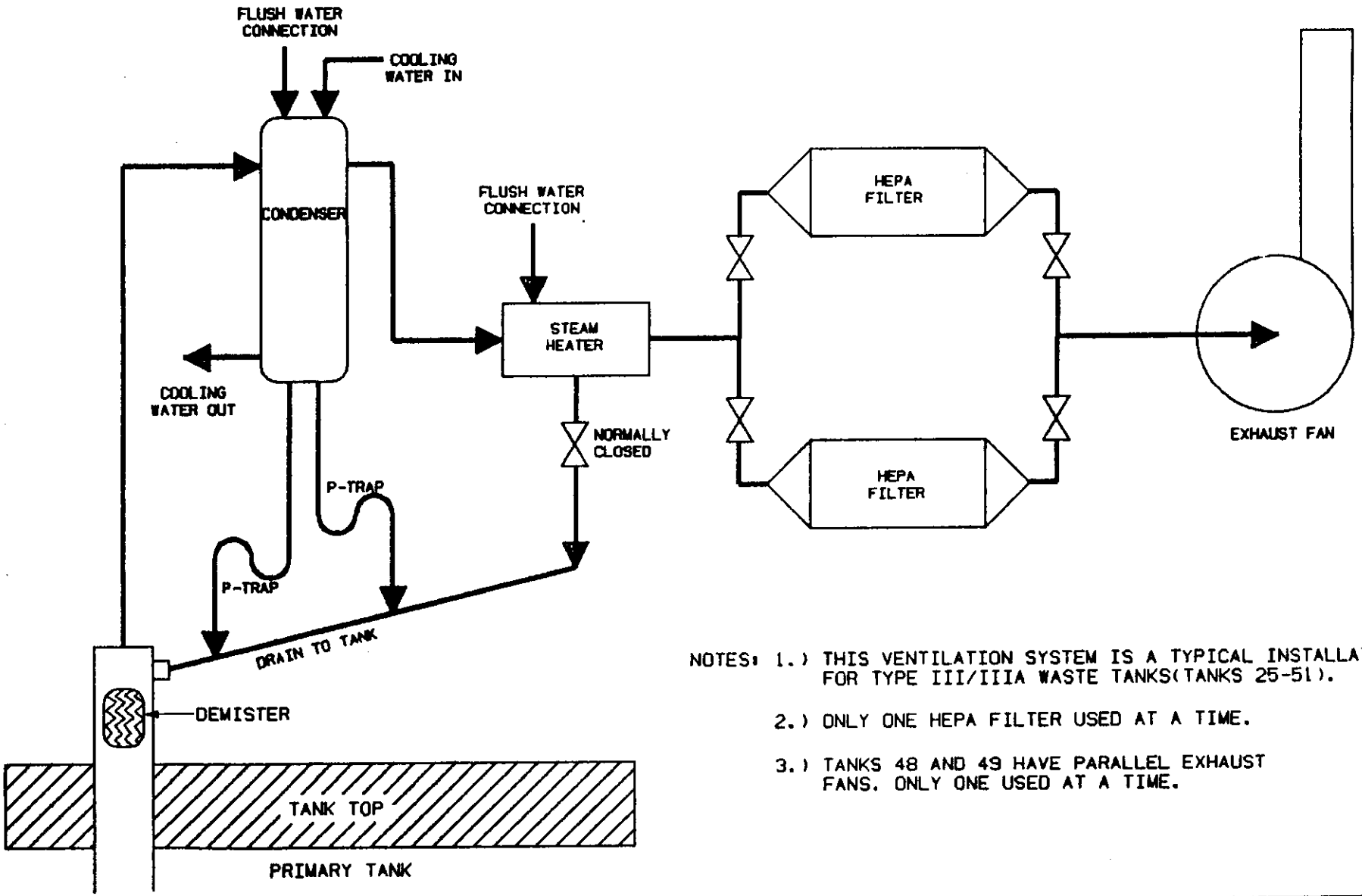

NOTES: 1.) THIS VENTILATION SYSTEM IS A TYPICAL INSTALLATION FOR TYPE III/IIIA WASTE TANKS(TANKS 25-51).

2.) ONLY ONE HEPA FILTER USED AT A TIME.

3.) TANKS 48 AND 49 HAVE PARALLEL EXHAUST FANS. ONLY ONE USED AT A TIME.

CAD NO.	TITLE:		
SE5-2-2006187		FIGURE 7-6 PRIMARY WASTE TANK VENTILATION SYSTEM(TYPE III/IIIA)	NO SCALE 6000-44-3190W

waste tanks specifically contain a reel tape (with four alarm settings), a conductivity probe with a high level alarm, 3 to 4 thermowells within the waste tank, thermocouples on the tank walls and bottom (magnetically attached on the wall of Type III tanks, permanently welded to the Type IIIA tanks, and permanently welded to bottoms of both Types III and IIIA tanks), pressure gauges, radiation monitors (have exhaust gas monitors and area radiation monitors), a continuous combustible gas detector for the tank vapor space, and up to 4 conductivity probes within the annulus space. These instruments are similar to these described for the Type I waste tanks (see Section 7.4.1).

Testing and Construction

Exploratory drilling was conducted prior to construction to determine site suitability. At least one soil boring was drilled at the center of each waste tank location. The concrete foundation pad (capable of supporting a full primary tank) was built on undisturbed earth. A seismic analysis conducted in 1973 concludes that Type III and IIIA waste tank systems can withstand a seismic loading of approximately 0.2g without breaching the primary tank shell or the secondary containment shell (Du Pont, 1975).

Welding procedures were performed in accordance with Section IX of the ASME Boiler and Pressure Vessel Codes. Only full penetration joints were used in tank construction.

All butt welds, except the roof, in the primary tank shell were radiographically inspected. Any defective welds were

repaired and rechecked radiographically. Beginning in 1974, magnetic particle or liquid penetrant techniques were used to examine the areas of the primary tank shell where clips or lifting lugs were removed, and where other excisions were made. Any identified defects were repaired and reinspected. All welds in the bottom assemblies of the primary tank shell (including knuckle rings and lowest course welds) were vacuum leak tested. The leak test procedure was repeated after the stress relieving operation. A hydrostatic test to a depth of 32 feet was conducted for 48 hours.

All butt welds on the secondary tank shell bottom, base knuckle plate, and the lowest course of the center column and outer walls were radiographically inspected. Any defective welds were repaired and rechecked radiographically. All butt welds were vacuum leak tested. Beginning in 1974, magnetic particle or liquid penetrant techniques were used to examine the inside surfaces of the secondary tank shell where clips or lifting lugs were removed, and where other excisions were made. Any identified defects were repaired and reinspected.

All circumferential pipe welds for the removable coil bundles were radiographed. The permanently installed cooling coils were tested hydrostatically to 500 psig and leak tested with an air/soap mixture at 30 psig.

7.4.4 Type IV Waste Tanks

The following section describes the structural design testing and construction, cooling system, ventilation system, and instrumentation for Type IV waste tanks (Tanks

17 to 24). The Type IV waste tank design is shown as Figure 7-7. The specifications for Tanks 17 to 24 are summarized in Tables 7-79 to 7-86, respectively.

Structural Design

Type IV tanks are steel-lined cylindrical tanks with concrete walls, a concrete domed roof, and a dome ring. Type IV tanks have a capacity of 1,300,000 gallons, a diameter of 85 feet, and a fill height of 34-1/4 feet.

Carbon steel plates, 3/8 inch thick, were utilized for the side walls and the floors of the primary tank shell. The knuckle plates at the junction between the tank bottom and sidewalls are 7/16 inch thick and rest on a concrete tank ring. The steel utilized for Tanks 17 to 20 conforms to ASTM A285-54T Grade B (firebox quality) standards, suitable for arc welding. The steel used for Tanks 21 to 24 conforms to ASTM A212-57T Grade B (firebox quality) standards.

Concrete was built up around the steel vessel using the "shotcrete" technique. This technique employs a pneumatic method of applying concrete to a surface by blowing a thick semifluid concrete mixture through a nozzle. The "shotcrete" concrete wall is 11 inches thick and is surrounded by a dense, high-strength concrete wall which enhances the load-bearing capacity of the tank system. The high-strength concrete wall is 4 inches thick and was prestressed by embedding girths of steel under tension which applies a compressive force to the primary tank shell.

TABLE 7-79

TANK 17 (TYPE IV)

DESCRIPTION		SPECIFICATION
Primary Tank Shell		
Dimensions (diameter, height)		85' D X 34'-3" H
Fill Height (maximum)		390 INCHES
Capacity (nominal)		1,300,000 GALLONS
Shell Thickness	Wall:	3/8 INCH
		7/16 INCH LOWER KNUCKLE PLATE
	Top:	7-10 INCHES (DOMED CONCRETE)
	Bottom:	3/8 INCH
Material of Construction	Wall/Bottom:	CARBON STEEL, ASTM A285-54T GRADE B (FIREBOX QUALITY)
	Top:	REINFORCED CONCRETE DOME
Fabrication Standard		1952 ASME BOILER CODE FOR UNFIRED PRESSURE VESSELS, SECTION VIII
Design Temperature (maximum)		210 °F
Design Pressure (maximum specific gravity @ full waste capacity)		1.80
Secondary Containment (Steel Pan)		N/A
Cooling Coils		N/A
Ventilation		
Primary Tank		150 CFM
Annulus		N/A
Pump Installations		
Slurry Pump		3-4 ADDED AS REQUIRED FOR WASTE TRANSFER
Transfer Pumps		1
Jet Pumps		1

TABLE 7-80

TANK 18 (TYPE IV)

DESCRIPTION		SPECIFICATION
Primary Tank Shell		
Dimensions (diameter, height)		85' D X 34'-3" H
Fill Height (maximum)		386 INCHES
Capacity (nominal)		1,300,000 GALLONS
Shell Thickness	Wall:	3/8 INCH 7/16 INCH LOWER KNUCKLE PLATE
	Top:	7-10 INCHES (DOMED CONCRETE)
	Bottom:	3/8 INCH
Material of Construction	Wall/Bottom:	CARBON STEEL, ASTM A285-54T GRADE B (FIREBOX QUALITY)
	Top:	REINFORCED CONCRETE DOME
Fabrication Standard		1952 ASME BOILER CODE FOR UNFIRED PRESSURE VESSELS, SECTION VIII
Design Temperature (maximum)		210 °F
Design Pressure (maximum specific gravity @ full waste capacity)		1.80
Secondary Containment (Steel Pan)		N/A
Cooling Coils		N/A
Ventilation		
Primary Tank		150 CFM
Annulus		N/A
Pump Installations		
Slurry Pumps		3-4 ADDED AS REQUIRED FOR WASTE TRANSFER
Transfer Pumps		1 (TELESCOPIC)

TABLE 7-81

TANK 19 (TYPE IV)

DESCRIPTION		SPECIFICATION
Primary Tank Shell		
Dimensions (diameter, height)		85' D X 34'-3" H
Fill Height (maximum)		386 INCHES
Capacity (nominal)		1,300,000 GALLONS
Shell Thickness	Wall:	3/8 INCH 7/16 INCH LOWER KNUCKLE PLATE
	Top:	7-10 INCHES (DOMED CONCRETE)
	Bottom:	3/8 INCH
Material of Construction	Wall/Bottom:	CARBON STEEL, ASTM A285-54T GRADE B (FIREBOX QUALITY)
	Top:	REINFORCED CONCRETE DOME
Fabrication Standard		1952 ASME BOILER CODE FOR UNFIRED PRESSURE VESSELS, SECTION VIII
Design Temperature (maximum)		210 °F
Design Pressure (maximum specific gravity @ full waste capacity)		1.80
Secondary Containment (Steel Pan)		N/A
Cooling Coils		N/A
Ventilation		
Primary Tank		150 CFM
Annulus		N/A
Pump Installations		
Slurry Pumps		3-4 ADDED AS REQUIRED FOR WASTE TRANSFER
Jet Pumps		1

TABLE 7-82

TANK 20 (TYPE IV)

DESCRIPTION		SPECIFICATION
Primary Tank Shell		
Dimensions (diameter, height)		85' D X 34'-3" H
Fill Height (maximum)		386 INCHES
Capacity (nominal)		1,300,000 GALLONS
Shell Thickness	Wall:	3/8 INCH 7/16 INCH LOWER KNUCKLE PLATE
	Top:	7-10 INCHES (DOMED CONCRETE)
	Bottom:	3/8 INCH
Material of Construction	Wall/Bottom:	CARBON STEEL, ASTM A285-54T GRADE B (FIREBOX QUALITY)
	Top:	REINFORCED CONCRETE DOME
Fabrication Standard		1952 ASME BOILER CODE FOR UNFIRED PRESSURE VESSELS, SECTION VIII
Design Temperature (maximum)		210 ° F
Design Pressure (maximum specific gravity @ full waste capacity)		1.80
Secondary Containment (Steel Pan)		N/A
Cooling Coils		N/A
Ventilation		
Primary Tank		150 CFM
Annulus		N/A
Pump Installations		
Slurry Pumps		3-4 ADDED AS REQUIRED FOR WASTE TRANSFER
Jet Pumps		1

TABLE 7-83

TANK 21 (TYPE IV)

DESCRIPTION		SPECIFICATION
Primary Tank Shell		
Dimensions (diameter, height)		85' D X 34'-3" H
Fill Height (maximum)		382 INCHES
Capacity (nominal)		1,300,000 GALLONS
Shell Thickness	Wall:	3/8 INCH 7/16 INCH LOWER KNUCKLE PLATE
	Top:	7-10 INCHES (DOMED CONCRETE)
	Bottom:	3/8 INCH
Material of Construction	Wall/Bottom:	CARBON STEEL, ASTM A212-57T GRADE B, MINIMUM CARBON 0.18% (FIREBOX QUALITY)
	Top:	REINFORCED CONCRETE DOME
Fabrication Standard		1956 ASME BOILER CODE FOR UNFIRED PRESSURE VESSELS, SECTION VIII
Design Temperature (maximum)		210 ° F
Design Pressure (maximum specific gravity @ full waste capacity)		1.80
Secondary Containment (Steel Pan)		N/A
Cooling Coils		N/A
Ventilation		
Primary Tank		150 CFM
Annulus		N/A
Pump Installations		
Slurry Pumps		3-4 ADDED AS REQUIRED FOR WASTE TRANSFER
Jet Pumps		1

TABLE 7-84

TANK 22 (TYPE IV)

DESCRIPTION		SPECIFICATION
Primary Tank Shell		
Dimensions (diameter, height)		85' D X 34'-3" H
Fill Height (maximum)		382 INCHES
Capacity (nominal)		1,300,000 GALLONS
Shell Thickness	Wall:	3/8 INCH 7/16 INCH LOWER KNUCKLE PLATE
	Top:	7-10 INCHES (DOMED CONCRETE)
	Bottom:	3/8 INCH
Material of Construction	Wall/Bottom:	CARBON STEEL, ASTM A212-57T GRADE B, MINIMUM CARBON 0.18% (FIREBOX QUALITY)
	Top:	REINFORCED CONCRETE DOME
Fabrication Standard		1956 ASME BOILER CODE FOR UNFIRED PRESSURE VESSELS, SECTION VIII
Design Temperature (maximum)		210°F
Design Pressure (maximum specific gravity @ full waste capacity)		1.80
Secondary Containment (Steel Pan)		N/A
Cooling Coils		N/A
Ventilation		
Primary Tank		150 CFM
Annulus		N/A
Pump Installations		
Slurry Pumps		3-4 ADDED AS REQUIRED FOR WASTE TRANSFER
Transfer Pumps		1 (TELESCOPIC)

TABLE 7-85

TANK 23 (TYPE IV)

DESCRIPTION		SPECIFICATION
Primary Tank Shell		
Dimensions (diameter, height)		85' D X 34'-3" H
Fill Height (maximum)		381 INCHES
Capacity (nominal)		1,300,000 GALLONS
Shell Thickness	Wall:	3/8 INCH 7/16 INCH LOWER KNUCKLE PLATE
	Top:	7-10 INCHES (DOMED CONCRETE)
	Bottom:	3/8 INCH
Material of Construction	Wall/Bottom:	CARBON STEEL, ASTM A212-57T GRADE B, MINIMUM CARBON 0.18% (FIREBOX QUALITY)
	Top:	REINFORCED CONCRETE DOME
Fabrication Standard		1956 ASME BOILER CODE FOR UNFIRED PRESSURE VESSELS, SECTION VIII
Design Temperature (maximum)		210 ° F
Design Pressure (maximum specific gravity @ full waste capacity)		1.80
Secondary Containment (Steel Pan)		N/A
Cooling Coils		N/A
Ventilation		
Primary Tank		150 CFM
Annulus		N/A
Pump Installations		
Slurry Pumps		3-4 ADDED AS REQUIRED FOR WASTE TRANSFER
Jet Pumps		1

TABLE 7-86

TANK 24 (TYPE IV)

DESCRIPTION		SPECIFICATION
Primary Tank Shell		
Dimensions (diameter, height)		85' D X 34'-3" H
Fill Height (maximum)		381 INCHES
Capacity (nominal)		1,300,000 GALLONS
Shell Thickness	Wall:	3/8 INCH
		7/16 INCH LOWER KNUCKLE PLATE
	Top:	7-10 INCHES (DOMED CONCRETE)
	Bottom:	3/8 INCH
Material of Construction	Wall/Bottom:	CARBON STEEL, ASTM A212-57T GRADE B, MINIMUM CARBON 0.18% (FIREBOX QUALITY)
	Top:	REINFORCED CONCRETE DOME
Fabrication Standard		1956 ASME BOILER CODE FOR UNFIRED PRESSURE VESSELS, SECTION VIII
Design Temperature (maximum)		210°F
Design Pressure (maximum specific gravity @ full waste capacity)		1.80
Secondary Containment (Steel Pan)		N/A
Cooling Coils		N/A
Ventilation		
Primary Tank		150 CFM
Annulus		N/A
Pump Installations		
Slurry Pumps		3-4 ADDED AS REQUIRED FOR WASTE TRANSFER
Jet Pumps		1

The domed roofs contain above grade riser openings for the installation of instruments and waste transfer equipment. Although the dome itself is not lined, the riser openings are lined with 1/4-inch steel plates. The 7-inch thick domed roof is covered with at least 32 inches of earth for radiation shielding.

Transfer lines enter and exit the tank through either the tank shell near the tank top or a riser in the concrete roof.

Cooling System

Type IV tanks do not have an auxiliary cooling system.

Ventilation

The ventilation system for the Type IV waste tanks is illustrated in Figure 7-8. The Type IV tanks are maintained under a slight negative pressure by a ventilation system. Most of the Type IV tanks are currently connected in pairs to allow the use of a single exhaust system for each tank pair. Tank 17 is paired with Tank 19 and Tank 18 is paired with 20. Tank pairs are joined by a 6-inch carbon steel vent line connected below grade. Vent line valves can be temporarily closed to isolate individual tanks during waste removal operations. The primary tank shell ventilation system for each pair of tanks is identical to Type I tanks.

Tanks 21, 22, 23 and 24 have separate ventilation systems. However, Tank 21 is interconnected with Tank 22. These interconnections are normally shut-off by a closed valve

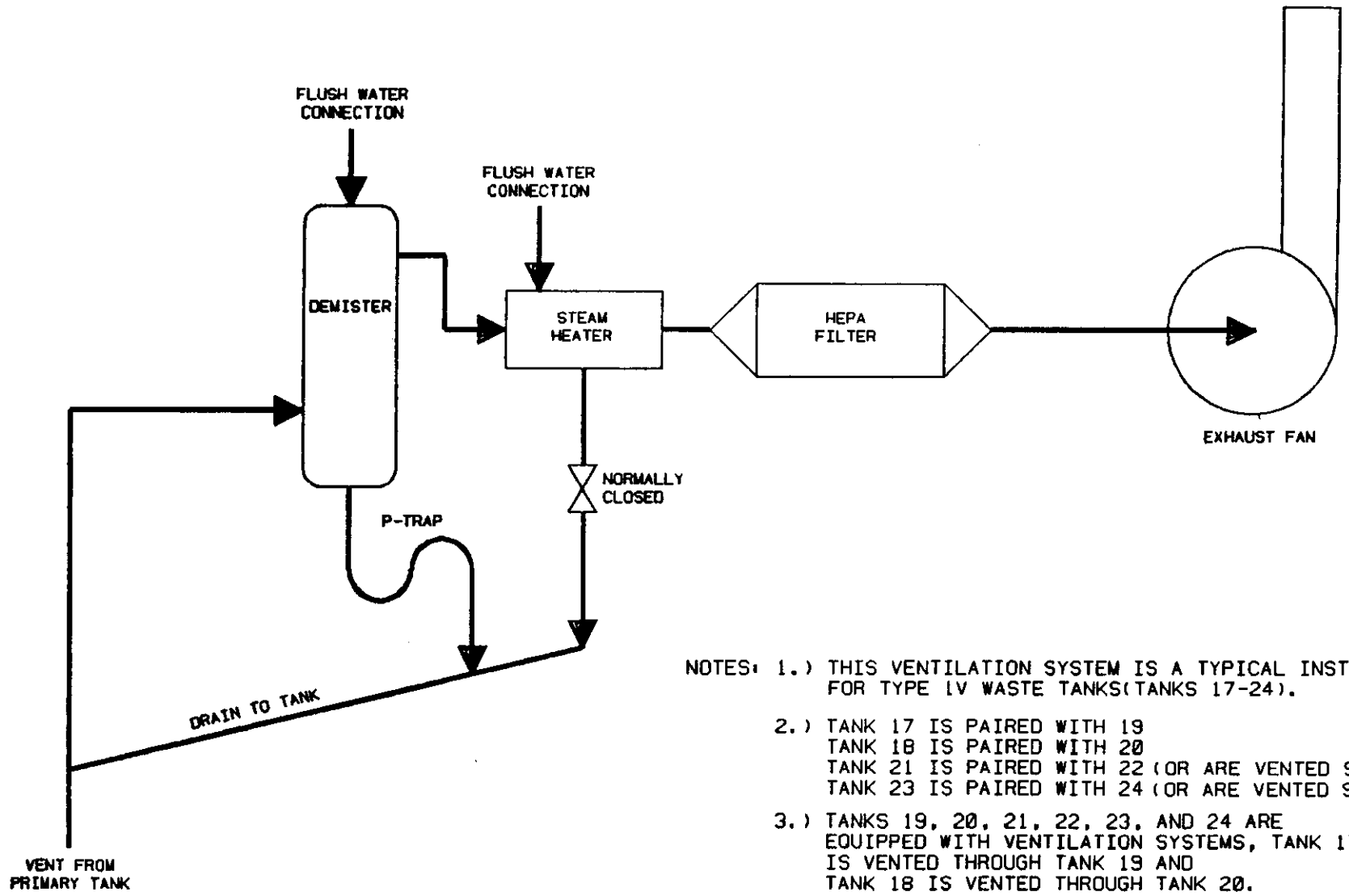

NOTES: 1.) THIS VENTILATION SYSTEM IS A TYPICAL INSTALLATION FOR TYPE IV WASTE TANKS(TANKS 17-24).

2.) TANK 17 IS PAIRED WITH 19
TANK 18 IS PAIRED WITH 20
TANK 21 IS PAIRED WITH 22 (OR ARE VENTED SEPARATELY)
TANK 23 IS PAIRED WITH 24 (OR ARE VENTED SEPARATELY)

3.) TANKS 19, 20, 21, 22, 23, AND 24 ARE EQUIPPED WITH VENTILATION SYSTEMS, TANK 17 IS VENTED THROUGH TANK 19 AND TANK 18 IS VENTED THROUGH TANK 20.

CAD NO.	TITLE:	NO SCALE
SE5-2-2006187	FIGURE 7-8 PRIMARY WASTE TANK VENTILATION SYSTEM(TYPE IV)	6000-44-3190W

thereby allowing each tank to be vented independently. If necessary, the valves can be opened to allow the tank pairs to vent through a single system.

The ventilation systems are modified periodically to accommodate waste removal operations. Portable ventilation systems are used when required. Portable ventilation systems will also be temporarily erected for other waste tank Types to accommodate process operations.

Type IV tanks do not have an annulus ventilation system.

Instrumentation

Type IV tanks are equipped with instruments to monitor temperature, pressure, and liquid levels. Type IV waste tanks do not normally have exhaust radiation and combustible gas monitors since these tanks only contain LHW. However, Tank 22 has been equipped with a combustible gas monitor because of its use in the ITP process. Type IV tanks also do not have annulus instrumentation. Normally, only one thermowell with up to two thermocouples is installed within these waste tanks. The instruments which are installed for these waste tanks are similar to those described for Type I tanks except they have no annulus instruments or cooling water instruments (see Section 7.4.1).

Construction and Testing

Exploratory drilling was conducted prior to construction to determine site suitability. At least one soil boring was drilled at the center of each waste tank location.

The concrete foundation pad (capable of supporting a full primary tank) was built on undisturbed earth. A seismic analysis conducted in 1973 concludes that Type IV waste tank systems can withstand a seismic loading of approximately 0.2g without breaching to primary tank shell (Du Pont, 1975).

The tank shells for tanks 17-22 were fabricated according to Section VIII of the 1952 ASME Boiler Code for Unfired Pressure Vessels. The tank shells for tanks 21-24 were fabricated according to Section VIII of the 1956 ASME Boiler Code for Unfired Pressure Vessels.

All welds in the primary tank shell were radiographically checked. The tank bottom and base knuckle plate welds were vacuum leak tested. The tank was hydrostatically tested to the nominal fill line upon completion of the tank until it was placed into service.

7.5 Process Piping

The F and H-Area HLW Tank Farm piping has been designed and constructed in accordance with the requirements specified by the Chemical Plant and Petroleum Refinery Piping Code, ANSI/ASME B31.3. This code includes:

- References to acceptable material specifications and component standards.
- Requirements for design of components and assemblies.
- Requirements and data for evaluation and limitation of stresses, reactions and movement associated with pressure and temperature changes.
- Guidance and limitations for the selection and application of materials and components.

- Requirements for the fabrication, assembly, and erection of piping.

- Requirements for examination, inspection, and testing.

Within the guidelines of this Code, suitable materials for the piping systems have been selected based on the review of many design alternatives. The general considerations evaluated include but are not limited to:

- The possibility of exposure of the piping to fire and the melting point, degradation temperature, loss of strength at elevated temperature, and combustibility of the piping material under such exposure;

- The susceptibility of the piping material to resist corrosion crevicing under backing rings, in threaded joints, in socket welded joints, and in other stagnant, confined areas;

- The possibility of adverse electrolytic effects if the metal is subject to contact with a dissimilar metal;

- The compatibility of lubricants or sealants used on threads with the fluid handled;

- The compatibility of materials, such as cements, solvents, solders, and brazing materials, with the fluid service; and

- The resistance to deterioration of the piping material during service (i.e., corrosion, erosion).

Utilizing good engineering judgement and accepted industrial practice, piping materials were chosen from the Material Specification, published by the American Society for Testing and Materials Standards (ASTM). A summary of the materials selected for the primary piping system is provided in the following sections. Over the years that the tank farms have been in operation, various pipe types have been used. Piping differs due to various requirements for particular uses. Piping materials also differ because of technology changes and material availability changes with respect to time.

Stainless Steel - (SRS Pipe Code P48)

Waste transfer piping between the various tanks and facilities within the tank farms is constructed primarily from 304L stainless steel which has the following specifications:

- Schedule 10S
-

NPS Pipe Diameter	Specification
1-4 inches	Grade TP 304L welded stainless steel pipe per SW41M.
6-8 inches	Grade TP 304L welded stainless steel pipe per ASTM A312 and ultrasonically tested per SW41M.

All pipe sizes are to be corrosion evaluated per SRS Site Specification 4498 and tested by the air under water pressure test described in supplementary requirement S2 of ASTM A269.

- Allowance for corrosion and erosion: 0.05 inch.
- Basis for stresses: ANSI/ASME B31.3.
- Design Pressure: 150 psig
- Design Temperature: 370°F
- Maximum Test Pressure: 315 psig.
- Maximum Differential Pressure (ext-int): 15 psi

Stainless Steel - (SRS Pipe Code P112)

A second type of 304L stainless steel is occasionally utilized in the ITP process for service where pressure and temperature requirements are above the average conditions.

- Schedule 10S
- NPS Pipe Diameter — Specifications

NPS Pipe Diameter	Specifications
1/2-4 inches	Type 304L or 304 welded stainless steel pipe to SW41M or ASTM A312.
6-24 inches	Type 304L or 304 welded stainless steel pipe to ASTM A312.

- Allowance for corrosion and erosion: 0.00 inch.
- Basis for stresses: ANSI/ASME B31.3
- Design Pressure: 160 psig
- Design Temperature: 375°F.
- Maximum Test Pressure: 240 psig
- Minimum Temperature: -20°F.

Stainless Steel - (SRS Pipe Code P52)

A third type of 304L stainless steel is installed throughout the evaporator systems which require a higher pressure rating.

- Schedule 40S
- NPS Pipe Diameter — Specifications

NPS Pipe Diameter	Specifications
1/2 - 4 inches	Type 304 L welded stainless steel pipe to SW41M or ASTM A-312.

- Allowance for corrosion and erosion: 0.00 inch
- Basis for stresses: ANSI B31.3
- Design Pressure: 860 psig
- Design Temperature: 370°F
- Maximum Test Pressure: 1200 psig

Stainless Steel - (SRS Pipe Code P53)

A fourth type of 304L stainless steel which was installed where a high pressure rating is required meets the following requirements:

- Schedule 10S
-

NPS Pipe Diameter	Specifications
1/2 - 4 inches	Type 304L welded stainless steel pipe to SW41M.
6 - 12 inches	Type 304L welded stainless steel pipe to ASTM 312.

All pipe sizes are to be corrosion evaluated per SRS Site Specification 4498.

- Allowance for corrosion and erosion: 0.00 inch
- Basis for stresses: ANSI/ASME B31.3
- Design Pressure: 190 psig
- Design Temperature: 370°F
- Maximum Test Pressure: 320 psig

Stainless Steel - (SRS Pipe Code P224A)

Another type of 304L stainless steel is installed between the H- and S-Ares.

- Schedule 40S
-

NPS Pipe Diameter	Specification
1/2 - 8 inches	Grade TP 304L seamless stainless steel pipe per ASTM A312.

All pipe sizes are to be corrosion evaluated per SRS Site Specification 4498.

- Allowance for corrosion and erosion: 0.05 inch
- Basis for stresses: ANSI/ASME B31.3
- Design Pressure: 250 psig
- Design Temperature: 275°F
- Maximum Test Pressure: 375 psig

Carbon Steel - (SRS Pipe Code P60)

Carbon steel piping is used for wash water and process water transfer.

NPS Pipe Diameter	Schedule	Specification
1/2-2 inches	80	ASTM Specification ASTM A106 Seamless carbon steel Grade B.
3-10 inch	40	ASTM A53 seamless carbon steel Grade B or API 5L seamless Grade B.

- Allowance for corrosion and erosion: 0.10 inch
- Basis for Stresses: ANSI/ASME B31.3
- Design Pressure: 150 psig
- Design Temperature: 150°F
- Minimum Temperature: -20°F
- Maximum Test Pressure: 225 psig

7.6 Pumps

The F and H-Area HLW Tank Farms contain pumps to transfer waste between various places. These pumps are located within the evaporator systems, the ITP filtration building, the pump pits and the waste tanks. For the purpose of this permit application, the

pump locations are designated as either a dedicated or general service pump. This specification section is divided to address each designation separately.

7.6.1 Dedicated Service Transfer Pumps

Dedicated service transfer pumps are those pumps which are used for a specific purpose to transfer waste to a limited number of locations. These pumps are associated with the evaporator systems and the ITP filtration process. These pumps include in-line process pumps, feed pumps, and hold tank transfer pumps. In general, two identical pumps are provided at each in-line process pump location. These pumps are place in parallel to provide backup in the event of primary pump failure. In the case of dedicated feed and transfer pumps located in a waste tank, normally only one pump is provided.

Each of these pumps are described in the subsections that follow. The summary specifications provided for the dedicated service transfer pumps are the minimum requirements for these pumps. As discussed in Section 4.2, the replacement of these pumps is considered part of normal operations. The replacement pumps will meet or exceed the minimum requirements identified for the particular pump location.

7.6.1.1 Evaporator Systems

As described in Section 4.4, the evaporator systems consist of feed pumps, CRC pumps, overheads hold tank transfer pumps, and CTS pumps. The process flow diagram for these pumps is shown in Figures 4-2 and

4-3. A description for each of these pumps for each evaporator system is provided below.

242-F Evaporator System

Feed Pump - The feed pump for the 242-F evaporator system is located in Tank 26 (riser R1) as shown on Figure 4-24. The pump is a vertical, long shaft, centrifugal, wet-pit type pump. The specifications for this pump location are as follows:

Motor Rating:	3500 RPM/20 HP
Pump Curve:	See Appendix A
Impeller Diameter:	6.75"
Pump Rating:	180' TDH @ 60 GPM
Maximum Flow:	120 GPM
Construction Materials:	Carbon Steel/Cast Iron

CRC Pump - The CRC pump for the 242-F evaporator system is a horizontal, centrifugal pump. Two identical pumps are installed in parallel at this location to provide backup in case of primary pump failure. The specifications for this pump location are as follows:

Motor Rating:	3450 RPM/1.5 HP
Pump Curve:	See Appendix A
Impeller Diameter:	6.75"
Pump Rating:	170' TDH @ 50 GPM
Maximum Flow:	120 GPM

Hold Tank Transfer Pump - The hold tank transfer pump for the 242-F evaporator system is a horizontal, centrifugal pump. Two identical pumps are installed in parallel at this location to provide backup in case of primary pump failure. The specifications for this pump location are as follows:

Motor Rating:	1760 RPM/3HP
Pump Curve:	See Appendix A
Impeller Diameter:	6.00"
Pump Rating:	20' TDH @ 35 GPM

CTS Pumps - The 242-F evaporator system has a CTS pump pit to transfer the evaporator bottoms to a waste concentrate receipt tank. Two pumps are installed in the CTS pump tank; a drawoff pump and a recirculation pump. Both of these pumps are identical and have the following specifications:

Motor Rating:	1800 RPM/15 HP
Pump Curve:	See Appendix A
Impeller Diameter:	9.625"
Pump Rating:	100' TDH @ 100 GPM
Maximum Flow:	250 GPM
Construction Materials:	304L STAINLESS STEEL

<u>242-H Evaporator System</u>

Feed Pump - The feed pump for the 242-H evaporator system is located in Tank 13 as shown on Figure 4-25. The pump is a vertical, long shaft, centrifugal, wet-pit type pump. The specifications for this pump location are as follows:

Motor Rating:	3500 RPM/20 HP
Pump Curve:	See Appendix A
Impeller Diameter:	6.75"
Pump Rating:	180' TDH @ 60 GPM
Maximum Flow:	120 GPM
Construction Materials:	Carbon Steel/Cast Iron

CRC Pump - The CRC pump for the 242-H evaporator system is a variable speed, horizontal, centrifugal pump. Two identical pumps are installed in parallel at this location to provide backup in case of primary pump failure. The specifications this pump location are as follows:

Motor Rating:	3450 RPM/1.5 HP
Pump Curve:	See Appendix A
Impeller Diameter:	6.75"
Pump Rating:	170 TDH @ 500 GPM
Maximum Flow:	120 GPM

Hold Tank Transfer Pump - The overheads from the 242-H hold tanks are gravity drained to the F/H ETF.

CTS Pumps - The 242-H evaporator system has a CTS pump pit to transfer the evaporator bottoms to a waste concentrate receipt tank. Two pumps are installed in the CTS pump tank; a drawoff pump and a

recirculation pump. Both of these pumps are identical and have the following specifications:

Motor Rating:	1800 RPM/15 HP
Pump Curve:	See Appendix A
Impeller Diameter:	9.625"
Pump Rating:	100' TDH @ 100 GPM
Maximum Flow:	250 GPM
Construction Materials:	304L STAINLESS STEEL

<u>242-16F Evaporator System</u>

Feed Pump - The feed pump for the 242-16F evaporator system is located in Tank 26 (riser R2) as shown on Figure 4-24. The pump is a vertical, long shaft, centrifugal, wet-pit type pump. The specifications for this pump location are as follows:

Motor Rating:	3500 RPM/20 HP
Pump Curve:	See Appendix A
Impeller Diameter:	6.75"
Pump Rating:	180' TDH @ 60 GPM
Maximum Flow:	120 GPM
Construction Materials:	Carbon Steel/Cast Iron

CRC Pump - The CRC pump for the 242-16F evaporator system is a horizontal, centrifugal pump. Two identical pumps are installed in parallel at this location to provide backup in case of primary pump failure. The specifications for this pump location are as follows:

Motor Rating:	3450 RPM/1 HP
Pump Curve:	See Appendix A
Impeller Diameter:	4.625"
Pump Rating:	50' TDH @ 50 GPM

Hold Tank Transfer Pump - The hold tank transfer pump for the 242-16F evaporator system is a horizontal, centrifugal pump. Two identical pumps are installed in parallel at this location to provide backup in case of primary pump failure. The specifications for this pump location are as follows:

Motor Rating:	3500 RPM/15 HP
Pump Curve:	See Appendix A
Impeller Diameter:	7.25"
Pump Rating:	240' TDH @ 40 GPM

242-16H Evaporator System

Feed Pump - The feed pump for the 242-16H evaporator system is located in Tank 43 (riser R) as shown on Figure 4-25. The pump is a vertical, long shaft, centrifugal, wet-pit type pump. The specifications for this pump location are as follows:

Motor Rating:	3500 RPM/20 HP
Pump Curve:	See Appendix A
Impeller Diameter:	6.75"
Pump Rating:	180' TDH @ 60 GPM
Maximum Flow:	120 GPM
Construction Materials:	Carbon Steel/Cast Iron

CRC Pump - The CRC pump for the 242-16H evaporator system is a horizontal, centrifugal pump. Two identical pumps are installed in parallel at this location to provide backup in case of primary pump failure. The specifications for this pump location are as follows:

Motor Rating:	3450 RPM
Pump Curve:	See Appendix A
Impeller Diameter:	4.625"
Pump Rating:	50' TDH @ 50 GPM

Hold Tank Transfer Pump - The hold tank transfer pump for the 242-16H evaporator system is a horizontal, centrifugal pump. Two identical pumps are installed in parallel at this location to provide backup in case of primary pump failure. The specifications for this pump location are as follows:

Motor Rating:	3500 RPM/2.25 HP
Pump Curve:	See Appendix A
Impeller Diameter:	4.125"
Pump Rating:	75' TDH @ 40 GPM

242-25H Evaporator System (Replacement Evaporator)

Feed Pump - The feed pump for the 242-25H evaporator system will be located in Tank 32 as shown on Figure 4-25. The pump is a vertical, long shaft, centrifugal, wet-pit type pump. The specifications for the pump to be installed at this location are as follows:

Motor Rating:	1750 RPM/10HP
Pump Rating:	40 GPM @ 90' TDH
Construction Materials:	304L Stainless Steel

Hold Tank Transfer Pump - The hold tank transfer pump for the 242-25H evaporator system will be a horizontal, centrifugal pump. Two identical pumps will be installed in parallel at this location to provide backup in case of primary pump failure. This pump has not yet been specified.

7.6.1.2 ITP Filtration

Precipitate Reaction Stripper Column Pumps - Two transfer pumps are installed after the precipitate reaction stripper column to transfer the filtrate to the filtrate hold tanks. A portion or all of the filtrate may also be diverted back to the stripper column from these pumps. The two pumps are identical and are installed in parallel to provide backup in case of primary pump failure. The two pumps are horizontal, centrifugal type pumps with the following specifications:

Motor Rating:	1750 RPM/7.5 HP
Pump Curve:	See Appendix A
Impeller Diameter:	9.25"
Maximum Flow:	125 GPM @ 80' TDH
Construction Materials:	316 Stainless Steel

Precipitate Washing Stripper Column Pumps - Two transfer pumps are installed after the precipitate washing stripper column to transfer the spent wash water to the filtrate hold tanks. A portion or all of the filtrate can be recycled back to the stripper column by these pumps. The two pumps are horizontal, centrifugal type pumps which are installed in the parallel to provide backup in case of primary pump failure. The two pumps have the following specifications:

Motor Rating:	1750 RPM/7.5 HP
Pump Curve:	See Appendix A
Impeller Diameter:	8 1/8"
Pump Rating:	40 GPM/78.5' TDH/1800 RPM
Construction Materials:	316 Stainless Steel

Filtrate Hold Tank Pumps - There are two pumps which transfer filtrate from the filtrate hold tanks to Tank 22 (spent wash water), Tank 48 (rejected filtrate), or Tank 50 (decontaminated salt solution). These pumps are identical and are in parallel to provide backup in case of primary pump failure. The filtrate hold tank pumps are horizontal, centrifugal type pumps with the following specifications:

Motor Rating:	2930 RPM/15 HP
Pump Curve:	See Appendix A
Impeller Diameter:	7"
Pump Rating:	200 GPM/170' TDH/3500 RPM
Construction Materials:	316 Stainless Steel

7.6.2 General Service Transfer Pumps

The F and H-Area HLW Tank Farms contain mechanical pumps and jet pumps to transfer waste between tanks, between tanks and process facilities, through process facilities, and between the Tank Farms and SRS integrated treatment facilities. The transfer pump may either be dedicated to a particular service or may be used to transfer a variety of waste types to various locations. The specifications provided for the general service pumps are provided in the sections that follow.

The information provided in the following sections and Appendix A is for the transfer pumps which are currently being used. These pumps may be replaced periodically with different pumps. General service pumps will be replaced with equivalent equipment for continued service. Should a new or modified transfer route be required to accommodate waste processing operations, a new or existing pump with different specifications may be installed at a general service pump location (e.g., pump pit or waste tank). As described in Section 4.2, the replacement of transfer pumps is considered part of normal operations.

7.6.2.1 Pump Pits

Hydraulic pumps and jet pumps are used in the pump pits for intertank and interarea transfers. The hydraulic pumps are vertical units which have permanently lubricated grease-packed ball bearings. Table 7-87 presents summary specifications for the hydraulic and jet pumps within the pump pits. The specifications for the pump pit tanks are provided in Section 7.7.

7.6.2.2 Waste Tank Transfer Pumps

Each waste tank is equipped with either a mechanical or jet pump to transfer waste out of the waste tank. Mechanical pumps within the waste tanks are normally used as process feed pumps (e.g., evaporator systems, ITP filter feed, and sludge processing), for sludge or salt cake removal, and for general waste transfers. Jet pumps are normally used to transfer waste between tanks, remove liquids from containment sumps, and for non-routine transfer operations. The specifications for the typical mechanical and jet pumps installed within the waste tanks are provided below.

<u>Mechanical Pumps</u>

Long-shaft transfer pumps are installed within one of the riser of a waste tank. Two types of long-shaft transfer pumps are currently utilized at the Tank Farms. These pumps include the standard Telescoping

TABLE 7-87
PUMP PIT PUMP SPECIFICATIONS

PUMP LOCATION	MOTOR RATING	IMPELLER DIAMETER	APPROXIMATE PUMP RATING [GPM @ HEAD (FT H 0)]	MAXIMUM FLOW	CONSTRUCTION MATERIALS
F-AREA HLW TANK FARM					
FPP1					
Transfer pump (Two speed)	75 HP	15"	100 GPM @ 350 FT. 100 GPM @ 520 FT.	120 GPM	304L Stainless
FPP2 & FPP3	15 HP	8.25"	100 GPM @ 60 FT.	215 GPM	304L Stainless
Transfer pump	NA	NA	75 GPM @ 48 FT.	90 GPM	304L Stainless
Jet pump					
H-AREA HLW TANK FARM					
HPP1	Not used				
HPP2, HPP3 & HPP4					
Transfer pump	25 HP	11.375"	75 GPM @ 150 FT.	275 GPM	304L Stainless
Jet pump	NA	NA	75 GPM @ 48 FT.	90 GPM	304L Stainless
HPP5 & HPP6					
Transfer pump	25 HP	10.875"	100 GPM @ 120 FT.	275 GPM	304L Stainless
Jet pump	NA	NA	75 GPM @ 48 FT.	90 GPM	304L Stainless
HPP7, HPP8, HPP9 & HPP10					
Transfer pump (variable speed)	100 HP	12"	100 GPM @ 190 FT. @ 2000 RPM	120 GPM	304L Stainless
Jet pump	NA	NA	75 GPM @ 48 FT.	90 GPM	304L Stainless
H/S IAL					
APP1, APP2, APP3					
Transfer pump (variable speed)	100 HP	12"	100 GPM @ 190 FT. @ 2000 RPM	120 GPM	304L Stainless
Jet pump	NA	NA	75 GPM @ 48 FT.	90 GPM	304L Stainless
LPPP1, LPPP2 & LPPP3					
Transfer pump (variable speed)	100 HP	12"	100 GPM @ 190 FT. @ 2000 RPM	120 GPM	304L Stainless
Jet pump	NA	NA	75 GPM @ 48 FT.	90 GPM	304L Stainless

Notes:
Rates vary considerably as waste temperature, sp.gr., and suction lift (or submergence) vary. Data given for 1.25 sp.gr., 35 C, and zero suction lift.

Pump curve shown in Appendix A.

Transfer Pump (TTP) and the Low-Shear Transfer Pump. Table 7-88 lists the utilization of these mechanical pumps which are further described below. Typical Long-Shaft Transfer Pump Specifications are shown in Table 7-89.

- **Telescoping Transfer Pumps (TTP's)** are used in conjunction with slurry pumps for sludge removal operations. These pumps may also be used during salt cake removal operations; current plans are to use jet pumps. TTP's are also installed within the sludge processing tanks (Tanks 40, 42, and 51) and ITP processing tanks (Tanks 48 and 49) to transfer sludge and precipitate slurries from these tanks. Figure 7-9 provides a sketch for a typical TTP.

- TTPs are installed within a tank riser and are designed to be telescoping. The 45 foot long column consists of nine 5-foot flanged sections. A shaft runs down the center of the column and is supported by carbon bushings at each flange. The column is filled with inhibited water to lubricate the bushings. A mechanical seal just above the impeller casing prevents water leakage into the tank, and a positive pressure prevents waste from backing up into the pump column. The motor remains above the tank top while the impeller and volute are submerged in the tank contents (no priming required). The pumps are designed to be raised or lowered by adding or removing sections from the pump column, or by raising or lowering the entire pump assembly. For the latter telescoping method, a support structure is added to the tank top at the transfer pump riser locations since the motor and pump column can extend up to about 30 feet above the tank top when the pump is at its highest elevation within the waste tank. The desired location of the pump intake depends upon the depth of the tank contents.

- **Low-Shear Transfer Pumps** are used for the ITP filter feed operations (Tank 48). These pumps are larger in size than the standard telescoping transfer pumps and require a larger diameter tank riser. The volutes and impellers are designed to minimize shear effects on the precipitate slurry.

TABLE 7-88

LONG-SHAFT TRANSFER PUMP UTILIZATION[a]

LONG-SHAFT TRANSFER PUMP UTILIZATION[a]

Type of Operation	Telescoping Transfer Pump	Low-Shear Transfer Pump
Sludge Removal		
Transfer pumps will be added to waste tanks as required.		
Salt Removal		
Transfer pumps will be added to waste tanks as required.		
Sludge Processing		
Tank 40	2	
Tank 42	1	
Tank 51	2	
ITP Processing		
Tank 48	1	2
Tank 49	2	

NOTES:

[a] The pump utilization information provided is for current conditions. Transfer pumps may be added or removed to meet operational demands.

TABLE 7-89

TYPICAL LONG-SHAFT TRANSFER PUMP SPECIFICATIONS

	Telescoping[a]	Low Shear
Manufacturer	Barrett-Haentjens	Barrett-Haentjens
Capacity [GPM @ Head (FT H_2O)]	80-100 @ 45'-215'	300-500 @ 80'-230'
Speed-Variable (RPM)	2250 maximum	1160 maximum
Motor (HP)	75 - 200	150
Volute Diameter (inches)	22-5/8	46
Shaft Diameter (inches)	3	3
Impeller Diameter (inches)	11-1/4	28
Column Diameter (inches)	10	18
Discharge Diameter (inches)	2-1/2	6

Notes:

[a] Telescoping Transfer Pumps for Tanks 48 and 49 have slightly different flow and head requirements, affecting motor HP & speed.

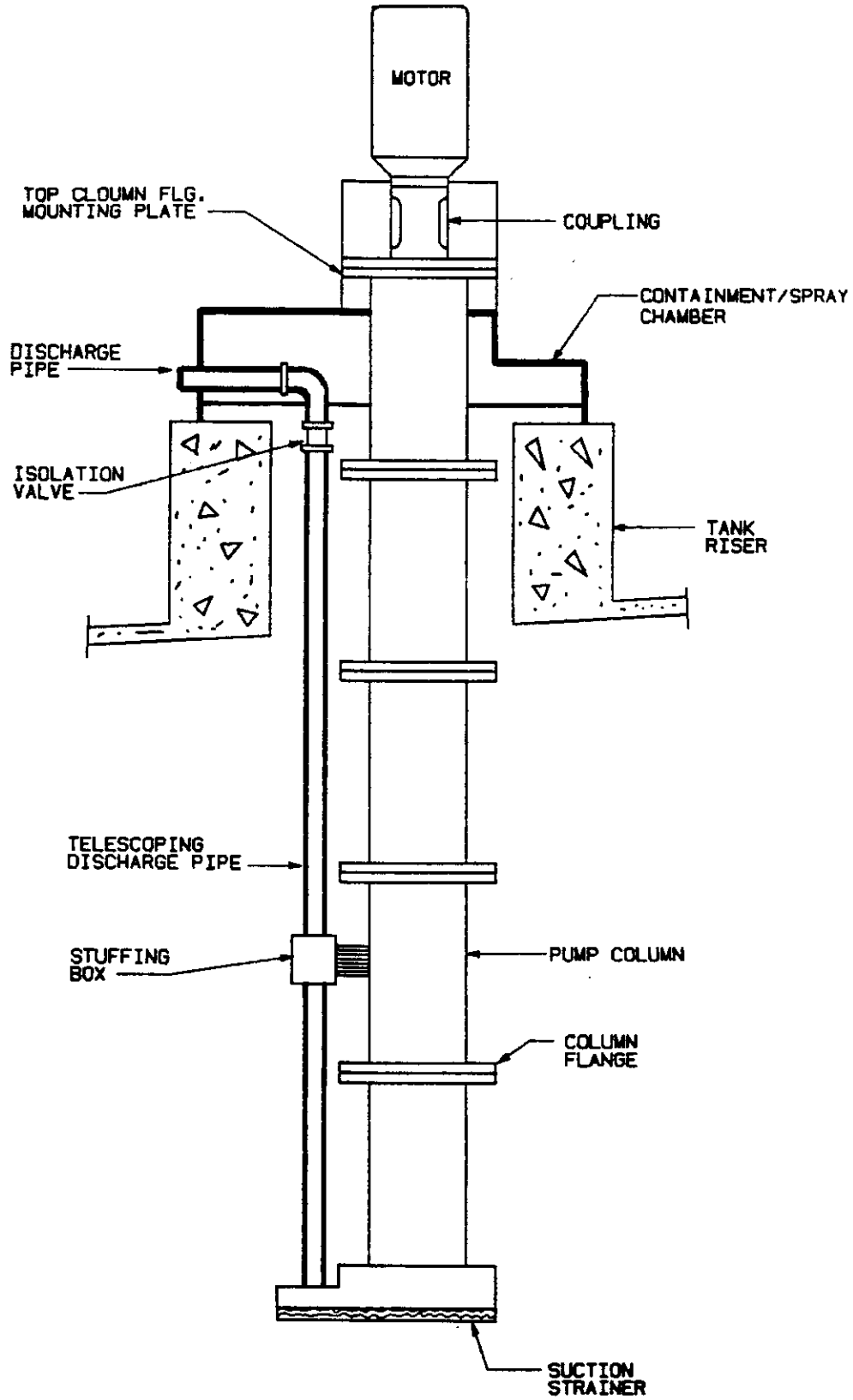

CAD NO.	FIGURE 7-9	NO SCALE
SE5-2-2006188	TYPICAL TELESCOPING TRANSFER PUMP	6000-44-3190W

The specifications for these waste tank transfer pumps are summarized in Table 7-89. Other equivalent transfer pumps may be used (see Section 4.2). The specifications for the evaporator feed pumps currently located in Tanks 13, 26 and 43, and the feed pump to be installed in Tank 32 were previously provided in Section 7.6.1.1.

Jet Pumps

Jet pumps are normally used to transfer liquids from one tank to another and for emptying a secondary containment sump. These pumps operate by expanding pressurized steam through a venturi type assembly. The expanding steam creates a pressure differential which is used to transfer the liquid waste.

The efficiency and total dynamic head for the jet pumps are low. The use of steam also adds some water to the waste and raises the waste temperature. These low pump efficiencies, dilution, and temperature effects do not hamper the transfer operations conducted at the Tank Farms. The jet pumps are used because of their reliability (no moving parts) and low maintenance.

The jet pumps are fabricated at SRS and include both a telescoping and fixed type installation. The telescoping jet pumps, also called a telescoping transfer jet (TTJ), are normally installed within the waste tanks to decant the liquid waste and as a secondary method to empty a waste tank. Jet pumps are also fabricated for fixed type installations such as containment sumps and pump pits. The jet pumps are normally fabricated from 304L stainless steel. The jet pumps operate using 150 psig steam and have an approximate capacity of 30 to 90 gallons per minute. The pump rate varies considerably with the waste

temperature, specific gravity and suction lift (sumergence of the jet pump intake).

Since jet pumps do not have a pump shaft, pump column sections do not need to be added/removed to raise/lower the TTJ pump intake. The TTJ is normally rigidly afixed to tank riser. The intake of the TTJ is raised or lower either by the use of two different methods. The first method utilizes three pipes each with a different diameter to allow the pipes to slide over each other. A threaded shaft connected to a gear/handwheel assembly at the waste tank top is used to raise and lower the intake of the jet pump. Figure 7-10 provides a sketch for this type of TTJ. The other telescoping method utilizes a flexible hose connected to the intake of a fixed jet pump installation. The flexible hose is equipped with screened intake which is suspended from a cable. The cable is also attached to a winch which is used to raise and lower the intake assembly. Figure 7-11 provides a sketch for this type of TTJ.

7.6.3 Slurry Pumps

Long-shaft slurry pumps are used during waste removal operations to mix/suspend tank sludges and to dissolve the accumulated salt cakes. Slurry pumps are also installed in the ITP processing tanks (48 and 49) and the sludge processing tanks (40, 42 and 51).

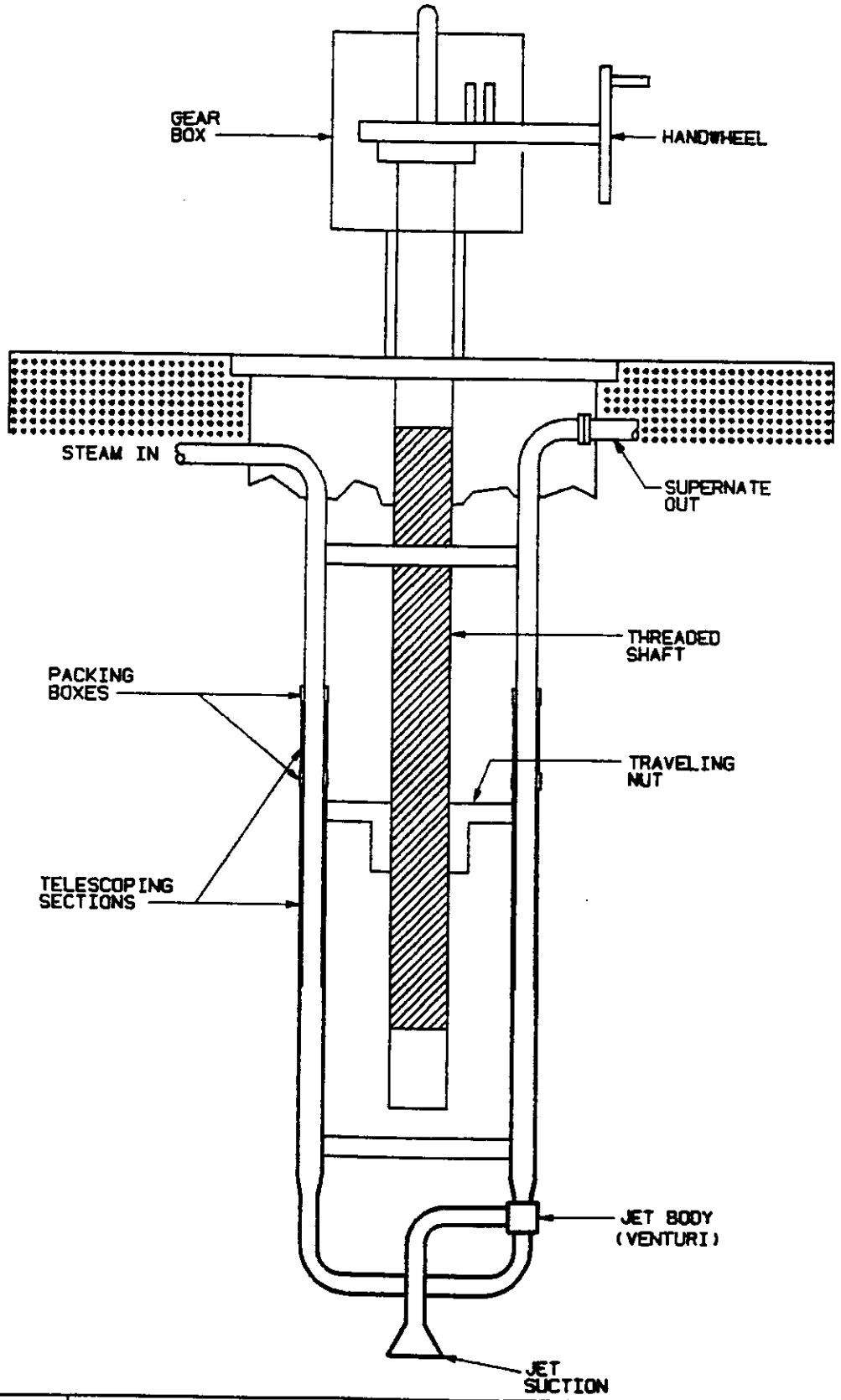

CAD NO.	FIGURE 7-10	NO SCALE
SE5-2-2006188	TYPICAL TELESCOPING JET PUMP	6000-44-3190W

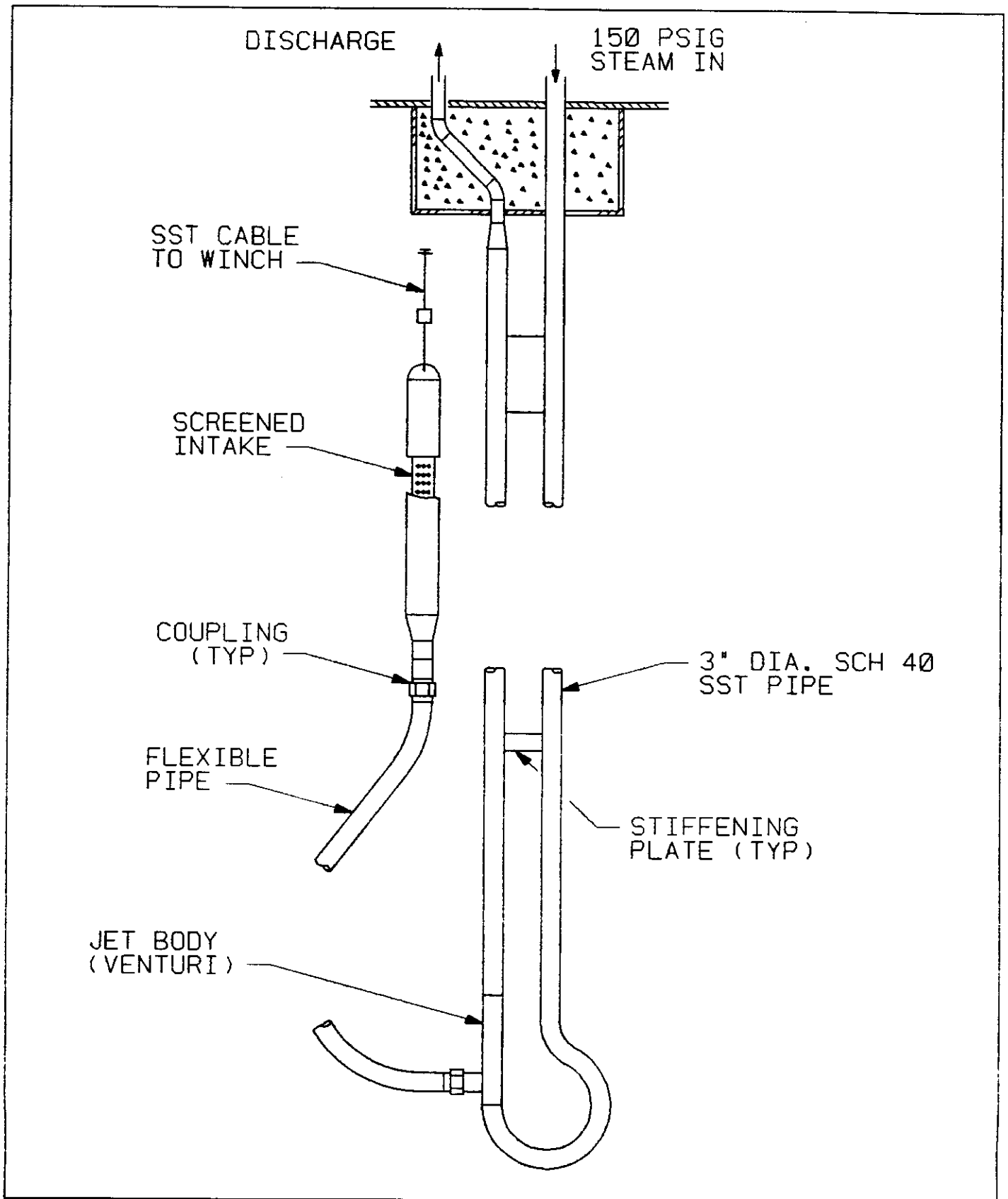

CAD NO.	FIGURE 7-11	NO SCALE
W2020548	TYPICAL TELESCOPING JET PUMP (FLEXIBLE HOSE)	6000-44-3190W

These pumps are installed within a tank riser and are designed to be telescoping. The 45 foot long column consists of nine 5-foot flanged sections. A shaft runs down the center of the column and is supported by carbon bushings at each flange. The column is filled with inhibited water to lubricate the bushings. A mechanical seal just above the impeller casing prevents water leakage into the tank, and a positive pressure prevents waste from backing up into the pump column. The motor remains above the tank top while the impeller and volute are submerged in the tank contents (no priming required). The pumps are designed to be raised or lowered by adding of removing sections from the pump column, or by raising or lowering the entire slurry pump assembly (motor, pump column, and pump). For the latter telescoping method, a support structure is added to the tank top at the slurry pump tank riser locations since the motor and pump column can extend up to about 30 feet above the tank top when the slurry pump is at its highest elevation within the waste tank. The desired location of the slurry pump intake/discharge depends upon the depth of the tank contents.

The four types of slurry pumps which are currently used at the Tank Farms are described below.

- Standard Slurry Pumps have two nozzles 180° apart. The cleaning radius (distance from the volute over which mixing occurs) is approximately 25 feet. Three or four standard slurry pumps are used per tank during waste removal operations. The pumps are progressively lowered to suspend the deeper layers of waste solids.

- Single Nozzle Slurry Pumps are identical to standard slurry pumps except that pumped liquids are discharged through a single nozzle. The pump is also operated at higher pumping speeds. These differences produce a cleaning radius almost twice as large than that of the standard slurry pump. The single nozzle slurry pump is used in tanks which require the larger cleaning radius because of limited tank locations for

pump insertion. These pumps are also used as needed in tanks that are found to have sludge that is difficult to remove using standard slurry pumps.

- Quad-Volute Slurry Pumps are designed for agitating large volumes of waste solids. These tanks include the DWPF feed tanks (Tanks 40 and 51). Three of the nozzles are horizontal, and the fourth nozzle is slanting up at a 45° angle. The nozzles are in two groups which are 180° apart. The quad-volute pumps have approximately the same cleaning radius as the single nozzle pumps but provide better mixing. The quad-volute pumps will be used in sludge processing and ITP process operations.

- Low-Shear Slurry Pumps will be used for ITP operations in Tank 48. The low-shear pump is a modification of the pump volute and impeller of the standard slurry pump to minimize particle breakup of the shear-sensitive organic solids.

The specifications for these slurry pumps are summarized in Table 7-90. Figure 7-12 provides a typical cross-section of a slurry pump.

7.7 Pump Pit Pump Tanks

The pump pits are located at low points along waste transfer lines. Each pump pit contains a tank for temporary waste storage during transfer, and pumps to facilitate the transfer of wastewater. The pump tanks have a working capacity of approximately 5,800 gallons. Some of the tanks contain cooling coils. All of the tanks are housed within a concrete containment structure. The tank construction/testing procedures are similar to the standards which were used for the 304L stainless steel evaporators (material spcifications), and waste tanks (tank testing specifications) (Sections 7.1 and 7.4). Table 7-91 provides summary specifications for a typical pump pit pump tank.

TABLE 7-90

TYPICAL LONG-SHAFT SLURRY PUMP SPECIFICATIONS

	Standard[b]	Single Nozzle[b]	Quad-Volute[b]	Low Shear[b]
Manufacturer	Bingham-Williamette	Bingham-Williamette	Bingham-Williamette	Bingham-Williamette
Maximum Capacity [GPM @ Head (FT H_2O)]	2000 at 190'	2000 at 125'	4000 at 145'	900 at 68'
Speed-Variable (RPM)	1760 max.	2200 max.	2200 max.	900 max.
Motor (HP)	150	150	300	75
Volute Diameter (inches)	22-5/8	22-5/8	34	34
Shaft Diameter (inches)	2	2	2	2
Impeller Diameter (inches)	15	10-7/8	10-3/8	14
Column Diameter (inches)	16	16	16	16
Discharge Diameter [inches (number)]	1-1/2 (2)	3 (1)	3 (4)[a]	(2)
Cleaning Radius (feet)	25	40	40	30

Notes:

[a] Only 2 of the 4 nozzles are used at any one time.

[b] Typical pump curves provided in Appendix A.

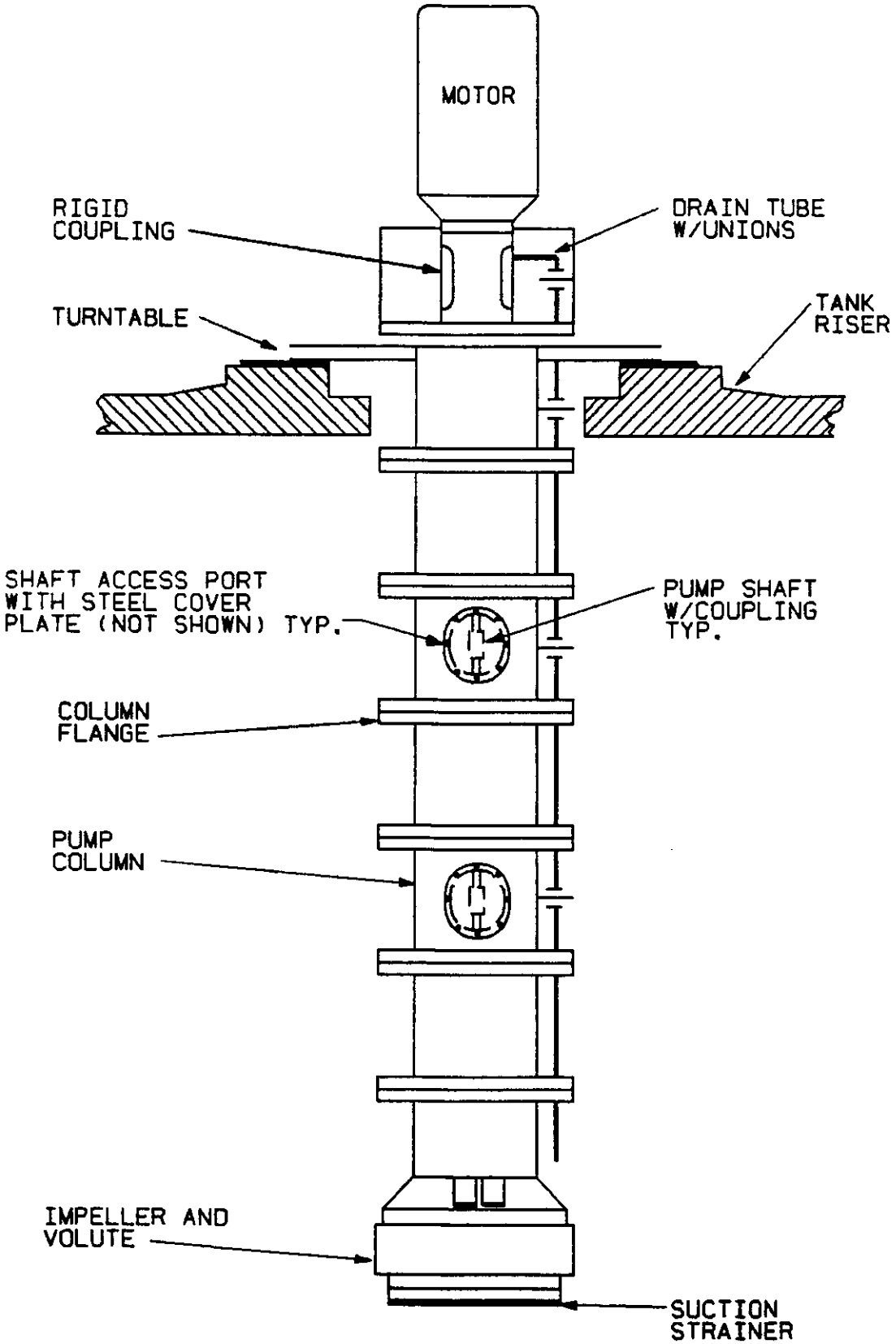

CAD NO.	FIGURE 7-12	NO SCALE
SE5-2-2006186	TYPICAL LONG SHAFT SLURRY PUMP	6000-44-3190W

TABLE 7-91

TYPICAL PUMP PIT PUMP TANK

Description	Specification
Dates Installed	See Table 4-13
Dimensions (diameter, height)	12', 8' 6"
Capacity (nominal)	5,800 gallons
Shell Thickness:	
Wall:	3/8 inch
Top:	3/8 inch
Bottom:	3/8 inch
Material of Construction:	304L Stainless Steel
Design Temperature	167°C
Design Pressure (maximum specific gravity @ full waste capacity)	2 psig
Cooling Coils	(Tanks FPP2, FPP3, HPP3 through HPP6 only)
Testing Pressure:	150 PSI at 100°F
Material of Construction:	304L Stainless Steel
Pump Installation:	See Section 7.6.2.1

8.0 REFERENCES

Du Pont, undated. Liquid Waste Tank Structural Design Concepts (DPE-3477), Savannah River Plant, and Company, Engineering Department, Wilmington, DE. E. I. du Pont de Nemours and Company.

Du Pont, 1975. Seismic Analysis of Waste Storage Tanks (DPSTSA-200-10 Sup-18), Savannah River Plant; Engineering Department, E.I. du Pont de Nemours and Company, Wilmington, DE (June 1975).

Du Pont, 1986. Technical Standard Waste Tank Farms (DPSTS-241), E. I. du Pont de Nemours and Company, Savannah River Laboratory, Aiken, SC (June 1986).

Legler, B. M.; et. al., 1988. Safety Analysis - 200 Area Savannah River Plant Separations Area Operations - Liquid Radioactive Waste Handling Facilities, E. I. du Pont de Nemours and Company, Savannah River Laboratory, Aiken, SC (August 1988).

McNatt, F. G., 1979. Savannah River Plant Waste Tank Inspection Manual (DPSP 79-1003), Savannah River Plant, E. I. du Pont de Nemours & Company, Waste Management Technology, Aiken, SC (January 1979).

WSRC, 1990A. Waste Management Monthly Data Record, April, 1990 (WSRC-RP-90-78-04B), Westinghouse Savannah River Company, Aiken, SC (July 1990).

WSRC, 1990B. Permit Application for an Industrial Wastewater Treatment Facility for the DWPF Vitrification Facility - Cold Run Addendum, Westinghouse Savannah River Company, Aiken, SC (1990).

APPENDIX A

TYPICAL PUMP CURVES

TYPICAL PUMP CURVE
EVAPORATOR FEED PUMP

FOR

1) 242-F EVAPORATOR SYSTEM - TANK 26
2) 242-H EVAPORATOR SYSTEM - TANK 13
3) 242-16F EVAPORATOR SYSTEM - TANK 26
4) 242-16H EVAPORATOR SYSTEM - TANK 43

vannah River Plant
ject 9S1618
AXC-1257-W

EN 15-20-3-5
15-20-4-5
115-20-2-5

Bldg. 242-16F+H

XA-415

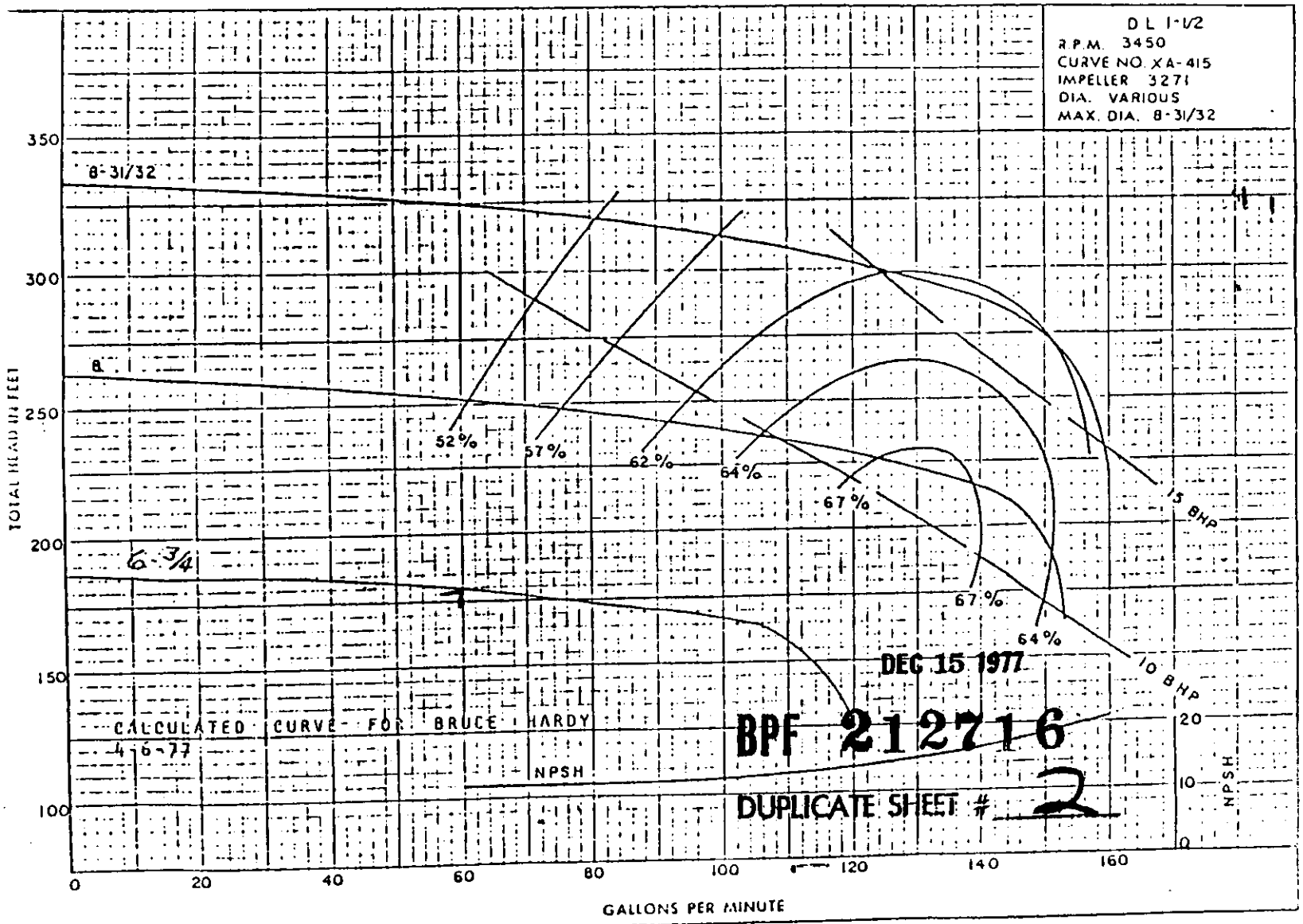

DEC 15 1977

BPF 212716

DUPLICATE SHEET # 2

VPD-TEXAS OPERATIONS

CUST: TENCARVA MACHINERY CO.
P.O.: D5-53770-80

DATE: 6-5-85
DRAWN BY: WDH

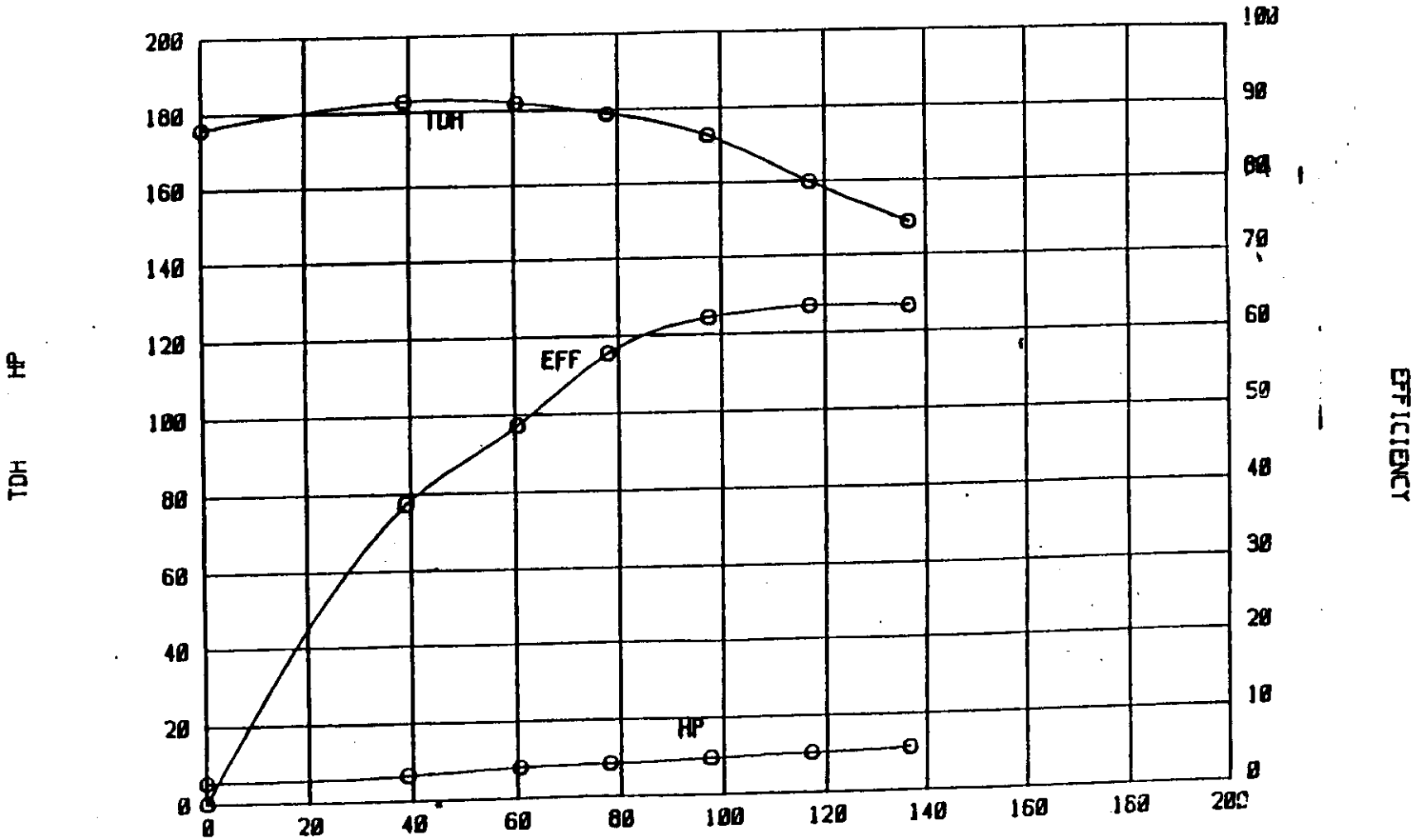

VISC: 1.8
S.G.: 1.4

GPM
RPM: 3500
TYPE: 1X1.5-8

SERIAL NO: 406809
CURVE NO: T-L86-2643
IMP DIA: 6.25

TYPICAL PUMP CURVE

DRAWOFF AND RECIRCULATION PUMPS

FOR

1) 242-F CTS
2) 242-H CTS

"HAZLETON" PUMPS

BARRETT, HAENTJENS & CO. HAZLETON, PA.

CHARACTERISTIC
PERFORMANCE
CURVE

CAS. D13367 & A P13367-V13367-D13367B-11,000-11½CC-IMPD13413 P13413-M-87%
5V13413 9.625T.

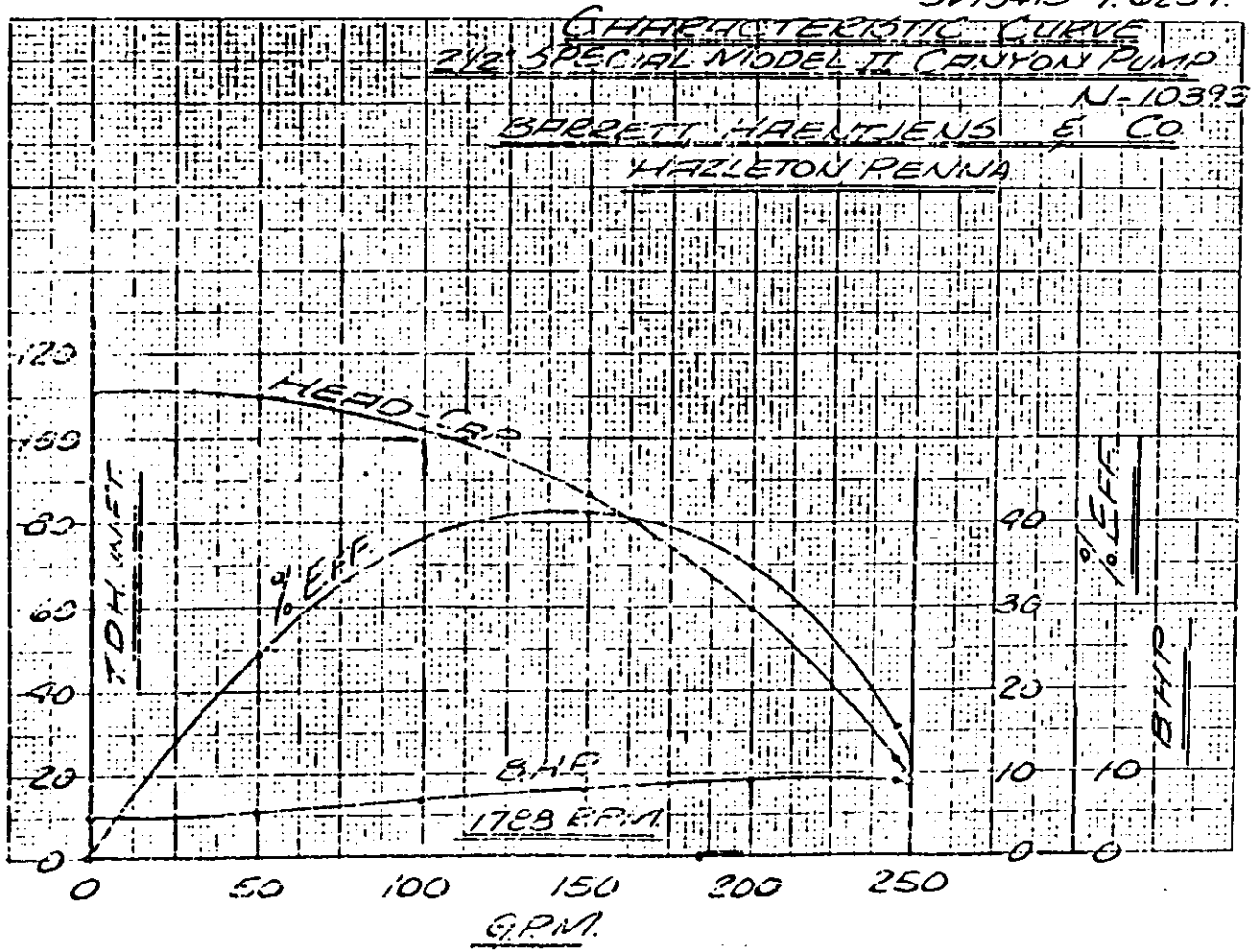

TYPICAL PUMP CURVE

HOLD TANK PUMP

FOR

1) 242-F EVAPORATOR SYSTEM

E.I. DUPONT ORDER AXC 242631/2
ITEM 242F-43-20-1
PUMP NO. 33851

TEST PERFORMANCE CURVE DEC. 9, 1958
3HP 1760 RPM A.C. T.E.F.C. VERT. MOTOR

LAWRENCE PU[illegible] INC
37[illegible] MARKET [illegible]
LAWRENCE [illegible]

CHARACTERISTIC CURVES
1" DIA VERTICAL SUBMERGED PUMP
SPEED 1760 R.P.M.
MAX. IMPELLER 8 3/8" DIA.
MIN. IMPELLER 6" DIA.

DEC [illegible] 1958

PT 210491

DUPLICATE SHEET # 2

"INFORMATION ONLY"

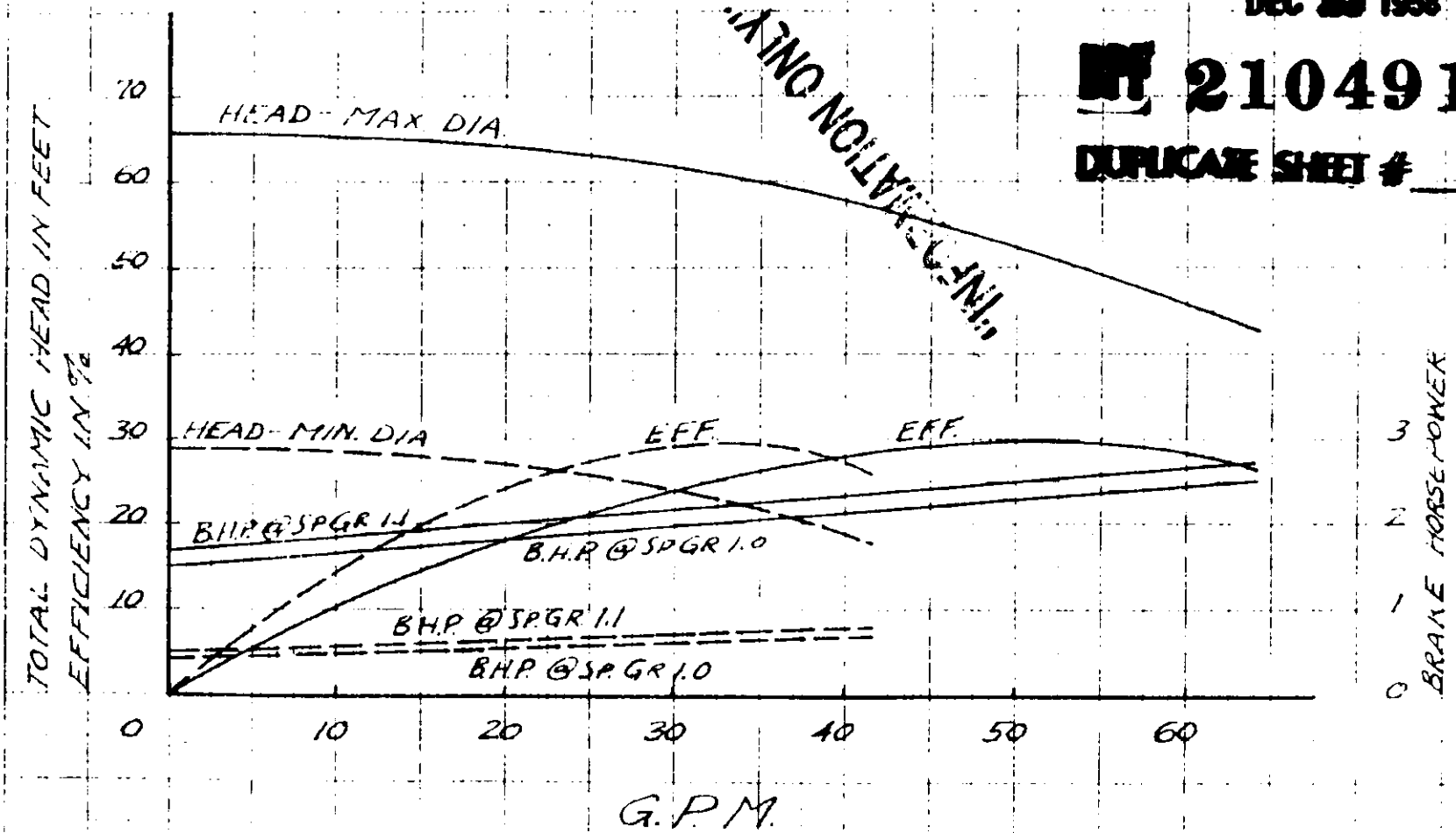

E292A

TYPICAL PUMP CURVE

HOLD TANK PUMP

FOR

1) 242-16F EVAPORATOR SYSTEM

DATE 2-4-70

REV. DATE 2/16/76 TRACED, METRIC ADDED P.A.D. BEF

GOULDS PUMPS, INC.
SENECA FALLS, NEW YORK 13148

CENTRIFUGAL PUMP CHARACTERISTICS

RPM	3500 CDS 2100
MODEL	3196 ST
SIZE	1 x 1 1/2-8
IMP. DWG.	76779
STEEL	76793
PATTERN	56090
	56208
EYE AREA	3.55 SQ. IN.

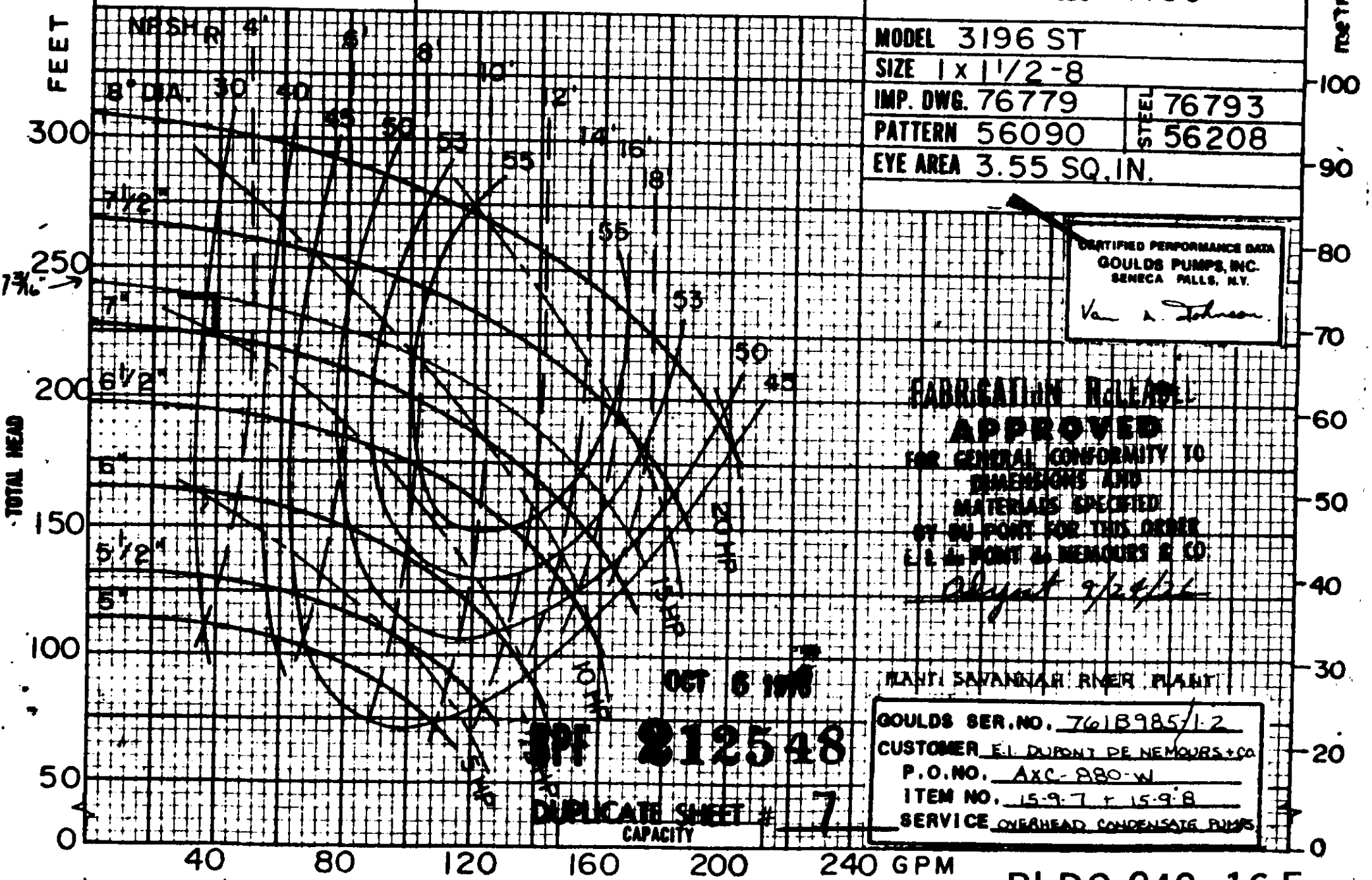

CERTIFIED PERFORMANCE DATA
GOULDS PUMPS, INC.
SENECA FALLS, N.Y.
Van A. Johnson

FABRICATION RELEASE
APPROVED
FOR GENERAL CONFORMITY TO
DIMENSIONS AND
MATERIALS SPECIFIED
BY DU PONT FOR THIS ORDER
E.I. du PONT de NEMOURS & CO.
Adyant 9/24/76

OCT 6 1976

SPF 212548

DUPLICATE SHEET # 7

PLANT: SAVANNAH RIVER PLANT

GOULDS SER. NO. 761B985/1-2
CUSTOMER E.I. DUPONT DE NEMOURS + CO
P.O. NO. AXC-880-W
ITEM NO. 15-9-7 + 15-9-8
SERVICE OVERHEAD CONDENSATE PUMPS

CAPACITY

BLDG 242 16 F

TYPICAL PUMP CURVE

HOLD TANK PUMP

FOR

1) 242-16H EVAPORATOR SYSTEM

DA[illegible]-12-70

REV. DATE [illegible]

GOULDS PUMPS, INC.
SENECA FALLS, NEW YORK 13148

CENTRIFUGAL PUMP CHARACTERISTICS
PLANT (SRP) PROJECT (951618)

GOULDS SER. NO. 770B736-1-2
CUSTOMER E.I. DUPONT DENEMOURS
P.O. NO. AXC-1109-W
ITEM NO. EQUIP. NO. 115-9-7, 115-9-8
SERVICE OVER HEADS CONDENSATE PUMPS

RPM 3500 CDS 2075-2
MODEL 3196ST
SIZE 1 x 1 1/2 - 6
IMP. DWG. 76777 STEEL 76781
PATTERN 56088 56206
EYE AREA 3.14 SQ.IN.

JUN 27 1977

BPF 212627

DUPLICATE SHEET # 3

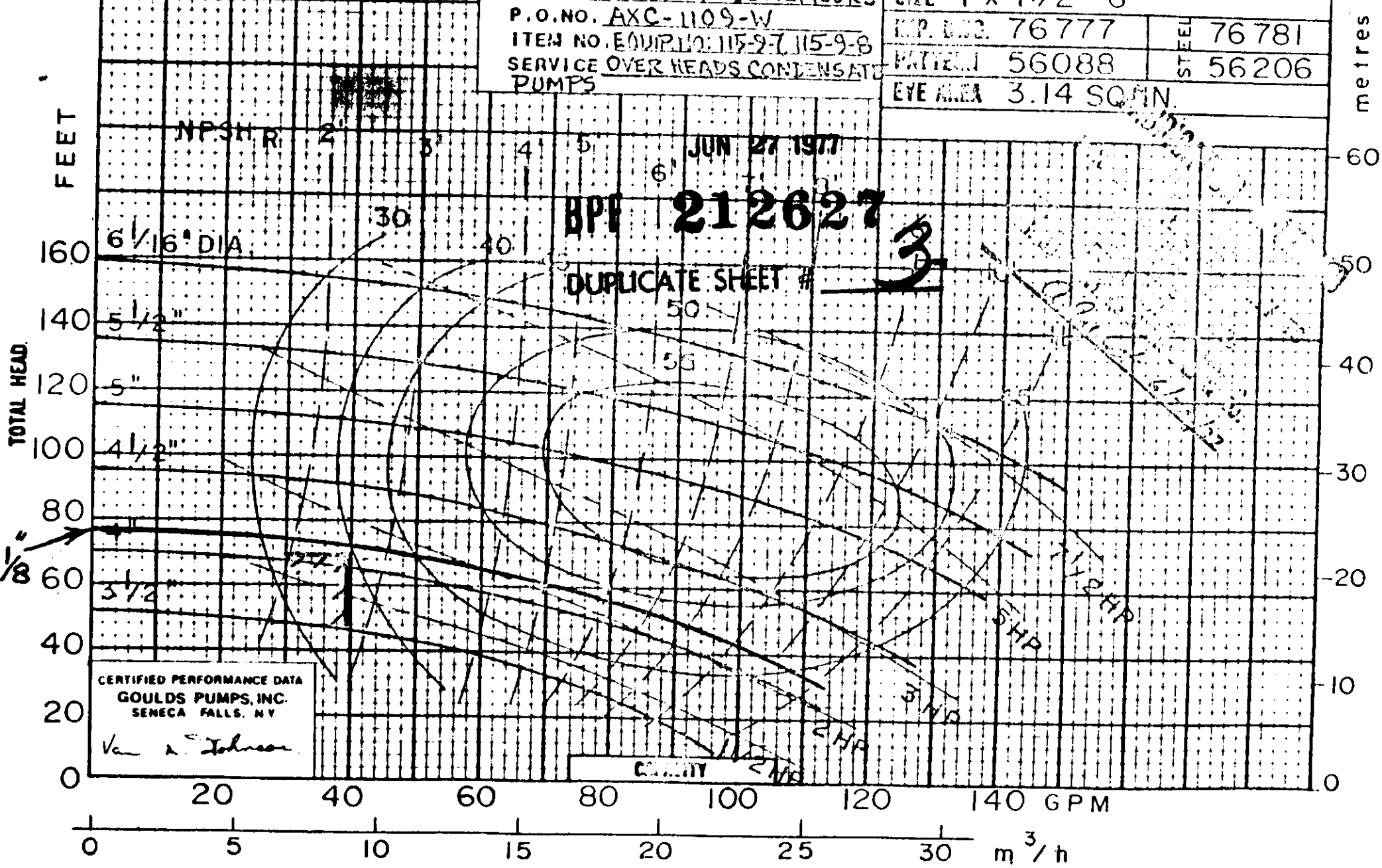

CERTIFIED PERFORMANCE DATA
GOULDS PUMPS, INC.
SENECA FALLS, N.Y.
Van [illegible] Johnson

TYPICAL PUMP CURVE

CRC PUMP

FOR

1) 242-F EVAPORATOR SYSTEM

SUPPLY - BPF #213142, SHT #3
RETURN - B[F #213142, SHT #4

PACIFIC PUMPS

PACIFIC PUMPS DIVISION . DRESSER INDUSTRIES, INC.

MANUAL Technical Data
SECTION CMP
PAGE NO. 12
REV. DATE 11-8-79

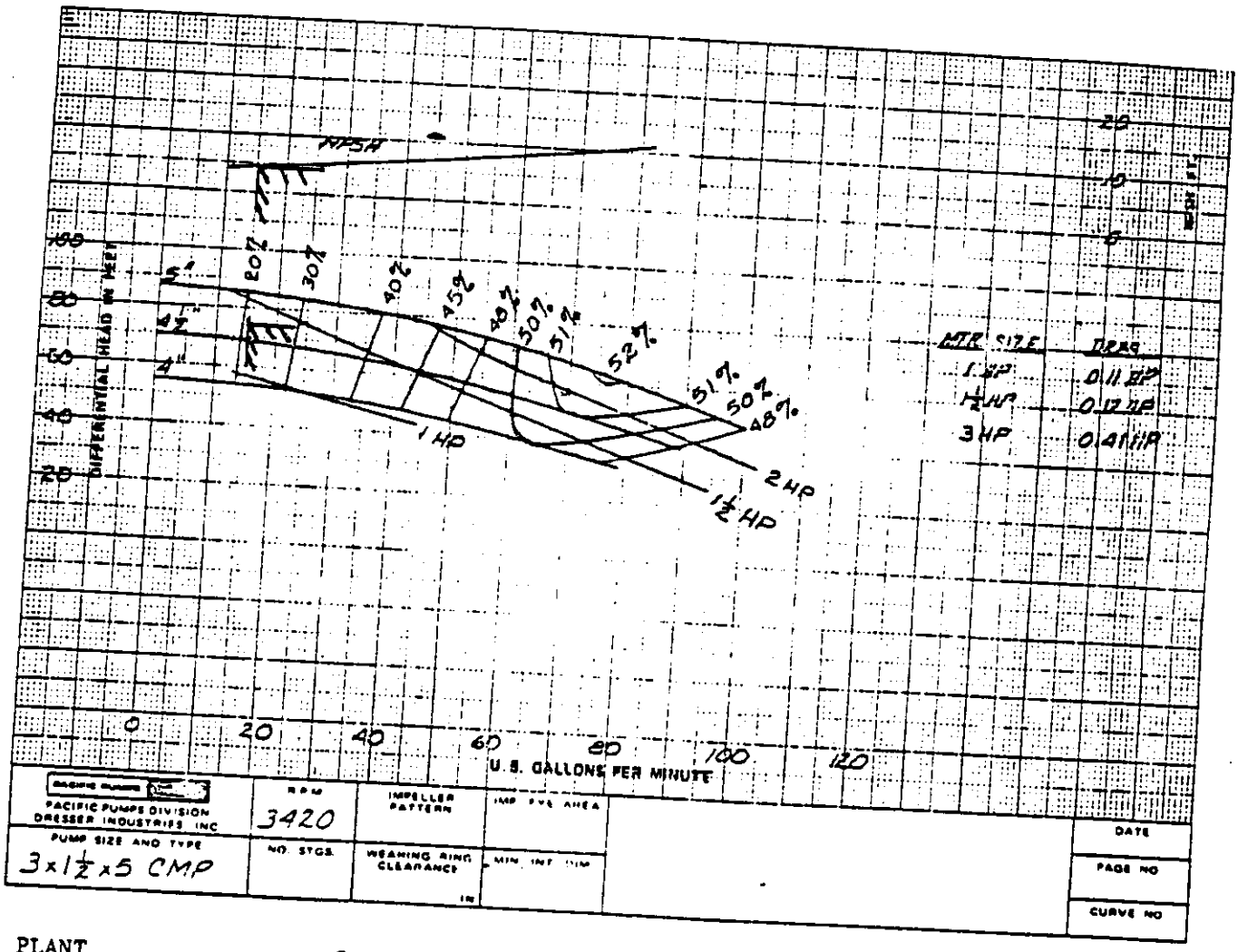

PLANT Savannah River Plant
PROJECT 9S2081
DUPONT ORDER NO. AXC-2554-W
EN NUMBER W-319-13-3
PACIFIC SHOP ORDER NO. C-51305

SEP 5 1980

CERTIFIED BY

TF 213142

DUPLICATE SHEET # 3

BLDG 241 F&H

CRC sup

PACIFIC PUMPS

PACIFIC PUMPS DIVISION · DRESSER INDUSTRIES, INC.

MANUAL Technical Data
SECTION CMP
PAGE NO. 12
REVISION 11-8-79

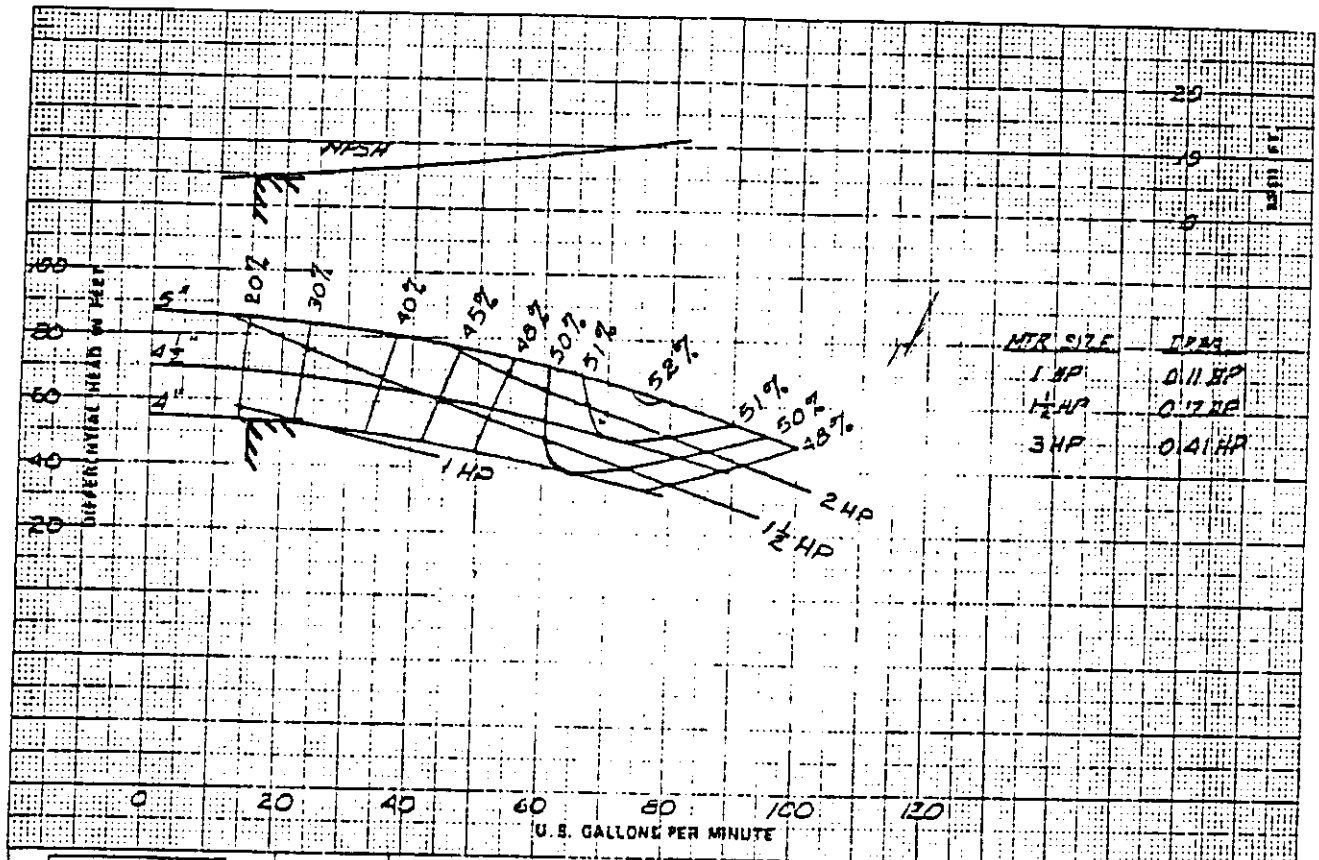

PACIFIC PUMPS DIVISION DRESSER INDUSTRIES INC	RPM 3420	IMPELLER PATTERN	IMP. EYE AREA	DATE
PUMP SIZE AND TYPE 3x1½x5 CMP	NO. STGS	WEARING RING CLEARANCE IN	MIN. INT. DIA.	PAGE NO. / CURVE NO.

PLANT	Savannah River Plant
PROJECT	9S2801
DUPONT ORDER NO.	AXC-2554-W
EN NUMBER	W-319-13-5 & W-319-13-6
PACIFIC SHOP ORDER NO.	C-51305

SEP 5 1980

CERTIFIED BY TK Whitaker

F 213142

BLDG 241 F&H

DUPLICATE SHEET # 4

TYPICAL PUMP CURVE

CRC PUMP TANK PUMP

FOR

1) 242-H EVAPORATOR SYSTEM

T1850

LAWRENCE PUMPS INC.
371 MARKET ST.
LAWRENCE, MASS. 01843

CHARACTERISTIC CURVE ☐
TEST PERFORMANCE CURVE ☒
TEST NO. T1850
NOTE: TEST SPEED 1940 RPM

CERT. FOR: EI DUPONT
TESTED BY: RJM DATE: 9/15/85
ACCEPTED BY: DATE:
COMMENT:

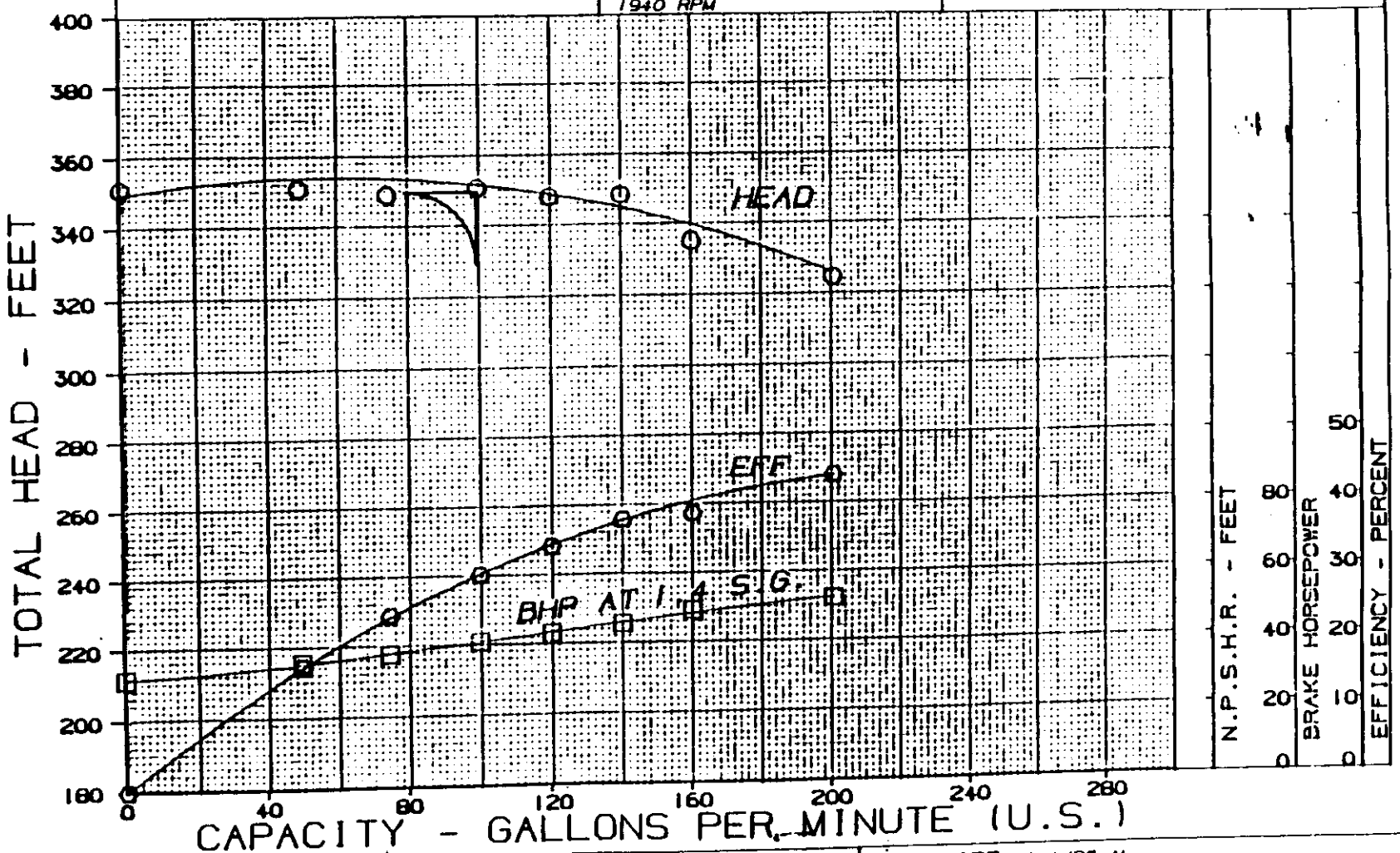

CUSTOMER EI DUPONT DENEMOURS INC
USER SAVANNAH RIVER PLANT

SERVICE RADIOACTIVE SLURRY
GPM 100 TDH 520/350
SP. GR. 1.4 VISC. 5 CP

PUMP SIZE 1 1/2" AL
PUMP TYPE VERT CANT SLURRY
IMP.: DESIGN 15 MAX 15 MIN 10.5

TYPICAL PUMP CURVE

CRC PUMP TANK PUMP

FOR

1) 242-16F EVAPORATOR SYSTEM
2) 242-16H EVAPORATOR SYSTEM

PUMP CASING C-38354	SIZE 3/4"x 1"	MODEL JA
IMPELLER C-38345	EYE AREA 1.166	RPM 3450

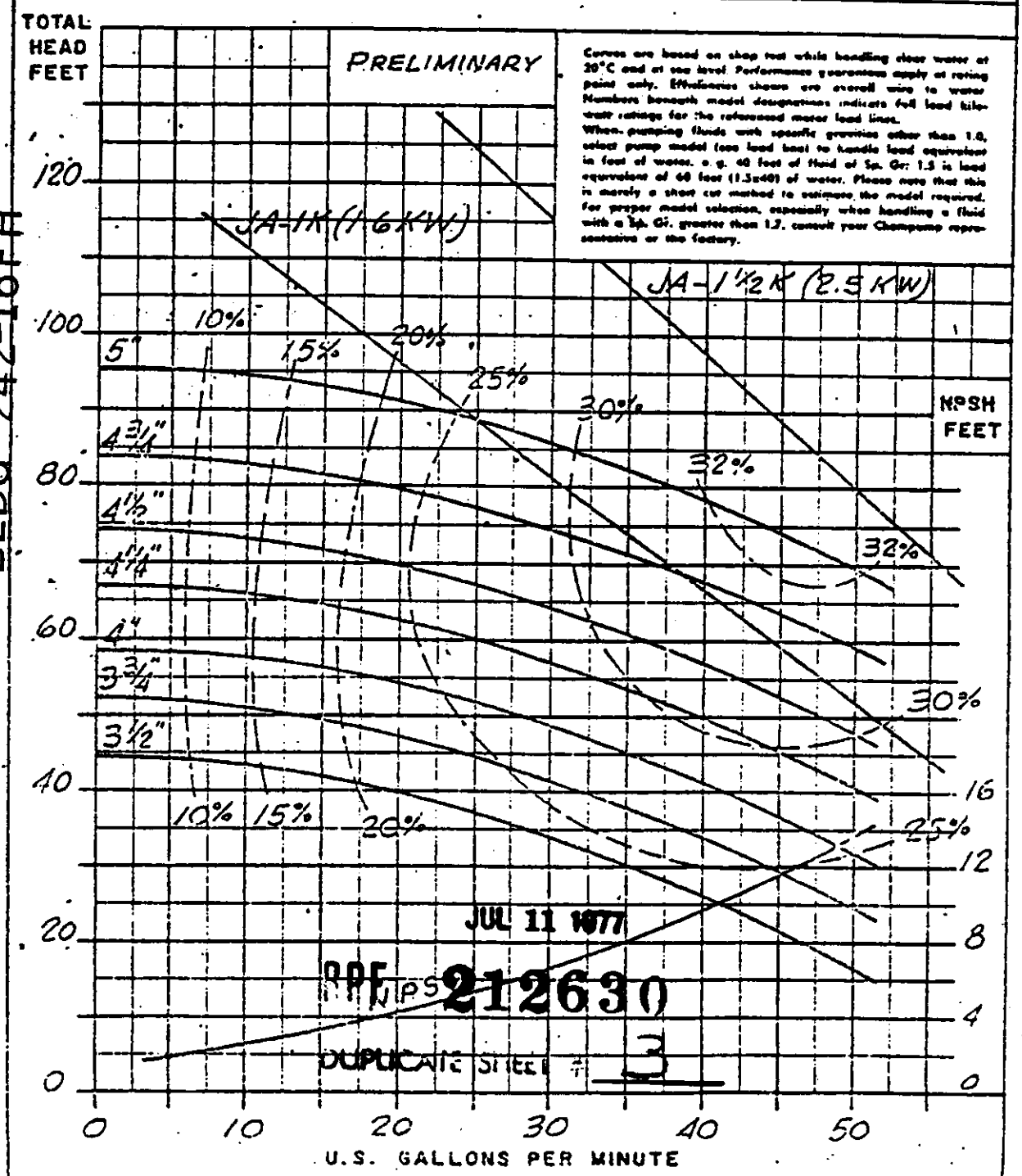

BLDG 242-16FH

JUL 11 1977

RPF 212630

DUPLICATE SHEET # 3

CHEMPUMP DIVISION CRANE CO. MARRINGTON, PENNSYLVANIA	DRAWN JFK	CHECKED JFH	DATE 10-30-73	CURVE NO. A-70045

TYPICAL PUMP CURVE

PUMP PIT PUMPS

FOR

1) HPP 7	5) APP 1	8) LPPP 1
2) HPP 8	6) APP 2	9) LPPP 2
3) HPP 9	7) APP 3	10) LPPP 3
4) HPP 10		

. DUPONT DE NEMOURS & COMPANY

P.O. # AXC20622

DATE: JAN 27 1989
CERTIFIED
BY: Gary Leeds
CHIEF-GENERAL ENGINEERING
BARRETT, HAENTJENS & CO.
HAZLETON, PA. 18201

CASD16840G P16840 V16840F- 12B-IMPD16820H P V16820- 4- 12T
M= 88.7 %

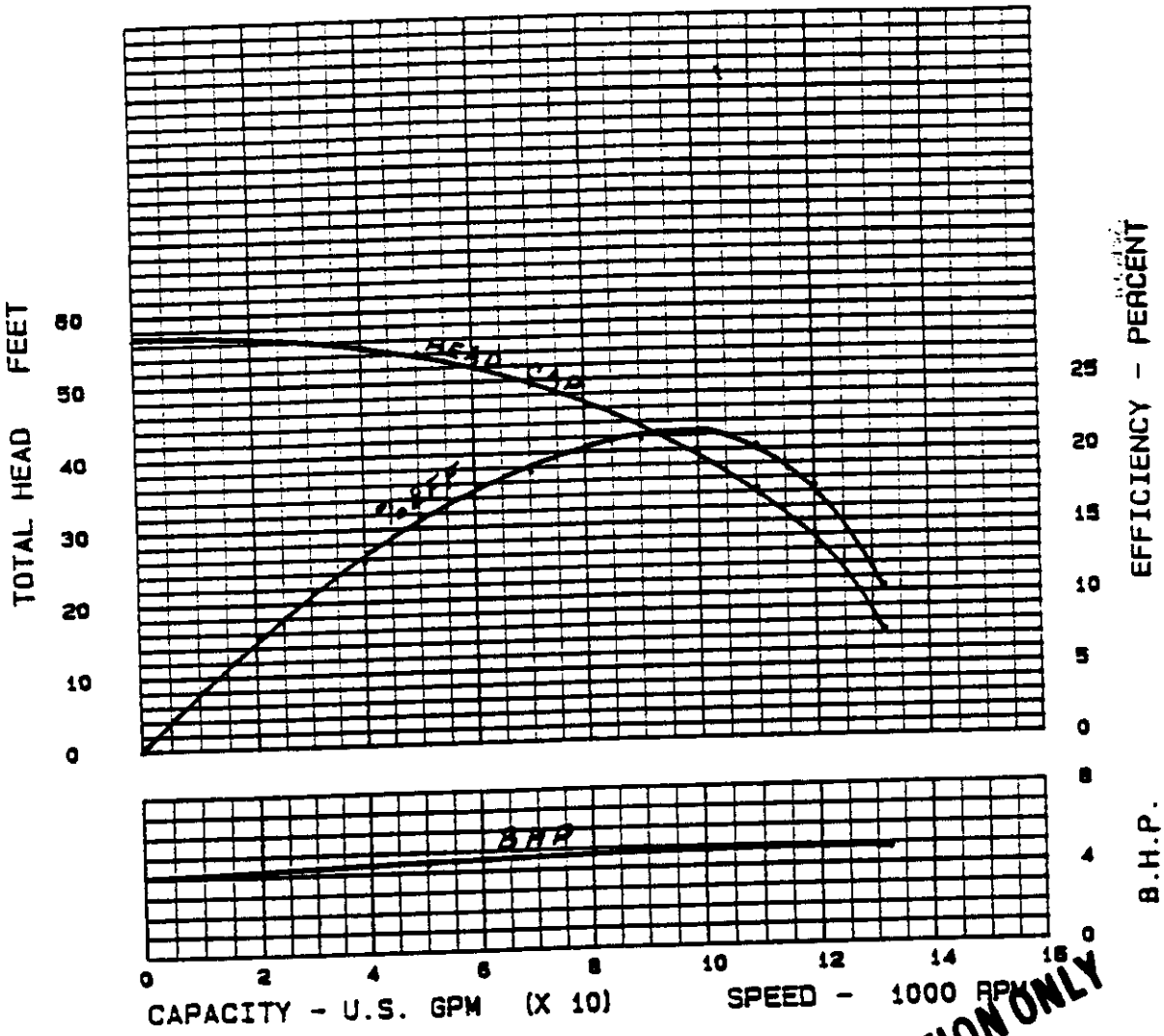

INFORMATION ONLY

1000 RPM TEST
TESTED 01-26-89

N-20321 3 SPEC. VNBS

. DUPONT DE NEMOURS & COMPANY

P.O. # AXC20622

DATE: JAN 27 1989
CERTIFIED
BY: Harry Leeder
CHIEF-GENERAL ENGINEERING
BARRETT, HAENTJENS & CO.
HAZLETON, PA. 18201

CASD16840G P16840 V16840F- 12B-IMPD16820H P V16820- 4- 12T
M= 88.7 %

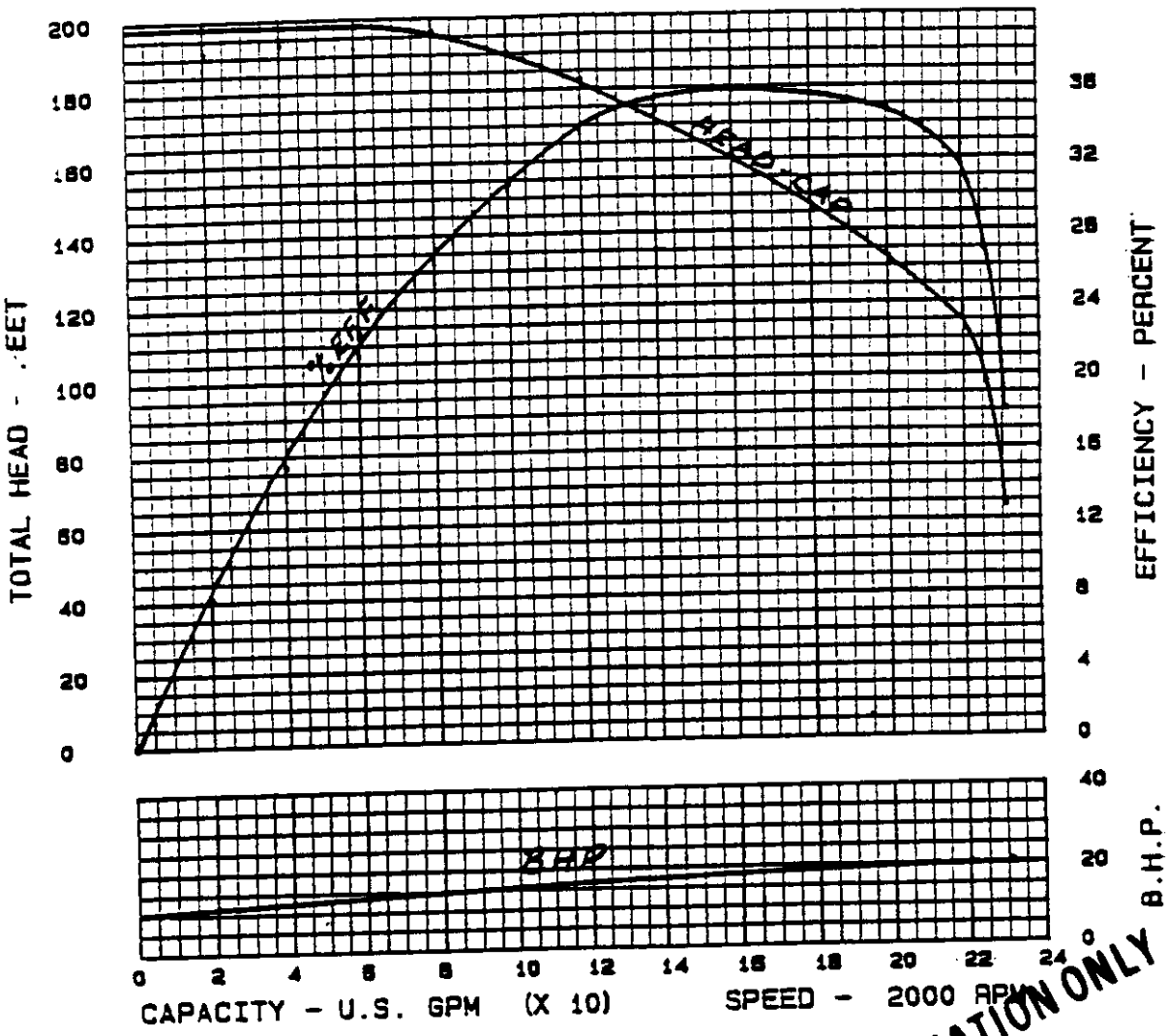

INFORMATION ONLY

2000 RPM TEST
TESTED 01-26-89

N-20321 3 SPEC. VNBS

E.I. DUPONT DE NEMOURS & COMPANY

P.O. # AXC20622

DATE: JAN 27 1989
CERTIFIED
BY: [signature]
CHIEF-GENERAL ENGINEERING
BARRETT, HAENTJENS & CO.
HAZLETON, PA. 18201

CASD16840G P16840 V16840F- 12B-IMPD16820H P V16820- 4- 12T
M= 88.7 %

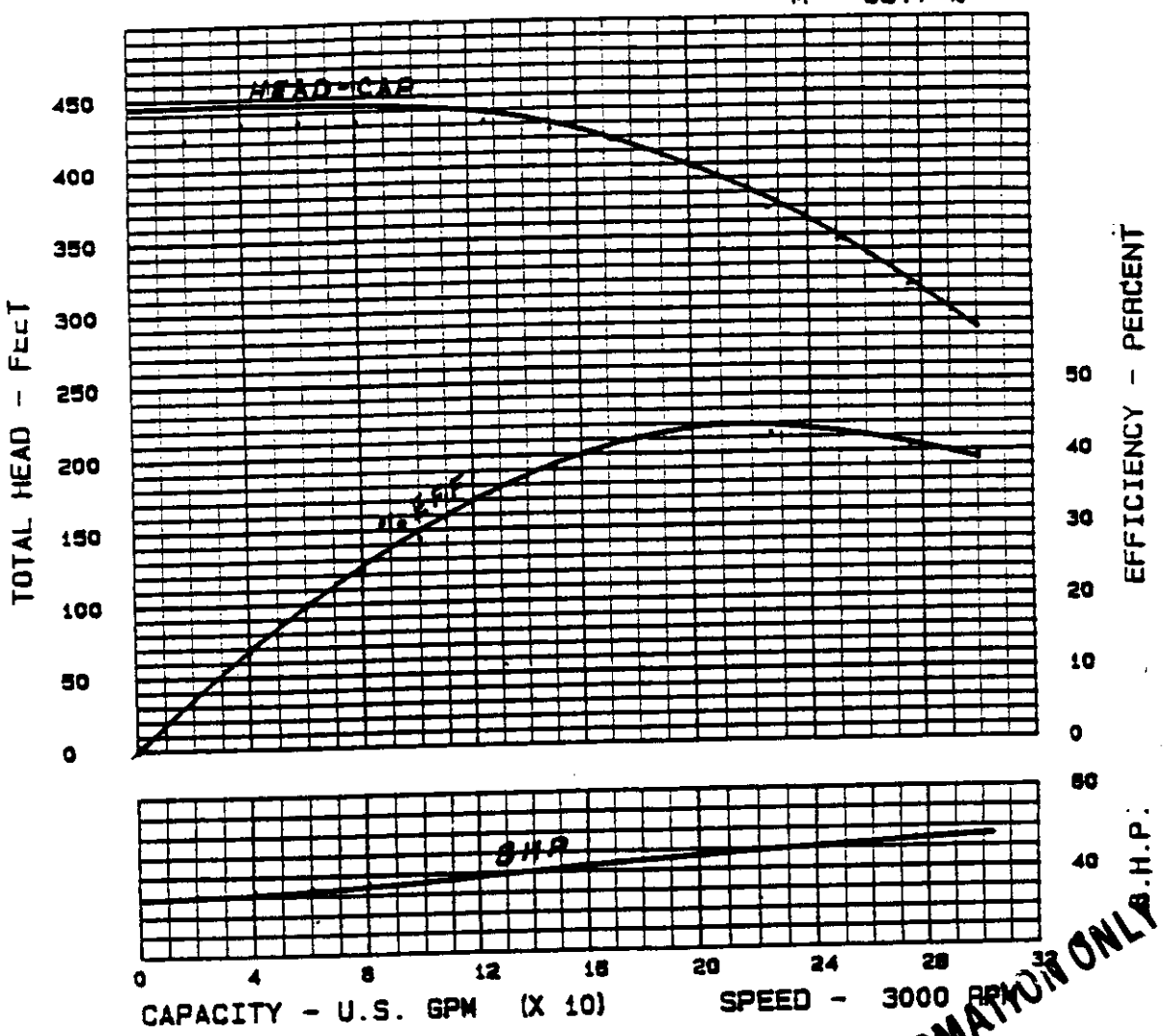

INFORMATION ONLY

3000 RPM TEST

N-20321 3 SPEC. VNBS

TYPICAL PUMP CURVES

PUMP PIT PUMP

FOR

1) FFP 1

NOTE: THIS PUMP IS A TWO-SPEED PUMP (1950 RPM AND 2350 RPM). A PUMP CURVE FOR EACH SPEED IS PROVIDED.

T1850

LAWRENCE PUMPS INC.
371 MARKET ST.
LAWRENCE, MASS. 01843

CHARACTERISTIC CURVE ☐
TEST PERFORMANCE CURVE ☒
TEST NO. T1850
NOTE: TEST SPEED 1940 RPM

CERT. FOR: EI DUPONT
TESTED BY: RJM DATE: 9/15/85
ACCEPTED BY: DATE:
COMMENT:

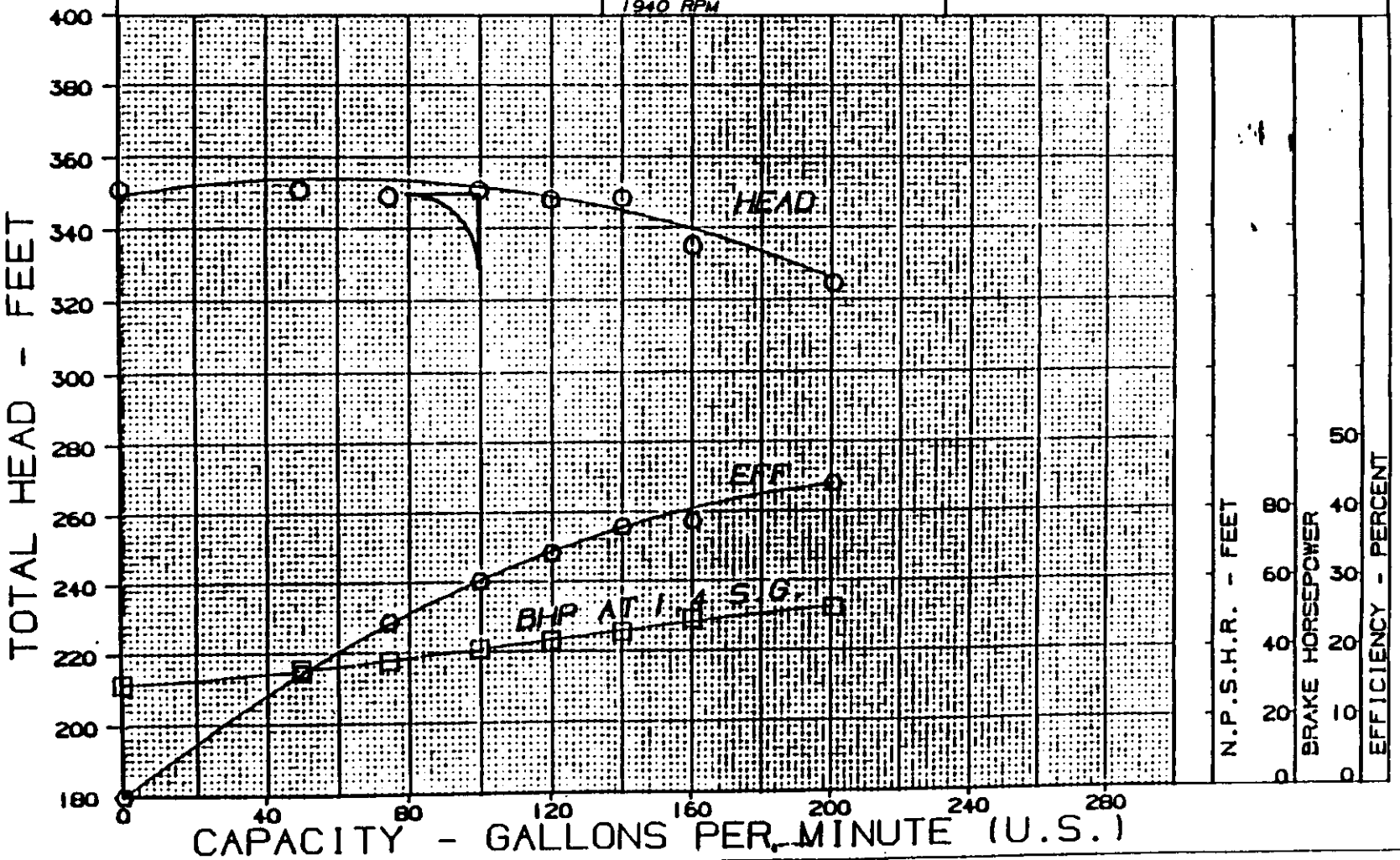

CUSTOMER EI DUPONT DENEMOURS INC
USER SAVANNAH RIVER PLANT
ORDER NO. AXC 5455W

SERVICE RADIOACTIVE SLURRY
GPM 100 TDH 520/350
SP. GR. 1.4 VISC. 5 CP

PUMP SIZE 1 1/2" AL
PUMP TYPE VERT CANT SLURRY
IMP.: DESIGN 15 MAX 15 MIN 10.5
SER. NO. A0611-1

T1850

LAWRENCE PUMPS INC.
371 MARKET ST.
LAWRENCE, MASS. 01843

CHARACTERISTIC CURVE ☐
TEST PERFORMANCE CURVE ☒
TEST NO. T1850
NOTE: TEST SPEED 1940 RPM

CERT. FOR: EI DUPONT
TESTED BY: RJM DATE: 9/15/85
ACCEPTED BY: DATE:
COMMENT:

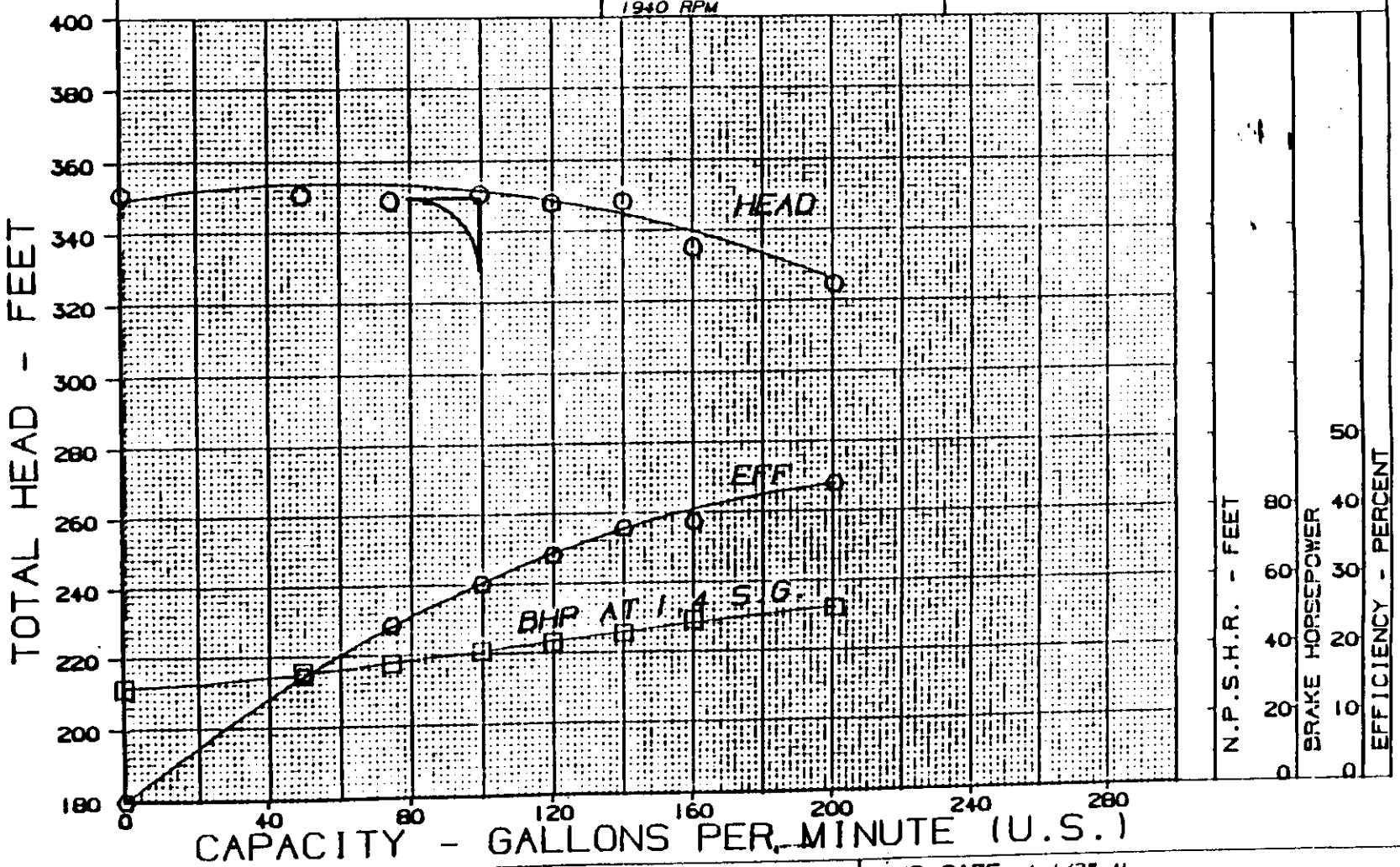

CUSTOMER EI DUPONT DENEMOURS INC
USER SAVANNAH RIVER PLANT
ORDER NO. AXC-5465W

SERVICE RADIOACTIVE SLURRY
GPM 100 TDH 520/350
SP. GR. 1.4 VISC. 5 CP

PUMP SIZE 1 1/2" AL
PUMP TYPE VERT CANT SLURRY
IMP.: DESIGN 15 MAX 15 MIN 10.5
RPM 1850 SER NO. 80611-1

TYPICAL PUMP CURVE

PUMP PIT PUMP

FOR

1) FPP 2
2) FPP 3

CASU1006 1&4 P13067 V13367-11.000 D-1MP D13413 P13413 V13413-5-8.250T

M=86.5%

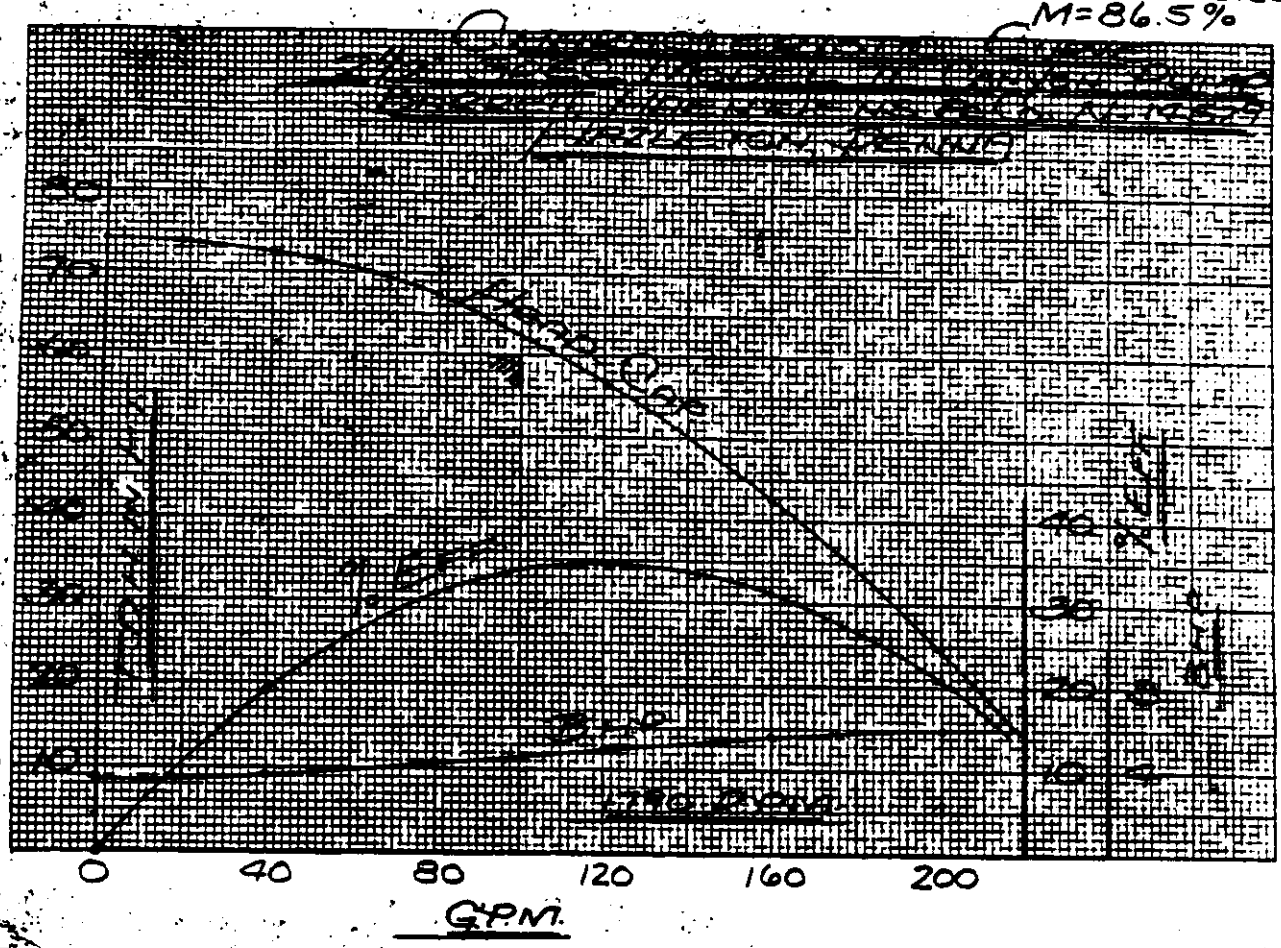

304L-1MP-5'-6" BMP x BP - 2½" PIPES - MAX CAP 215 G.P.M.
16.3' T.D.H. - 1786 R.P.M.

TESTED 11-2-77

TYPICAL PUMP CURVE

PUMP PIT PUMP

FOR

1) HPP 2
2) HPP 3
3) HPP 4

AXC 646W
Y521-1-2

ASD 12732-P12732-V12732-13.0008-IMP D12733-P12733-V8913A-5-10875"T
N-17852
M= 85

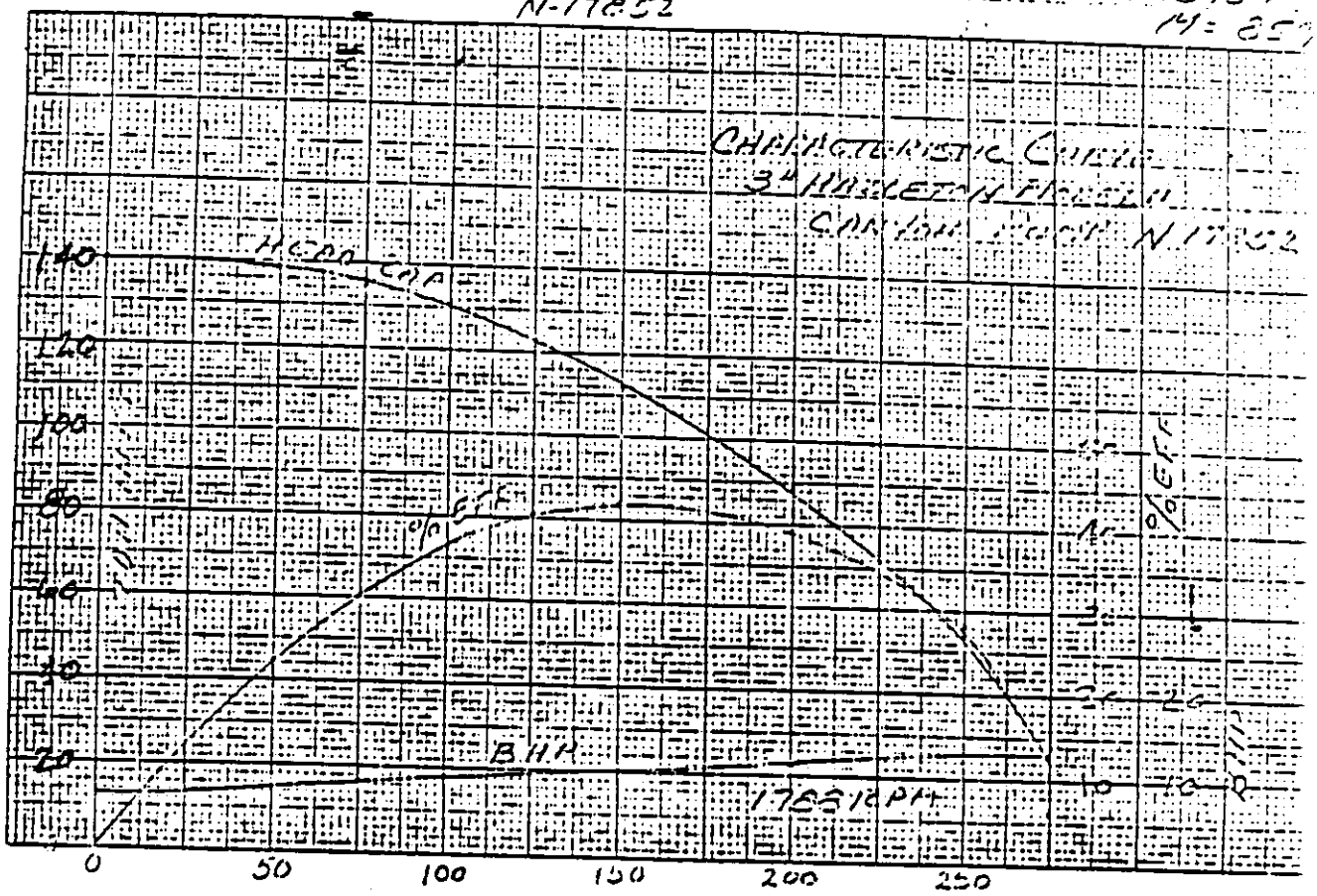

304L IMP 5'-10 5/32" BMP + BP 2 1/2" PIPES
MAX-CAP 274 GPM - 230' TDH - 1788 RPM

TYPICAL PUMP CURVE

PUMP PIT PUMP

1) HPP 5
2) HPP 6

CAS D12732 P12732-13.000B-IMP D12733 P12733-5-8913-11.375- M-87%

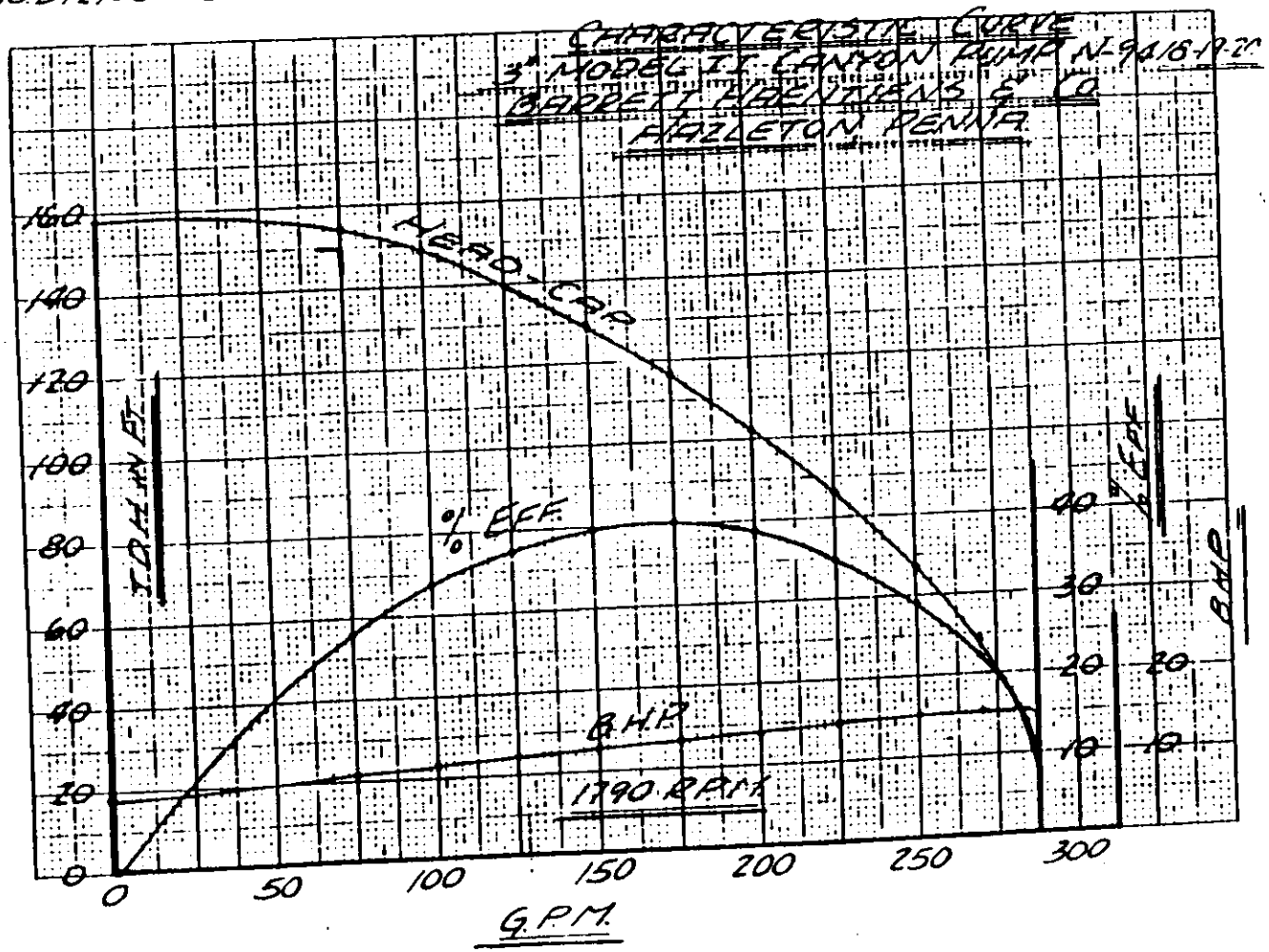

TYPICAL PUMP CURVES

WASTE TAMK PUMPS

1) TANK 48 FILTER FEED (2)

CAS D16778 P16778 V16778 28.125"B. IMP D16779 P16779 V16779-8-28.000"T.
M=90%

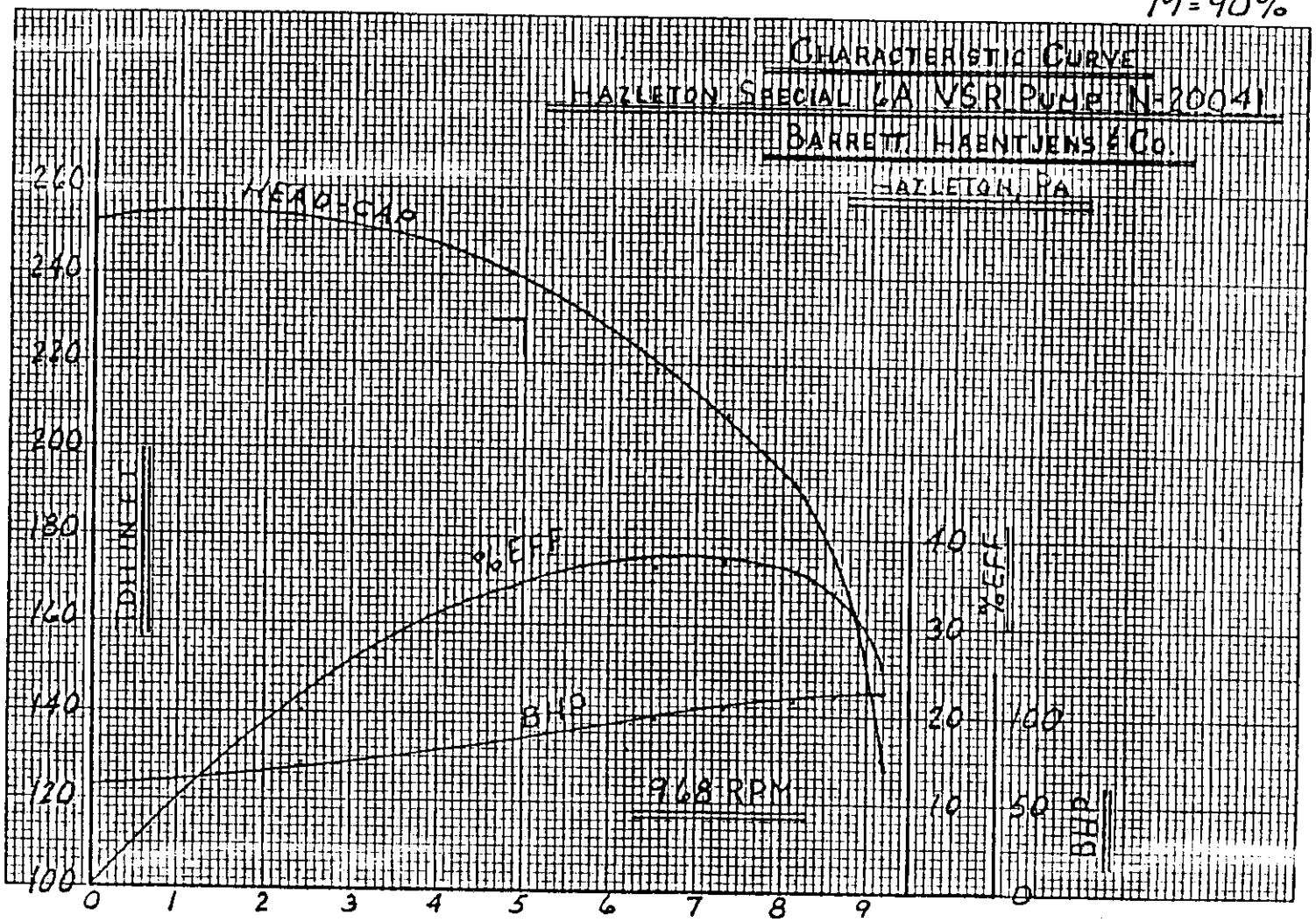

100 GPM

CUSTOMER E. I.DUPONT DE NEMOURS & CO., INC.

ORDER No. AXC 8468W

METAL TAG (EN) Y998-348-140 AXC 7468W

DATE: 10-14-86
CERTIFIED FOR CONSTRUCTION
BY: [signature]
CHIEF-GENERAL ENGINEERING
BARRETT, HAENTJENS & CO.
HAZLETON, PA. 18201

BARRETT, HAENTJENS & CO.
HAZLETON, PA.

CHARACTERISTIC CURVE

DATE 10-14-86

DRAWN CM/DBV

120376

CAS D16778 P16778 V16778 28.125"B. IMP D16779 P16779 V16779-8- 28.000"T.
M-90%

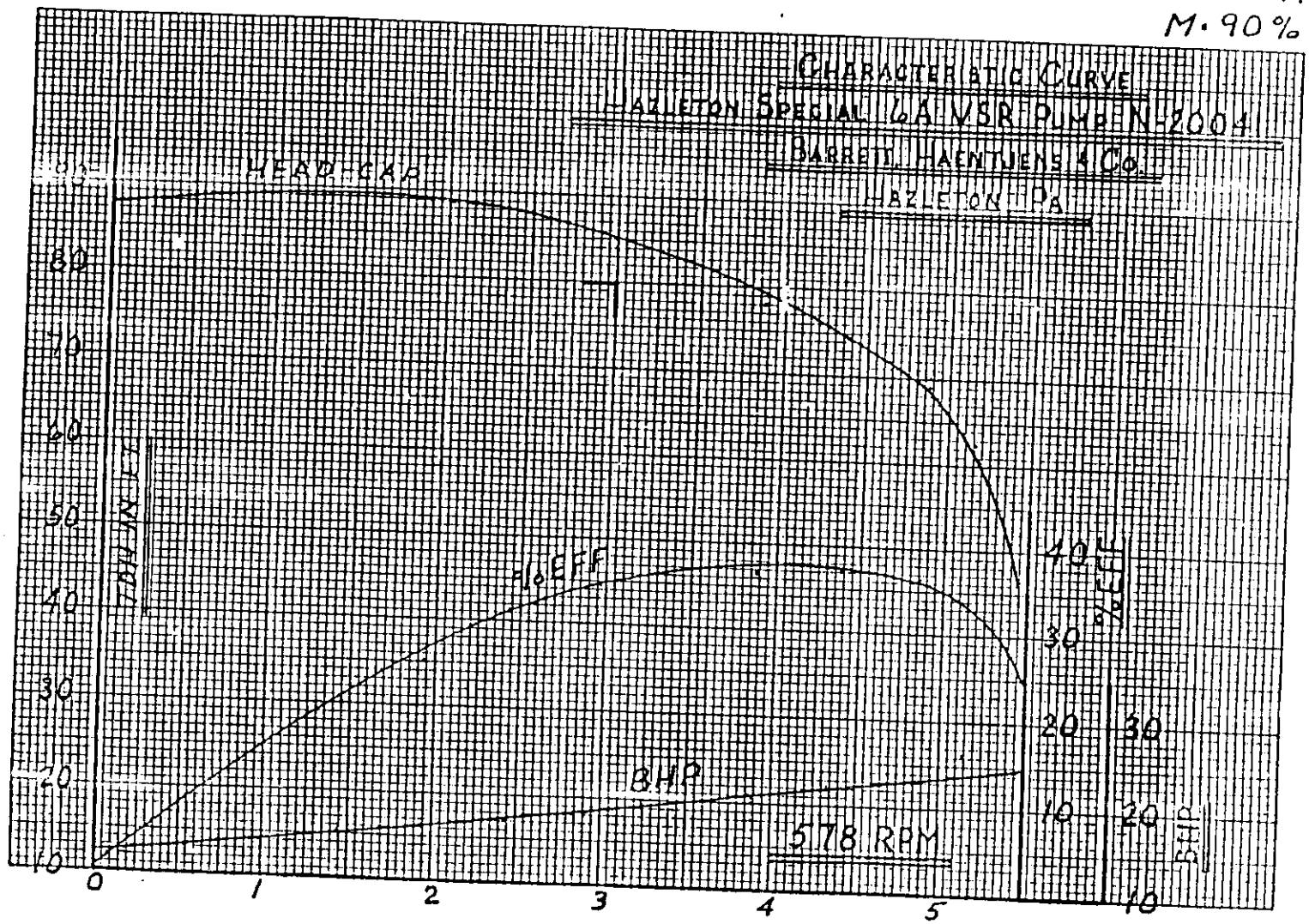

CUSTOMER E. I. DUPONT DE NEMOURS & CO., INC.

ORDER No. AXC 7468W

METAL TAG (EN) Y998-348-140 AXC 7468W

DATE: 10-14-86
CERTIFIED FOR CONSTRUCTION
BY: [signature]
CHIEF GENERAL ENGINEERING
BARRETT, HAENTJENS & CO.
HAZLETON, PA. 18201

BARRETT, HAENTJENS & CO.
HAZLETON, PA.

CHARACTERISTIC CURVE

DATE 10-14-86

DRAWN CH/DBV

C-20041

120376

TYPICAL PUMP CURVE

WASTE TANK PUMPS

1) TANK 48 TRANSFER

CAS D15922 P15922 V15922-11.250"B-IMP D15989 P15989 V15989-4-11.000"T

M= 89%

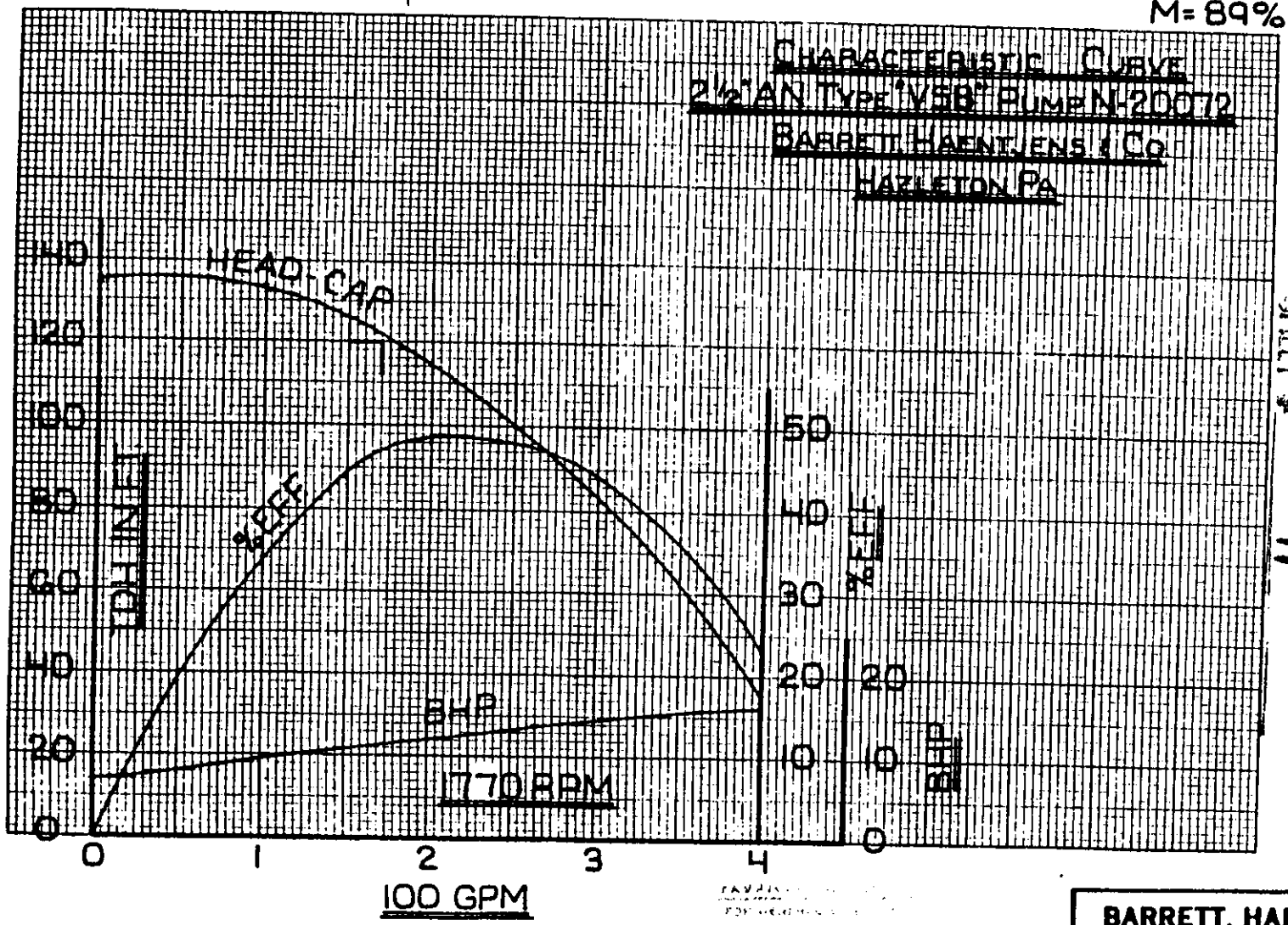

SHEET 11

NF 215216

JAN 2[illegible] 1986

CUSTOMER E.I. DUPONT DE NEMOURS & CO., INC.

ORDER No. AXC 7244W

METAL TAG AXC 7244W, (EN) Y348-160-1

BARRETT, HAENTJENS & CO.
HAZLETON, PA.

CHARACTERISTIC CURVE

DATE 12-11-85

C-20072

BARRETT, HAENTJENS & CO., HAZLETON, PA. 18201 U.S.A

2 1/2AN VSB PUMP SERIAL NO. N-20072

APR 30 1986

BHF 215216

SHEET # 12

$$\text{TORQUE} = \frac{\text{HORSEPOWER} \times \text{SPECIFIC GRAVITY} \times 5250}{\text{RPM}}$$

$$\text{TORQUE} = \frac{7.000 \times 1.010 \times 5250}{1770} = 21 \text{ FOOT POUNDS}$$

TORQUE vs. SPEED CURVE

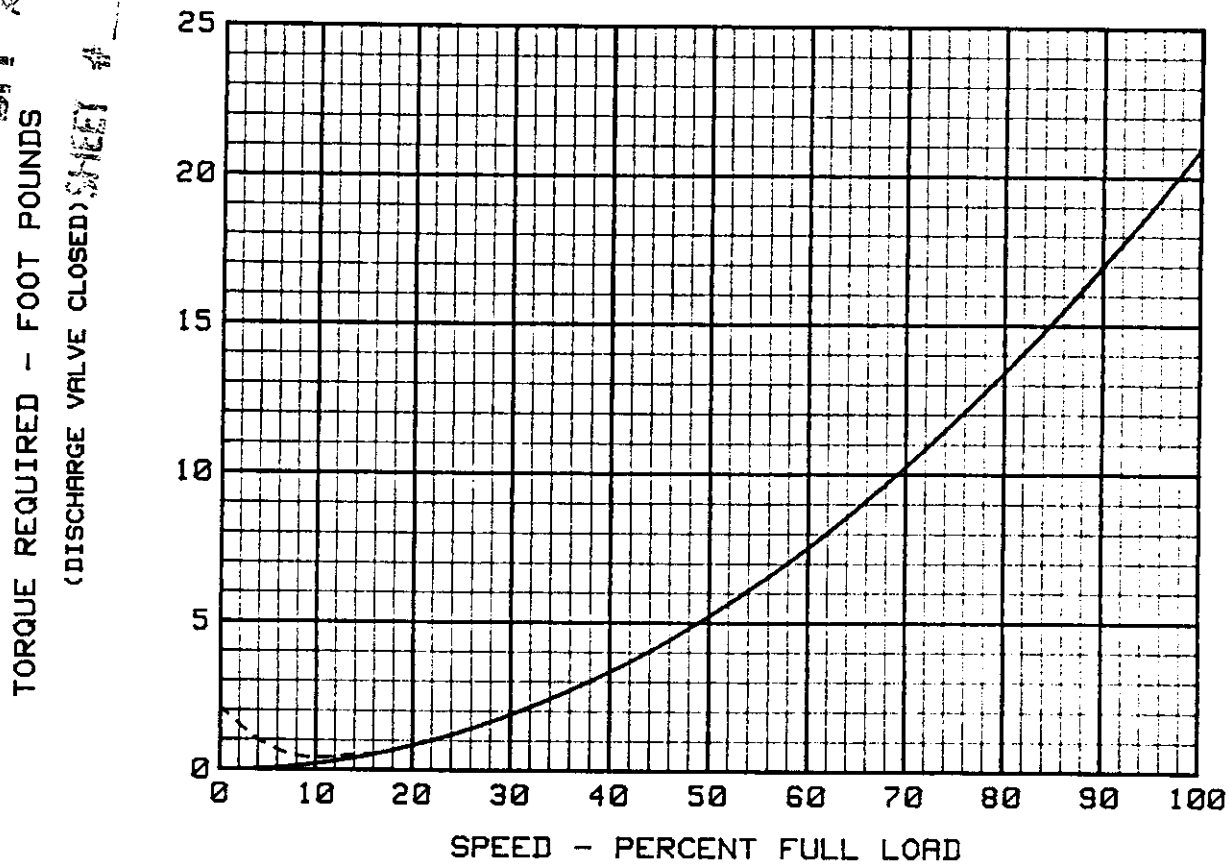

E.I. DuPONT DE NEMOURS & CO., INC.

AXC-7244W Y342-160-1

FABRICATION RELEASE
FOR GENERAL CONFORMITY
TO DIMENSIONS & MATERIAL
SPECIFIED

☒ APPROVED
☐ APPROVED AS NOTED
☐ NOT APPROVED

BY DU PONT FOR THIS ORDER
E. I. DU PONT DE NEMOURS & CO.
4/16/86
SIGNATURE DATE

HAZLETON
PUMPS

TYPICAL PUMP CURVE

WASTE TANK PUMPS

1) TANK 40/51 TRANSFER

CAS D15922 P15922 V15922-11.250"B-IMP D15989 P15989 V15989-4-11.000"T
M=89%

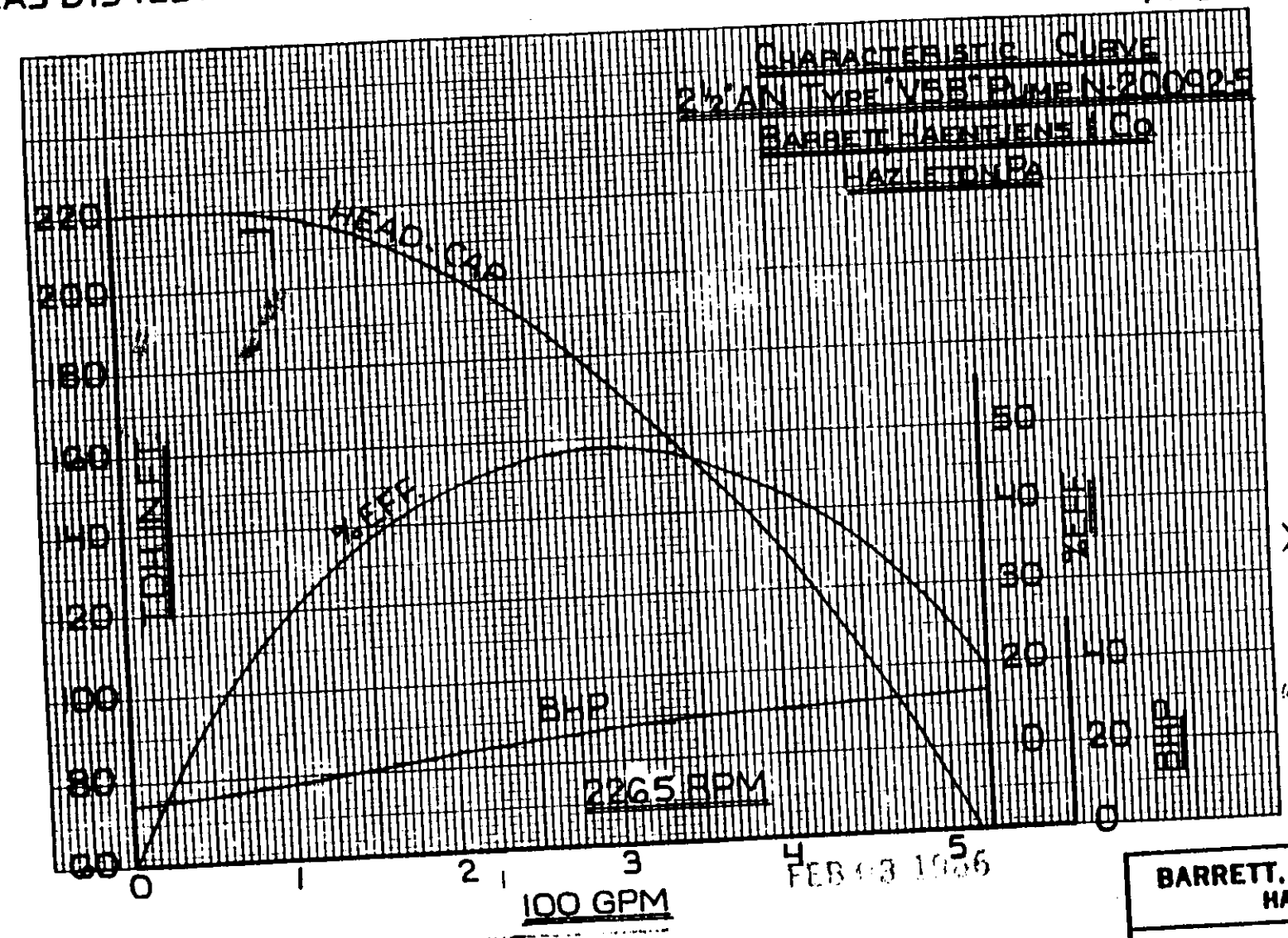

FEB 13 1986

CUSTOMER	E.I. DUPONT DE NEMOURS & CO., INC.
ORDER No.	AXC 7204W
TAG	AXC 7204W, (EN) Y340-9-1/2

PF 215571

SHELL # 10

BARRETT, HAENTJENS & CO.
HAZLETON, PA.

CHARACTERISTIC CURVE

DATE 12-11-85	C20092-5
DRAWN GM/DBV	

BARRETT, HAENTJENS & CO., HAZLETON, PA. 18201 U.S.A.

APR 30 1986

INF 215571

SHEET # 2215

2 1/2AN VSB PUMP SERIAL NO. N-20092-5

$$\text{TORQUE} = \frac{\text{HORSEPOWER} \times \text{SPECIFIC GRAVITY} \times 5250}{\text{RPM}}$$

$$\text{TORQUE} = \frac{14.500 \times 1.600 \times 5250}{2265} = 54 \text{ FOOT POUNDS}$$

TORQUE vs. SPEED CURVE

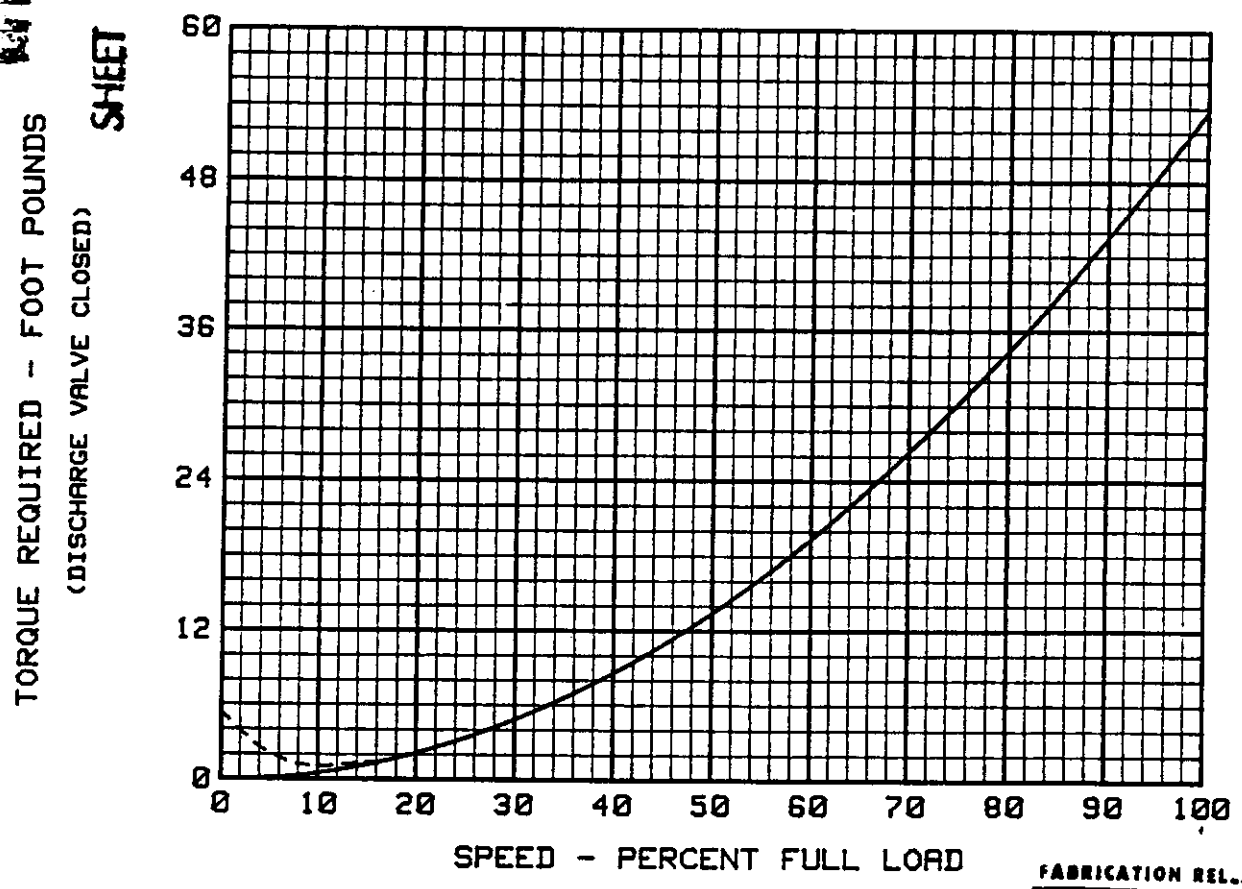

FABRICATION RELEASE
FOR GENERAL CONFORMITY TO DIMENSIONS & MATERIALS SPECIFIED
☑ APPROVED
☐ APPROVED AS NOTED
☐ NOT APPROVED
BY DU PONT FOR THIS ORDER
E. I. DU PONT DE NEMOURS & CO. —
SIGNATURE DATE
4-25-86

E.I. DuPONT DE NEMOURS & CO., INC.

RXC-7204W Y340-9-1 Y351-9-1
Y340-9-2 Y351-9-2

"TEMPORARY LOAN RETURN TO PRD CENTRAL FILES 703-A"

HAZLETON
PUMPS

4/16/86

TYPICAL PUMP CURVE

ITP PRECIPITATE REACTION STRIPPER PUMP

Goulds Ser. # 701D185-1-2
Customer: E. I. DuPont
P.O. # AXC-2894-W
Item# Y528-200-18/19
Serv: Column No. 1 Bottoms

DATE 10-5-84

REV. DATE 12-30-86 ISSUE #1 YDA

GOULDS PUMPS, INC.
SENECA FALLS NEW YORK 13148

CENTRIFUGAL PUMP CHARACTERISTICS

RPM 1750 CDK 3313-1

MODEL 3196
SIZE 1½x3-10
IMP. DWG. 100-593
PATTERN 54017
EYE AREA 6.5 in²
IMP DIA. 9¼"

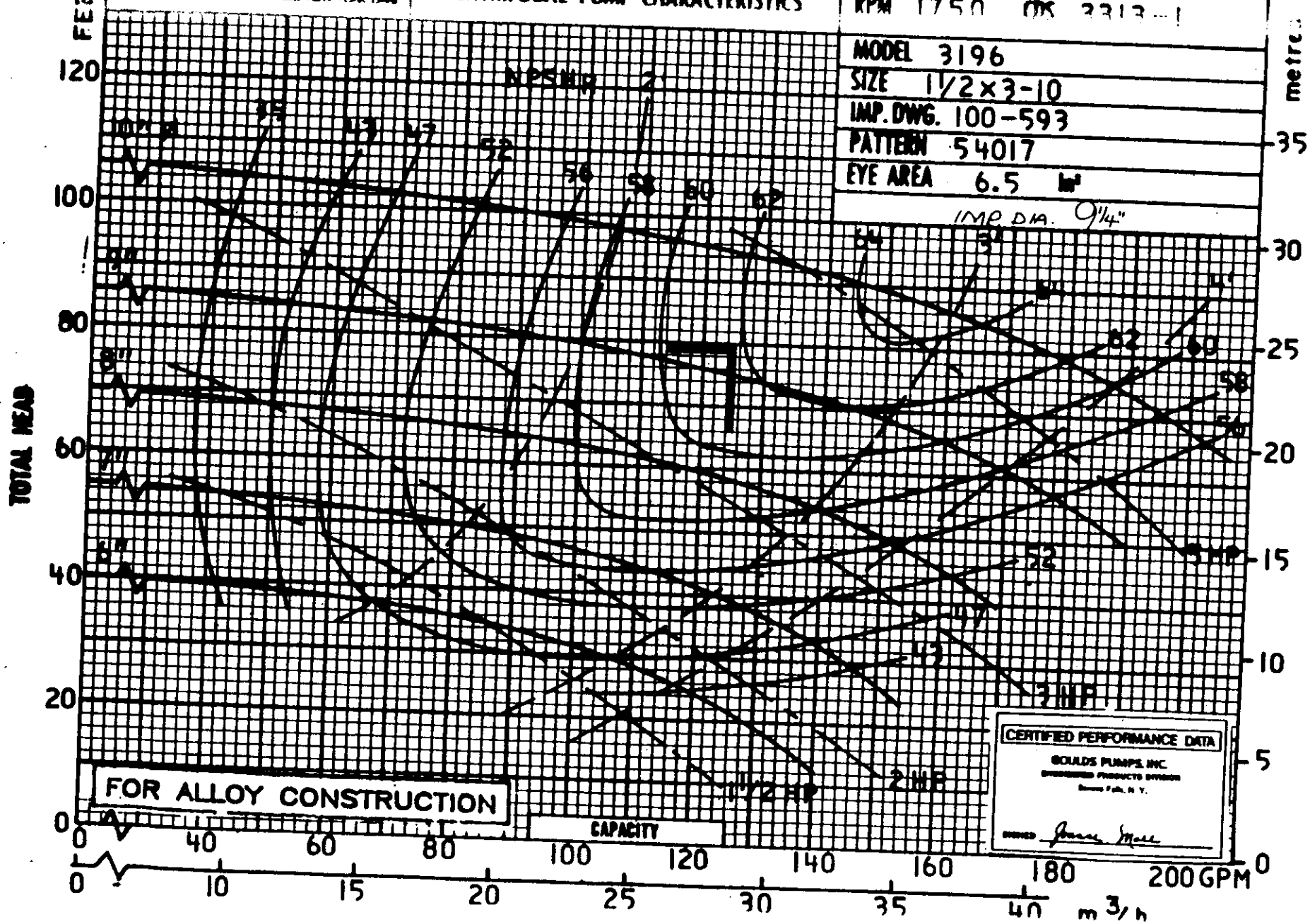

TYPICAL PUMP CURVE

ITP PRECIPITATE WASHING STRIPPER PUMP

DATE 4-15-82

REV. DATE 12-15-86 ISSUE #1 YDA

GOULDS PUMPS, INC.
SENECA FALLS, NEW YORK 13148

CENTRIFUGAL PUMP CHARACTERISTICS

RPM 1750 CDS 3039-1

MODEL 3196 MT

SIZE 1×2-10

IMP. DWG. B10009

PATTERN 56381

EYE AREA 4.9 in²

IMP. DIA. 8 1/8"

FOR ALLOY CONSTRUCTION

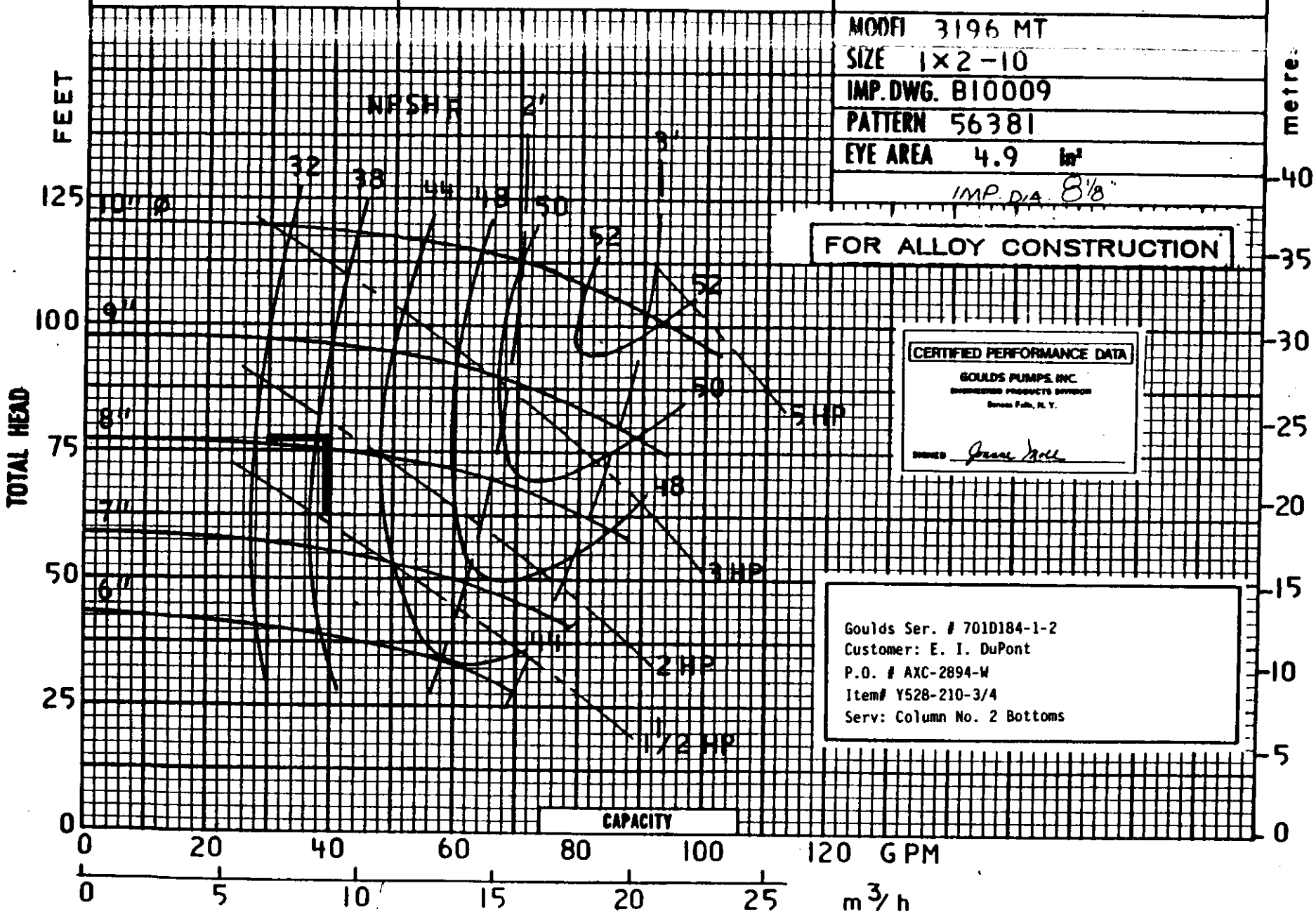

CERTIFIED PERFORMANCE DATA
GOULDS PUMPS, INC.
ENGINEERED PRODUCTS DIVISION
Seneca Falls, N. Y.
SIGNED

Goulds Ser. # 701D184-1-2
Customer: E. I. DuPont
P.O. # AXC-2894-W
Item# Y528-210-3/4
Serv: Column No. 2 Bottoms

TYPICAL PUMP CURVE

ITP HOLD TANK PUMP

PLANT: SAVANNAH RIVER
PROJECT: 953782
DU PONT P.O. AXC-6284-W
EN-No.: Y390-11-3

4-23-82 ISSUE
REV. DATE 3-17-78 ISSUE #3 B.E.F.

DATE 1-12-70

GOULDS PUMPS, INC.
SENECA FALLS NEW YORK 13148

CENTRIFUGAL PUMP CHARACTERISTICS

RPM	3500
CDS	2075-4
MODEL	3196 ST 5 1/4" IMP. DIA.
SIZE	1 X 1 1/2 - 6
IMP. DWG.	76777
PATTERN	56088
EYE AREA	3.14 in²

ROTAT 18°
FIG

FOR GENERAL CONFORMITY TO DIMENSIONS & MATERIALS SPECIFIED
[ ] APPROVED
[ ] APPROVED AS NOTED
[ ] NOT APPROVED
BY DU PONT FOR THIS USE
E. I. DU PONT DE NEMOURS & CO.
SIGNATURE

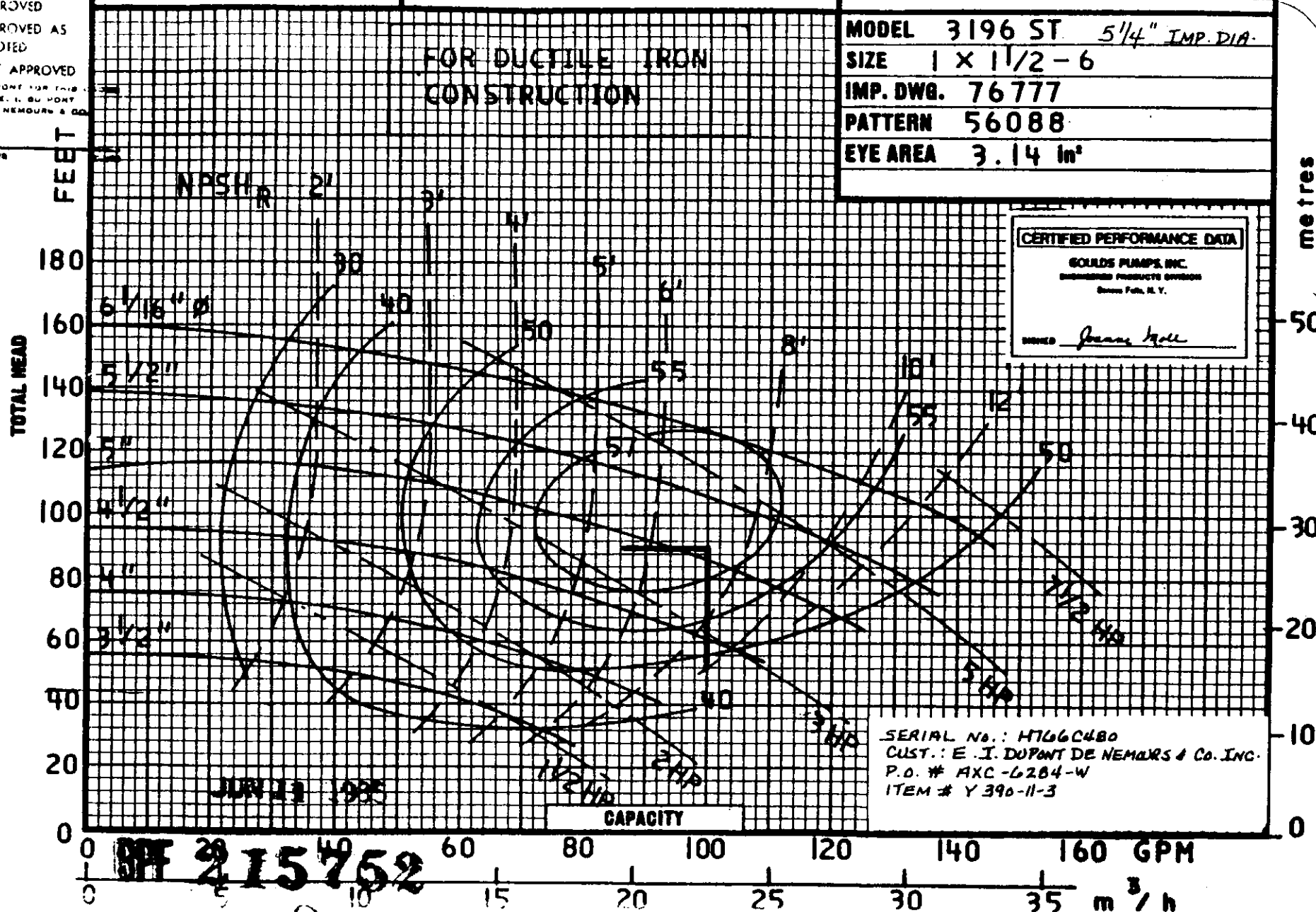

CERTIFIED PERFORMANCE DATA
GOULDS PUMPS, INC.
ENGINEERED PRODUCTS DIVISION
Seneca Falls, N.Y.
SIGNED Joanne Moll

SERIAL No.: H766C480
CUST.: E. I. DUPONT DE NEMOURS & Co. INC.
P.O. # AXC-6284-W
ITEM # Y 390-11-3

DOE 215752

SHEET # 9

TYPICAL PUMP CURVE

STANDARD SLURRY PUMP

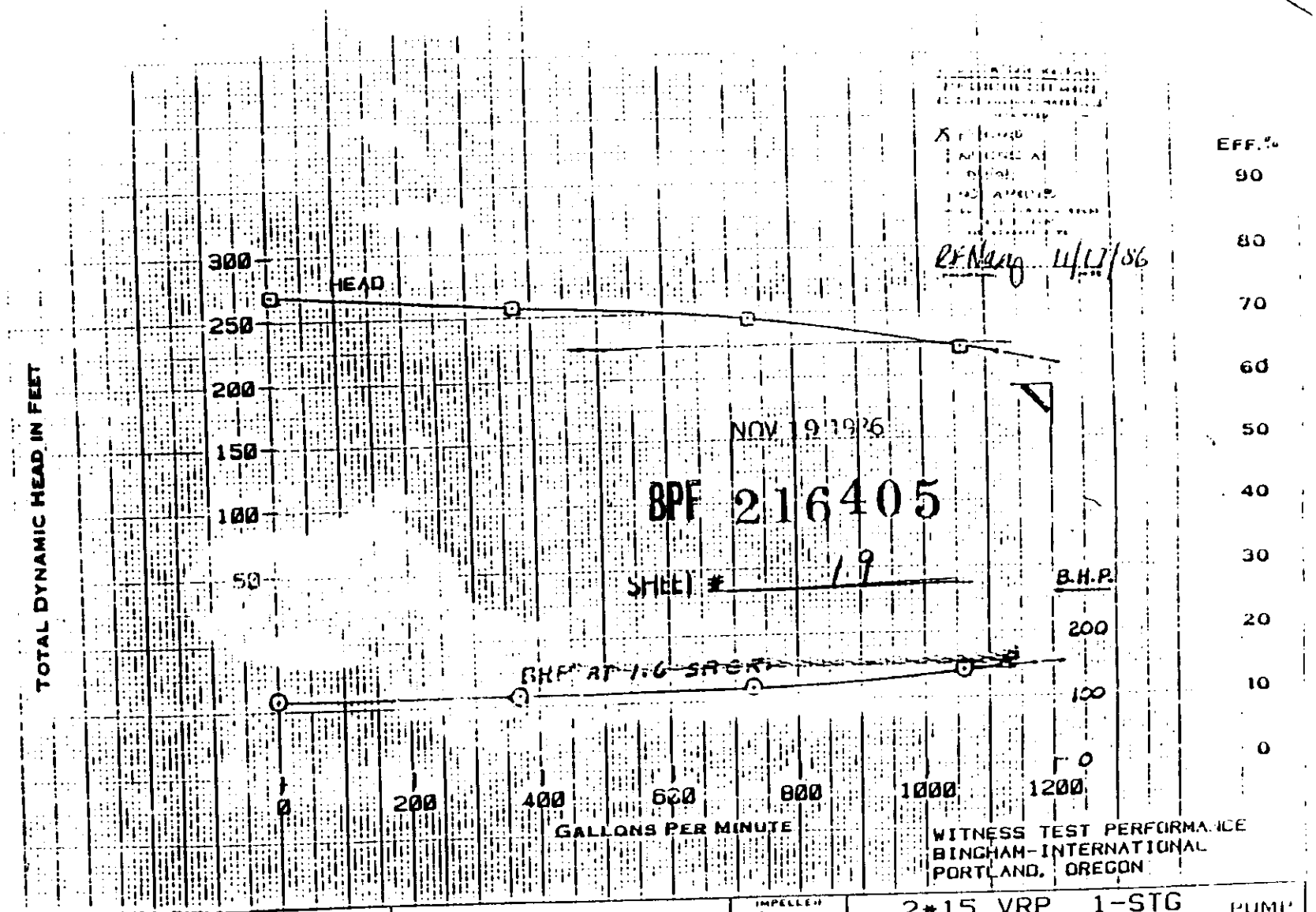

E. I. DUPONT DE NEMOURS
RADIOACTIVE SLUDGE
PO# AXC-82918
ITEM# Y-341-3-1

PUMP ENGINEERING DEPT
BINGHAM
10/31/86

IMPELLER MAX 15"	2*15 VRP 1-STG PUMP		
MIN "	DIA IMPELLER 15"	IMPELLER PATT 213VRP	1780 R P M
	NPSH REQUIRED	REFERENCE	CURVE NO 39836

TYPICAL PUMP CURVES

LOW SHEAR SLURRY PUMPS (4)

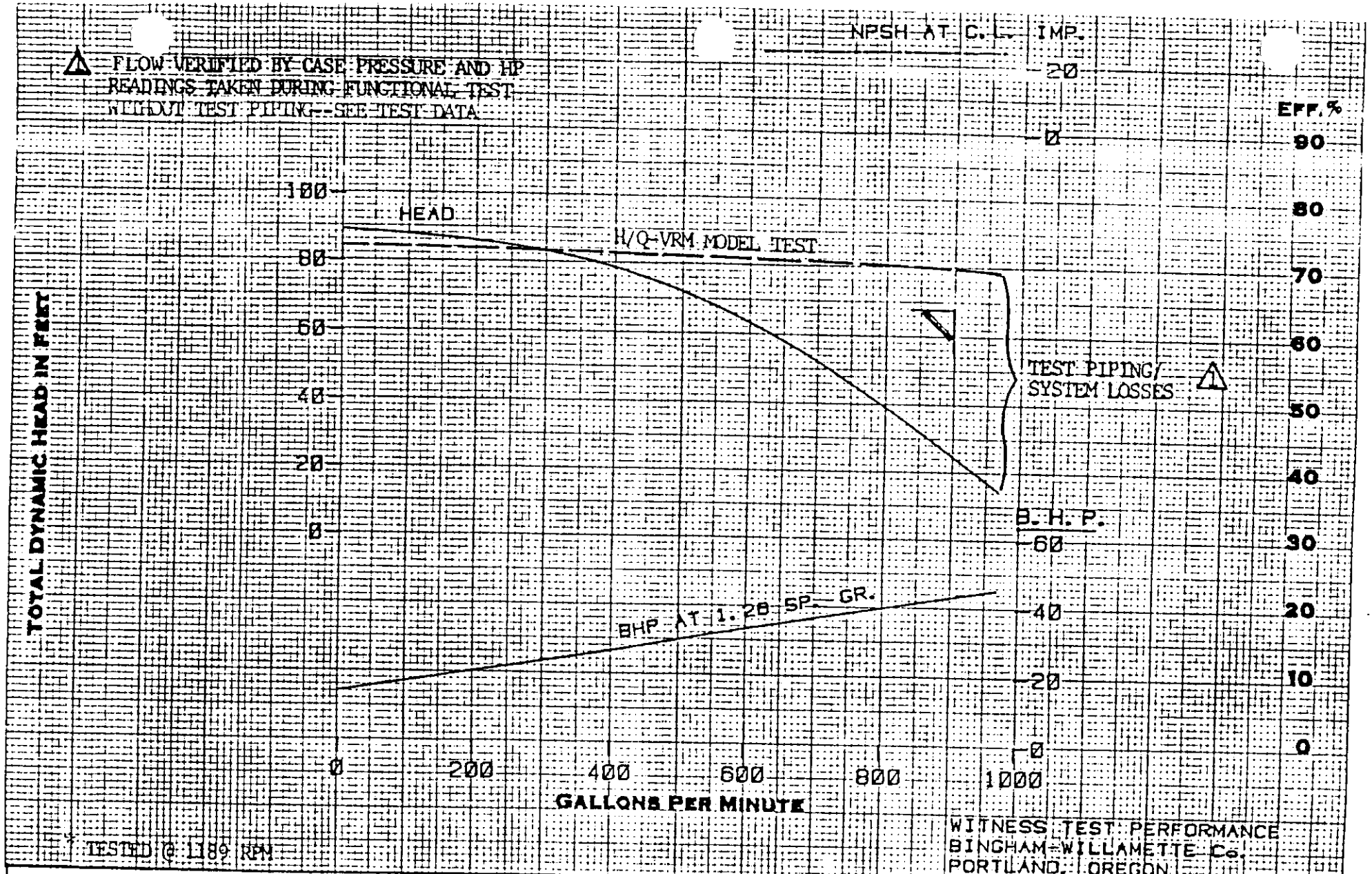

* TESTED @ 1189 RPM

E. I. DUPONT DE NEMOURS RADIOACTIVE SLURRY/LOW SHEAR PO# AXC-7318W ITEM# Y348-120-1 PUMP# 1C024	PUMP ENGINEERING DEPT. BINGHAM-WILLAMETTE COMPANY PORTLAND, OREGON & SHREVEPORT, LA. BINGHAM-WILLAMETTE LTD. VANCOUVER B.C. 6/13/66 SJS	IMPELLER MAX. DIA. 18" MIN. DIA. " EYE AREA SQ IN	4*18 VRM 1-STG PUMP		
			DIA. IMPELLER 18"	IMPELLER PATT. 413VR	900* R.P.M.
			1.62" DIA. DISCH. NOZZLES		CURVE No. 39786

Form No [redacted] 930-1

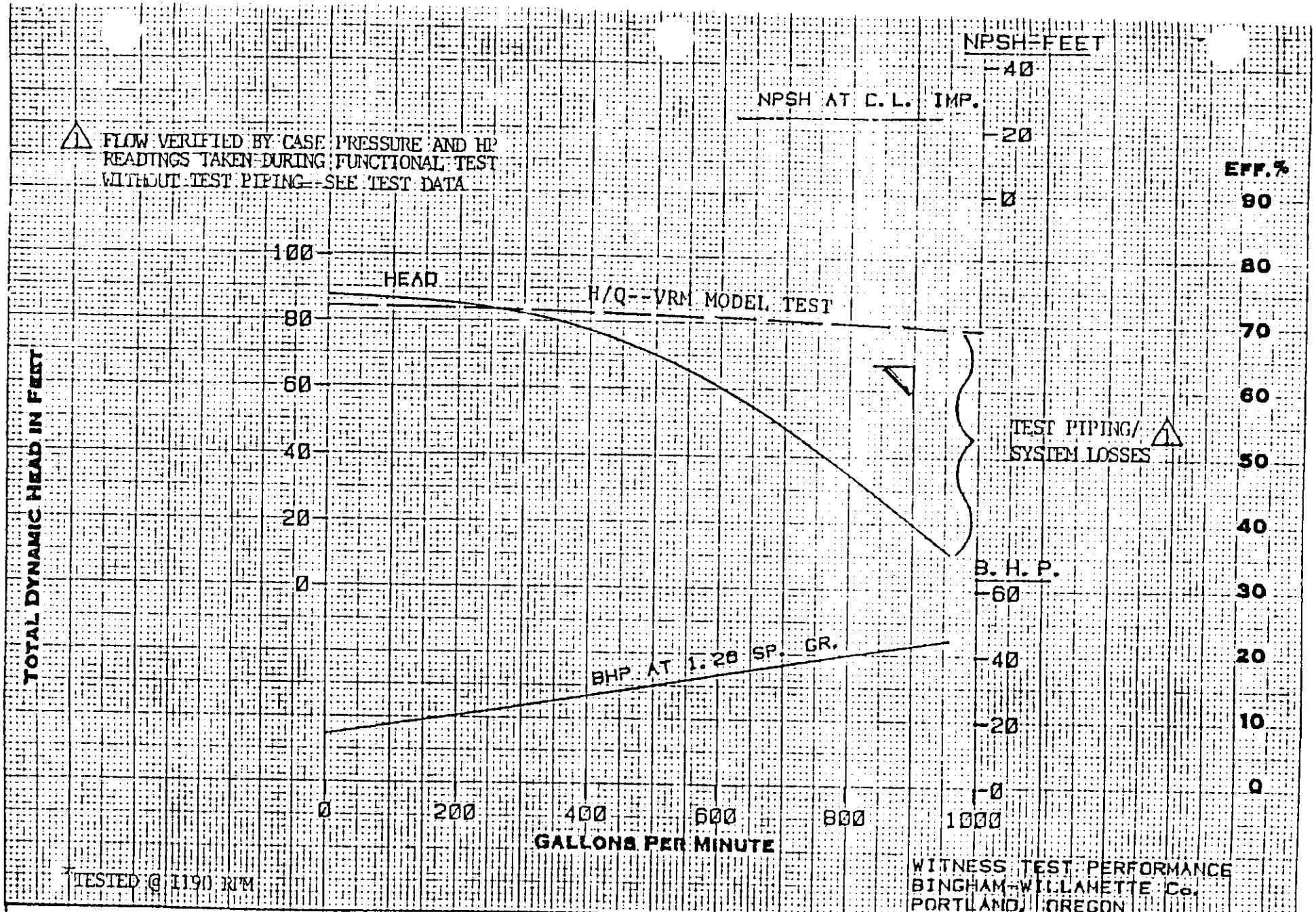

E. I. DUPONT DE NEMOURS RADIOACTIVE SLURRY/LOW SHEAR PO# AXC-7318W ITEM# Y346-130-1 PUMP# 1C025	PUMP ENGINEERING DEPT. BINGHAM-WILLAMETTE COMPANY PORTLAND OREGON & SHREVEPORT, LA. BINGHAM-WILLAMETTE LTD. VANCOUVER B.C. 6/25/86 S.IS	IMPELLER MAX. DIA. 18" MIN. DIA. " EYE SQ AREA IN²	4*18 VRM 1-STG PUMP		
			DIA. IMPELLER 18"	IMPELLER PATT. 413VR	900* R.P.M.
			1.62" DIA. DISCH. NOZZLES		CURVE No 39791

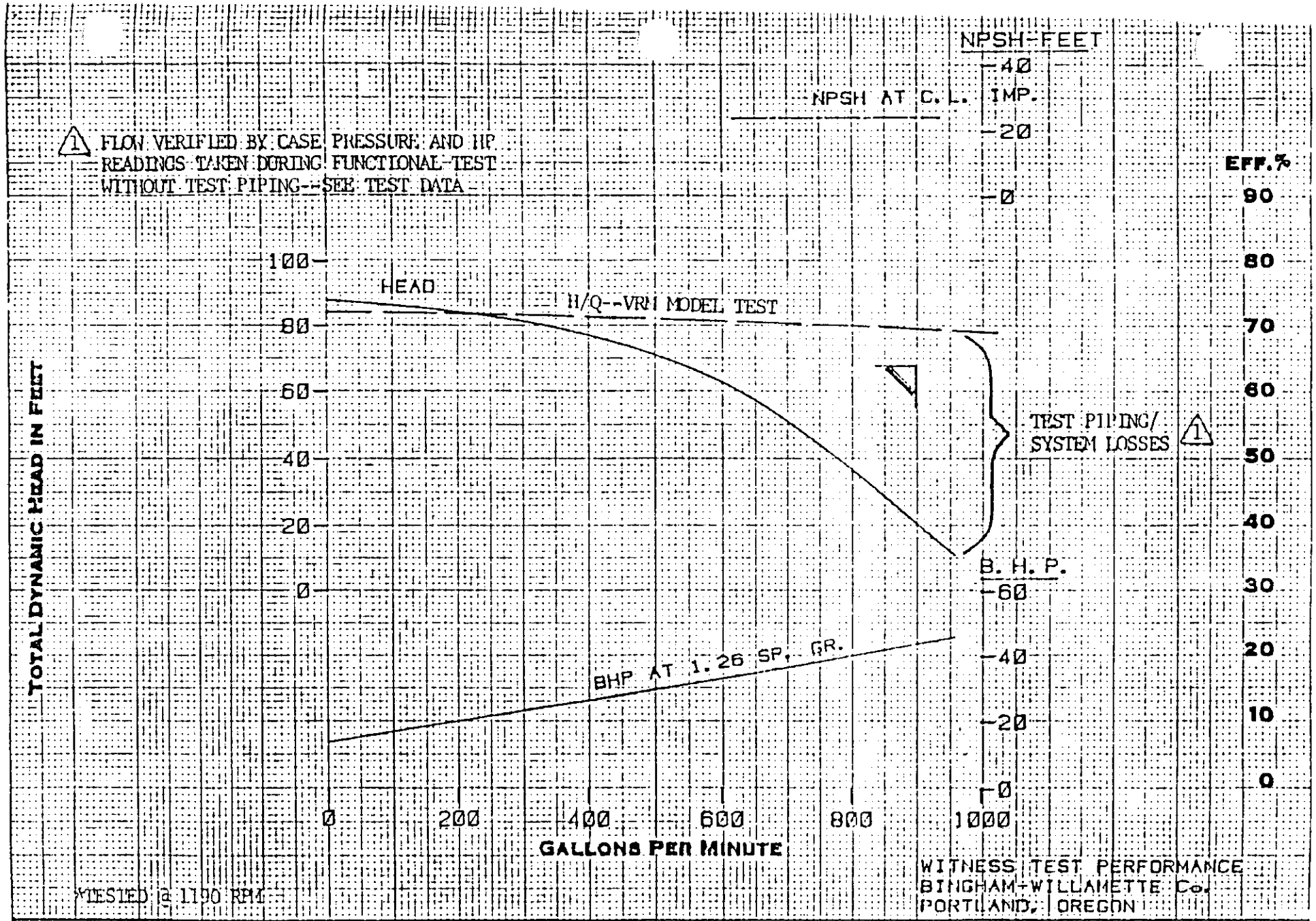

E. I. DUPONT DE NEMOURS RADIOACTIVE SLURRY/LOW SHEAR PO# AXC-7318W ITEM# Y348-110-1 PUMP# 10823	PUMP ENGINEERING DEPT. BINGHAM-WILLAMETTE COMPANY PORTLAND OREGON & SHREVEPORT LA BINGHAM-WILLAMETTE LTD. VANCOUVER B C CS 6/19/86	IMPELLER MAX. DIA. 18" MIN. DIA. " EYE SQ AREA IN	4*18 VRM 1-STG PUMP		
			DIA. IMPELLER 18"	IMPELLER PATT. 413VR	900* R.P.M.
			1.62" DIA. DISCH. NOZZLE		CURVE No 39789

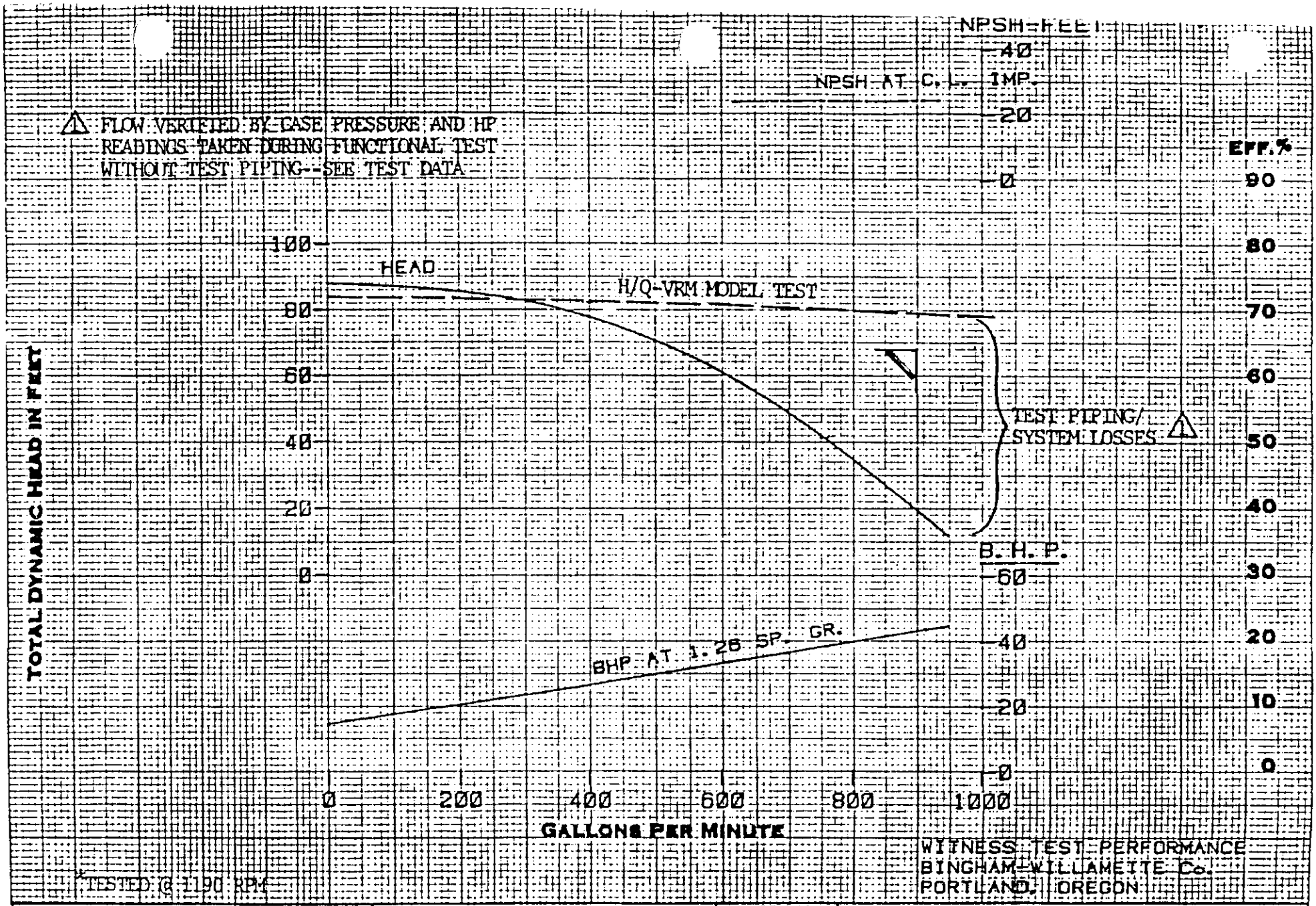

E. I. DUPONT DE NEMOURS RADIOACTIVE SLURRY/LOW SHEAR PO# AXC-7318W ITEM# Y348-100-1 PUMP# 1C022	PUMP ENGINEERING DEPT. BINGHAM-WILLAMETTE COMPANY PORTLAND OREGON & SHREVEPORT LA. BINGHAM-WILLAMETTE LTD. VANCOUVER, B.C. 6/12/86 CS	IMPELLER MAX. DIA. 18" MIN. DIA. " EYE AREA SQ IN	4*18 VRM 1-STG PUMP		
			DIA. IMPELLER 18"	IMPELLER PATT. 413VR	900* R.P.M.
			1.62" DIA. DISCH NOZZLES		CURVE NO. 39785

Form No. 930 1

TYPICAL PUMP CURVES

QUAD VOLUTE SLURRY PUMPS (4)

CHARACTERISTIC CURVE SHEET

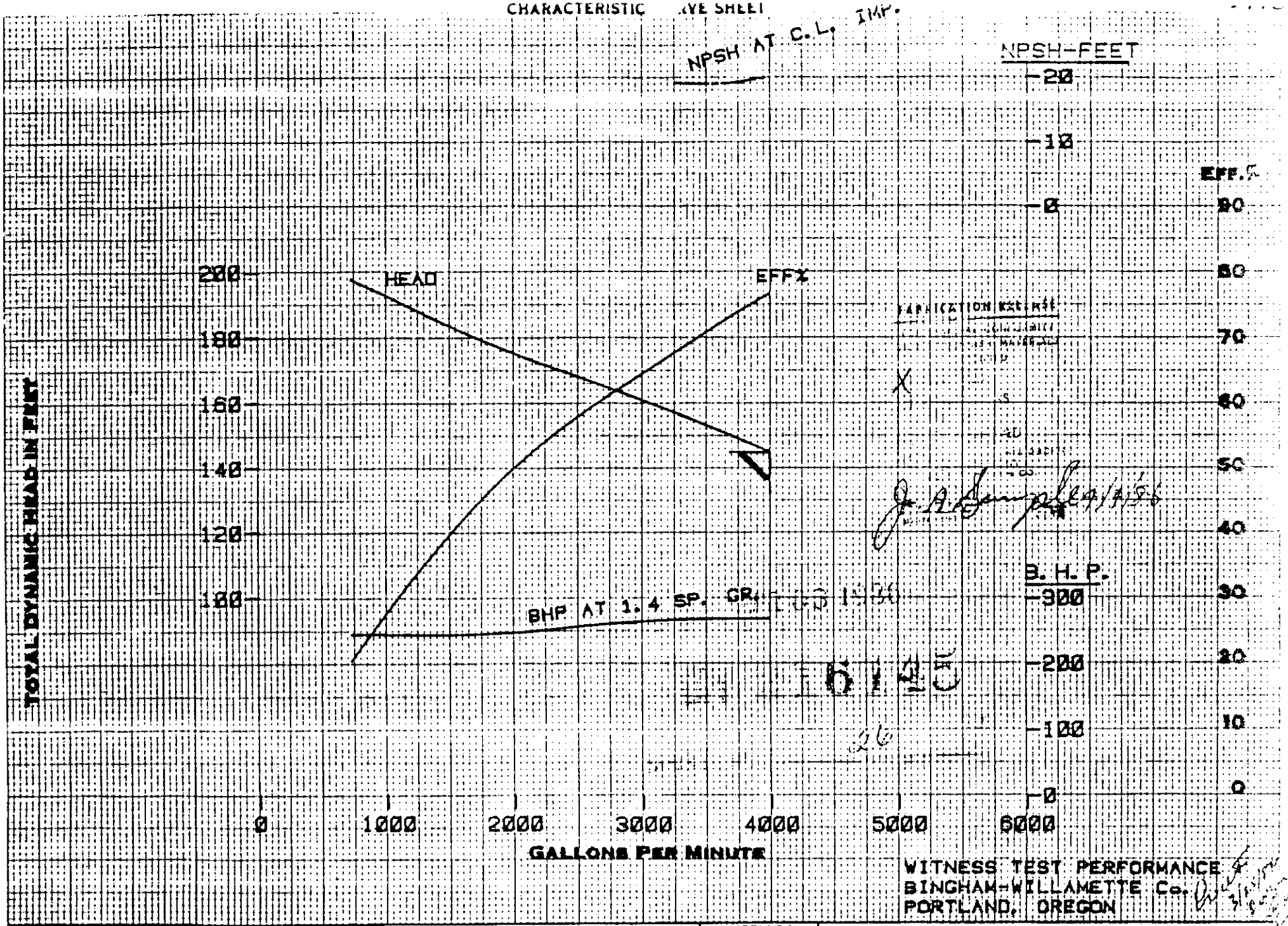

WITNESS TEST PERFORMANCE
BINGHAM-WILLAMETTE Co.
PORTLAND, OREGON

E. I. DUPONT DE NEMOURS RADIOACTIVE SLUDGE PO# AXC-7317W	PUMP ENGINEERING DEPT. BINGHAM-WILLAMETTE COMPANY PORTLAND OREGON & SHREVEPORT LA	IMPELLER MAX. DIA. 10.81"	3*11.5 VRP 1-STG PUMP		
		MIN. DIA "	DIA. IMPELLER 10.81"	IMPELLER PATT. 413VRP-4	2200 R.P.M.

CHARACTERISTIC CURVE SHEET

1719

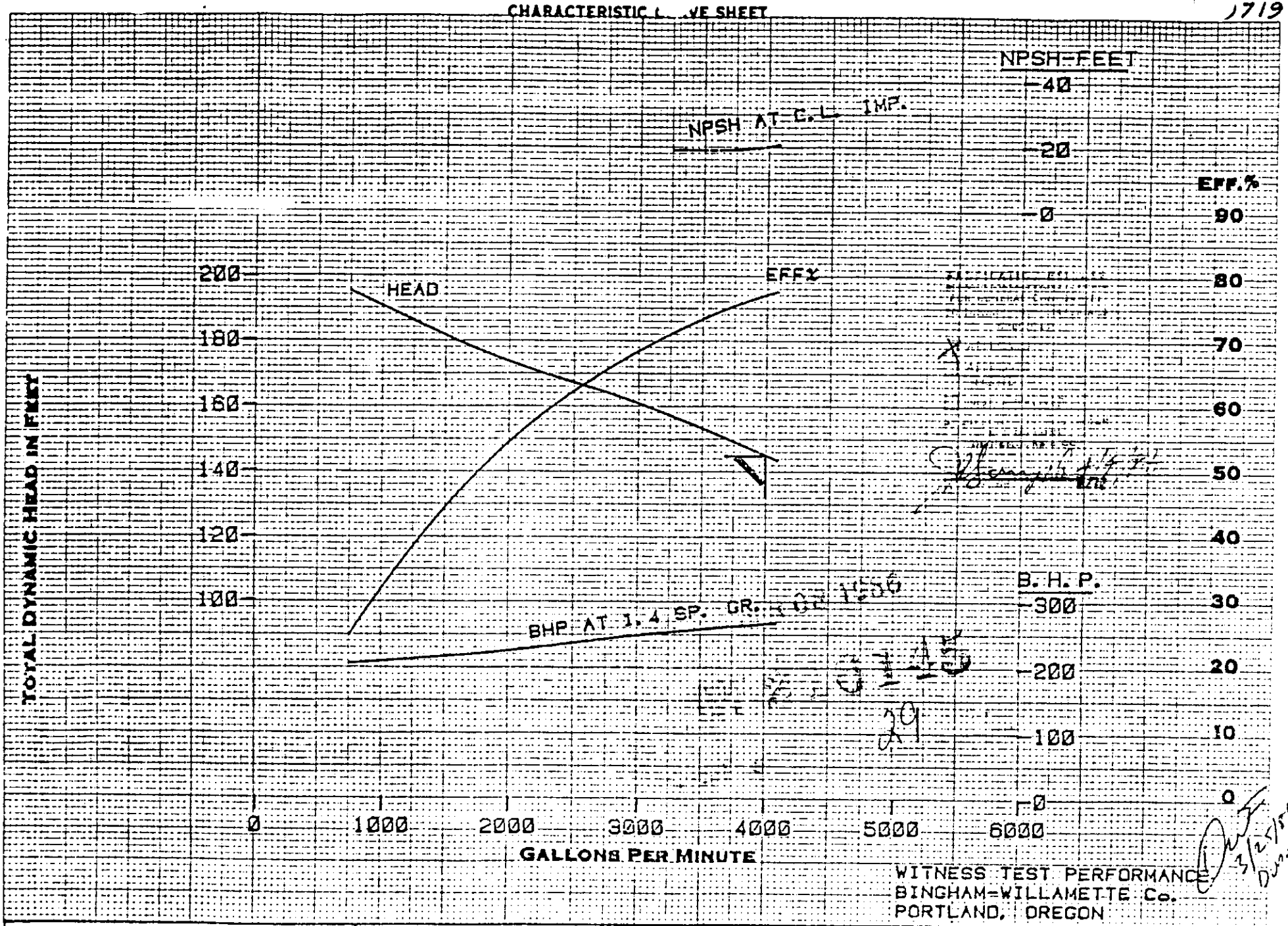

WITNESS TEST PERFORMANCE
BINGHAM-WILLAMETTE Co.
PORTLAND, OREGON

E. I. DUPONT DE NEMOURS RADIOACTIVE SLUDGE PO# AXC- 7317W	PUMP ENGINEERING DEPT. BINGHAM-WILLAMETTE COMPANY PORTLAND OREGON & SHREVEPORT, LA	IMPELLER MAX. DIA. 10.81" MIN. "	3*11.5 VRP 1-STG PUMP		
			DIA. IMPELLER 10.81"	IMPELLER PATT. 613VRP-4	2200 R.P.M.

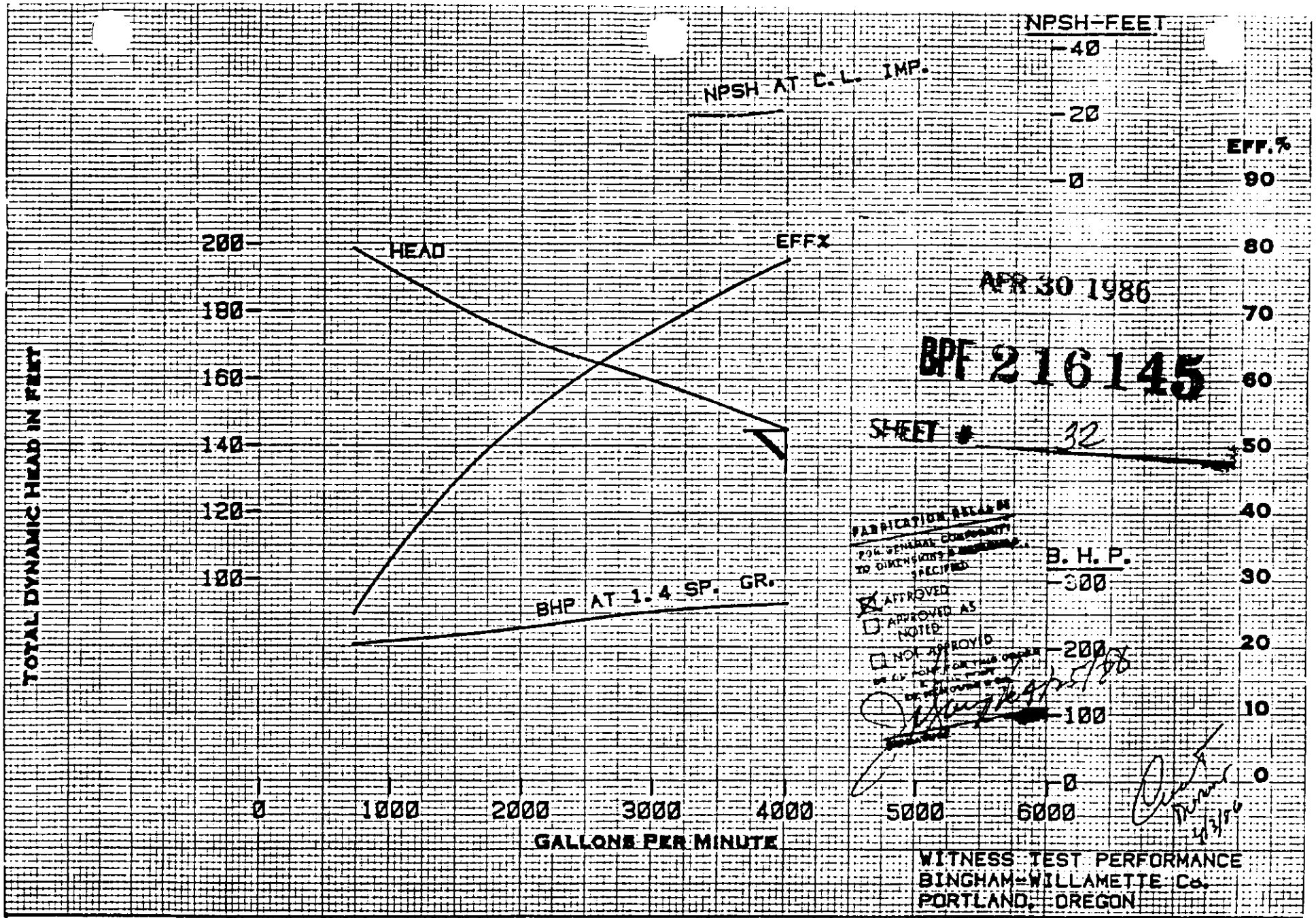

E. I. DUPONT DE NEMOURS RADIOACTIVE SLUDGE PO# AXC-7317W ITEM# Y349-120-1 PUMP# 1C828	PUMP ENGINEERING DEPT. BINGHAM-WILLAMETTE COMPANY PORTLAND, OREGON & SHREVEPORT, LA. BINGHAM-WILLAMETTE LTD. VANCOUVER B.C. 3/31/86	IMPELLER MAX. DIA. 10.81" MIN. DIA. " EYE AREA 60 SQ. IN.	3*11.5 VRP 1-STG PUMP		
			DIA. IMPELLER 10.81"	IMPELLER PATT. 413VRP-4	2200 R.P.M.
			N.P.S.H. REQUIRED	REFERENCE	CURVE No. 39725

SHT 32

Form No [redacted] 930-1

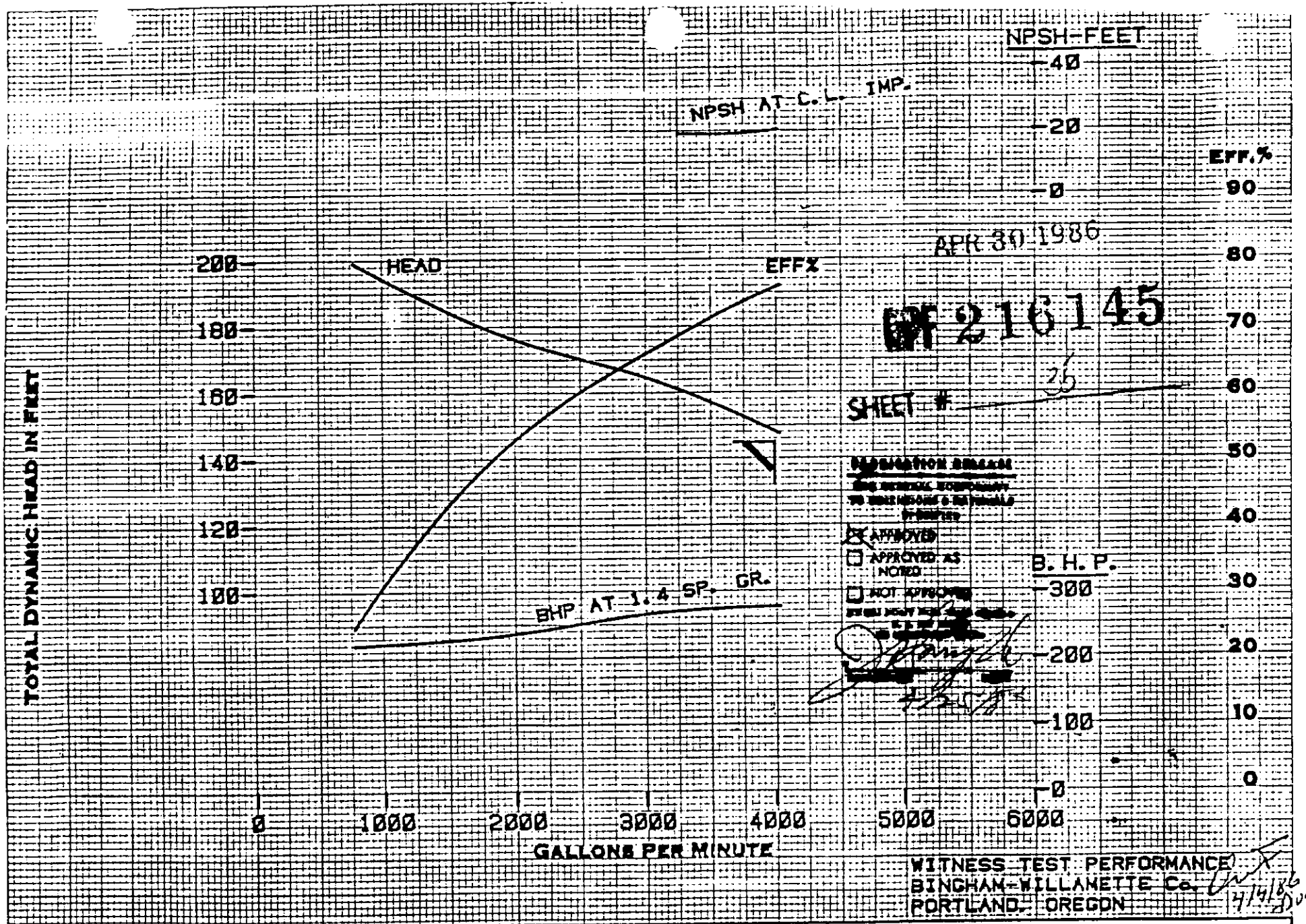

E. I. DUPONT DE NEMOURS
RADIOACTIVE SLUDGE
PO# AXC-7317V
ITEM# Y349-138-1
PUMP# 1C821

PUMP ENGINEERING DEPT.
BINGHAM-WILLAMETTE COMPANY
PORTLAND, OREGON & SHREVEPORT, LA.
BINGHAM-WILLAMETTE LTD.
VANCOUVER, B.C.
4/4/86

IMPELLER MAX. DIA. 10.81"	3*11.5 VRP 1-STG PUMP		
MIN. DIA. "	DIA. IMPELLER 10.81"	IMPELLER PATT. 413VRP-4	2200 R.P.M.
EYE AREA 60 SQ. IN.	N.P.S.H. REQUIRED	REFERENCE	CURVE No. 39727

TYPICAL PUMP CURVE

LOW SHEAR LONG SHAFT TRANSFER PUMP

BARRETT, HAENTJENS & CO., HAZLETON, PA. 18201 U.S.A.

PREDICTED PERFORMANCE CURVE

6"A TYPE VSR PUMP @ 1010 RPM

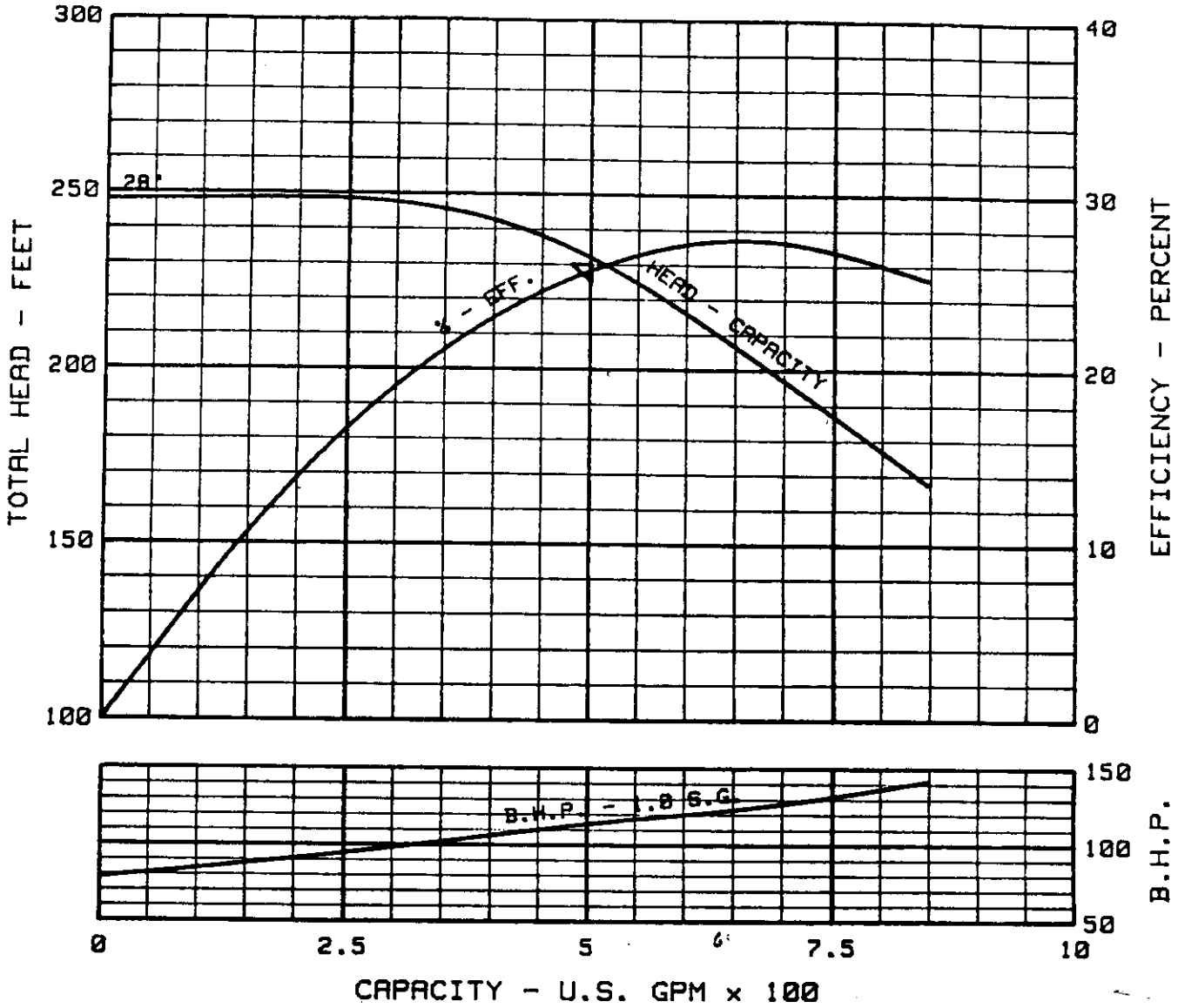

20041

HAZLETON PUMPS

2/20/86

APPENDIX B

WASTE TANK CAPACITY CALCULATIONS

Independent Verification

The information used to prepare these waste tank capacity calculations was based upon design drawings provided by the Westinghouse Savannah River Company. This information was reviewed under my direction/supervision and the pertinent information was used to prepare these calculations. Based upon the information provided to me by the Westinghouse Savannah River Company, I certify that, to the best of my knowledge, information, and belief, these calculations are accurate.

Richard L Stegen

Registered Professional Engineer

SC Registration No.

SOUTH CAROLINA
REGISTERED PROFESSIONAL ENGINEER
No. 12633
RICHARD L. STEGEN

Type I Waste Tanks

A. Tank Dimensions: 75' diameter
23' fill height

B. Tank Volume (nominal):

$$V = (75'/2)^2 \times \pi \times 23' \times 7.48 \text{ gals/ft}^3$$
$$= 760{,}050 \text{ gals}$$

C. Tank Volume (subtracted space) - concrete roof support, cooling coils, upper & lower knuckle plate.

Concrete Roof Support (12 supports @ 2' diameter each)

$$V = 12 \times (2'/2)^2 \times \pi \times 23' \times 7.48 \text{ gals/ft}^3$$
$$V = 6{,}486 \text{ gals}$$

Lower Knuckle Plate (1' radius curve)

$$V = [(1')^2 - (1')^2 \times \pi/4] \times [(75'\pi + 73'\pi) \times 2/3] \times 7.48 \text{ gal/ft}^3$$
$$V = 498 \text{ gals}$$

Cooling coils (2" diameter, approximately 4 miles)

$$V = 4 \text{ miles} \times 5{,}280 \text{ ft/mi} \times \pi \times (1/12'' \text{ ft})^2 \times 7.48 \text{ gal/ft}^3$$
$$V = 3{,}450 \text{ gals}$$

Upper Knuckle Plate (4' radius curve)

V = area x tank circumference

$$\text{Sin}_1 = 2.5'/4'$$
$$_1 = 38.7°$$

$$\text{Tan } 38.7° = 2.5/x$$
$$x = 3.12$$

Rectangle Area $= 4\ (2.5')$
$= 10 \text{ ft}^2$

Circle Area $= 1/2\ (2.5)(3.12)$
$= 3.9 \text{ ft}^2$

Area of Sector $= \pi\ (4)^2 \times 38.7/360$
$= 5.4 \text{ ft}^2$

Area of liquid in knuckle = 10 - 3.9 - 5.4 = 0.70 ft^2

Volume in knuckle = 2π (75'/2) (0.70 ft^2)
= 165 ft^3 x 7.48 gal/ft^3
= 1,234 gals

D. Tank Capacity (nominal)

V = 760,050 - 6,486 - 498 - 3,450 - 1,234

V = 748,382 gals

Type II Waste Tanks

A. Tank Dimensions: 85' diameters
25.5 fill height

B. Tank Volume (nominal):

$V = (85'/2)^2 \times \pi \times 25.5' \times 7.48\ gals/ft^3$
$V = 1{,}082{,}354$ gals.

C. Tank Volume (Subtracted spaced) - concrete roof support, upper & lower knuckle plate, cooling coils.

Concrete Roof Support (1 support @ 6'-10" diameter + flared capital)

$V = (6.83'/2)^2 \times \pi \times 25.5' + (9.75')^2\ (6.83'/2)$
$V = 1{,}259\ ft^3 \times 7.48\ gal/ft^3$
$V = 9{,}417$ gals.

Cooling Coils (2" diameter, approximately 4 miles)

$V = 4\ miles \times 5{,}280\ ft/mi \times \pi \times (1/12")^2 \times 7.48\ gal/ft^3$
$V = 3{,}450$ gals.

Lower Knuckle Plate (1' radius curve)

$V = [(1')^2 - (1')^2\ \pi/4] \times [[85'\pi + 83'\pi] \times 2/3] \times 7.48\ gal/ft^3$
$V = 565$ gals

Upper Knuckle Plate (4' radius curve)

(see Type I Waste Tanks for area calculations)
Area of liquid in knuckle = $0.70\ ft^2$

Volume in knuckle $= 2\pi\ (85'/2)\ (0.70\ ft^2) \times 7.48\ gal/ft^2$
$= 1{,}398$ gals.

D. Tank Capacity (nominal)

$V = 1{,}082{,}354 - 9{,}417 - 3{,}450 - 1{,}398$

<u>V = 1,067,524 gals.</u>

Type III Waste Tanks

A. Tank Dimensions: 85' diameters
31' fill height

B. Tank Volume (nominal):

$$V\text{-}Ah = (85\ ft/2)^2 \times \pi \times 31\ ft.$$
$$= 175{,}906\ ft^3 \times 7.48\ gal/ft^3$$
$$= 1{,}315{,}803\ gal$$

C. Tank Volume (Subtracted space) - concrete roof support, upper knuckle plate, lower knuckle plate.

Concrete Roof Support (1 support @ 6'-10" diameter + flared capital)

$$V = \pi\ (6.75'/2)^2\ (31.5') + 1/2\ (8.0416 - 1.5)^2\ (16.583)(2\pi)$$
$$V = 3356.681\ ft^3 \times 7.48\ gal/ft^3$$
$$V = 25{,}108\ gals.$$

Lower Knuckle Plate (1' radius curve)

$$V = [(1')^2 - (1')^2\ (\pi/4)] \times [85'\pi + 83'\pi]\ (2/3)]$$
$$V = 75.5\ ft^3 \times 7.48\ gals/ft^3$$
$$V = 565\ gals$$

Cooling Coils (2" diameter, approximately 4 miles)

$$V = 4\ miles \times 5{,}280\ ft/mile \times \pi \times (1/12"\ ft)^2 \times 7.48\ gal/ft^3$$
$$V = 3{,}450\ gals.$$

Upper Knuckle Plate (4' radius curve)

V = area x tank circumference

$$Sin_1 = 2'/4'$$
$$_1 = 30° = {}_2$$

$$Tan\ 30° = 2/x$$
$$x = 3.46$$

Rectangle Area = 8 ft^2

Circle Area $= \pi\ (4)^2 = 50.265\ ft^2$

Area of Sector $= \pi\ (4)^2 \times 30/360$
$= 4.2\ ft^2$

Area of liquid in knuckle = 8 ft^2 - 1/2(2)(3.46) - 4.2
= 0.34 ft^2

Volume in knuckle = 2π (85'/2) (0.34 ft^2) = 90.8 ft^3
= 90.8 ft^3 x 7.48 gals/ft^3
= 679 gals.

D. Tank Capacity (nominal)

V = 1,315,803 - 25,108 - 565 - 3,450 - 679

V = 1,286,000 gals

Type IV Waste Tanks

A. Tank Dimensions: 85' diameter
32.5' fill height

B. Tank Volume (nominal):

$$V\text{-}Ah = (85\ ft/2)^2 \times \pi \times 32.5\ ft.$$
$$= 184421.3\ ft^3 \times 7.48\ gals/ft^3$$
$$= 1379471\ gals.$$

C. Tank Volume (subtracted space) - lower knuckle plate only.

Lower Knuckle plate (1' radius curve)

$$V = [(1\ ft)^2 - (1\ ft)^2 \times \pi/4] \times [(85\ \pi + 83\ \pi)(2/3)]$$
$$V = (0.215) \times (351.9)$$
$$V = 75.5\ ft^3 \times 7.48\ gal/ft^3$$
$$V = 565\ gals$$

D. Tank Capacity (nominal)

$$V = 1379471 - 565$$

$$\underline{V = 1,378,900\ gals.}$$

APPENDIX C

FFA ASSESSMENT REPORT

See Report Titled Assessment Report
Phase I for the In-Tank
Precipitation Treatment Facility
May 1991