MF

ENVIRONMENTAL PERMITS LOG SHEET

PERMIT TYPE IND. WASTEWATER PROJECT NO.

TITLE "AS BUILT" F-AREA HIGH LEVEL RADIOACTIVE WASTE TANK FARM (H- AREA ALSO COVERED UNDER THIS PERMIT)

I.D. NO.	W-0517	AREA: F-Area	SPONSORING ORG. HLWEC
ENTRY DATE	1/3/91	CUSTODIAL ORG.	HLWO
PERMIT CUSTODIAN	Dale R. Osborne	ENV. COORD.	Dale R. Osborne
ACTUAL DATE TO EPD		DATE TO DOE	
FORECASTED DATE TO REGULATOR		ACTUAL DATE TO REGULATOR	7/8/91
CONSTRUCTION PERMIT NO.	17424-IW	DATE REQ'D TO START CONST.	N/A
CONSTRUCTION APPROVAL DATE	1/25/93	CONST. START DATE	unknown
OPERATING PERMIT NO.	17424-IW	CONST. START EXP. DATE	1/25/94
OPERATING APPROVAL DATE	3/3/93	CONST. COMPLETE EXP. DATE	1/1/98
OPERATING PERMIT EXP. DATE	N/A	PERMIT STATUS	Operational
Construction Special Conditions?	◉ Yes ○ No	PERMITTING AGENCY	SCDHEC
Operating Special Conditions?	◉ Yes ○ No		

SPECIAL CONDITIONS:

C1. Permittee shall maintain at the permitted facility an Operating & Maintenance Manual for the WTP which shall be made available for on-site review during normal working hours. SEE PERMIT FOR MORE DETAILS.

C2. Certified operator of appropriate grade shall perform routine daily TP inspections. Records of inspections shall be kept, maintained, and made available for on-site review. SEE PERMIT FOR MORE DETAILS.

C3. Develop & implement a BMP Plan to I.D. & control the discharge of significant amounts of oils & hazardous & toxic substances listed in 40 CFR, Part 117 & Tables II & III of Appendix D to 40 CFR, Part 122. SEE PERMIT FOR MORE DETAILS.

C4. No chemicals (process or otherwise) shall be added to the waste tanks which will alter the composition of the F/H ETF effluent from that which was evaluated for the NPDES permit.

C5. The addition (not replacement) of new piping and chemical feed systems, even though related to the F/H Tank Farm process, shall not be considered normal operation if the piping and/or feed systems are to be located outside the tank farm boundary.

C6. Once waste removal begins on a tank with a leak or crack and the waste is removed to a level below the lowest known leak or crack, that level shall become the maximum operating level of the tank and shall not be exceeded unless the exceedance is a temporary result of the waste removal process.

C7. No tank that leaks or has leaked shall be used for waste receipt w/o prior approval from this Dept. This condition does not apply to the necessary addition of waste for waste removal purposes. Also, this condition does not apply to the use of Tank 13, the 242-H Evaporator Feed Tank, provided the construction and utilization of the Replacement Evaporator, 242-25H, and its associated feed tank do not deviate significantly from the State-approved schedule.

C8. W/i 60 days from the effective date of this permit the Permittee shall submit to this office a report containing the QA/QC procedures followed during the installation of the liner extension w/i the ITP hold tank area.

C9. Permittee shall maintain contingency plans or emergency procedures in place to respond to any known emergency situation with the potential to negatively impact human health or the environment. The plans and/or procedures shall be updated as necessary to include new information or changing conditions.

SEE PERMIT FOR SPECIAL CONDITIONS C10. - C12 AND SPECIAL OPERATING CONDITIONS.

OTHER COMMENTS:

1. In Tank Precipitation (ITP) also included under this project.
2. On 3/15/93 EPD submitted modification package for the bypassing of the existing Auxiliary Pump Pit (APP) in order to accommodate future implementation of the "Latewash Facility"; SCDHEC approved the modification on 4/30/93.
3. On 3/18/93 EPD submitted to SCDHEC QA/QC procedures for installation of liner extension within ITP hold tank area as required by Special Condition #8.
4. On 4/1/93 EPD requested that SCDHEC remove the tank farms from RCRA Interim Status since the industrial wastewater permits had been obtained.
5. On 9/14/93, EPD provided SCDHEC with the 241-16F Evaporation High Heat Waste Processing Plan Overview.
6. On 10/26/93 EPD submitted to SCDHEC the In-Tank Precipitation Latewash Facility modification package to allow process modifications within the existing Auxiliary Pump Pit (W-0629).
7. On 3/1/94, SCDHEC letter was issued that deleted the F/H Tank Farms from RCRA Interim Status.
8. On 1/4/95, SCDHEC approved request to return Tank 24 to active service.
9. On 6/26/95 EPD requested that SCDHEC reclassify the permitted operator requirement to "N/A"; on 8/14/95 SCDHEC approved the

ENVIRONMENTAL PERMITS LOG SHEET

2

PERMIT TYPE IND. WASTEWATER PROJECT NO.

TITLE "AS BUILT" H-AREA HIGH LEVEL RADIOACTIVE WASTE TANK FARM (F- AREA ALSO COVERED UNDER THIS PERMIT)

I.D. NO.	W-0517	AREA: H-Area	SPONSORING ORG. HLWEC
ENTRY DATE	5/10/91	CUSTODIAL ORG.	HLWO
PERMIT CUSTODIAN	Tom Syfert (7-0320) 742-6G, Rm 11	ENV. COORD.	Tom Syfert (7-0320) 742-6G, Rm 11
ACTUAL DATE TO EPD		DATE TO DOE	
FORECASTED DATE TO REGULATOR		ACTUAL DATE TO REGULATOR	7/8/91
CONSTRUCTION PERMIT NO.	17424-IW	DATE REQ'D TO START CONST.	N/A
CONSTRUCTION APPROVAL DATE	1/25/93	CONST. START DATE	unknown
OPERATING PERMIT NO.	17424-IW	CONST. START EXP. DATE	1/25/94
OPERATING APPROVAL DATE	3/3/93	CONST. COMPLETE EXP. DATE	1/1/98
OPERATING PERMIT EXP. DATE	N/A	PERMIT STATUS	Operational
Construction Special Conditions?	◉ Yes ○ No	PERMITTING AGENCY	SCDHEC
Operating Special Conditions?	◉ Yes ○ No		

SPECIAL CONDITIONS:

C1. Permittee shall maintain at the permitted facility an Operating & Maintenance Manual for the WTP which shall be made available for on-site review during normal working hours. SEE PERMIT FOR MORE DETAILS.

C2. Certified operator of appropriate grade shall perform routine daily TP inspections. Records of inspections shall be kept, maintained, and made available for on-site review. SEE PERMIT FOR MORE DETAILS.

C3. Develop & implement a BMP Plan to I.D. & control the discharge of significant amounts of oils & hazardous & toxic substances listed in 40 CFR, Part 117 & Tables II & III of Appendix D to 40 CFR, Part 122. SEE PERMIT FOR MORE DETAILS.

C4. No chemicals (process or otherwise) shall be added to the waste tanks which will alter the composition of the F/H ETF effluent from that which was evaluated for the NPDES permit.

C5. The addition (not replacement) of new piping and chemical feed systems, even though related to the F/H Tank Farm process, shall not be considered normal operation if the piping and/or feed systems are to be located outside the tank farm boundary.

C6. Once waste removal begins on a tank with a leak or crack and the waste is removed to a level below the lowest known leak or crack, that level shall become the maximum operating level of the tank and shall not be exceeded unless the exceedance is a temporary result of the waste removal process.

C7. No tank that leaks or has leaked shall be used for waste receipt w/o prior approval from this Dept. This condition does not apply to the necessary addition of waste for waste removal purposes. Also, this condition does not apply to the use of Tank 13, the 242-H Evaporator Feed Tank, provided the construction and utilization of the Replacement Evaporator, 242-25H, and its associated feed tank do not deviate significantly from the State-approved schedule.

C8. W/i 60 days from the effective date of this permit the Permittee shall submit to this office a report containing the QA/QC procedures followed during the installation of the liner extension w/i the ITP hold tank area.

C9. Permittee shall maintain contingency plans or emergency procedures in place to respond to any known emergency situation with the potential to negatively impact human health or the environment. The plans and/or procedures shall be updated as necessary to include new information or changing conditions.

SEE PERMIT FOR SPECIAL CONDITIONS C10. - C12 AND SPECIAL OPERATING CONDITIONS.

OTHER COMMENTS:

1. In Tank Precipitation (ITP) also included under this project.
2. On 3/15/93 EPD submitted modification package for the bypassing of the existing Auxiliary Pump Pit (APP) in order to accommodate future implementation of the "Latewash Facility"; SCDHEC approved the modification on 4/30/93.
3. On 3/18/93 EPD submitted to SCDHEC QA/QC procedures for installation of liner extension within ITP hold tank area as required by Special Condition #8.
4. On 4/1/93 EPD requested that SCDHEC remove the tank farms from RCRA Interim Status since the industrial wastewater permits had been obtained.
5. On 9/14/93, EPD provided SCDHEC with the 241-16F Evaporation High Heat Waste Processing Plan Overview.
6. On 10/26/93 EPD submitted to SCDHEC the In-Tank Precipitation Latewash Facility modification package to allow process modifications within the existing Auxiliary Pump Pit (W-0629).
7. On 3/1/94, SCDHEC letter was issued that deleted the F/H Tank Farms from RCRA Interim Status.
8. On 5/30/95 EPD requested DHEC approval for the RHLWE overhead line tie-in to the ETF process sewer. On 6/14/95, DHEC app. the request.
9. On 6/26/95 EPD requested that SCDHEC reclassify the permitted operator requirement to "N/A"; on 8/14/95 SCDHEC approved the

ENVIRONMENTAL PERMITS LOG SHEET

3

PERMIT TYPE IND. WASTEWATER **PROJECT NO.**

TITLE "AS BUILT" H-AREA HIGH LEVEL RADIOACTIVE WASTE TANK FARM (F-AREA ALSO COVERED UNDER THIS PERMIT)

I.D. NO. W-0517 **AREA:** H-Area

OTHER COMMENTS:

1. In Tank Precipitation (ITP) also included under this project.
2. On 3/15/93 EPD submitted modification package for the bypassing of the existing Auxiliary Pump Pit (APP) in order to accommodate future implementation of the "Latewash Facility"; SCDHEC approved the modification on 4/30/93.
3. On 3/18/93 EPD submitted to SCDHEC QA/QC procedures for installation of liner extension within ITP hold tank area as required by Special Condition #8.
4. On 4/1/93 EPD requested that SCDHEC remove the tank farms from RCRA Interim Status since the industrial wastewater permits had been obtained.
5. On 9/14/93, EPD provided SCDHEC with the 241-16F Evaporation High Heat Waste Processing Plan Overview.
6. On 10/26/93 EPD submitted to SCDHEC the In-Tank Precipitation Latewash Facility modification package to allow process modifications within the existing Auxiliary Pump Pit (W-0629).
7. On 3/1/94, SCDHEC letter was issued that deleted the F/H Tank Farms from RCRA Interim Status.
8. On 5/30/95 EPD requested DHEC approval for the RHLWE overhead line tie-in to the ETF process sewer. On 6/14/95, DHEC app. the request.
9. On 6/26/95 EPD requested that SCDHEC reclassify the permitted operator requirement to "N/A"; on 8/14/95 SCDHEC approved the request.
10. On 1/14/97 EPD requested SCDHEC approval to Transfer approximately 350,000 gallons of wastewater from Tank 17 to Tanks 5 and/or 6. On 1/14/97 SCDHEC approved the request..
11. On 5/5/97 EPD submitted a permit modification package to SCDHEC to allow installation of a valve box near Tank 50 for rerouting ETF and ITP flows. On 5/15/97 SCDHEC approved the permit modification.
12. On 12/2/97 EPD requested a completion expiration date extension to 9/30/99 (from 1/1/98). On 12/18/97, SCDHEC approved a completion expiration date extension to 6/30/98 (instead of 9/30/99).
13. On 5/12/98 SCDHEC granted an extension request of the construction deadline for the RHLWE until June 30, 1999. The approval was contingent upon not impacting the High Level Waste Tank Removal Plan and Closure Schedule. (GHL)

Chuck

W-0517

D H E C
PROMOTE PROTECT PROSPER
2600 Bull Street
Columbia, SC 29201-1708

DEC 22

December 18, 1997

Mr. J. W. Cook, Manager
CERCLA, Geological, and Permitting Section
Environmental Protection Department
Westinghouse Savannah River Company
Bldg. 742-A Rm 196
Aiken, SC 29808-0001

RE: Construction Permit #17424-IW Extension
Delay of Replacement High Level Waste Evaporator Construction Completion
Savannah River Site
Aiken County

Dear Mr. Cook:

This Office has reviewed your December 2, 1997 request for an extension to the above-referenced construction permit. Since this evaporator will be part of the high level waste system, the Department would like time to evaluate the impact of the evaporator construction schedule on the High Level Waste Closure Schedule. Therefore, at this time, this Office will grant an extension of the construction deadline until June 30, 1998. Upon finalization of the tank closure schedule, this construction deadline may be adjusted accordingly to incorporate the evaporator into the closure schedule.

Should you have any questions or comments, please contact me at 803-734-0819.

Sincerely,

Melinda G. Vickers

Melinda G. Vickers
Environmental Engineer Associate
Industrial, Agricultural and Storm Water Permitting Division

mgv

cc: Lower Savannah EQC
Keith Collinsworth, BLWM/FFA Section

D H E C
PROMOTE PROTECT PROSPER
2600 Bull Street
Columbia, SC 29201-1708

MAY 20 1997

May 15, 1997

Mr. J.W. Cook
CERCLA, Geological and Permitting Section
Environmental Protection Department
Westinghouse Savannah River Company
P.O. Box 616
Aiken, SC 29802

Re: SRS/F&H Area HLW Tank Modification
Construction Permit #17,424-IW
Aiken County

Dear Mr. Cook:

This Office has reviewed your May 6, 1997 submittal for the modification of Construction Permit #17,424-IW for the F/H Area High Level Waste Tank Farm. A stainless steel valve box will be constructed west of Tank 50 to serve as a diversion mechanism for flow originating at the F/H Effluent Treatment Facility and for ITP filtrate. Approximately 300 linear feet of 2, 3 and 4 inch diameter core piping, and 6 inch diameter jacket piping, associated piping, valves and appurtenances will be installed to reroute the flows. The addition of this equipment is hereby approved. This letter shall serve as a modification to Construction Permit #17,424-IW.

If you should have any questions feel free to call me at (803) 734-4393.

Sincerely,

Christina Hackett

Christina Hackett
Environmental Engineer Associate
Industrial, Agricultural, and Storm Water
Permitting Division

cc: Lower Savannah EQC District

D H E C

PROMOTE PROTECT PROSPER

2600 Bull Street
Columbia, SC 29201-1708

MAY 13 1997

May 7, 1997

Mr. J.W. Cook
CERCLA, Geological and Permitting Section
Environmental Protection Department
Westinghouse Savannah River Company
P.O. Box 616
Aiken, SC 29802

Re: SRS/F&H Area HLW Tank Modification
Aiken County

Dear Mr. Cook:

This Section received an engineering submittal on the above referenced project on 05/06/97. At this time it appears it will be approximately fifteen (15) days before your project is picked up for technical review.

This project has not been assigned to a staff engineer and additional comments may be forthcoming following a technical review. It should be noted that the following items are required in order to complete your submittal:

1. The plans and/or specifications were not properly stamped or signed by the engineer.

Please return the above noted items as soon as possible as this would help to expedite the review time.

Also, certifications have been requested from the entities involved in our permitting process such the Council of Governments and our District Office.

If you should have any questions feel free to call me at (803) 734-4393.

Sincerely,

Christina Hackett

Christina Hackett
Environmental Engineer Associate
Industrial, Agricultural, and Storm Water
Permitting Division

W-0517

South Carolina
DHEC
Department of Health and Environmental Control
2600 Bull Street, Columbia, SC 29201-1708

Commissioner: Douglas E. Bryant

Board: John H. Burriss, Chairman
William M. Hull, Jr., MD, Vice Chairman
Roger Leaks, Jr., Secretary
Richard E. Jabbour, DDS
Cyndi C. Mosteller
Brian K. Smith
Rodney L. Grandy

Promoting Health, Protecting the Environment

January 14, 1997

Mr. J.W. Cook, Manager
CERCLA, Geological and Permitting Section
Environmental Protection Department
Westinghouse Savanah River Company
Building 742-A, Rm 196
Aiken, SC 29808-0001

Re: Transfer of High Level Waste Tank 17 Contents
SRS
Aiken County

Dear Mr. Cook:

This Office has reviewed your request to transfer approximately 350,000 gallons of wastewater from Tank 17 to Tanks 5 and/or 6. So that Tank 17 may be readied for closure and to avoid future delays related to high level waste removal and tank closure, this Office hereby approves the transfer of this wastewater to Tanks 5 and/or 6 as stated in your January 14, 1997 letter to this Office.

Should you have any questions or comments, please contact me at 803-734-0819.

Sincerely,

Melinda G. Vickers

Melinda G. Vickers
Environmental Engineer Associate
Industrial, Agricultural, and Storm Water Permitting Division

cc: Lower Savannah EQC
Keith Collinsworth, BSHWM w/Jan 14, 1997 letter

recycled paper

W-0517

South Carolina
DHEC
Department of Health and Environmental Control
2600 Bull Street, Columbia, SC 29201

Commissioner: Douglas E. Bryant

Board: John H. Burriss, Chairman
William M. Hull, Jr., MD, Vice Chairman
Roger Leaks, Jr., Secretary
Richard E. Jabbour, DDS
Cyndi C. Mosteller
Brian K. Smith
Rodney L. Grandy

Promoting Health, Protecting the Environment

RECEIVED
AUG 21 1995
ENVIRONMENTAL P
WESTINGHOUSE SA

August 14, 1995

Mr. W. L. Payne, Principal Scientist
Surface Water, Wetlands, and Land Protection Group
Environmental Protection Department
Westinghouse Savannah River Company
Bldg. 742-A
Aiken, SC 29802

RE: Wastewater Treatment Plant Classification for Specialized Facilities at SRS
SRS/General
Aiken County

Dear Mr. Payne:

This Office has reviewed your request for reclassification of specialized nuclear waste storage, transfer, handling, and stabilization facilities to remove certified operator requirements. Based on the nature of the operations at these facilities, this Office agrees that certified wastewater treatment plant operators are not required for these nuclear waste facilites.

Therefore, this letter hereby modifies the following construction permits to remove the given classifications for the noted facilities:

Facility	Permit #	Classification	Operator
H-Area Tank 50	14,520	N/A	N/A
F&H Area Process Sewers	14,624	N/A	N/A
H to Z Area Transfer Line	14,338	N/A	N/A
DWPF Vitrification	16,783	N/A	N/A
Latewash Facility	17,596-IW	N/A	N/A
Z-Area Saltstone	12,683-IW	N/A	N/A
F&H Tank Farms including H to S area Transfer Line and DWPF Low Point Pump Pit	17,424-IW	N/A	N/A

Should you have questions or comments, please contact Melinda Vickers of my staff at (803) 734-0819.

Sincerely,

Marion F. Sadler, Jr., Director
Industrial and Agricultural Wastewater Division

MFS/mgv
cc: Lower Savannah EQC

recycled paper

South Carolina
DHEC
Department of Health and Environmental Control
2600 Bull Street, Columbia, SC 29201

Commissioner: Douglas E. Bryant

Board: John H. Burriss, Chairman
Sandra J. Molander, Secretary
Richard E. Jabbour, DDS
William M. Hull, Jr., MD
Roger Leaks, Jr.

Promoting Health, Protecting the Environment

June 14, 1995

Mr. W. D. Dunaway
Westinghouse Savannah River Company
Permitting Field Support Group
Environmental Protection Division
P. O. Box 616
Aiken, SC 29802

RE: Construction Permit #17,424-IW Modification
SRS/H-Area
Aiken County

Dear Mr. Dunaway:

This Office has reviewed of your May 30, 1995 submittal for modification to Construction Permit #17,424-IW for the F/H Area High Level Radioactive Tank Farms. Approximately 1200 linear feet of jacketed 2-inch process piping and two 50 gpm transfer pumps will be installed to convey wastewater from the overhead receiver tanks to an existing manhole which leads to the F/H ETF. The addition of this equipment is hereby approved.

Should you have questions or comments, please contact me at (803) 734-0819.

Sincerely,

Melinda G. Vickers

Melinda G. Vickers
Environmental Engineering Associate
Industrial and Agricultural Wastewater Division

mgv

cc: Lower Savannah EQC

recycled paper

South Carolina
DHEC
Department of Health and Environmental Control
2600 Bull Street, Columbia, SC 29201

Commissioner: Douglas E. Bryant

Board: Richard E. Jabbour, DDS, Chairman
Robert J. Stripling, Jr., Vice Chairman
Sandra J. Molander, Secretary

John H. Burriss
William M. Hull, Jr., MD
Roger Leaks, Jr.
Burnet R. Maybank, III

Promoting Health, Protecting the Environment

January 4, 1995

Mr. W.D. Dunaway, Manager
Permitting Field Support Group
Environmental Protection Department
Westinghouse Savannah River Co.
P.O. Box 616
Aiken, SC 29802

Re: Reactivation Of High Level Waste Tank 24
SRS H-Area
Aiken County

Dear Mr. Dunaway:

This letter is in response to your September 8, 1994 letter requesting concurrence with the plan to return Tank 24 to active service. Based on our review, this office concurs with the plan provided the following conditions are met:

1. Tank 24 shall receive only low activity waste.

2. All applicable requirements of the Federal Facilities Agreement and Construction Permit #17,424-IW shall be complied with.

If you should have any questions please call.

Sincerely,

Larry E. Arrington
Industrial & Agricultural
Wastewater Division

cc: Lower Savannah EQC

Post-it® Fax Note 7671	Date	# of pages ▶ 3
To CHUCK HAMES	From G LASKA	
Co./Dept.	Co.	
Phone #	Phone # 5-8838	
Fax # 8-8091	Fax #	

South Carolina
DHEC
Department of Health and Environmental Control
2600 Bull Street, Columbia, SC 29201

Commissioner: Douglas E. Bryant

Board: Richard E. Jabbour, DDS, Chairman
Robert J. Stripling, Jr., Vice Chairman
Sandra J. Molander, Secretary
John H. Burriss
William M. Hull, Jr., MD
Roger Leaks, Jr.
Burnet R. Maybank, III

Promoting Health, Protecting the Environment

RECEIVED
SEP 20 1994
ENVIRONMENTAL PROTECTION DEPT.
WESTINGHOUSE SAVANNAH RIVER CO.

September 15, 1994

Mr. W.D. Dunaway, Manager
Permitting Field Support Group
Environmental Protection Department
Westinghouse Savannah River Co.
P.O. Box 616
Aiken, SC 29802

Re: In-Tank Precipitation (ITP) Facility Filtrate
Line Integrity Verification Requirements
SRS/F-Area
Aiken County

Dear Mr. Dunaway:

Per your May 31, 1994 letter, this office approves your request to perform hydrostatic testing of the two single-shelled filtrate transfer lines at the ITP facility once every two years with the testing period not to exceed 2.5 years. This approval is contingent on the following conditions:

(1) SCDHEC reserves the right to require more frequent testing of these lines as determined necessary.

(2) Should a leak occur in these lines, the line shall be replaced such that secondary containment requirements are met.

(3) Any requirements or agreements which require more frequent testing than required by this approval shall apply.

(4) All requirements of Construction Permit #17,424 shall be adhered to.

Should you have any questions, please call.

Sincerely,

Melinda G. Vickers

Melinda G. Vickers
Environmental Engineering Associate
Industrial and Agricultural Wastewater Division

cc: Lower Savannah EQC

recycled paper

OSR 3-4A-W (Rev1-89)

WESTINGHOUSE SAVANNAH RIVER COMPANY

INTER-OFFICE MEMORANDUM

April 15, 1994 GCO-LGL-940128

TO: J. V. ODUM, 705-3C
H. F. DAUGHERTY, 705-3C

FROM: A. R. GOUGH, 992-3W
OFFICE OF GENERAL COUNSEL

LEGAL BASIS FOR THE PERMITTING OF THE F/H TANK FARMS

The basis for the current permitting of the F/H Tank Farms is, believe it or not, relatively straightforward. It is the history that is convoluted.

As early as 1987, when the Part A (RCRA interim status) permit application for the Tank Farms was submitted to SCDHEC, there were numerous RCRA compliance issues identified with the permitting of the F/H Tank Farms. These compliance issues included lack of adequate secondary containment; inability to respond to leaks or make repairs to the tanks by removing the waste from the tanks and repairing the tanks within the time frames given; inability to leak test these tanks; and management and storage of a Land Disposal Restriction (LDR) waste.

According to 40 CFR 264.1(g)(6), 265.1(c)(10), and 270.1(c)(2)(v) of the RCRA regulations, wastewater treatment units, as defined in section 260.10, are exempt from the requirements for permitted and interim status treatment, storage, and disposal facilities. A wastewater treatment unit is "a device which:

(1) is part of a wastewater treatment facility that is subject to regulation under either section 402 or 307(b) of the Clean Water Act; and

(2) receives and treats or stores an influent wastewater that is a hazardous waste as defined in section 261.3 of this chapter, or that generates and accumulates a wastewater treatment sludge that is a hazardous waste as defined in section 261.3 of this chapter, or treats or stores a wastewater treatment sludge which is a hazardous waste as defined in section 261.3 of this chapter; and

(3) meets the definition of tank or tank system in section 260.10 of this chapter" (40 CFR 260.10)

If one goes through the definition and analyzes each element, it seems almost obvious that the Tank Farms would fall under such a definition. Probably the most confusing element is subsection (1) due to the peculiar way South Carolina decided to regulate facilities under their Clean Water Act authority. Section 402 of the Clean Water Act regulates the discharge of pollutants to waters of the U.S. under the National Pollution Discharge Elimination System (NPDES) permit program which has been delegated to the states including South Carolina. Pursuant to their Section 402 authority and the South Carolina Pollution Control Act (48-1-10 et. seq.), SCDHEC developed regulations that require wastewater permits even for those facilities that normally would not fall under the Clean Water Act as they do not discharge into the waters of the state. Under these regulations, the high level waste system facilities are considered "treatment works" [see R.61-9.122.2(b)(88)] from which no discharge occurs and thus, are required to have state wastewater construction permits [see R.61-9.122.21(a)(3)]. So in 1987, South Carolina permitted the F/H Effluent Treatment Facility (F/H ETF), a support facility for the tank farm which has an NPDES discharge, under a SC industrial wastewater permit. Saltstone in 1988 and DWPF in 1992 received SC industrial wastewater "no discharge" permits. The ability to permit the high level waste system in this manner can also be tied to the NPDES permit, issued by South Carolina pursuant to its authority under Section 402 of the Clean Water Act, for the F/H ETF discharge to waters of the state .

The high level waste in the F/H Tank Farms is a RCRA characteristic hazardous waste. It is a characteristic hazardous waste due to high pH and toxic metals and is also considered a "California list" waste, under the Land Disposal Restriction (LDR) regulations, primarily due to mercury concentrations. Under these regulations, the management of these wastes would be strictly controlled. Only the wastewater treatment unit is exempt, however; the exemption does not follow or attach to the waste. Consequently, all applicable hazardous waste management standards apply to the waste prior to treatment in the wastewater treatment unit, and to any residue generated by the treatment of that waste. The specified treatment technology to meet the LDR treatment standards for the disposal of the high level waste, however, is vitrification; so this should not be a concern.

Clearly, the F/H Tank Farms meets all three of the requirements for the wastewater exemption available under RCRA; it is part of a wastewater treatment facility regulated by Section 402 of the Clean Water Act, it stores hazardous waste, and it is a tank system. The remaining concerns with the F/H

Tank Farms, namely, secondary containment and leaks or potential for leaks, as per the agreement with the regulatory agencies, are handled under the Federal Facility Agreement (FFA).

Given the RCRA compliance issues, the availability of a wastewater exemption under RCRA and the nature of the SC wastewater regulations, the decision was made with full EPA and SCDHEC support to change the permitting of the high level waste system from RCRA to wastewater. Once the decision was made, implementation began. At about the same time as the decision was made to get wastewater permits, negotiations were beginning on the interagency agreement required under Section 120 of CERCLA. This agreement, which came to be known as the Federal Facilities Agreement (FFA), governs how DOE will comply with the requirements of CERCLA for the cleanup of waste sites at SRS. Section IX of the FFA was added to include the F/H Tank Farms and required SRS to submit an application for wastewater construction and operating permits for the F/H Tank Farms and, upon issuance of the wastewater construction and operating permits, amend the RCRA Part A permit by deleting the F/H Tank Farms. Section IX also contains the requirements for secondary containment or the equivalent and response to leaks. Recognizing that there may be delays due to the extended FFA negotiations, language was also placed in the LDR Federal Facility Compliance Agreement (LDR-FFCA) that was negotiated so that SRS would be able to achieve compliance with the LDRs for its mixed waste. This language allowed the F/H Tank Farms to maintain compliance until the FFA became effective and, thus, controlled.

The Tank Farms, except Tank 16 which was taken out of service and is now in the FFA program, received its industrial wastewater operating permit in January 1993. Per the terms of the FFA, SRS submitted a request to SCDHEC to withdraw the tank farms from the Part A permit in February 1993. The FFA went through a public comment period from December 1991 to February 1992 and finally became effective August 16, 1993. On March 1, 1994, SCDHEC sent a letter approving the withdrawal of the F/H Tank Farms from interim status. SCDHEC stated in this letter that "[t]he F and H Tank Farms meet the definition of wastewater treatment unit and are consequently exempt from the RCRA permit requirements according to R.61-79.270.1(c)(2)(v)."

If I can be of further assistance, please let me know.

ARG:ph

CC: W. M. Weirzbicki, 742-A
G. T. Wright, 703-H

OSR 3-4A-W (Rev 1-89)

WESTINGHOUSE SAVANNAH RIVER COMPANY

INTER-OFFICE MEMORANDUM

ESH-FSS-94-0179

March 17, 1994

TO: C. R. HAYES, 703-47A
M. HUNTER, 703-6C
D. BIGNELL, 719-4A
B. M. LAWRENCE, 742-A
G. J. BARNES, 992-3W
A. GOUGH, 992-3W
G. DAVIS, 241-100F
C. STEVENS, 742-6G

FROM: MARY E. JOHNSON, 742-A
(5-3849)

MEJ

RESOURCE CONSERVATION AND RECOVERY ACT (RCRA) PART A APPLICATION, REVISION 11 (U)

Please find attached a recent letter from the South Carolina Department of Health and Environmental Control (SCDHEC) approving several changes in revision 11 of the Savannah River Site RCRA Part A permit application. This revision included the request to withdraw the F and H Tank Farms from interim status. This request has been approved. Consequently, the F and H Tank Farms are now exempt from RCRA requirements.

Please contact me with any questions. (x5-3849)

MEJ:sam
Attachment

CC: R. Peterson, 703-47A
J. E. Bolen, 703-47A
R. H. Rustad, 703-47A
S. J. Carroll, 742-A
W. D. Dunaway, 742-5A
W. M. Wierzbicki, 742-A
EPD File, 742-A

South Carolina
DHEC
Department of Health and Environmental Control
2600 Bull Street, Columbia, SC 29201

Commissioner: Douglas E. Bryant

Board: Richard E. Jabbour, DDS, Chairman
Robert J. Stripling, Jr., Vice Chairman
Sandra J. Molander, Secretary
William E. Applegate, III,
John H. Burriss
Tony Graham, Jr., MD
John B. Pate, MD

Promoting Health, Protecting the Environment

March 1, 1994

RECEIVED
MAR 7 1994
ENVIRONMENTAL PROTECTION DEPT.
WESTINGHOUSE SAVANNAH RIVER CO.

Ms. S.J. Carroll, Acting Manager
Facility Support Section
Environmental Protection Department
Westinghouse Savannah River Company
Post Office Box 616
Aiken, SC 29802

Re: Resource Conservation and Recovery Act (RCRA)
Part A Application, Revision 11
Savannah River Site

Dear Ms. Carroll:

The Department has received revision number 11, dated July of 1993, to the RCRA Part A application for the Savannah River Site. All of the changes in revision 11 are approved except for one, the addition of treatment at the Mixed Waste Storage Shed (MWSS). Additional information is needed in order for the Department to consider this change.

The MWSS currently has interim status for storage of hazardous waste in containers. Treatment at the MWSS may be added to the Part A as part of an application for consideration in the permitting process; however, treatment capacity may not be added under interim status unless the Department approves the addition under R.61-79.270.72(a)(2). SRS should clarify whether the additional treatment capacity at the MWSS is being requested for future consideration in the permitting process or as a change under interim status. At present, the requirements for a change under interim status have not been met; therefore, approval for addition of treatment at the MWSS has not been given by the Department. SRS may not conduct treatment at the MWSS without first receiving a modification to the RCRA permit or approval from the Department for a change under interim status. The only exception to the preceeding statement is if the neutralization in containers proposed at the MWSS meets the exemption from permit requirements under R.61-79.270.1(c)(2)(v) as treatment in elementary neutralization units. The definition for an elementary neutralization unit is found in R.61-79.260.10. If SRS believes that treatment in containers at the MWSS would meet this exemption, then SRS may conduct this activity without a permit modification or a change under interim status provided that concurrence from the Department is obtained.

recycled paper

One of the approved changes in revision 11 of the Part A is the deletion of the F and H Tank Farms. By deletion of these units, SRS is requesting withdrawal of these units from interim status. The F and H Tank Farms received an industrial wastewater operating permit on March 3, 1993. The F and H Tank Farms meet the definition of wastewater treatment unit and are consequently exempt from the RCRA permit requirements according to R.61-79.270.1(c)(2)(v). Therefore, the Department approves withdrawal of the F and H Tank Farms from interim status.

All of the revised pages in revision 11 have been inserted in the SRS Part A application except for the pages associated with treatment at the MWSS. These pages will be held until clarification is received from SRS.

If you have any questions, please call Shelly Sherritt at (803) 734-5203.

Sincerely,

John T. Litton

John T. Litton, P.E., Manager
Hazardous Waste Permitting
Bureau of Solid & Hazardous Waste Management

JTL/SS/rrb

cc: Larry Arrington, Industrial Wastewater
John E. Johnston, U.S. EPA, Region IV
Myra Reece, Lower Savannah EQC

South Carolina
DHEC
Department of Health and Environmental Control
2600 Bull Street, Columbia, SC 29201

Commissioner: Douglas E. Bryant

Board: Richard E. Jabbour, DDS, Chairman
Robert J. Stripling, Jr., Vice Chairman
Sandra J. Molander, Secretary

William E. Applegate, III,
John H. Burriss
Tony Graham, Jr., MD
John B. Pate, MD

Promoting Health, Protecting the Environment

October 26, 1993

Mr. W.D. Dunaway, Manager
Permitting Field Support Group
Environmental Protection Department
Westinghouse Savannah River Co.
P.O. Box 616
Aiken, SC 29802

Re: DWPF & ITP Chemical Runs
SRS S-Area
Aiken County

Dear Mr. Dunaway:

Per your April 12, 1993 letter, this office concures that minor alterations within the DWPF and ITP do not require SCDHEC approval provided the alterations do not change the composition of the wastestream(s) or the approved method(s) of disposal. The following are alterations which do not require approval:

1. Redirecting flows within ITP.

2. Testing alternative chemicals within ITP/DWPF provided the chemicals do not become a part of a wastestream which is discharged to the environment

3. Making minor equipment modifications within ITP/DWPF.

If you should have any questions please call.

Sincerely,

Larry E. Arrington
Industrial & Agricultural
Wastewater Division

cc: Lower Savannah EQC

recycled paper

W-0517 LATE WASH

South Carolina
DHEC
Department of Health and Environmental Control
2600 Bull Street, Columbia, SC 29201

Interim Commissioner: Thomas E. Brown, Jr.

Board: John H. Burriss, Chairman
Richard E. Jabbour, DDS, Vice Chairman
Robert J. Stripling, Jr. Secretary

William E. Applegate, III,
Toney Graham, Jr., MD
Sandra J. Molander
John B. Pate, MD

Promoting Health, Protecting the Environment

April 30, 1993

Mr. W.D. Dunaway, Manager
Permitting Field Support Group
Environmental Protection Department
Westinghouse Savannah River Co.
P.O. Box 616
Aiken, SC 29802

Re: Construction Permit 17424-IW Modification
SRS F/H-Area
Aiken County

Dear Mr. Dunaway:

This office has completed its review of your March 12, 1992 Engineering Report supporting a modification to construction permit 17424-IW. The modification is for the addition of approximately 1100 feet of new three (3) inch core piping and associated containment jacketing to the existing H-S Interarea Transfer Line for the purpose of bypassing the existing Auxiliary Pump Pit (APP) in order to accommodate the future implementation of the "Latewash" Facility. Based on our review, we approve this addition.

If you should have any questions please call.

Sincerely,

Larry E. Arrington
Industrial & Agricultural
Wastewater Division

cc: Lower Savannah EQC

recycled paper

South Carolina
DHEC
Department of Health and Environmental Control
2600 Bull Street, Columbia, SC 29201

Interim Commissioner: Thomas E. Brown, Jr.

Board: John H. Burriss, Chairman
Richard E. Jabbour, DDS, Vice Chairman
Robert J. Stripling, Jr. Secretary

William E. Applegate, III,
Toney Graham, Jr., MD
Sandra J. Molander
John B. Pate, MD

Promoting Health, Protecting the Environment

PARTIAL PERMIT TO OPERATE

2 of 2

March 3, 1993

Westinghouse Savannah River Company
P. O. Box 616
Aiken, South Carolina 29802

Re: Project: F and H Area High Level Radioactive Waste Tank Farms
Construction Permit No.: 17,424-IW
County: Aiken and Barnwell

Dear Sirs:

Based on a final construction inspection conducted by Jeff Chapman on 2-26-93, this office does hereby authorize the F/H Area High-Level Radioactive Tank Farm to be placed into operation (the description of the F/H Area High-Level Radioactive Tank Farm is located on page 2 of this Permit to Operate).

Special Conditions: The special conditions applicable to the F/H Area High-Level Radioactive Tank Farm are located on pages 3 and 4 of this Permit to Operate.

If there are any questions concerning this project, please contact this office at 641-7670.

Yours truly,

Jeff W. Chapman

Jeff W. Chapman
District Engineer
Lower Savannah District
Environmental Quality Control

JWC:chp

cc: Danny Dunaway, Westinghouse
A. B. Gould, DOE
Industrial Wastewater Division, SCDHEC

Environmental Quality Control Office, Lower Savannah District
George P. Nelson Building
218 Beaufort Street NE, Aiken, SC 29801 (Phone 641-7670 Fax 641-7675)

printed on recycled paper

Project Description

The construction of two wastewater storage and treatment facilities and associated transfer systems, one in F-Area the other in H-Area, designed to treat wastewater generated at the F-Area Separations Facility, H-Area Separations Facility, Equipment Decontamination/Repair Facility, F/H Effluent Treatment Facility, Defense Waste Processing Facility, Receiving Basin for Offsite Fuels and Resin Regeneration Facility, and SRL Laboratory. The treatment facilities will also receive reactor filter backwash, incidental wastes, and process chemicals.

The F-Area facility consists of the following equipment:

1. 22 tanks, eight (8) of which are 750,000 gal Type I tanks (numbers 1-8), ten (10) 1,300,000 gal Type III/IIIA tanks (numbers 25-28, 33-34, and 44-47), and four (4) 1,300,000 gal Type IV tanks (numbers 17-20).
2. Two evaporator systems (242-F and 242-16F) each of which consists of an evaporator, condenser, mercury collection tank, cesium removal pump tank and column, overheads hold tanks, and overheads diverting tank (242-F only). The 242-F evaporator system also contains a waste concentrate transfer system.
3. Six (6) diversion boxes (FDB1, FDB2, FDB3, FDB4, FDB5, FDB6)
4. Three (3) pump pits (FPP1, FPP2, FPP3)
5. Associated tanks, pumps, and piping.

The H-Area facility consists of the following equipment:

1. 27 tanks, four (4) of which are 750,000 gal Type I tanks (numbers 9-12), three (3) are 1,030,000 gal Type II tanks (numbers 13-15), sixteen (16) 1,300,000 gal Type III/IIIA tanks (numbers 29-32, 35-43, 48, 49, and 51), and four (4) 1,300,000 gal Type IV tanks (numbers 21-24).
2. Two evaporator systems (242-H and 242-16H) each of which consists of an evaporator, condenser, mercury collection tank, cesium removal pump tank and column, and overheads hold tanks. The 242-H evaporator system also contains a waste concentrate transfer system.
3. Eight (8) diversion boxes (HDB1, HDB2, HDB3, HDB4, HDB5, HDB6, HDB7, HDB8)
4. Ten (10) pump pits (HPP1, HPP2, HPP3, HPP4, HPP5, HPP6, HPP7, HPP8, HPP9, HPP10)
5. In-Tank Precipitation Process consisting of:
   a. Two (2) Cross flow filters
   b. One (1) precipitate stripper column
   c. One (1) wash stripper column
   d. Two (2) hold tanks
6. Associated tanks, pumps, and piping.

This permit also includes the transfer line between the F-Area and H-Area facilities.

SPECIAL CONDITIONS

1. The permittee shall maintain at each permitted facility a complete Operations and Maintenance Manual for the waste treatment system. The manual shall be made available for on-site review during normal working hours. The manual shall contain operation and maintenance instructions for all equipment and appurtenances associated with the waste treatment system. The manual shall contain a general description of the treatment process(es), operating characteristics that will produce maximum treatment efficiency and corrective action to be taken should operating difficulties be encountered.

2. The permittee shall provide for the performance of routine daily treatment plant inspections by a certified operator of the appropriate grade. The inspections shall include, but are not limited to, areas which require a visual observation to determine efficient operations and for which immediate corrective measures can be taken using the O & M manual as a guide. All inspections shall be recorded and shall include the date, time and name of person making the inspection, corrective measures taken, and routine equipment maintenance, repair, or replacement performed. The permittee shall maintain all records of inspections at the permitted facility and the records shall be made available for on-site review during normal working hours.

3. The permittee shall develop and implement a Best Management Practices (BMP) plan to identify and control the discharge of significant amounts of oils and the hazardous and toxic substances listed in 40 CFR Part 117 and Tables II and III of Appendix D to 40 CFR Part 122. The plan shall include a listing of all potential sources of spills or leaks of these materials, a method for containment, a description of training, inspection and security procedures, and emergency response measures to be taken in the event of a discharge to surface waters or plans and/or procedures which constitute an equivalent BMP. Sources of such discharges may include materials storage areas; in-plant transfer, process and material handling areas; loading and unloading operations; plant site runoff; and sludge and waste disposal areas. The BMP plan shall be developed, and updated as necessary, in accordance with good engineering practices, shall be documented in narrative form, and shall include any necessary plot plans, drawings, or maps. The BMP plan shall be developed no later than six months after issuance of the final permit (or modification), shall be implemented no later than one year after issuance of the final permit (or modification). A Spill Prevention Control and Countermeasure (SPCC) plan may be used in lieu of a BMP plan if BMP requirements are satisfied. The BMP plan or its equivalent shall be maintained at the plant site and shall be available for inspection by EPA and Department personnel.

4. No chemicals (process or otherwise) shall be added to the waste tanks which will alter the composition of the F/H ETF effluent from that which was evaluated for the NPDES permit.

5. The addition (not replacement) of new piping and chemical feed systems, even though related to the F/H Tank Farm process, shall not be considered normal operation if the piping and/or feed systems are to be located outside the tank farm boundary.

6. Once waste removal begins on a tank with a leak or crack and the waste is removed to a level below the lowest known leak or crack, that level shall become the maximum operating level of the tank and shall not be exceeded unless the exceedance is a temporary result of the waste removal process.

7. No tank that leaks or has leaked shall be used for waste receipt without prior approval from this Department. This condition does not apply to the necessary addition of waste for waste removal purposes. Also, this condition does not apply to the use of tank 13, the 242-H evaporator feed tank, provided the construction and utilization of the replacement evaporator, 242-25H, and it's associated feed tank do not deviate significantly from the State approved schedule. Any schedule changes must be approved by this office.

8. Within 60 days from the effective date of this permit the Permittee shall submit to this office a report containing the QA/QC procedures followed during the installation of the liner extension within the ITP hold tank area.

9. The Permittee shall maintain contingency plans or emergency procedures in place to respond to any known emergency situation with the potential to negatively impact human health or the environment. The plans and/or procedures shall be updated as necessary to include new information or changing conditions.

10. On June 30, 1987 the permittee submitted a revised RCRA Part A permit application which included the high-level radioactive waste tank system(s) contained in this permit. After this office issues the wastewater construction and operating permits for this facility, the permittee should amend its RCRA Part A permit to delete the tank system(s).

11. Based on a review of the Tank Assessment Report, submitted as a requirement of the Federal Facilities Agreement (FFA), Section IX, this office has determined that the Type I tanks identified as tanks 2-8 are approvable as equivalent devices for secondary containment. The Type I tanks, however, should only be used for waste receipt when there is no suitably available volume in an approved Type III tank. Furthermore, if any Type I tank develops a leak which exceeds the capacity of the 5-foot deep secondary containment pan, this approval shall be rescinded and no additional waste shall be directed to these Type I tanks.

12. This permit is being issued after review and approval of a construction permit application submitted to the State of South Carolina pursuant to the requirements of a Federal Facilities Agreement (FFA) entered into by the United States Department of Energy (the permittee), the United States Environmental Protection Agency, and The State of South Carolina on January 15, 1993. In addition to the conditions specifically stated in this permit, the permittee shall be subject to all applicable requirements of Section IX, including referenced appendices, of the FFA.

South Carolina
DHEC
Department of Health and Environmental Control
2600 Bull Street, Columbia, SC 29201

Interim Commissioner: Thomas E. Brown, Jr.

Board: John H. Burriss, Chairman
Richard E. Jabbour, DDS, Vice Chairman
Robert J. Stripling, Jr. Secretary

William E. Applegate, III,
Toney Graham, Jr., MD
Sandra J. Molander
John B. Pate, MD

Promoting Health, Protecting the Environment

January 25, 1993

Mr. W.D. Dunaway, Manager
Permitting Field Support Group
Environmental Protection Department
Westinghouse Savannah River Co.
P.O. Box 616
Aiken, SC

Re: Construction Permit #17,424-IW
SRS F/H-Area
Aiken and Barnwell County

Dear Sir:

Enclosed is a State Construction Permit for the above-referenced wastewater treatment facility. The conditions of the permit are explicitly stated: construction is to be performed in accordance with this permit and the supporting engineering report, plans and specifications approved by this Office.

Your EQC District contact from this Department is Myra Reece (address below). She should be notified when construction has begun and when the facility is ready for operation. A permit to operate must be issued before the permitted facility is placed in operation. At the time you request an operating permit you must submit a letter to our District Office from the Registered Engineer who signed Item X on the Application for Permit to Construct. The Engineer should certify that the construction has been completed in accordance with the approved plans and specifications. At the discretion of the Department, a final inspection may be required prior to operating permit issuance.

In accordance with State Law, your facility will be required to have an operator-in-charge who has been certified by the SC Environmental Certification Board. Your facility has been classified in Group IV-P/C, necessitating an operator holding a Grade A-P/C or higher certificate. You will not be given permission to operate your facility until a properly qualified operator(s) has been obtained. Questions in this matter should be directed to William R. Moore, SC Environmental Certification Board, 2221 Devine Street, Suite 320, Columbia, SC 29205.

Sincerely,

Marion F. Sadler, Jr., Acting Director
Industrial & Agricultural
Wastewater Division

Address of District Contact:
218 Beaufort Street, NE
Aiken, S.C. 29801

MFS/LEA

cc: Myra Reece, Lower Savannah EQC

recycled paper

Project Description

The construction of two wastewater storage and treatment facilities and associated transfer systems, one in F-Area the other in H-Area, designed to treat wastewater generated at the F-Area Separations Facility, H-Area Separations Facility, Equipment Decontamination/Repair Facility, F/H Effluent Treatment Facility, Defense Waste Processing Facility, Receiving Basin for Offsite Fuels and Resin Regeneration Facility, and SRL Laboratory. The treatment facilities will also receive reactor filter backwash, incidental wastes, and process chemicals.

The F-Area facility consists of the following equipment:

1. 22 tanks, eight (8) of which are 750,000 gal Type I tanks (numbers 1-8), ten (10) 1,300,000 gal Type III/IIIA tanks (numbers 25-28, 33-34, and 44-47), and four (4) 1,300,000 gal Type IV tanks (numbers 17-20).
2. Two evaporator systems (242-F and 242-16F) each of which consists of an evaporator, condenser, mercury collection tank, cesium removal pump tank and column, overheads hold tanks, and overheads diverting tank (242-F only). The 242-F evaporator system also contains a waste concentrate transfer system.
3. Six (6) diversion boxes (FDB1, FDB2, FDB3, FDB4, FDB5, FDB6)
4. Three (3) pump pits (FPP1, FPP2, FPP3)
5. Associated tanks, pumps, and piping.

The H-Area facility consists of the following equipment:

1. 27 tanks, four (4) of which are 750,000 gal Type I tanks (numbers 9-12), three (3) are 1,030,000 gal Type II tanks (numbers 13-15), sixteen (16) 1,300,000 gal Type III/IIIA tanks (numbers 29-32, 35-43, 48, 49, and 51), and four (4) 1,300,000 gal Type IV tanks (numbers 21-24).
2. Three (3) evaporator systems (242-H, 242-16H, and 242-25H) each of which consists of an evaporator, condenser, mercury collection tank, cesium removal pump tank and column, and overheads hold tanks. The 242-H evaporator system also contains a waste concentrate transfer system.
3. Eight (8) diversion boxes (HDB1, HDB2, HDB3, HDB4, HDB5, HDB6, HDB7, HDB8)
4. Ten (10) pump pits (HPP1, HPP2, HPP3, HPP4, HPP5, HPP6, HPP7, HPP8, HPP9, HPP10)
5. In-Tank Precipitation Process consisting of:
   a. Two (2) Cross flow filters
   b. One (1) precipitate stripper column
   c. One (1) wash stripper column
   d. Two (2) hold tanks
6. Associated tanks, pumps, and piping.

This permit also includes the transfer line between the F-Area and H-Area facilities, the line between the H-Area facility and the DWPF, and the pump pits (APP and LPPP) associated with the line from H-Area to the DWPF including all associated pumps and tanks.

SPECIAL CONDITIONS

1. The permittee shall maintain at each permitted facility a complete Operations and Maintenance Manual for the waste treatment system. The manual shall be made available for on-site review during normal working hours. The manual shall contain operation and maintenance instructions for all equipment and appurtenances associated with the waste treatment system. The manual shall contain a general description of the treatment process(es), operating characteristics that will produce maximum treatment efficiency and corrective action to be taken should operating difficulties be encountered.

2. The permittee shall provide for the performance of routine daily treatment plant inspections by a certified operator of the appropriate grade. The inspections shall include, but are not limited to, areas which require a visual observation to determine efficient operations and for which immediate corrective measures can be taken using the O & M manual as a guide. All inspections shall be recorded and shall include the date, time and name of person making the inspection, corrective measures taken, and routine equipment maintenance, repair, or replacement performed. The permittee shall maintain all records of inspections at the permitted facility and the records shall be made available for on-site review during normal working hours.

3. The permittee shall develop and implement a Best Management Practices (BMP) plan to identify and control the discharge of significant amounts of oils and the hazardous and toxic substances listed in 40 CFR Part 117 and Tables II and III of Appendix D to 40 CFR Part 122. The plan shall include a listing of all potential sources of spills or leaks of these materials, a method for containment, a description of training, inspection and security procedures, and emergency response measures to be taken in the event of a discharge to surface waters or plans and/or procedures which constitute an equivalent BMP. Sources of such discharges may include materials storage areas; in-plant transfer, process and material handling areas; loading and unloading operations; plant site runoff; and sludge and waste disposal areas. The BMP plan shall be developed, and updated as necessary, in accordance with good engineering practices, shall be documented in narrative form, and shall include any necessary plot plans, drawings, or maps. The BMP plan shall be developed no later than six months after issuance of the final permit (or modification), shall be implemented no later than one year after issuance of the final permit (or modification). A Spill Prevention Control and Countermeasure (SPCC) plan may be used in lieu of a BMP plan if BMP requirements are satisfied. The BMP plan or its equivalent shall be maintained at the plant site and shall be available for inspection by EPA and Department personnel.

4. No chemicals (process or otherwise) shall be added to the waste tanks which will alter the composition of the F/H ETF effluent from that which was evaluated for the NPDES permit.

5. The addition (not replacement) of new piping and chemical feed systems, even though related to the F/H Tank Farm process, shall not be considered normal operation if the piping and/or feed systems are to be located outside the tank farm boundary.

6. Once waste removal begins on a tank with a leak or crack and the waste is removed to a level below the lowest known leak or crack, that level shall become the maximum operating level of the tank and shall not be exceeded unless the exceedance is a temporary result of the waste removal process.

7. No tank that leaks or has leaked shall be used for waste receipt without prior approval from this Department. This condition does not apply to the necessary addition of waste for waste removal purposes. Also, this condition does not apply to the use of tank 13, the 242-H evaporator feed tank, provided the construction and utilization of the replacement evaporator, 242-25H, and it's associated feed tank do not deviate significantly from the State approved schedule. Any schedule changes must be approved by this office.

8. Within 60 days from the effective date of this permit the Permittee shall submit to this office a report containing the QA/QC procedures followed during the installation of the liner extension within the ITP hold tank area.

9. The Permittee shall maintain contingency plans or emergency procedures in place to respond to any known emergency situation with the potential to negatively impact human health or the environment. The plans and/or procedures shall be updated as necessary to include new information or changing conditions.

10. On June 30, 1987 the permittee submitted a revised RCRA Part A permit application which included the high-level radioactive waste tank system(s) contained in this permit. After this office issues the wastewater construction and operating permits for this facility, the permittee should amend its RCRA Part A permit to delete the tank system(s).

11. Based on a review of the Tank Assessment Report, submitted as a requirement of the Federal Facilities Agreement (FFA), Section IX, this office has determined that the Type I tanks identified as tanks 2-8 are approvable as equivalent devices for secondary containment. The Type I tanks, however, should only be used for waste receipt when there is no suitably available volume in an approved Type III tank. Furthermore, if any Type I tank develops a leak which exceeds the capacity of the 5-foot deep secondary containment pan, this approval shall be rescinded and no additional waste shall be directed to these Type I tanks.

12. This permit is being issued after review and approval of a construction permit application submitted to the State of South Carolina pursuant to the requirements of a Federal Facilities Agreement (FFA) entered into by the United States Department of Energy (the permittee), the United States Environmental Protection Agency, and The State of South Carolina on January 15, 1993. In addition to the conditions specifically stated in this permit, the permittee shall be subject to all applicable requirements of Section IX, including referenced appendices, of the FFA.

South Carolina
DHEC
Department of Health and Environmental Control
2600 Bull Street
Columbia, SC 29201

Bureau of Water Pollution Control
Permit To Construct

F/H-Area

Permission is hereby granted to: Westinghouse Savannah River Co.
P.O. Box 616
Aiken, S.C.

for the construction of a wastewater treatment system in accordance with the construction plans, specifications, engineering report and Construction Permit Application signed by Richard L. Stegen, Ihor John Nyszczot, Richard Kowalski and John William Nelson, Registered Professional Engineers, S. C. Registration Numbers: 12633, 10901, 14077, and 4448 respectively.

Project Name: F and H-Area High-Level Radioactive Waste Tank Farms **County:** Aiken & Barnwell

Project Description: The description of the F/H Area High-Level Radioactive Tank Farm is located on page 2 of this permit.

The wastewater generated at this facility will be sent to the F/H ETF, precipitate slurry and sludge will be sent to the DWPF, and decontaminated salt solution will be sent to the Z-Area Saltstone Manufacturing and Disposal Facility.

There is no direct discharge from this facility.

The effluent concentrations of those constituents the wastewater treatment system is designed to remove or reduce are as required by the receiving facilities.

Treatment System Classification: Group IV-PC.

Special Conditions: The special conditions applicable to the F/H Area High-Level Radioactive Tank Farm are located on page 3 and 4 of this permit.

Permit Number: 17,424-IW **Date of Issue:** January 25, 1993

Expiration Dates: Unless construction begins prior to January 25, 1994 and construction is completed prior to January 1, 1998 this permit will expire.

In accepting this permit, the owner agrees to the admission of properly authorized persons at all reasonable hours for the purpose of sampling and inspection.

THIS IS A PERMIT FOR CONSTRUCTION ONLY AND DOES NOT CONSTITUTE STATE DEPARTMENT OF HEALTH AND ENVIRONMENTAL CONTROL APPROVAL, TEMPORARY OR OTHERWISE, TO PLACE THIS SYSTEM IN OPERATION.

Marion B. Cadle

Bureau of Water Pollution Control

South Carolina Department of Health and Environmental Control

cc: Paul d
Kathy wol-
mt

2600 Bull Street
Columbia, S.C. 29201

Commissioner
Michael D. Jarrett

Board
Toney Graham, Jr., M.D., Chairman
Henry S. Jordan, M.D., Vice-Chairman
John B. Pate, M.D., Secretary
William E. Applegate
Oren L. Brady, Jr.
John Hay Burriss
Euta M. Colvin, M.D.

June 30, 1989

Mr. S. R. Wright, Director
Environmental Division
U.S. DOE/Savannah River Site
P. O. Box A
Aiken, South Carolina 29802

RE: F/H-Area High Level Waste Tanks
Defense Waste Processing Facility (DWPF)
Savannah River Site - SC1 890 008 989

Dear Mr. Wright:

Based on previous discussions and correspondence between DOE, EPA, and SCDHEC, the Department has determined that the above referenced units should be permitted pursuant to the South Carolina Pollution Control Act. Application for these permits should be directed to the Bureau of Water Pollution Control.

Based on this determination and the fact that the referenced units will be addressed as wastewater treatment units, DOE should formally withdraw the units from the interim status Part A for the Savannah River Site.

Please contact this office if you have any questions.

Sincerely,

Hartsill W. Truesdale

Hartsill W. Truesdale, P.E., Chief
Bureau of Solid and Hazardous Waste Management

HWT:DEWjr:jth

cc: James H. Scarbrough, EPA Region IV
Jim Joy
Bill Culler
Kim Cauthen

Gene Laska

12/17/01 02:19 PM

To: Monte Hawkins/WSRC/Srs
cc: Larry Haney/WSRC/Srs@Srs, Marshall Looper/WSRC/Srs@Srs, Sharon Nicodemus/WSRC/Srs@Srs, Welford03 Goldston/WSRC/Srs@Srs
cc: Marshall Looper/WSRC/Srs@Srs, Welford03 Goldston/WSRC/Srs@Srs, Gene Laska/WSRC/Srs@Srs, Larry Haney/WSRC/Srs@Srs, Sharon Nicodemus/WSRC/Srs@Srs
Subject: Re: Permit modifications and PBIs

In response to the questions Monte posed in the atached, the following might help to clarify which issues might fall under the PBI:

Question 1 - Is there a permit modification required to undo the Tank 50 Permit change that was recently made?
Response - On August 17, 2001, SCDHEC provided a response to our letter requesting a re-designation of Tank 50. In the response, SCDHEC indicated that the following Permits would be affected: 14,338, 14,520 and 17,424-IW. These permits would have to be modified again since SRS has approval to place Tank 50 into the tank farm fold and re-do the piping and valving to eliminate the transfer path from Tank 50 to the Saltstone. This change will supercede permit 14, 338 and make the Tank 50 permit (14,520) disappear. I am anticipating that we will have to provide another letteer requesting that these permits be revised for the next re-configuration of the tank farm.

Quesiton 2 - Will the tank farm permit need to be modified to allow processing of the low Ci salt and sending it to Z-Area?
Response - Tank Farm Permit 17,424-IW still includes the ITP process and would require modification to by-pass that process if low Ci will be sent directly to Saltstone. SCDHEC is aware that we will not be using the ITP process, however, we will still need to modify the construction/operating permit to make the necessary flow changes to the process.

In addition, we have not provided SCDHEC with the option of processing and sending low Ci salt directly to Saltstone w/o treatment in any of our original /follow-up IWT applications. This change may require dialogue with SCDHEC and is expected to require a permit modification. Any addition of new piping and chemical feed systems located outside the tank farm boundary will also require a modification to the tank farm permit, as noted in the special conditions.

Please let me know if you have more specific questions regarding the proposed changes to the process.

Gene
5-8838

Monte Hawkins

Monte Hawkins

12/17/01 01:15 PM

To: Marshall Looper/WSRC/Srs@Srs, Welford03 Goldston/WSRC/Srs@Srs, Gene Laska/WSRC/Srs@Srs, Larry Haney/WSRC/Srs@Srs
cc: Sharon Nicodemus/WSRC/Srs@Srs
Subject: Permit modifications and PBIs

As I understand it there is a PBI based on submittal of any needed permit (tank farm, saltstone

production, and disposal) modifications by sometime in March or April. Both Sonny and Marshall have made inquiries about the subject.

As a starting point here are my thoughts on the subject. Larry Haney and Gene Laska are the permit guys for these facilities along with Sharon Nicodemus. Fire back at will.

I believe the posture we are taking is that no permit "modifications" will be needed for saltstone restart or low Ci salt. Having said that, there are some DHEC notifications that will be needed for both Z-Area facilities for low Ci salt.

1. Industrial Waste Permit # 217 for the operation of the Z-Area vaults requires:

- "This office should be notified if the radioactive composition of the saltstone varies significantly from that identified in the permit application."

  It seems to me that making saltstone from low Ci salt would trigger that notification. Clearly, this is a subjective judgement. We should talk about it if others disagree.

  The same notification requirement was included in the modification of the permit in 1996 at which time the permit number was changed to #025500-1603.

  Note that this notification is tied to the radioactive composition of the saltstone, not to the feed to the saltstone production facility.

2. The wastewater treatment facility Construction Permit # 12,683 for the saltstone production facility contains the following special condition:

- "If the salt solution influent concentrations to the wastewater solidification facility changes appreciably from those outlined in the approved final engineering report, SCDHEC must be informed immediately with a follow up report within 30 days addressing the change in salt solution characteristics and its effect on the saltstone disposal area"

  Again, a very subjective condition requiring a judgement decision on our part. However, I'd definitely say that this condition applies to low Ci salt processing.

3. Two questions for Gene Laska. Is there a "permit modification" required to undo the Tank 50 permit change that was recently made? If so, that might fall under the PBI.

Second question, will the tank farm permit need to be modified to allow processing of the low Ci salt and sending it to Z- Area? That permit is fairly general, however, there may be some words in it regarding salt processing and ITP that are now outdated.

W-0517

D H E C

PROMOTE PROTECT PROSPER

2600 Bull Street
Columbia, SC 29201-1708

October 11, 2001

Mr. Don Gordon, Manager
Westinghouse Savannah River Company
Environmental Protection Department
Bldg. 742-A
Aiken, SC 29808

RE: Equipment disposition during high level waste tank system waste removal and tank closure activities
Ref: Letter from D. Gordon (Westinghouse) to A. Wright (SCDHEC) dated October 5, 2001
Savannah River Site
Aiken County

Dear Mr. Gordon:

The Department has received your October 5 letter and concurs with the general agreement between the Department and SRS regarding the proposed disposition of equipment during the closure process of the high level waste tank system. As stated in your letter, the closure plan shall be modified to reflect the equipment disposition alternative and all closure modules for the tanks will include the scope and impacts of the disposition alternative. If you have any further questions, please contact me at (803) 898-4238.

Sincerely,

Adrienne F. Wright

Adrienne F. Wright
Environmental Engineer Associate
Federal, Energy, Pre-Treatment Permitting Section
Bureau of Water
wrightaf@columb32.dhec.state.sc.us

AFW/afw

Cc: Keith Collinsworth, EQC Administration
Chuck Gorman, Manager, FFA Section, BLWM
Melissa King, Manager, FEP Section
Myra Reece, Director, Lower Savannah EQC District
Shelly Sherritt, Manager, Operations Engineering, BLWM

F:\USERS\WRIGHTAF\Documents\SRS\HLW Tanks\Equipment disposition during tank closure process.doc

W-0517

SRS
savannah river site
TM

WESTINGHOUSE SAVANNAH RIVER COMPANY
INTEROFFICE MEMORANDUM

October 22, 2001

ESH-EPC-2001-00001

TO: C. R. HAYES, 703-H

FROM: G. H. LASKA, 742-A
(5-8838)

EQUIPMENT DISPOSITION DURING HIGH LEVEL WASTE SYSTEM WASTE REMOVAL AND TANK CLOSURE ACTIVITIES

Per the attached letter from SCDHEC, concurrence has been received for the disposition of equipment during the closure process of the high level waste tank system. Please note that the closure plan must be modified to reflect the equipment disposition alternative and the closure modules include the scope and impact of the disposition alternative.

If you have any questions or need additional information, please contact me at 5-8838.

ghl/aeo
Att.
c: C. V. Anderson, 703-A
A. B. Gould, 703-A
J. D. Arnett, 703-A
R. O. Baker, 703-A

3

bc: M. B. Hughes, 742-A
P. M. Allen, 742-A
R. M. Campbell, 703-H
S. F. Piccolo, 703-H
H. Conner, 703-H
N. R. Davis, 703-H
J. N. Dewes, 703-H
V. G. Dickert, 703-H
K. A. Hauer, 704-71S
M. Hawkins, 742-A
N. J. Lowery, 742-A
L. C. Martin, 742-A
J. V. Odum, 742-A
M. D. Johnson, 703-H
W. I. Lewis, 703-H
T. J. Lex, 703-H
E. Saldivar, Jr., 742-4G
S. L. Tibrea, 742-3G
D. A. Broaden, 703-H
A. R. Gough, 719-4A
EPD File, 742-A
Records Processing, 773-52A

FILE INFO:
HLW, Tanks, Closure, Permit
10040
DOE 1-8.a(1)
Permanent

W-0517

Westinghouse
Savannah River Company
Aiken, SC 29808

October 8, 2001

ESH-ESS-2001-00295

Ms. Adrienne F. Wright, Engineer
Industrial, Agricultural and Stormwater
Permitting Division
South Carolina Department of Health and
Environmental Control
2600 Bull Street
Columbia, South Carolina 29201

Dear Ms. Wright:

DECONTAMINATION OF HIGH LEVEL WASTE SYSTEM EQUIPMENT

Ref.: (1) Construction/Operating Permit #17,980-IW (299-H Maintenance and Decontamination Facility Wastewater Collection System)
(2) Construction/Operating Permit #17,424-IW (F/H Area High Level Radioactive Waste Tank Farms)

The purpose of this letter is two-fold. First, the Savannah River Site (SRS) wishes to confirm that SCDHEC concurs with the SRS interpretation that the scope of Construction/Operating Permit # 17,980-IW (Reference 1) includes normal decontamination, repair, and preparation for disposal activities performed in the 299-H Facility. Secondly, SRS is hereby requesting that 299-H Maintenance and Decontamination Facility operations and permitted facility components included in Construction/Operating Permit #17,980 be incorporated into Construction/Operating Permit # 17,424-IW for the F/H Area Tank Farm (Reference 2).

The engineering report included in the permit application for the 299-H wastewater collection system (Reference 1) describes that Building 299-H receives failed equipment from the F and H tank farms and other radioactive facilities. As indicated in the report, equipment is decontaminated, repaired and returned to service. If a component cannot be repaired or otherwise reused, it is then prepared for disposal. The primary 299-H decontamination process is the immersion of the equipment in a stainless steel tank containing the decontamination solution (normally 10% nitric acid). Other decontamination techniques such as wiping, brushing or lancing with caustic or commercial aqueous decontamination compounds are also used. Preparation necessary to meet 299-H physical limitations and disposal facility requirements can include disassembly, cutting or other size-reducing methods. As the high level waste removal program progresses, a greater percentage of the equipment sent to 299-H will be prepared for disposal as low-level radioactive waste, mixed low-level radioactive waste, transuranic waste, or mixed transuranic waste. SRS believes that these activities are within the scope of Construction/Operating Permit #17,980-IW.

Section 4.2 of the F/H Area Tank Farm permit application (Reference 2) describes tank system decontamination activities, which are considered normal operations. Process equipment is normally decontaminated during removal from the waste tank system to protect personnel from unnecessary radiation exposure during removal and subsequent handling activities. Decontamination within the waste tank system is typically accomplished by flushing or spraying equipment with water or chemical solutions. If in-situ decontamination efforts are not effective to the extent necessary, supplemental decontamination may be required and performed at the 299-H facility to enable "hands on" evaluation and/or maintenance of equipment (Reference 2, application section 4.1). If equipment cannot be repaired or otherwise reused, it is then prepared for disposal. Wastewater generated during 299-H decontamination activities is collected in its wastewater collection tank and then transferred to the H-Area Tank Farm.

Decontamination activities conducted at 299-H are described in the permit application for the 299-H Waste Collection Tank and are consistent with "normal operations" described in Section 4.2 of the F/H Area Tank Farm permit application. As 299-H is close-coupled to the H-Area Tank Farm, the SRS deems it appropriate to:

- Incorporate 299-H facility operations and permitted components into the F/H Area Tank Farm wastewater permit (Reference 2); and
- Delete the 299-H facility wastewater permit (Reference 1)

This proposal is consistent with the SRS goal of consolidating HLW system wastewater permits.

This matter has previously been discussed between SCDHEC and SRS staff. Please contact Gene Laska (803/725-8838) if there are any questions.

Yours very truly,

JW Cook for

D. E. Gordon, Manager
Environmental Support Section
Environmental Protection Department
Westinghouse Savannah River Company, LLC

gl:aeo
c: S. Sherrit, SCDHEC
M. C. Reece, SCDHEC, Lower Savannah District
A. B. Gould, 703-A

bc: J. D. Arnett, 703-A
G. S. Hoover, 703-A
P. M. Allen, 742-A
M. N. Borders, 704-56H
D. A. Broaden, 703-H
R. M. Campbell, 703-H
W. C. Clark, Jr., 241-100F
H. Conner, 703-H
N. R. Davis, 703-H
W. T. Davis, Jr., 707-H
J. N. Dewes, 703-H
V. G. Dickert, 703-H
M. L. Gilles, 704-56H
J. R. Harvey, 225-8H
K. A. Hauer, 704-71S
M. Hawkins, 742-A
C. R. Hayes, Jr., 703-H
M. D. Johnson, 703-H
G. H. Laska, 742-A
W. I. Lewis, 703-H
T. J. Lex, 703-H
N. J. Lowry, 742-A
L. C. Martin, 742-A
M. S. Miller, 703-H
J. V. Odum, 742-A
R. J. Petras, 703-H
S. Piccolo, 703-H
R. A. Runnels, 707-H
E. Saldivar, Jr., 742-4G
P. H. Stevens, 703-H
S. L. Tibrea, 742-3G
S. K. Wilkerson, 704-71S
R. W. Wilson, 704-71S
EPD File, 742-A
Records Processing, 773-52A

File Info:
HLW, 299-H
10040
DOE 1-8.a(1)
Permanent

W-0517

Westinghouse
Savannah River Company
Aiken, SC 29808

October 5, 2001

ESH-ESS-2001-00314

Ms. Adrienne F. Wright, Engineer
Industrial, Agricultural and Stormwater
Permitting Division
South Carolina Department of Health and
Environmental Control
2600 Bull Street
Columbia, South Carolina 29201

Dear Ms. Wright:

EQUIPMENT DISPOSITION DURING HIGH LEVEL WASTE TANK SYSTEM WASTE REMOVAL AND TANK CLOSURE ACTIVITIES

Ref.: (1) SRS/SCDHEC Tank Closure Meeting, 9/26/01
(2) Industrial Wastewater Closure Plan for the F- and H-Area High-Level Waste Tank Systems, Revision 2, 3/1/00
(3) Construction/Operating Permit #17,424-IW (F/H Area High Level Radioactive Waste Tank Farms)

This letter documents the general agreement between SCDHEC and Savannah River Site (SRS) personnel (Ref. 1) regarding the SRS path forward for dispositioning High Level Waste (HLW) System equipment from tank systems undergoing waste removal to tanks entering the closure phase. The proposed disposition alternative is to allow inclusion of equipment in the closure module for a tank without regard to the original location of that equipment. Equipment from one area (i.e., F or H Tank Farm) would not be included in a module from another area. The current closure plan (Ref. 2) allows equipment used during the waste processing, waste removal, and tank closure phases to be entombed only in the tank in which they reside during the closure phase.

The mutually agreed upon path forward is for the SRS to modify the referenced closure plan to include the scope and impacts of this disposition alternative. SRS is to also include all relevant aspects of affected equipment in the appropriate closure module to be submitted for SCDHEC approval with each tank system closure.

This proposal will enable SRS to more effectively manage resources necessary to adhere to the FFA schedule for waste removal/tank closure. Only equipment described in the F- and H-Area Tank Farm Permit Application (Ref. 3) and the referenced closure plan is reflected in this proposal.

Please contact Gene Laska (803/725-8838) if there are any questions.

Yours very truly,

D. E. Gordon, Manager
Environmental Support Section
Environmental Protection Department
Westinghouse Savannah River Company, LLC

gll/aeo
c: K. A. Collinsworth, SCDHEC
M. D. Sherritt, SCDHEC
M. C. Reece, SCDHEC, Lower Savannah District
A. B. Gould, 703-A

3

bc: P. M. Allen, 742-A
D. A. Broaden, 703-H
R. M. Campbell, 703-H
H. Conner, 703-H
N. R. Davis, 703-H
J. N. Dewes, 703-H
V. G. Dickert, 703-H
K. A. Hauer, 704-71S
M. Hawkins, 742-A
R. Hayes, Jr., 703-H
M. D. Johnson, 703-H
G. H. Laska, 742-A
W. I. Lewis, 703-H
T. J. Lex, 703-H
N. J. Lowry, 742-A
L. C. Martin, 742-A
J. V. Odum, 742-A
S. F. Piccolo, 703-H
E. Saldivar, Jr., 742-4G
S. L. Tibrea, 742-3G
EPD File, 742-A
Records Processing, 773-52A

File Info:
Tanks, Closure, Permit
10040
DOE 1-8.a(1)
Permanent

D H E C
PROMOTE PROTECT PROSPER
2600 Bull Street
Columbia, SC 29201-1708

August 17, 2001

Mr. Gene H. Laska
Westinghouse Savannah River Company
Environmental Protection Department
Bldg. 742-A
Aiken, SC 29808

RE: MODIFICATION of Construction Permit Number 17,424-IW
Construction Permit Number 14,520-IW
Construction Permit Number 14,338-IW
Reference: May 9, 2001 letter to A. Wright (SCDHEC) from G. Laska (SRS)
Savannah River Site

Dear Mr. Laska:

This Office has reviewed SRS's request to return high level waste tank 50 to normal high level waste operations. The F-area and H-area high level waste tank farms are permitted under construction permit number 17,424-IW. Tank 50 is currently permitted under construction permit number 14,520 to receive and transfer Effluent Treatment Facility (ETF) bottoms and filtrate from the In-Tank Precipitation (ITP) process. The ITP process is shut down and no longer requires a transfer path to tank 50. SRS contends that this change will help meet the need for additional storage space within the high level waste system. This modification affects the following construction permits: 14,338, 14,520 and 17,424-IW.

Permit Number 17,424-IW

This letter is the second modification of construction permit number 17,424-IW. Permit 17,424-IW was modified May 15, 1997 to include the addition of a stainless steel valve box west of tank 50 to serve as a diversion mechanism for flow originating at the ETF and for ITP filtrate.

The purpose of this second modification is to include high level waste tank 50 in permit 17,424-IW. The project description on page 2 of the permit is modified to reflect the following:

"The H-Area facility consists of the following equipment:

1. 28 tanks, four (4) of which are 750,000 gallon Type I tanks (number 9-12), three (3) are 1,030,000 gallon Type II tanks (numbers 13-15), seventeen (17) 1,300,000 gallon Type III/IIIA tanks (numbers 29-32, 35-43, 48, 49, 50, and 51), and four (4) 1,300,000 gallon Type IV tanks (numbers 21-24)."

By placing tank 50 back into normal tank farm operations, the modification of this permit eliminates the direct transfer of ETF bottoms and ITP filtrate to the Saltstone Production Facility (SPF) and the utilization of tank 50 to store dilute washwater. Upon completion of this modification, ETF evaporator bottoms will be rerouted through the valve box and transferred directly to the SPF.

Permit Number 14,520

Tank 50 was previously permitted under construction permit number 14,520. This modification to permit 17,424-IW supersedes permit 14,520.

Permit Number 14,338

The pipeline connecting tank 50 and the SPF in Z-Area was permitted under permit 14,338. The valve for tank 50 will be removed and a blind flange will be installed, thus eliminating the transfer path from tank 50 to SPF. The modification to permit 17,424-IW eliminates the inter-area pipeline and supersedes permit 14,338.

Should you have any questions or concerns, please contact me at (803) 898-4238.

Sincerely,

Adrienne F. Wright
Environmental Engineer Associate
Federal, Energy, Pre-Treatment Permitting Section
Bureau of Water
wrightaf@columb32.dhec.sc.us

cc: Scott Simons, Lower Savannah EQC District (w/copy of May 9 SRS letter)

f:\users\wrightaf\documents\srs\constr\17424-M2 HLW Tank 50.doc

W-0040
W-0517

Westinghouse
Savannah River Company
Aiken, SC 29808

May 9, 2001

ESH-ESS-2001-00145

Ms. Adrienne F. Wright, Engineer
Industrial, Agricultural and Stormwater
Permitting Division
South Carolina Department of Health and
Environmental Control
2600 Bull Street
Columbia, South Carolina 29201

Dear Ms. Wright:

RE-DESIGNATION OF HIGH LEVEL WASTE TANK 50 AT THE SAVANNAH RIVER SITE

SRS requests SCDHEC concurrence to allow a modification placing High Level Waste (HLW) Tank 50 into normal high level waste operations. This change meets the need for additional storage space within the HLW system. In addition to the process modifications described below, SRS requests that Tank 50 be administratively controlled under Construction/ Operating Permit # 17424-IW for the F- and H-Area HLW Tank Farms. Upon final transfer of the existing Tank 50 contents to the Saltstone Production Facility (SPF) SRS requests that Construction/Operating Permit #14520 be deleted. These modifications will not require a change to the existing permit conditions or requirements of Construction/ Operating Permit # 17424-IW.

Tank 50 is a 1.3 million gallon Type IIIA primary tank contained within a carbon steel secondary tank. Originally, Tank 50 was to receive and transfer Effluent Treatment Facility (ETF) bottoms and filtrate from the In-Tank Precipitation (ITP) process. In May 1997, SCDHEC approved a modification to install a valve box adjacent to Tank 50. The valve box allows direct transfer of ETF bottoms and ITP filtrate to the SPF and the utilization of Tank 50 to store dilute washwater.

The modification proposed in this memorandum eliminates the direct transfer path between ETF and Tank 50. Additionally, the modification eliminates the transfer path between the ITP Filter/Stripper Building and Tank 50. Upon completion of the modification, ETF evaporator bottoms will be routed through the valve box and transferred directly to the SPF. The ITP Filter/Stripper Building has been layed-up for extended shutdown and therefore no longer requires a transfer path to Tank 50.

Tank 49 material will be added to Tank 50 and then the contents of Tank 50 will be transferred to and processed within the SPF. It is anticipated that the SPF will be ready to process Tank 50 contents by April 2002. Following SCDHEC concurrence of this request, minor equipment modifications will be made to allow for normal operations. A process flow diagram highlighting these changes is attached.

SRS may incorporate processing enhancements - such as additional storage capacity in the path between the ETF and the SPF - in the future. SCDHEC approval will be obtained prior to implementing such enhancements.

This modification improves the overall HLW system by adding 1.3 million gallons of Type IIIA storage space without imposing undue restrictions to SRS facilities either upstream or downstream of the HLW Tank Farms.

If you require additional information or need any clarification, please feel free to call me at (803) 725-8838. Thank you for your help.

Yours truly,

G. H. Laska
Environmental Support Section
Environmental Protection Department

ghl/ths
Attachment

c: A. B. Gould, 703-A
C. V. Anderson, 703-A
R. O. Baker, 703-A
S. F. Piccolo, 703-H
M. D. Johnson, 703-H
T. J. Lex, 703-H
S. S. Cathey, 703-H
J. N. Dewes, 703-H
M. L. Giles, 704-56H
R. M. Campbell, 703-H

3

bc: G. S. Hoover, 703-A
D. T. Bignell, 742-A
P. J. Hill, 704-56H
R. D. Reeves, 703-H
R. M. Campbell, 703-H
A. R. Gough, 730-B
J. V. Odum, 742-A
D. E. Gordon, 742-A
W.L. Payne, 742-A
EPD Fileroom, 742-A
Records Processing, 773-52A

File Info:
HLW, Tank 50
000000;
DOE 00000
Permanent

1A PIPING ARRANGEMENT

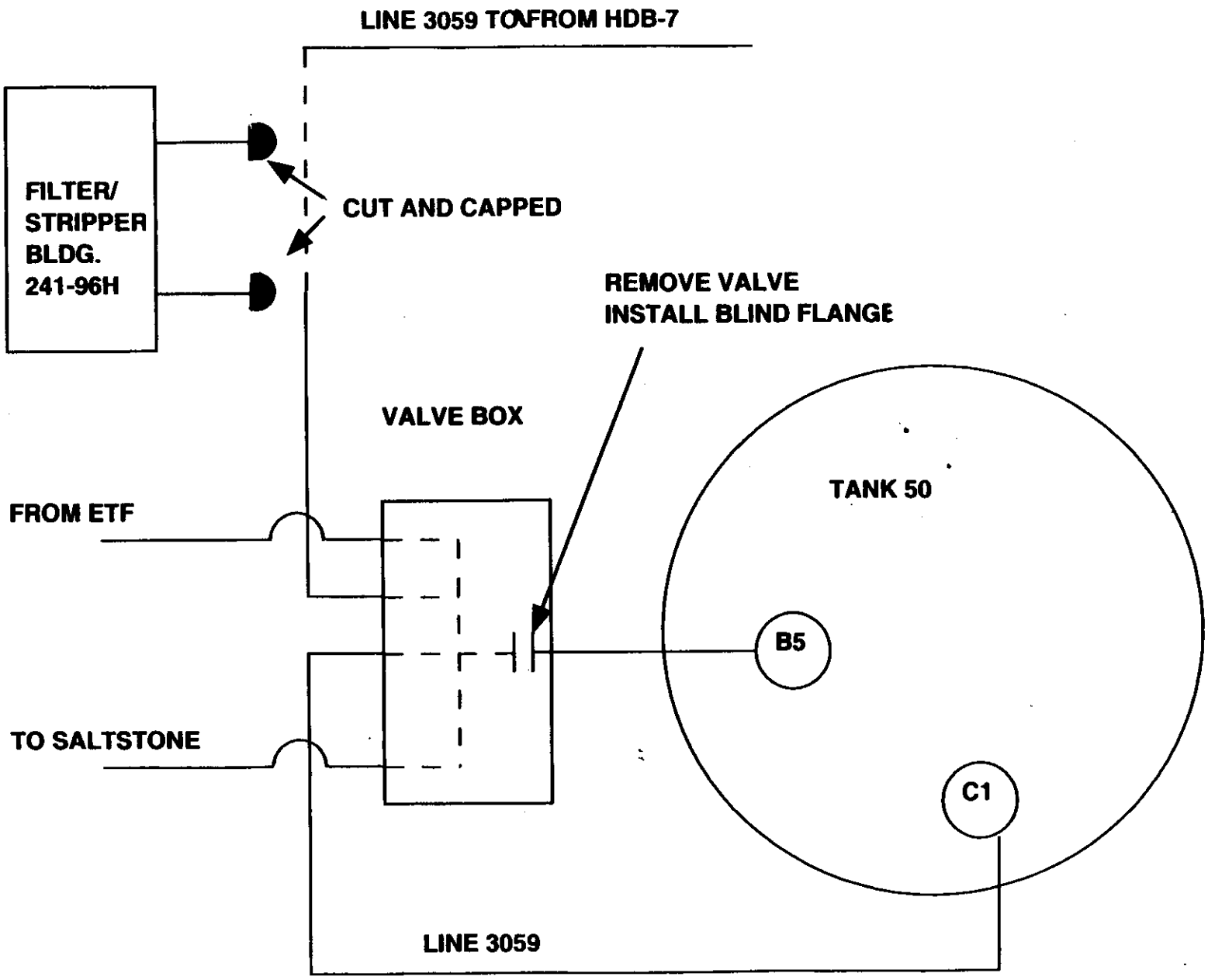

RON REEVES 8-8804

1

Permits Associated With Returning Tank 50 To Tank Farm Service

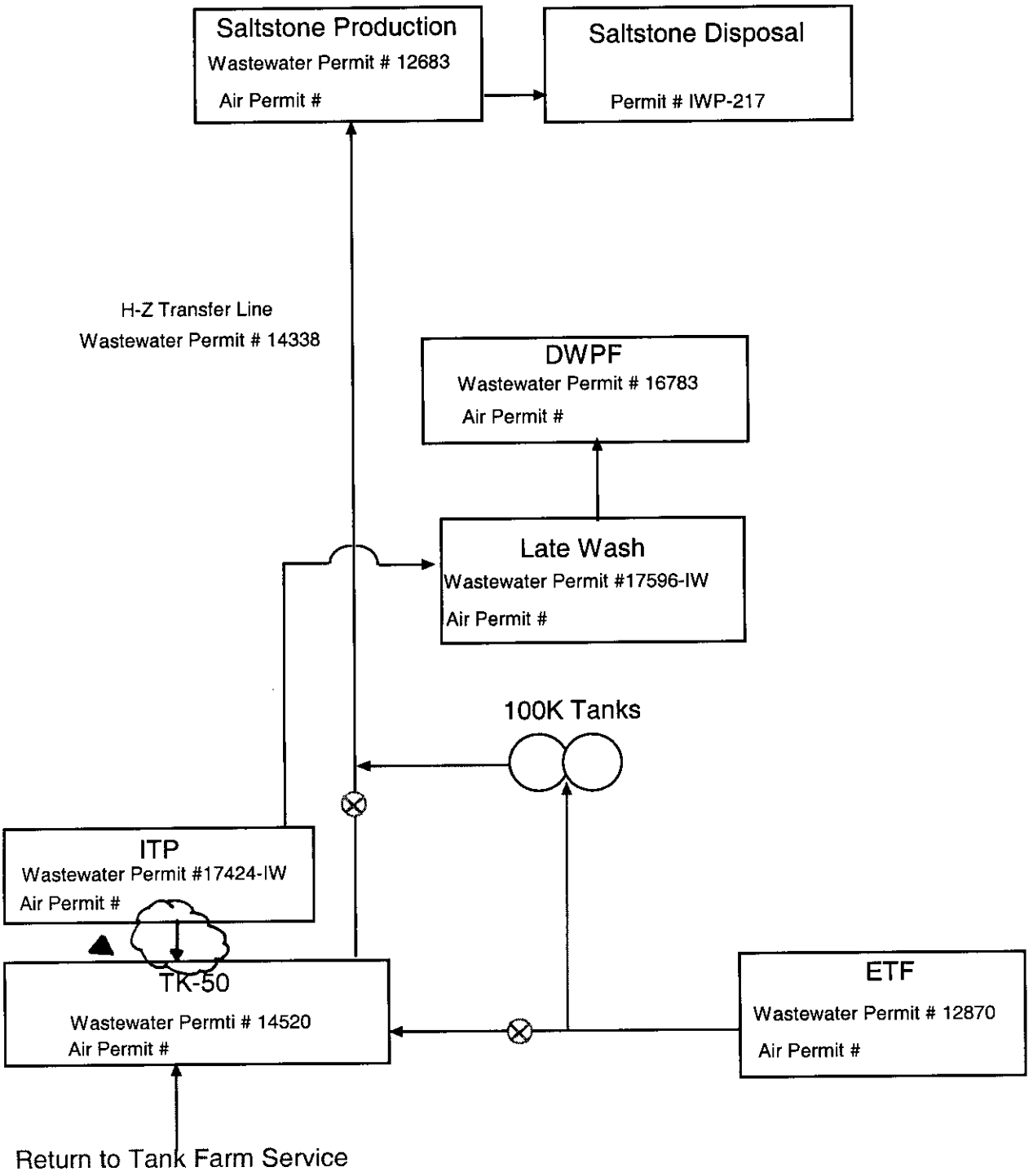

Action/Project	Permits Potentially Impacted
Restart Saltstone	None
Transfer 50 to Saltstone	None
Return Tank 50 to Tank Farm Service	14520,12683, IWP-217, 12780, 17424
100 K Tanks	12870, 14520, 14338, 12683, IWP-217

Red = Potential mods. to existing permit logic

NOTE: Certain permits will only be impacted if waste characterization or flow rates change.

TANK FARM PERMIT #17424-IW

AS-BUILT TANK 50 # 14520

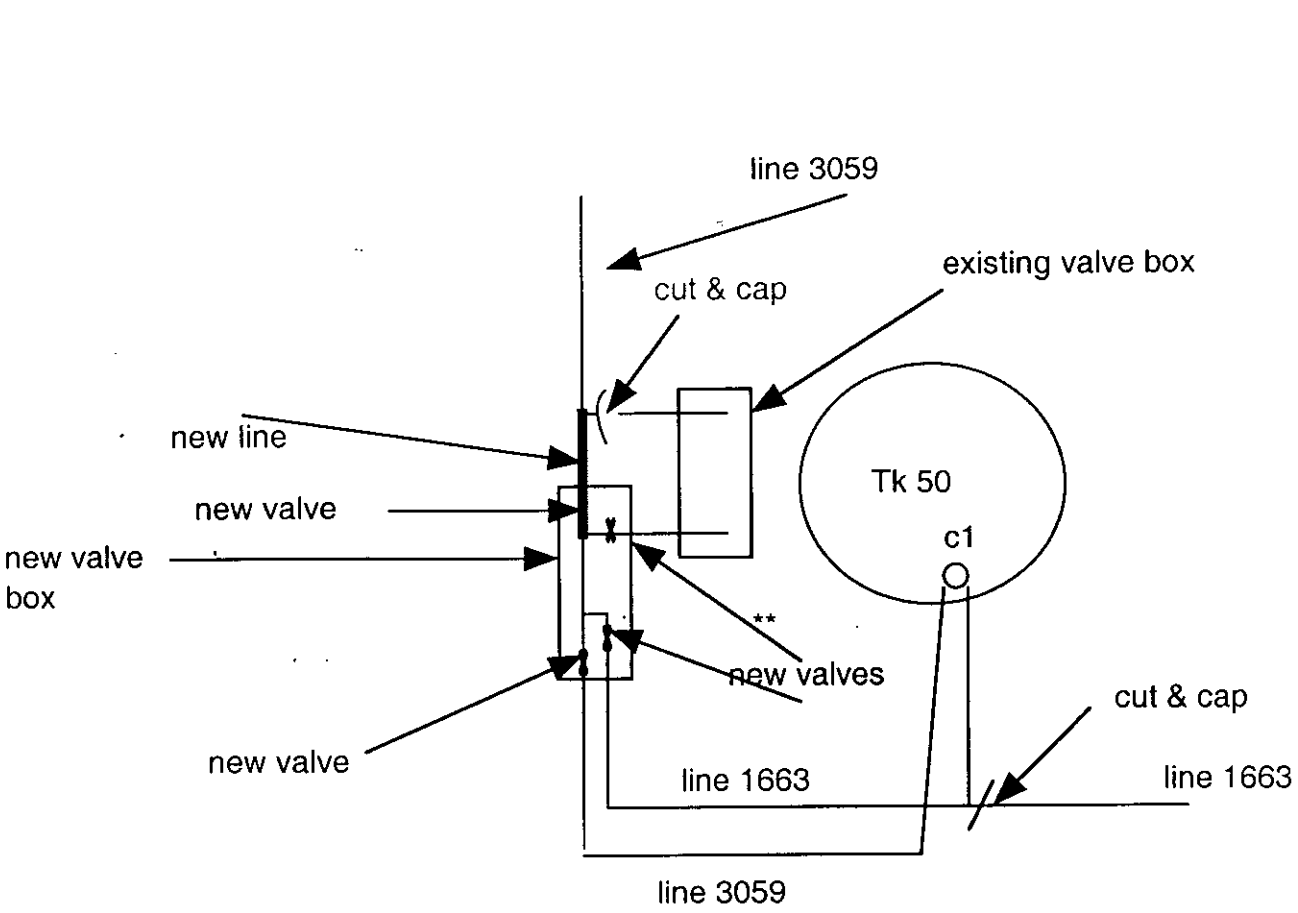

** Use grayloc connectors so when tank is empty, valve can be removed and blind flange installed to isolate line.

Larry Haney

07/19/01 10:16 AM

To: Rm Campbell/WSRC/Srs@srs, Cary Stevens/BSRI/Srs@Srs
cc: Chuck Hayes/WSRC/Srs@srs, Sharon Nicodemus/WSRC/Srs@Srs, Gene Laska/WSRC/Srs@Srs, Nancy Lowry/WSRC/Srs@Srs, Don Gordon/WSRC/Srs@Srs, Joseph Odum/WSRC/Srs@Srs
Subject: Saltstone Permit

Just a note to let you know that SCDHEC Solid Waste Division called this week and asked about our plans to modify the waste stream going to Saltstone. SCDHEC's call was to remind us that a permit modification to the industrial solid waste landfill permit would be needed if the waste stream is changed. (According to the Industrial Solid Waste Landfill regulations we must notify and obtain approval from SCDHEC prior to making any physical or chemical changes to the waste stream. The industrial solid waste permit for the Saltstone disposal facility also states that SCDHEC should be notified if the radioactive composition of the Z-Area Saltstone varies significantly from that identified in the application).

We realize that several options are being explored. Please keep EPD informed as to any changes to the Saltstone waste stream so that we may obtain SCDHEC's approval in a timely manner and avoid possible delays in start up. If you have any questions or if we can be of help please let me know. Thanks for your help in this matter.

SRS
savannah river site
TM

WESTINGHOUSE SAVANNAH RIVER COMPANY
INTEROFFICE MEMORANDUM

April 17, 2001

HLW-REG-2001-00025

TO: G. L. LASKA, 742-A

FROM: R. D. REEVES, 703-H
(8-8804) RDR

RE-DESIGNATION OF HIGH LEVEL WASTE TANK 50 (U)

SCDHEC concurrence is requested to allow Tank 50 to be placed into normal high level waste (HLW) operations. This change is necessary due to the continuing need for available storage space within the HLW system. HLWEC requests that Tank 50 be administratively controlled under Construction/ Operating Permit # 17424-IW for the F- and H-Area HLW Tank Farms. HLWEC further requests that Construction/Operating Permit #14520 be deleted upon final transfer of the existing Tank 50 contents to the Saltstone Production Facility (SPF).

Tank 50 is a 1.3 million gallon Type IIIA primary tank contained within a carbon steel secondary tank. The original purpose for Tank 50 was to receive and transfer Effluent Treatment Facility (ETF) bottoms and filtrate from the In-Tank Precipitation (ITP) process. In May 1997, SCDHEC approved[1] of a modification to install a valve box adjacent to Tank 50 to allow direct transfer of ETF bottoms and ITP filtrate to the SPF. With the valve box addition, Tank 50 was to store dilute washwater. Because of the limited amount of currently available storage space, Tank 50 will be utilized for normal HLW storage and processing.

The current contents of Tank 50 will be transferred to and processed within the SPF. It is anticipated that the SPF will be ready to process the current Tank 50 contents by April 2002. When the tank is empty, minor equipment modifications will be made to allow for normal operations. Attached is a process flow diagram highlighting these changes. These modifications will not require a change to the existing permit conditions or requirements of Construction/ Operating Permit # 17424-IW.

If you have any questions, please contact me at 208-8804.

[1] Letter, Hackett to Cook, 5/15/97

SRS
savannah river site
TM

WESTINGHOUSE SAVANNAH RIVER COMPANY
INTEROFFICE MEMORANDUM

April 19, 2001

HLW-REG-2001-00025

TO: G. L. LASKA, 742-A

FROM: R. D. REEVES, 703-H
(8-8804)

RE-DESIGNATION OF HIGH LEVEL WASTE TANK 50 (U)

SCDHEC concurrence is requested to allow Tank 50 to be placed into normal high level waste (HLW) operations. This change is necessary due to the continuing need for available storage space within the HLW system. HLWEC requests that Tank 50 be administratively controlled under Construction/ Operating Permit # 17424-IW for the F- and H-Area HLW Tank Farms. HLWEC further requests that Construction/Operating Permit #14520 be deleted.

Tank 50 is a 1.3 million gallon Type IIIA primary tank contained within a carbon steel secondary tank. The original purpose for Tank 50 was to receive and transfer Effluent Treatment Facility (ETF) bottoms and filtrate from the In-Tank Precipitation (ITP) process . In May, 1997, SCDHEC approved[1] of a modification to install a valve box adjacent to Tank 50 to allow direct transfer of ETF bottoms and ITP filtrate to the Saltstone Production Facility (SPF). With the valve box addition, Tank 50 was to store dilute washwater. Because of the limited amount of currently available storage space, Tank 50 will be utilized for normal HLW storage and processing.

The current contents of Tank 50 will be transferred to and processed within the SPF. That When the tank is empty, minor equipment modifications will be made to allow for normal operations. Attached is a process flow diagram highlighting these changes. These modifications will not require a change to the existing permit conditions or requirements of Construction/ Operating Permit # 17424-IW.

If you have any questions, please contact me at 208-8804.

[1] Letter, Hackett to Cook, 5/15/97

SRS
savannah river site
TM

WESTINGHOUSE SAVANNAH RIVER COMPANY
INTEROFFICE MEMORANDUM

August 07, 2001

HLW-REG-2001-00045
Rev. 1

TO: ESH&QA Environmental Protection Department, 742-A

FROM: R. D. REEVES, 703-H
(8-8804)

ENVIRONMENTAL REQUIREMENTS FOR 2H (242-16H) EVAPORATOR RESTART (U)

Approvals:

Wastewater & Regulatory Support
ESH&QA – EPD
G. H. Laska 8/7/01
Date

Air & Regulatory Support
ESH&QA – EPD
D. D. Hoel 8/7/01
Date

Air & Regulatory Support
ESH&QA – EPD
C. M. Cook 8/7/01
Date

Summary

Environmental compliance requirements for the restart of the 2H Evaporator are complete. The 2H Evaporator may be restarted and returned to normal operating configuration as existed prior to the cleaning demonstration.

Background

Over the past several months, HLWEC has corresponded with EPD numerous times regarding the 2H Evaporator cleaning effort. Issues discussed in this correspondence included wastewater permitting, radiological and non-radiological air permitting, and air monitoring. Evaporator cleaning is expected to complete on August 21, 2001 and restart is expected on November 12, 2001. In support of restart, HLWEC and EPD agree that there are no additional wastewater or air requirements to be met prior to restart. Signatures by the EPD Subject Matter Experts (SMEs) above serve as EPD concurrence for 2H Evaporator restart.

Wastewater
Reference: *Wright to Laska, November 7, 2000.*

On November 7, 2000, SCDHEC approved the 2H Evaporator cleaning activity as a demonstration project. This approval is valid for one year from the date of system construction. The demonstration project was constructed on December 7, 2000 and cleaning is expected to complete on August 21, 2001. Evaporator restart and normal operations are expected on November 12, 2001. There have been no significant changes in the demonstration process or operating plan as approved by SCDHEC. All environmental compliance matters associated with wastewater are complete for the restart of the 2H Evaporator.

Radiological Air Emissions
References:
1. *NESHAP Evaluation: 2H Evaporator Cleaning Demonstration Unit, ESH-ESS-2000-00389*
2. *Addendum 1 to the Radiological NESHAP Evaluation contained in the 2H Evaporator Demonstration Unit Air Permitting Exemption Report, HLW-REG-2001-00005*
3. *Request for SCDHEC Approval to Use Grab Sampling in lieu of Continuous Monitoring of the 2H Evaporator Neutralization Tank, ESH-ESS-2001-00054*
4. *Air Emissions Evaluation for Uranyl Carbonate Addition into Tanks 38 and 43, HLW-REG-2001-00024*

A NESHAP evaluation determined that radiological dose rates from the 2H evaporator cleaning activity did not require construction approval, startup notification, or startup testing under 40 CFR Part 61. The same evaluation determined that calculated dose rates would require continuous monitoring of the neutralization tank vent. Because the passive design of the tank vent system makes isokinetic monitoring impracticable and the emissions rates are constant, grab sampling was approved in lieu of continuous monitoring. Upon restart, the radiological source term and emission rates for the 2H evaporator will correspond to normal operations prior to cleaning. All environmental compliance matters associated with radiological air emissions are complete for the restart of the 2H Evaporator.

Non-radiological Air Emissions
References:
1. *Exemption Approval: 2H Evaporator Cleaning Demonstration Unit, ESH-ESS-2000-00367*
2. *Exemption Approval: Revised Tank Fill Rates for the 2H Evaporator Demonstration Unit, ESH-ESS-2001-00072*
3. *Air Emissions Evaluation for Uranyl Carbonate Addition into Tanks 38 and 43, HLW-REG-2001-00024*
4. *Exemption Approval: Additional Pollutants for the 2H Evaporator Cleaning Demonstration Unit, ESH-ESS-2001-00085*
5. *Exemption Approval: 2H Evaporator Cleaning Demonstration Unit neutralization Tank Mercury Emissions, ESH-ESS-2001-00179*
6. *Revised Emission Data – 2H Evaporator Cleaning Demonstration Unit, HLW-REG-2001-00044*

Engineering evaluations identified several non-radiological pollutants potentially released by the 2H Evaporator Cleaning Demonstration Unit. In every case, emission rates for these pollutants were very low and qualified for EPD exemptions. Operating parameters that affect emission rates have been controlled and monitored to ensure these low rates are maintained. No additional permitting or monitoring requirements have been identified. All environmental compliance matters associated with non-radiological air emissions are complete for the restart of the 2H Evaporator.

In the event that changes are made to normal operating conditions or parameters, then HLWEC will review such changes for impacts to this approval and inform EPD SMEs as appropriate.

RDR:rdr
Att.

W-0517

Gene Laska

To: wrightaf@columb32.dhec.state.sc.us
cc:
cc:
Subject: SRS Update on 2H Evaporator

08/06/01 01:26 PM

Adrienne,

The following status of the 2H Evaporator is provided for your information:

The 242-16H Evaporator Cleaning Project has been successfully completed. The evaporator will now transition into restart activities. Upon the completion of restart, the evaporator will resume normal operations as detailed in the F- and H-Tank Farm Industrial Wastewater Permit Application (April, 1991).

The cleaning demonstration equipment will be maintained through the restart phase and, perhaps permanently. If it is determined that the equipment should be permanently maintained, a permit modification package will be submitted to your office for review and approval. The equipment will not be utilized beyond 12/13/01 unless a permit modification is approved by your office.

If you have any questions regarding 2H Evaporator operations, please contact me at 803/725-8838.

Gene Laska
SRS Environmental Protection Dept
Environmental Support Section

SRS
savannah river site
TM

WESTINGHOUSE SAVANNAH RIVER COMPANY
INTEROFFICE MEMORANDUM

June 26, 2001

HLW-REG-2001-00045

TO: ESH&QA Environmental Protection Department, 742-A

FROM: R. D. REEVES, 703-H RDR
(8-8804)

ENVIRONMENTAL REQUIREMENTS FOR 2H (242-16H) EVAPORATOR RESTART (U)

Approvals:

Wastewater & Regulatory Support ESH&QA – EPD	G. H. Laska	6-26-01 Date
Air & Regulatory Support ESH&QA – EPD	D. D. Hoel	6/26/01 Date
Air & Regulatory Support ESH&QA – EPD	C. M. Cook	6/26/01 Date

Summary

Environmental compliance requirements for the restart of the 2H Evaporator are complete. The 2H Evaporator may be restarted and returned to normal operating configuration as existed prior to the cleaning demonstration.

Background

Over the past several months, HLWEC has corresponded with EPD numerous times regarding the 2H Evaporator cleaning effort. Issues discussed in this correspondence included wastewater permitting, radiological and non-radiological air permitting, and air monitoring. Evaporator cleaning is expected to complete on August 21, 2001 and restart is expected on November 12, 2001. In support of restart, HLWEC and EPD agree that there are no additional wastewater or air requirements to be met prior to restart. Signatures by the EPD Subject Matter Experts (SMEs) above serve as EPD concurrence for 2H Evaporator restart.

Wastewater
Reference: *Wright to Laska, November 7, 2000.*

On November 7, 2000, SCDHEC approved the 2H Evaporator cleaning activity as a demonstration project. This approval is valid for one year from the date of system construction. The demonstration project was constructed on December 7, 2000 and cleaning is expected to complete on August 21, 2001. Evaporator restart and normal operations are expected on November 12, 2001. There have been no significant changes in the demonstration process or operating plan as approved by SCDHEC.

Radiological Air Emissions
References:
1. *NESHAP Evaluation: 2H Evaporator Cleaning Demonstration Unit, ESH-ESS-2000-00389*
2. *Addendum 1 to the Radiological NESHAP Evaluation contained in the 2H Evaporator Demonstration Unit Air Permitting Exemption Report, HLW-REG-2001-00005*
3. *Request for SCDHEC Approval to Use Grab Sampling in lieu of Continuous Monitoring of the 2H Evaporator Neutralization Tank, ESH-ESS-2001-00054*
4. *Air Emissions Evaluation for Uranyl Carbonate Addition into Tanks 38 and 43, HLW-REG-2001-00024*

A NESHAP evaluation determined that radiological dose rates from the 2H evaporator cleaning activity did not require construction approval, startup notification, or startup testing under 40 CFR Part 61. The same evaluation determined that calculated dose rates would require continuous monitoring of the neutralization tank vent. Because the passive design of the tank vent system makes isokinetic monitoring impracticable and the emissions rates are constant, grab sampling was approved in lieu of continuous monitoring. Upon restart, the radiological source term and emission rates for the 2H evaporator will correspond to normal operations prior to cleaning.

Non-radiological Air Emissions
References:
1. *Exemption Approval: 2H Evaporator Cleaning Demonstration Unit, ESH-ESS-2000-00367*
2. *Exemption Approval: Revised Tank Fill Rates for the 2H Evaporator Demonstration Unit, ESH-ESS-2001-00072*
3. *Air Emissions Evaluation for Uranyl Carbonate Addition into Tanks 38 and 43, HLW-REG-2001-00024*
4. *Exemption Approval: Additional Pollutants for the 2H Evaporator Cleaning Demonstration Unit, ESH-ESS-2001-00085*
5. *Exemption Approval: 2H Evaporator Cleaning Demonstration Unit neutralization Tank Mercury Emissions, ESH-ESS-2001-00179*
6. *Revised Emission Data – 2H Evaporator Cleaning Demonstration Unit, HLW-REG-2001-00044*

Engineering evaluations identified several non-radiological pollutants potentially released by the 2H Evaporator Cleaning Demonstration Unit. In every case, emission rates for these pollutants were very low and qualified for EPD exemptions. Operating parameters that affect emission rates have been controlled and monitored to ensure these low rates are maintained. No additional permitting or monitoring requirements have been identified.

In the event that changes are made to normal operating conditions or parameters, then HLWEC will review such changes for impacts to this approval and inform EPD SMEs as appropriate.

RDR:rdr
Att.

W-0040
W-0517

Westinghouse
Savannah River Company
Aiken, SC 29808

May 9, 2001

ESH-ESS-2001-00145

Ms. Adrienne F. Wright, Engineer
Industrial, Agricultural and Stormwater
Permitting Division
South Carolina Department of Health and
Environmental Control
2600 Bull Street
Columbia, South Carolina 29201

Dear Ms. Wright:

RE-DESIGNATION OF HIGH LEVEL WASTE TANK 50 AT THE SAVANNAH RIVER SITE

SRS requests SCDHEC concurrence to allow a modification placing High Level Waste (HLW) Tank 50 into normal high level waste operations. This change meets the need for additional storage space within the HLW system. In addition to the process modifications described below, SRS requests that Tank 50 be administratively controlled under Construction/ Operating Permit # 17424-IW for the F- and H-Area HLW Tank Farms. Upon final transfer of the existing Tank 50 contents to the Saltstone Production Facility (SPF) SRS requests that Construction/Operating Permit #14520 be deleted. These modifications will not require a change to the existing permit conditions or requirements of Construction/ Operating Permit # 17424-IW.

Tank 50 is a 1.3 million gallon Type IIIA primary tank contained within a carbon steel secondary tank. Originally, Tank 50 was to receive and transfer Effluent Treatment Facility (ETF) bottoms and filtrate from the In-Tank Precipitation (ITP) process. In May 1997, SCDHEC approved a modification to install a valve box adjacent to Tank 50. The valve box allows direct transfer of ETF bottoms and ITP filtrate to the SPF and the utilization of Tank 50 to store dilute washwater.

The modification proposed in this memorandum eliminates the direct transfer path between ETF and Tank 50. Additionally, the modification eliminates the transfer path between the ITP Filter/Stripper Building and Tank 50. Upon completion of the modification, ETF evaporator bottoms will be routed through the valve box and transferred directly to the SPF. The ITP Filter/Stripper Building has been layed-up for extended shutdown and therefore no longer requires a transfer path to Tank 50.

Tank 49 material will be added to Tank 50 and then the contents of Tank 50 will be transferred to and processed within the SPF. It is anticipated that the SPF will be ready to process Tank 50 contents by April 2002. Following SCDHEC concurrence of this request, minor equipment modifications will be made to allow for normal operations. A process flow diagram highlighting these changes is attached.

SRS may incorporate processing enhancements - such as additional storage capacity in the path between the ETF and the SPF - in the future. SCDHEC approval will be obtained prior to implementing such enhancements.

This modification improves the overall HLW system by adding 1.3 million gallons of Type IIIA storage space without imposing undue restrictions to SRS facilities either upstream or downstream of the HLW Tank Farms.

If you require additional information or need any clarification, please feel free to call me at (803) 725-8838. Thank you for your help.

Yours truly,

G. H. Laska
Environmental Support Section
Environmental Protection Department

ghl/ths
Attachment

c: A. B. Gould, 703-A
C. V. Anderson, 703-A
R. O. Baker, 703-A
S. F. Piccolo, 703-H
M. D. Johnson, 703-H
T. J. Lex, 703-H
S. S. Cathey, 703-H
J. N. Dewes, 703-H
M. L. Giles, 704-56H
R. M. Campbell, 703-H

bc: G. S. Hoover, 703-A
D. T. Bignell, 742-A
P. J. Hill, 704-56H
R. D. Reeves, 703-H
R. M. Campbell, 703-H
A. R. Gough, 730-B
J. V. Odum, 742-A
D. E. Gordon, 742-A
W.L. Payne, 742-A
EPD Fileroom, 742-A
Records Processing, 773-52A

File Info:
HLW, Tank 50
000000;
DOE 00000
Permanent

TANK 50 PIPING ARRANGEMENT

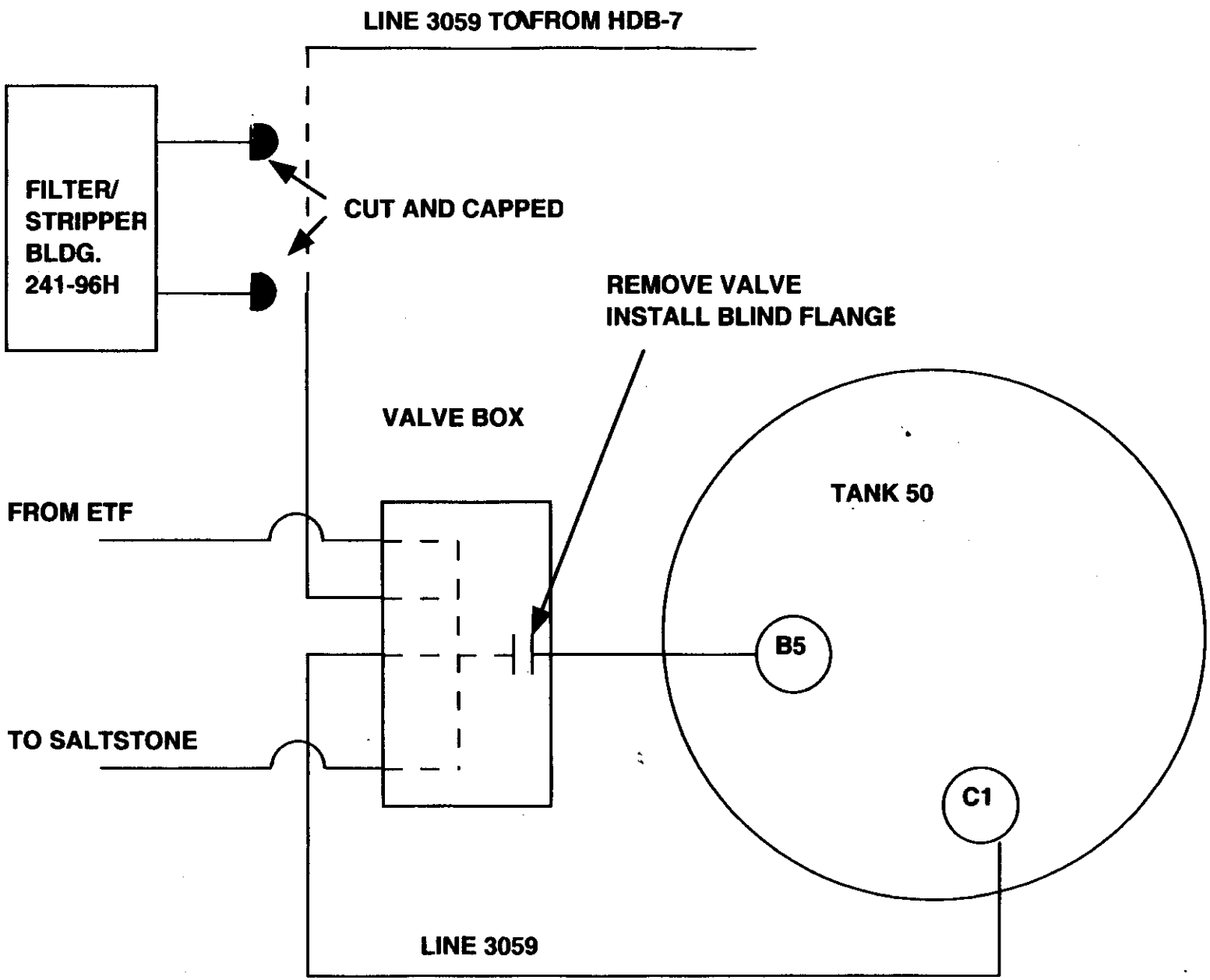

W-0517

SRS
savannah river site

WESTINGHOUSE SAVANNAH RIVER COMPANY
INTEROFFICE MEMORANDUM

HLW-REG-2001-00026

March 28, 2001

TO: Gene Laska, 742-A

FROM: Stuart Stinson, 703-H

SUBJECT: **ADDITION OF URANYL CARBONATE TO TANKS 38 AND 43; INSTALLATION OF FLYGT MIXERS TO TANK 43**

References:

1. Permit Application for an Industrial Wastewater Treatment Facility for the F and H-area HLW Tank Farms (U) Rev 0 - April, 1991
2. Wastewater Permit (17,424-IW)
3. ESH-ESS-99-0328, "High Level Waste Tank Closure/Waste Removal"
4. HLW-STE-2001-00041, "Fate of Components in Uranyl Carbonate Solution"

Background:

The 2H Evaporator is currently out of service due to the accumulation of solids containing uranium and sodium aluminosilicates. The solids are not a criticality safety issue. However, there is a credible, small risk that continued operation of the evaporator could generate conditions in which a criticality could occur. In order to prevent the creation of a situation in which a criticality is credible, HLW plans to add a solution of uranyl carbonate containing depleted uranium to the 2H Evaporator drop tanks (Tanks 38 and 43). The addition of the solution will reduce the concentration of uranium (U-235) to below the inherently safe enrichment of 0.96% U-235 or some other limit that is determined to be safe in the evaporator.

In order to adequately mix the uranyl carbonate solution with the tank supernate, Flght mixers are to be installed in Tank 43.

Permit Issues:

Section 4.2 of the Wastewater Permit Application [1] for "Normal Operations" states (Page 42) that normal operations include:

1. "Adding process chemicals directly to the waste tanks to: (1) adjust the pH and nitrite/nitrate concentrations, (2) remove accumulated salt cake and/or sludge materials, (3) clean/decontaminate the waste tanks, process equipment, and transfer lines/equipment, (4) process salt solutions during ITP operations, and (5) process sludge during sludge processing operations, and"

2. Making alterations (i.e., process chemicals, process instrumentation, process piping, and process equipment) which do not change the effluent waste characterizations or flow rates specified in Section 5.2."

Section 4.2 also states (See "Other Alterations", Page 45) that other alterations (listed below) which improve process operations and "do not cause the effluent waste characterization to be exceeded, or change the effluent flow rates are considered normal. These alterations may include:"

1. Adding or removing process equipment (i.e., agitators, slurry pumps, and transfer pumps to the waste tanks.

Use of Flght mixers in Tanks 18 and 19 has previously been approved as an acceptable technology by SCDHEC [(2)].

Special Condition #4 in the Partial Permit to Operate (March 3, 1993) [(3)] states that "No chemicals (process or otherwise) shall be added to the waste tanks which will alter the composition of the F/H ETF effluent from that which was evaluated for the NPDES permit."

The addition of uranyl carbonate to the tanks has been evaluated to determine its effect on ETF effluents. The proposed chemical addition will not alter the characteristics of ETF effluents [(4)]. (A copy of the referenced document can be provided if necessary.)

Conclusion:

The proposed activity is within the bounds of the wastewater permit requirements.

Westinghouse
Savannah River Company
Aiken, SC 29808

February 5, 2001

ESH-ESS-2001-00036

Ms. Adrienne F. Wright, Engineer
Industrial, Agricultural and Stormwater
Permitting Division
South Carolina Department of Health and
Environmental Control
2600 Bull Street
Columbia, South Carolina 29201

Dear Ms. Wright:

L-AREA SETTLER TANK SLUDGE PROCESSING UNIT

Ref: Telecon, W. Payne, WSRC to M. Vickers, SCDHEC, October 14, 1997

In order to continue spent fuel operations (one of Spent Fuel Storage Division's (SFSD's) major missions), disassembly basin water clarity must be maintained at a premium. The disassembly basin system relies on a set of sandfilters to remove particulates that could cloud the water. These sand filters require a periodic backwash to regenerate the filter. The backwash is piped to a settler tank, which allows the solids to settle out before the supernate is pumped back into the basin. The volume in the settler tank is maintained so the sand filters can backwash without overflowing the tank into the basin. The level of the sludge in the L and K settler tanks is currently such that potential overflow is imminent, which would adversely impact spent fuel operations.

The 100 Area's settler tank sludge historically has been dispositioned through the High Level Waste (HLW) Tank System. The settler tank sludge was pumped to a sludge trailer, transported to H Area, and pumped into Tank 47. The settler tank sludge is listed as an influent on the Tank Farm Wastewater Treatment Permit #17424-IW. As the sludge is not high level waste, and due to the limited space in the tank farm, SFSD has developed the Sludge Processing Unit (SPU) as the alternative method for sludge disposal.

The SPU is basically a filter press system. The SPU will dewater the sludge, recycling the water back into the disassembly basin system. The resultant dewatered sludge will then be placed into B-12s and disposed of in the E-Area Vaults (EAV).

Per referenced telecon between M. Vickers and W. Payne, concurrence was received from SCDHEC on the following action: a notification would be provided to SCDHEC indicating that the Disassembly Basin water would be eliminated as a source to the Tank Farm. The equipment to dewater the sludge would be used as process equipment for recycle only. No additional approvals would be required.

SRS is providing this information as notification that the L-Area Settler Tank Sludge will no longer be an influent to the H-Tank Farm. The first processing of settler tank sludge is expected to occur in L-Area as early as April and possibly as late as June 2001. Once L-Area is complete, the SPU will be used to process the K-Area settler tank sludge and possibly P-Area and C-Area sludge.

If you require additional information or need any clarification, please feel free to call me at (803) 725-8838. Thank you for your help.

Yours truly,

GLaska

G. H. Laska
Environmental Protection Department

Ghl/ths

2

c: A. B. Gould, 703-A
C. V. Anderson, 703-A

bc: G. L. Burbage, 707-C
J. P. Cason, 704-K
B. L. Westover, 704-K
D. E. Gordon, 742-A
W.L. Payne, 742-A

EPD Fileroom, 742-A
Records Processing, 773-52A

File Info:
SCDHEC, SPU
Sludge;
10067;
DOE 14-1.c(1)
Review at 10-year intervals

B. L Westover, 704-K
J. P Cason, 704-K
G. L. Burbage. 707-C

Betsy Westover

To: Bill Payne/WSRC/Srs, Gene Laska/WSRC/Srs
cc: Joanna Cason, Greg Burbage/WSRC/Srs
Subject: Sludge Processing Unit (SPU) Description

01/29/01 04:58 PM

In order to continue spent fuel operations (one of SFSD's major missions), disassembly basin water clarity must be maintained at a premium. The disassembly basin system relies on a set of sand filters to remove particulates that could cloud the water. These sand filters require a periodic backwash to regenerate the filter. The backwash is piped to a settler tank which allows the solids to settle out before the supernate is pumped back into the basin. The volume in the settler tank is maintained so the sand filters can backwash without overflowing the tank into the basin. The level of the sludge in the L and K settler tanks is currently such that potential overflow is imminent, which would adversely impact spent fuel operations.

The 100 Area's settler tank sludge historically has been dispositioned through the High Level Waste (HLW) Tank System. The settler tank sludge was pumped to a sludge trailer, transported to H Area, and pumped into Tank 47. The settler tank sludge is listed as an influent on the tank farm waste water treatment permit. As the sludge is not high level waste, and due to the limited space in the tank farm, SFSD has developed the Sludge Processing Unit (SPU) as the alternative method for sludge disposal.

The SPU is basically a filter press system. The SPU will dewater the sludge, recycling the water back into the disassembly basin system. The resultant dewatered sludge will then be placed into B-12s and disposed of in the E Area Vaults (EAV).

The first processing of settler tank sludge will occur in L Area as early as April and as late as June. Once L Area is complete, the SPU will be used to process the K Area settler tank sludge and potentially P and C Area's.

If you should have any questions, contact either Joanna Cason (7-3735/11081) or myself (7-3636/17373).

Thanks

Betsy

cc:Mail for: Bill Payne

2

Subject: DISASSEMBLY BASIN SLUDGE
From: Bill Payne 10/14/97 4:01 PM
To: Hollis Martin at SRCCC04
cc: Chuck Hayes at SRCCA02
cc: Larry Haney at SRCCA16
cc: John Brookshire at SRCCA03
cc:

Lee,

I went ahead and discussed DB sludge with Larry Haney. He said the burial ground does not have a solid waste permit and all you will need to do to put the sludge there is meet their WAC.

As I understand what you told me, the DB waste is an influent source on the Tank Farm Wastewater Permit. You want to dewater DB water w/ a pressure filter, recycle it back to the DB, and dispose the sludge to the burial ground. Alternatively, you want to put the DB water in F/H-ETF. I called Melinda Vickers at DHEC. She said that a simple letter notifying her of the elimination of the DB water as a source to the Tank Farm in favor of disposing it in the ETF or burial ground would suffice. Approval would neither be necessary for it, nor for operation of the filter since it is being used as process equipment for recycle only.

If I've misstated anything, please correct me. Otherwise, send me a memo with the specifics of what you want to do and I'll write a notification to DHEC that will cover you.

Bill

Courtesy notification to DHEC on sludge path forward referencing this letter —

Bill Payne

01/25/01 07:15 AM

To: Betsy Westover@Srs
cc: Gene Laska/WSRC/Srs@Srs, Greg Burbage/WSRC/Srs@Srs, Joanna Cason@Srs
Subject: Re: Re[6]: L Area Settler Tank Sludge Processing Status

Three o'clock it is. We'll meet at my office in 742-A and move to another location if we need more room.

Bill
x5-3465
==========
Betsy Westover

Betsy Westover

To: Bill Payne/WSRC/Srs
cc: Joanna Cason, Gene Laska/WSRC/Srs, Greg Burbage/WSRC/Srs
Subject: Re[6]: L Area Settler Tank Sludge Processing Status

01/24/01 04:49 PM

Bill-

I have another meeting that morning, but 3:00pm should be good.
We'll plan on that unless I hear differently.

Thanks

Betsy

_____ Reply Separator _____
Subject: Re: Re[4]: L Area Settler Tank Sludge Processing Status
Author: Bill Payne at SRS
Date: 1/24/01 7:43 AM

Betsy,

If it's OK with you, lets meet in my office on Monday the 29th at 10:00 am. I'm not sure what hours you work, so if it would work better for you to meet late in the day so you could head home from here, we could do that instead. I think the latest Gene and I could meet would probably be 3:00 pm. Let me know which time is best.

(Embedded image moved to file: pic01228.pcx)

|--------+----------->

7

Betsy Westover

01/16/01
07:59 AM

To: Bill Payne/WSRC/Srs
cc: Greg Burbage, Joanna Cason, Gene Laska/WSRC/Srs
Subject: Re[4]: L Area Settler Tank Sludge Processing Status

Bill-

I think meeting on Monday 1/29/01 will be fine. We can come up to your office. It shouldn't take more than 1/2 hour to an hour depending on your questions. Let me know what time is good for you.

Betsy

Reply Separator

Subject: Re: Re[2]: L Area Settler Tank Sludge Processing Status
Author: Bill Payne at SRS
Date: 1/12/01 7:24 AM

Betsy,

I am already swamped next week with comments on a proposed mercury TMDL, meetings, and NPDES Permitting issues. The week after, I will be in Hilton Head at the Full CAB meeting on the 23rd, but back in the office on the 24th. Unfortunately, there is an EH environmental audit all that week. At this point in time, I don't know whether or not I'll have to play in the audit. If not, I can probably meet on the 25th (I'm open anytime as of right now). If you want to be safe, we could schedule it for the 29th (Monday). If we're only talking about a half hour or so and can do it in my

office, let me know and we'll try to cram it in next week. Sorry, but you've caught me at an extremely busy time due to some pressing regulatory issues.

(Embedded image moved to file: pic21159.pcx)

Betsy Westover

01/11/01
02:51 PM

To: Bill Payne/WSRC/Srs

cc: Greg Burbage, Joanna Cason, Gene Laska/WSRC/Srs

Subject: Re[2]: L Area Settler Tank Sludge Processing Status

Bill-

Sorry I didn't respond sooner, but I wanted to have the final path before discussing with you. Now that we have finally resolved all the issues and have determined our disposal path for the L Area Settler Tank Sludge, I'd like to get with you to determine how we should notify DHEC regarding this change. Let me know when you are

available, either next week or the following, and we will be glad to sit down with you to go over that path forward. Per the
project
schedule, hot runs are not scheduled until April at the earliest, so it is by then that we would need the final say that we can proceed.

Thanks

Betsy

_____ Reply Separator _____
_____
_____

Subject: Re: L Area Settler Tank Sludge Processing Status
Author: Bill Payne at SRS
Date: 10/30/00 7:23 AM

Betsy,

As long as DHEC doesn't decide that the filter presses need to be permitted as wastewater treatment units, then certified operators will not be necessary. We probably need to discuss this with DHEC very soon, just to make sure they don't surprise us with anything that could set back your plans

(Embedded image moved to file: pic20337.pcx)

```
|--------+----------------------->
|        |          Betsy        |
|        |          Westover     |
|        |                       |
|        |                       |
|        |                       |
|        |                       |
|        |                       |
|        |          10/25/00     |
|        |          09:44 AM     |
|        |                       |
|--------+----------------------->
        >
        ----------------------------------------------------------
        -----
        ---|
        |
```

To: Bill Payne/WSRC/Srs

cc: Joanna Cason, Greg Burbage

Subject: L Area Settler Tank Sludge Processing Status

Bill-

I just wanted to give you an update as to where we stand with the L Area Settler Tank Sludge processing.

The actual start date for processing has been pushed out until next March or so. We are in the process of obtaining new sample results as the data we had before was from the 1995 timeframe. After we confirm that nothing has changed and we meet the EAV WAC, I will then request your assistance in notifying/requesting approval of the state of our change in disposition path for this material. The one outstanding question that we need answered with these new results, is to confirm the waste will not be TRU. At this time, we are proceeding as if it is not TRU and will filter this sludge and send the dried filter cake to the EAV in B-12s. If TRU, then we would of course have to alter our disposal container as well as address any other issues.

One question you may be able to answer now is, will the operators working the filter press unit need any additional training as waste water operators? I don't think they do as we are not treating this as a waste water treatment facility, but I do want to confirm with you. Is this something you can answer now, or do you need our final confirmed disposition process to make that determination?

Let me know what you think.

Thanks

Betsy

D H E C
PROMOTE PROTECT PROSPER
2600 Bull Street
Columbia, SC 29201-1708

NOV 9

November 7, 2000

Mr. Gene Laska
Westinghouse Savannah River Company
Environmental Protection Department
Bldg. 742-A
Aiken, SC 29808

RE: High Level Waste 242-16H Evaporator Demonstration Project
Savannah River Site

Dear Mr. Laska:

This Office has reviewed your October 27, 2000 request to deploy a full-scale demonstration project for cleaning the 242-16H Evaporator. The proposed demonstration process and operating plan are approved as stated in the *"242-16H Evaporator Chemical Cleaning Operating Plan,"* which was submitted as an attachment to the October 27 letter. The approval for the demonstration is valid for one year from the date of system construction. The Department acknowledges that the plan may require modifications as technical challenges are addressed during the demonstration. Any significant changes in the process or operating plan should be detailed in a letter and submitted to the Department for review. Should you have any questions, please contact me at (803) 898-4238.

Sincerely,

Adrienne F. Wright

Adrienne F. Wright
Environmental Engineer Associate
Industrial, Agricultural and Storm Water Permitting Division
Bureau of Water

cc: Chuck Gorman, FFA Section, BLWM/SCDHEC
Myra Reece, Lower Savannah EQC District
Shelley Sherritt, BLWM/SCDHEC

SRS
savannah river site
TM

WESTINGHOUSE SAVANNAH RIVER COMPANY
INTEROFFICE MEMORANDUM

November 13, 2000 ESH-ESS-2000-00363

TO: S. L. STINSON, 703-H

FROM: G H LASKA, 742-A

HIGH LEVEL WASTE 242-16H EVAPORATOR DEMONSTRATION PROJECT

Per the attached letter from the South Carolina Department of Health and Environmental Control (SCDHEC), concurrence has been received for the 242-2H Evaporator Demonstration Project.

This approval is valid for a period of one (1) year commencing with construction of the external neutralization tank. Any significant changes to the demonstration project (i.e., system configuration changes, chemical changes or wastewater disposition changes) will require SCDHEC review and concurrence.

If you have any questions or need additional information, please contact me at 5-8838.

GHL/dkc
Att.

c: A. B. Gould, 703-A
J. D. Arnett, 703-A

bc:

D. T. Bignell, 742-A
J. N. Dewes, 703-H
D. E. Gordon, 742-A
A. R. Gough, 730-B
G. S. Hoover, 703-A
B. L. Lewis, 703-H
T. J. Lex, 703-H
T. M. Monahan, 703-H
W. L. Payne, 742-A
P. K. Smith, 703-H
EPD Files, 742-A
Records Processing, 773-52A

FILE INFO:
SCDHEC, High Level Waste;
10067;
DOE 14-1.c(1);
Until dismantlement or disposal of review at
10 year intervals

D H E C
PROMOTE PROTECT PROSPER
2600 Bull Street
Columbia, SC 29201-1708

NOV 9

November 6, 2000

Mr. Gene Laska
Westinghouse Savannah River Company
Environmental Protection Department
Bldg. 742-A
Aiken, SC 29808

RE: Transfer of High Level Waste Tank 22 contents to Tanks 5 and 6
Construction Permit #17,424-IW
Savannah River Site

Dear Mr. Laska:

This Office has reviewed your October 27, 2000 request to transfer approximately 900,000 gallons of dilute Defense Waste Processing Facility (DWPF) recycle wastewater from High Level Waste (HLW) Tank 22 to HLW Tanks 5 and 6 in the F-Area Tank Farm. As stated in your request, special condition number eleven in construction permit number 17,424-IW allows the use of Tanks 2 through 8 for receipt of waste when there is no suitable volume available in an approved Type III Tank.

Please accept this letter as approval to conduct waste transfer from HLW tank 22 to HLW tanks 5 and 6 as outlined in your October 27, 2000 letter. This approval is contingent upon completing the proposed transfer with no adverse effects to the current closure plan schedule for any of the tanks involved. This is in accordance with the site's Federal Facility Agreement. Should you have any questions, please contact me at (803) 898-4238.

Sincerely,

Adrienne F. Wright

Adrienne F. Wright
Environmental Engineer Associate
Industrial, Agricultural and Storm Water Permitting Division
Bureau of Water

cc: Chuck Gorman, FFA Section, BLWM/SCDHEC
Myra Reece, Lower Savannah EQC District
Shelley Sherritt, BLWM/SCDHEC

SRS
savannah river site
TM

WESTINGHOUSE SAVANNAH RIVER COMPANY
INTEROFFICE MEMORANDUM

November 7, 2000

ESH-ESS-2000-00357

TO: S. L. STINSON, 703-H

glaska

FROM: G. H. LASKA, 742-A

TRANSFER OF HIGH LEVEL WASTE TANK 22 CONTENTS TO TANKS 5 AND 6

Per the attached letter from the South Carolina Department of Health and Environmental Control (SCDHEC), concurrence has been received for the utilization of Tanks 5 and 6 for transfer of the Defense Waste Processing Facility (DWPF) recycle wastewater.

Please note that this concurrence is contingent upon completing the transfer with no adverse effects to the current closure plan schedule in accordance with the Federal Facility Agreement.

If you have any questions or need additional information, please contact me at 725-8838.

GHL/dkc
Att.

c: A. B. Gould, 703-A
J. D. Arnett, 703-A

3

bc: D. T. Bignell, 742-A
J. N. Dewes, 703-H
D. E. Gordon, 742-A
A. R. Gough, 730-B
G. S. Hoover, 703-A
B. L. Lewis, 703-H
T. J. Lex, 703-H
T. M. Monahon, 703-H
W. L. Payne, 742-A
P. K. Smith, 703-H
EPD Files, 742-A
Records Processing, 773-52A

FILE INFO:
SCDHEC, High Level Waste;
10067;
DOE 14-1.c(1);
Until dismantlement or disposal of
Review at 10 year intervals.

Westinghouse
Savannah River Company
Aiken, SC 29808

FICT

October 27, 2000

ESH-ESS-2000-00354

Ms. Melissa J. King
Industrial, Agricultural and Stormwater
Permitting Division
South Carolina Department of Health and
Environmental Control
2600 Bull Street
Columbia, South Carolina 29201-1708

Dear Ms. King:

HIGH LEVEL WASTE 242-16H EVAPORATOR DEMONSTRATION PROJECT AT SAVANNAH RIVER SITE

The Savannah River Site (SRS) requests SCDHEC approval to deploy a full-scale demonstration project for cleaning the 242-16H Evaporator.

The enclosed Wastewater Treatment Synopsis includes a description of the problem, the proposed demonstration process and Operating Plan. The Operating Plan describes the engineering requirements for removing aluminosilicate deposits from the 242-16H Evaporator and documents the operational requirements and technical basis. This plan may require modifications as technical challenges are addressed during the demonstration. A flowchart is included which provides the steps of the process.

The initial chemical cleaning process deployment is expected to operate for approximately two (2) months. Additional cleaning cycles may be required after evaluation of cleaning effectiveness. Therefore, SRS requests that State approval be valid for one (1) year for the demonstration, beginning at the startup of system construction. System construction will commence with the installation of the external neutralization tank. The 2H Evaporator Cleaning Schedule is also provided with the Operating Plan.

If you require additional information or need any clarification, please feel free to call me at (803) 725-8838. Thank you for your assistance.

Sincerely,

G. H. Laska
Environmental Support Section
Environmental Protection Department
Westinghouse Savannah River Company LLC

GHL/dkc
Enc.

c: A. B. Gould, 703-A
J. D. Arnett, 703-A

bc: D. T. Bignell, 742-A
J. N. Dewes, 703-H
D. E. Gordon, 742-A
A. R. Gough, 730-B
G. S. Hoover, 703-A
G. H. Laska, 742-A
B. L. Lewis, 703-H
T. J. Lex, 703-H
T. M. Monahon, 703-H
W. L. Payne, 742-A
P. K. Smith, 703-H
S. L. Stinson, 703-H
EPD Fileroom, 742-A
Records Processing, 773-52A

FILE INFO:
SCDHEC, 2H Evaporator
10067;
DOE 14-1.c(1);
Until dismantlement or disposal...review at 10 year intervals.

2H EVAPORATOR CLEANING SYNOPSIS

Problem:

The 242-16H evaporator is shut down due to a buildup of scale. The scale is composed of sodium aluminosilicate scale of the form $Na_8Al_6Si_6O_{24}(NO_3)_3$ and ~ 3 wt% of uranium in the form of sodium diuranate ($Na_2U_2O_7$) at less than 1% U-235 enrichment. There are ~3500 kilograms (340 gallons) of total scale material in the evaporator pot, with ~ 9 kilograms of fissile U-235 (~4 times the minimum critical mass of 2100 gram of U-235 for 3% enrichment). The scale matrix presently binds the uranium at a concentration less that the safe infinite concentration. There is no potential for a criticality. The current process, using existing equipment, cannot be used to dissolve, neutralize, and pump the scale to a waste tank. To re-start the evaporator, the scale must be removed.

Proposed Demonstration Process

Transfer in approximately 2,900 gallons of cleaning solution into the evaporator pot and heat to 90 °C for approximately 32 hours. Transfer the spent cleaning solution with any dissolved scale to a 5,000-gallon external tank. Add approximately 1000 gallons of 50wt% sodium hydroxide (NaOH) to the tank and agitate for 2 to 3 days. After confirming the solution is neutralized, pump the solids containing solution to Tank 42. Repeat this process as needed. (Estimated ~ 12 batches)

Additional Details

The cleaning solution is a 1.5 M nitric acid solution containing primarily depleted uranium (~ 275 grams/L).

The cleaning solution will be obtained from NMS&S and transferred to the 242-16H evaporator via a tanker truck. Low-pressure steam (24 psig) supplied to the warming coil of the evaporator will be used to heat the solution in the tank. After heating for 32 hours, the solution will be cooled to approximately 30°C. Cooling will be accomplished by flowing well water through the tube bundle at about 14 gpm. The cooling water will be discharged into the segregated cooling water basin. The waste solution will be pumped out of the evaporator cell through a double-jacketed line to the neutralization tank. The caustic will be added at a slow rate to minimize heating of the tank. After several days of agitation, the contents will be sampled, adjusted if necessary, and pumped through a double-jacketed line to Tank 42.

HLW-STE-2000-00272, Rev. 2

September 25, 2000

To: B. L. Lewis _____ Review/Concurrence

C. Nickell _____ 10/5/00 Review/Concurrence

T. M. Monahon _____ Review/Concurrence

From: B. Wiersma, 773-A BRW
C. S. Boley, 703-H CSB
R.H.Ross RR

242-16H Evaporator Chemical Cleaning Operating Plan

References

Boley, C. S., Thompson, M. C. and Wilmarth, W. R., "*242-16H EVAPORATOR CLEANING FLOWSHEET", WSRC-TR-2000-00211, DRAFT*

1. General Information

1.1. Goal

The goal of the cleaning flowsheet is to remove most, if not all of material from the evaporator pot so that:

- Sufficient solids material is removed to ensure remaining material is less than a critical mass unit
- The population of nucleation sites is significantly lowered to minimize future growth.

1.1. Purpose

The purpose of this Operating Plan is to develop the "processing window" for the removal of the aluminosilicate deposits from the 242-16H evaporator and to document the operational requirements and technical basis. The intended use of the plan is to provide:

- operational information for procedure development;
- guidance for engineers during the cleaning evolutions; and
- a reference in the event of the necessity of future cleaning operations.

This plan assumes that the standard CSTE procedures and authorization basis are in place to support these operations.

2. Process Description

Figure 1 illustrates the process for the chemical cleaning operation. The nitric acid solution will be added to the evaporator pot through a modification in an existing line. The bounding SAR level for the evaporator is 100 inches with an uncertainty of 7 inches. Therefore, the HI HI alarm is set at 91, the Hi level alarm at 89 and the operating level set at 87 inches. The evaporator pot will be heated with 25 psig steam through warming coils. The waste will be transferred to a new tank through the gravity drain line that runs to Tank 42. A portion of the GDL will be removed and replaced with a new section with a line to and from the new tank. A new pump jumper inside the evaporator cell will be used to move the material to the neutralization tank.

The neutralization tank will sit outside on the asphalt between Tank 42 and the evaporator. The vessel will be contained within a dike and vented to atmosphere through a HEPA filter. The tank contains an agitator, level and specific gravity indication, and temperature indication. 50wt% caustic will be added through an addition port from a tanker truck. A recirculation loop will be available to aid in mixing. Upon completion of the neutralization, the pH will be confirmed to be above 7, and the material pumped through the GDL and into Tank 42.

3. Chemical Cleaning Operations

This section discusses the important features of the acid cleaning operation for the 242-16H evaporator. A general sequence of events for the operation is presented, along with sampling and inspection requirements. Supporting technical information is also presented at the end of this section.

2.1 Introduction

Aluminosilicate deposits inside the 242-16H evaporator pot will be cleaned with a dilute nitric acid cleaning solution. The primary technical issues for this process include: 1)developing the technical baseline, (2) optimizing the conditions (i.e., temperature and solution composition) for deposit dissolution and neutralization, and 3) addressing criticality, flammability, and corrosion concerns for all equipment in and associated with the cleaning process. The general sequence of events is designed to perform the cleaning operation safely and to minimize the risk of material degradation. The general sequence of events is described in the next section.

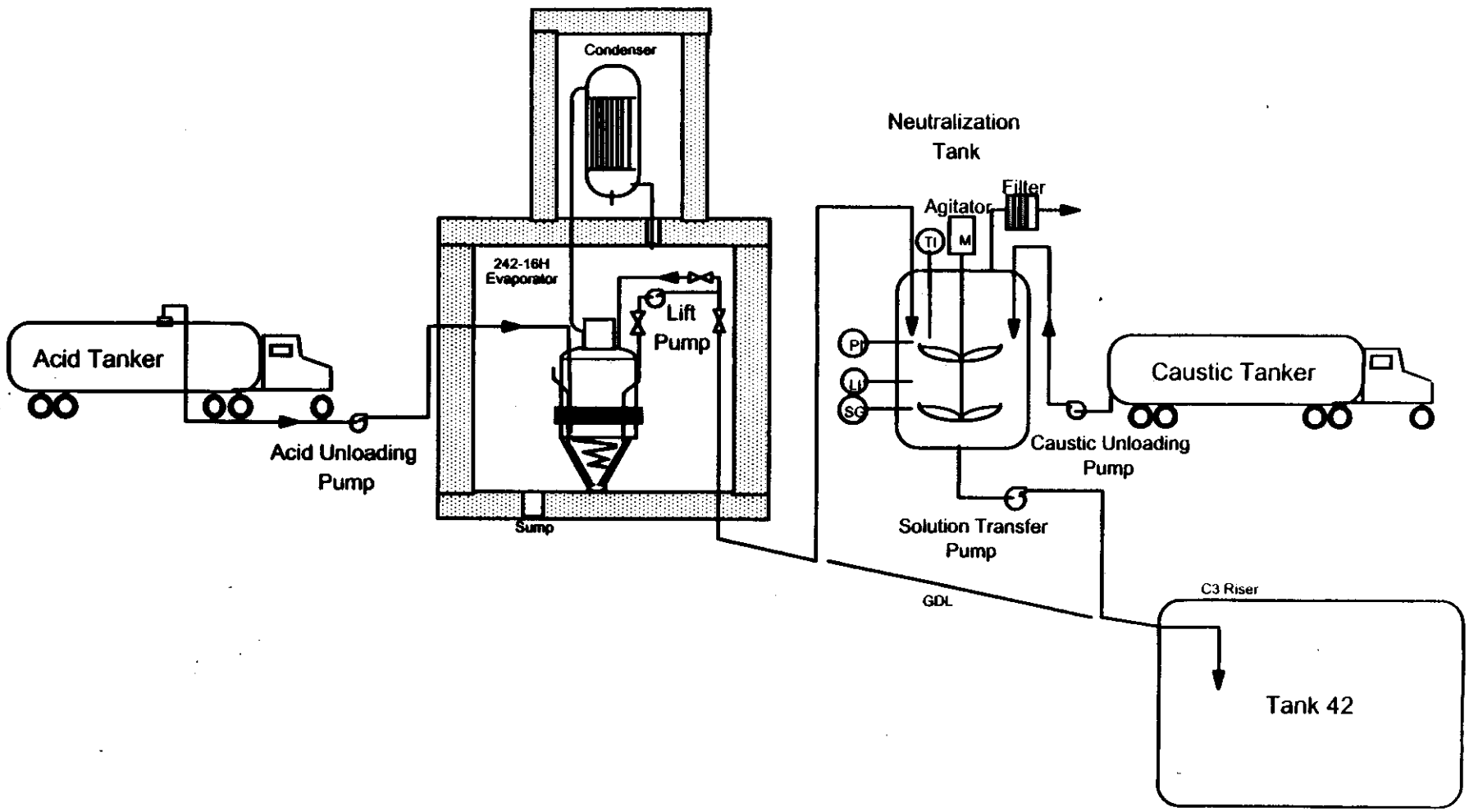
Condenser
242-16H
Evaporator
Lift
Pump
Sump
Acid Tanker
Acid Unloading
Pump
Neutralization
Tank
Filter
Agitator
TI
M
PI
LI
SG
Caustic Tanker
Caustic Unloading
Pump
Solution Transfer
Pump
GDL
C3 Riser
Tank 42

2.2 Batch Operational Sequence

This section presents the operating sequence for a batch operation. The next section discusses optional strategies if cooling coils are available in the neutralization tank. The initial cleaning procedures and training should incorporate the batch operational strategy. The optional strategies will be used if cooling coils are available and/or it is determined that improvement in efficiency is needed.

1. Water Test

a. Add flush water to the pot through the well water addition line or new cold feed addition line to a level of 85-87 inches. This level will be lower if the air lance is used (due to the impact of air on the level of the liquid.)
b. Allow the water to sit in the pot for 12 hours.
c. Test the pump jumper and all additional piping systems (e.g., dummy nozzle) with the water in the pot.
d. Transfer pot contents to neutralization tank through the pump jumper.
e. Test neutralization tank pump and instrumentation with water in the vessel.
f. Transfer the tank contents to Tank 42.
g. Empty the overheads collection tank, if required.
h. Perform visual inspection of the evaporator.
i. Optional: Collect a sample of the solids in the evaporator pot.

2. Acid Solution Make-up Steps

a. A nitric acid/depleted uranium (DU) stream from NMS&S will be utilized for the process. The composition of this stream is ~0.4 M nitric acid and ~333 g/l DU.
b. Add concentrated nitric acid (64 wt%, 14M) to achieve a final concentration of 1.5 M (9 wt%) (+/- 0.25 M) and a DU concentration of 284 g/L (uncertainty to be provided).
c. Collect a sample of the nitric acid/DU solution to verify that it is within the specified range.

3. Nitric Acid Cleaning Steps (Note: See step 11 for sampling of overheads)

a. Add the nitric acid/DU solution through the well water addition line to a level of approximately 83 inches. Upon heating and air agitation, the acid will expand and the acid will affect a higher level in the pot. The acid will be added at a rate of ~ 50 gpm. The bounding acid addition is 3300 gallons. Collect level data during the evolution to quantify the thermal and air agitation impact on the acid volume and adjust the level limits accordingly for future batches.
b. Heat the contents of the pot with the warming coils to 90 °C (temperature range to be determined). During heating, collect temperature data at 4 hour intervals to quantify heating time. Upon completion of heating, additional acid may be added if directed by engineering. Run the air lance or re-circulation line, if available, to mix the contents of the pot and ensure fresh acid reaches the scale surface. Maintain the temperature of the solution for 16 hours (time may be adjusted based on the results of laboratory testing or the results from the samples taken during cleaning). If it is determined that the steam lance is needed, the height in step 3a may be lowered, depending on the evaporation rate. After 16 hours of holding at this temperature, turn

the steam to the coils off and begin cooling the solution with the air lance and cooling water through the tube bundle.

c. Cool the contents of the pot to >35°C with the 25 °C well water via the steam tube bundle. The temperature range will be established by engineering. Collect cool down rate at 4 hour intervals so that engineering may determine the cool down rate for future batches. The air lance may also be used as supplemental cooling as necessary. The maximum time to cool down the hot nitric acid (90 to 30°C) has been estimated at 16 hours without the use of the air lance.

d. **Optional:** (may be done in Step 4) Collect multiple liquid sample of the solution in the pot through the cell cover port and sample adapter while the cool down process is occurring. Send a sample to SRTC to determine dissolution rates of the scale into solution and the other sample to F-lab to perform a titration. Additional samples will be collected during the first batch to monitor the reaction kinetics.

e. Transfer the solution to the neutralization tank.

4. Caustic Neutralization Steps (Note: See step 11 for sampling of overheads)

a. **Optional:** (may be done in Step 3) Collect multiple liquid sample of the solution in the neutralization tank. Send a sample to SRTC to determine dissolution rates of the scale into solution and the other sample to F-lab to perform a titration.

b. With agitator running, add 50 wt% sodium hydroxide to the neutralization tank to target a final solution pH of 10-14. The bounding amount of caustic to be added is 1300 gallons. Continue agitating the solution after the caustic addition for an additional time to be specified by engineering. The caustic quantity and addition rate will be specified by engineering to control the temperature in the tank. Collect temperature, tank level, and caustic addition rates as specified by engineering.

c. Determine the pH of the solution. Keep agitator running. Alternatively, if trending of previous batches indicates that the amount of caustic necessary for neutralization can be predicted reliably, the batch may be sent to Tank 42 without sampling. A minimum of 5 batches will be required to establish a trend. If no trend is established, the pH will continue to be monitored at this stage.

d. If pH is less than 7, with the agitator running, add caustic to the solution in the pot. Continue agitating the solution for additional specified time.

e. Repeat steps c and d as necessary.

5. Transfer the neutralization contents to Tank 42. (Note: Tank 42 will be equipped with a downcomer that injects the pot contents below the surface of the waste.)

6. Repeat steps 2 to 5, 4 times (for a total of 5 acid rinses).

7. Post-cleaning Inspection

a. Visually inspect the evaporator pot to determine if more acid rinses are required. It is anticipated that a minimum of 6-8 batches will be required. See the attached spreadsheet. Note that in the spreadsheet the nominal amount of acid (at 85 inches) is used as opposed to the maximum acid at 100 inches discussed above.)

b. Repeat steps 2 to 6 as necessary

8. Mechanical Cleaning Operations for Lift and GDL

a. Visually inspect the west lift through the catheter cleaning jumper.
b. Mechanically clean the west lift jumper (if required) and the GDL.
c. Transfer the loosened scale to Tank 42 via the east lift (pump).
d. Visually inspect the pot, lift, and GDL. Repeat steps b-d if required. If the pump is unable to remove large chucks of scale, acid cleaning of the pot may be necessary.

9. Final Inspection and Sampling

a. Visually inspect the vessel for the purpose of determining the residual amount of scale in the pot.
b. If applicable, obtain a sample of any loose material in the cone and a scrape sample of the side wall.
c. Perform an engineering evaluation to declare whether or not the pot is clean.

10. Pot Return to Service

a. Reinstall separator jumper.
b. Clean separator jumper.
c. Inspect separator jumper and GDL.
d. Rinse pot with 1 molar caustic.
e. Inspect pot and determine impact on the conclusions of the inspection in step 9 of any material added to the pot from the separator pot cleaning.

11. Sampling of Overheads Collection Tank Steps

a. Collect a liquid sample from the overhead collection tank. Determine pH of the solution with litmus paper. Determine NO_3^- concentration and gamma reading of sample.
b. Transfer contents of the overhead collection tank to ETF.

2.3 Bases for Steps in the Batch Operational Sequence

1. The water addition benefits the process for many reasons. First, any soluble salts will be removed from the well water line and the internals of the evaporator. Dissolving these salts and removing them from the pot will minimize NO_X generation while the nitric acid solution is being added to the evaporator. Twelve hours at ambient temperature is ample time for dissolution of the soluble salts.

Second, the water addition serves as a test for the new components in the process. The pump jumper, transfer route to the neutralization tank and to Tank 42, dummy nozzle and cold feed addition line can all be tested with water (much safer than putting acid straight to new components). Also, the evaporator will be filled to the high level (~86 inches true level) for the first time with a benevolent solution, which will test the level instrumentation. Note that addition of this small amount (less than 3000 gallons) of neutral to slightly caustic water will not adversely affect the very caustic waste present in Tank 42 (hydroxide concentration is greater than 4 M). At the worst, the solution will not dissolve any salts and will serve as flush water. This volume of uninhibited water to a

tank with this hydroxide concentration is acceptable. Injection of this solution below the surface of the waste through the downcomer further reduces the risk

Emptying the overhead collection tank prior to proceeding with the acid cleaning will allow one to send that material to ETF, and then monitor whether a significant amount of acidic solution was generated in the overhead system.

2. The acid feed to the evaporator will be obtained from the NMS&S canyon cold feeds area. The NMS&S canyon facilities have an inventory of nitric acid/depleted uranium (DU) solution in tankers that are considered process waste. The nitric acid/DU solution will serve for both cleaning and criticality control. The DU in the nitric acid will lower the enrichment of the uranium present in the aluminosilicate deposits. Concentrated nitric acid (64 wt%, 14 M) will be added to the solution to arrive at the desired concentration of 1.5 M (9 wt%) HNO_3. This concentration has been proven effective for dissolution of aluminosilicate deposits in the laboratory. Although dissolution studies with a 3 M nitric acid solution were initiated, insufficient data exists as to the effectiveness of the solution. A "white-label" sample shall be taken of the solution to ensure that it is within the specified composition range.

3. All of the aluminosilicate deposits are below the 89-inch level. The uncertainty in the level instrumentation is 7 inches. The AB calculations use a level of 100 inches, so the TSR limit was set at 93 to account for the uncertainty. The Hi Hi alarm level has been set at 91 inches and the Hi alarm set at 89 inches and the operating level will be set at 87 inches. Thermal expansion and bubbler expansion of the liquid require ~ 4 inches; there fore acid addition to 83 inches will ensure that the operating level is not exceeded. These limits may be altered using experience gained during chemical cleaning. Only 2 inches of scale will not come in contact with acid solution. The acid addition should be completed as quickly as possible to speed the process and mixed during the addition.

Heating the solution will increase the dissolution rate of the deposits. Laboratory testing suggests that at a temperature of 90 °C, the 1.5 M (9 wt%) solution will effectively dissolve the exposed aluminosilicate deposits as well as the entrapped uranium. After a certain residence time, the nitric/DU solution will need to be refreshed, so that the surface of deposits is exposed to fresh solution. A 32-hour residence time has been established initially. Four samples (at 8 hour intervals) should be pulled during the initial heating to monitor the reaction kinetics in the evaporator pot. The residence time and/or operating strategy may be adjusted based on these results.

The contents of the pot will need to be cooled prior to transferring to the neutralization tank in order keep the final temperature in the tank below 90 degrees. Further laboratory testing is being conducted to determine an optimum cool down temperature range. As the solution is being cooled, two 100 ml liquid sample can be withdrawn and sent to SRTC to determine the Al, Si, and U concentrations in the solution and to F-lab for titration. This sampling can also be performed after transferring the solution to the neutralization tank.

4. Neutralization of the nitric acid/DU solution must be performed prior to transferring the solution to Tank 42. The tank wall and the cooling coils were constructed of carbon steel, which will corrode very rapidly in an acidic environment. A separate tank with an agitator will be used to perform this step due to the high solids precipitation. The amount of sodium hydroxide that will be added to the tank will be based on the results of the titration performed in step 3. The target for the final solution pH is 10 to 14. The caustic addition rate and agitator requirements will be specified by SRTC and engineering. The agitator should be run at all times during this step and for a period of time after introduction of the caustic.

5. Tank 42 offers the following advantages for final disposition of the cleaning solution.
   - The hydroxide concentration in Tank 42 waste is approximately 4 times greater than that in Tank 38. Tank 42 also has slurry pumps. These attributes would provide added insurance to protect against tank corrosion under the following potential scenarios:
     - An inadvertent transfer or siphon of acidic waste into the receipt tank
     - Inadequate mixing of caustic with acidic waste in the neutralization tank.

   - Transferring the cleaning solution to this tank purges the evaporator system (Tank 43 and associated drop tanks)of sodium aluminosilicate and sodium diuranate. If periodic cleaning of the 2H is necessary, this provides the only known purge point from the evaporator system. Personnel familiar with the High Level Waste system plan cited Tank 42 as an ideal purge tank for the cleaning solution.

Modifications will need to be made to the riser in Tank 42. A downcomer that ensures that the cleaning solution will be injected beneath the surface of the waste will need to be placed in the riser. Note: This modification is complete. Furthermore, injecting the waste near a slurry pump that is operating will further reduce the risk to the tank walls and cooling coils.

6. and 7. Calculations suggest that at least 6 –8 batches of the acid solution may be necessary to dissolve the solids. These calculations assume that the solution comes to equilibrium (i.e. all free acid is used up in the dissolution process) during each batch. Because the dissolution process is very sensitive to the exposed surface area of the deposits, how well dissolution rates and efficiencies determined in the laboratory will compare with those actually obtained in the field is unknown. Following the fifth dissolution sequence, a visual inspection of the pot will be performed. The results of this visual inspection combined with the results from the sample analysis performed by SRTC will assist engineering in determining if more acid rinses are required. The visual inspection should determine the level and physical characteristics (e.g., fine particles or hard crystalline deposits) of the remaining solids. Based on the inspection results, engineering will determine the need for mechanical cleaning using spray nozzles for removal of isolated scale buildup locations.

8. After the deposits are cleaned from the pot, the west lift and gravity drain line will be inspected to determine if mechanical cleaning is needed. A catheter jumper will be installed to clean the west lift and GDL, and mechanical cleaning will be performed with the pressure washer apparatus used previously in 1997.
9. After cleaning, the lines and pot will again be inspected to ensure that they are free of solids. The remaining liquid and solids from the pot will be transferred to the neutralization tank and then to Tank 42. A pot inspection will verify if solids remain in the pot and engineering will evaluate the need for additional acid rinses.

10. The separator jumper will then be reinstalled and cleaned, and a concluding rinse with 1 molar caustic will ensure that the west lift and GDL are free of any low pH solution.

11. There is a potential for NO_x vapors to be condensed in the overheads. As a result, a nitric acid solution may collect in the overheads tank. Since the vessels, the piping, and their components were made from 304L stainless steel, there is no concern of corrosion to the evaporator overhead system. However, due to the potentially high gamma activity of the solution, the condensate must be sampled before it can be sent to ETF. The pH of the stream can be low, but the gamma and NO_3^- content must be within ETF limits. A sample of the liquid must be collected and analyzed for pH, NO_3^-, and gamma. If the waste cannot be accepted in ETF, the solution must be neutralized with a caustic addition and sent to Tank 43.

2.4 Optional Operational Strategies

There are several options for running the cleaning process if adequate cooling is available and installed in the neutralization tank. These include:

- Running in a "Semi-Batch Mode." After the initial heating, small batches (~1000 gallons) would be transferred to the neutralization tank, cooled, neutralized, and sent to Tank 42. An additional 1000 gallons of acid would be added to the evaporator pot just after the transfer to the neutralization tank. This would remove the heating time (~29 hours) and the cooling time (~16 hours) from the overall batch time (since the pot will not have to be cooled and reheated every batch and the cooling and heating will be in series) and *significantly* shorten the total cleaning time (especially if more than 5 batches are required.) Longer acid residence times in the evaporator would also result.
- Moving the cooling stage of the process to the neutralization tank. This will shorten the batch cycle time by 16 hours, and may shorten it further since the evaporator will not be cooled down between each cycle.

Engineering is evaluating the use of cooling coils. Pros and cons for cooling are listed below:

Pros:	Cons:
Large savings in overall cleaning time (estimated at a 3 week savings if 20 batches	Schedule impact due to additional field activities to provide cooling.

are required)	
Additional temperature control (other than caustic addition rate) which could speed caustic addition rate and overall neutralization process.	Most current tanks have warming coils as opposed to cooling coils so the cooling in these tanks would be minimal, however adequate mixing may alleviate this concern. Procuring a new tank would be a "schedule bust."
Cooling available in case of rapid heat generation due to process upset (caustic addition faster than expected, loss of agitation.)	Complexity of field operations increases with semi-batch mode.
	Cooling coils may impede mixing.

Final Flowsheet Calculations

Tanker Solution

g/L Total U	284		
Total Acid Volume	2905	gallons	1.25 M
Total Uranium Added	3123	kgs	
Height of Acid Solution	85	inches	85.0 inches
Density	1.418		

Already in Pot

			13744.2813
Total Scale Solids	372212	grams	5645
Sodium Alumino Silicate	338504	grams	
U235	953	grams	
U238	32755	grams	

Estimated Amount of Dissolved Material

179	Moles U		
2308	Moles Na		
3158	Moles Al		
1731	Moles Si		
3.9	**U g/L**	7.1	Batches required
483742	Total Solids , grams		
483.74			

Final Bulk Concentrations

3147961	**Total grams of U238 in pot**
8448	**Total grams of U235 in pot**
0.27%	**Bulk Enrichment of Pot**
287.8	**g/L U238**
0.8	**g/L U-235**
288.6	**g/L Total U**

Water Addition During Operation

0.0	**Lance Water**
200.0	**Flush Volume**
100.0	**seal pot flush**
0.0	hours of steam lance operation

Acid Concentrations Expected After Water Aditions

3205	Final Volume
262	**g/L Total U**
0.72	**g/L U-235**
3.5	**g/l Scale Uranium**
42.6	**kgs U dissolved**

Caustic Addition

Moles Nitrate	13744
Moles U total	13329
Moles U Scale	179
Moles Al	179
Moles Si	1731
Total Moles caustic needed	60478

1119	gallons	19.11	M
80919	Moles Caustic added	(299,364.25)	Heat of reaction, kcal
		23.7	**delta T**
192	gallons of water created with neutralization		
1.2630	Final Free OH M		
60.0	Freeboard Volume		

Final spg in pot	1.40	
Total Liquid Volume		
Vapor Volume	976	
TLFL	51	days in new tank with 5000 gallons

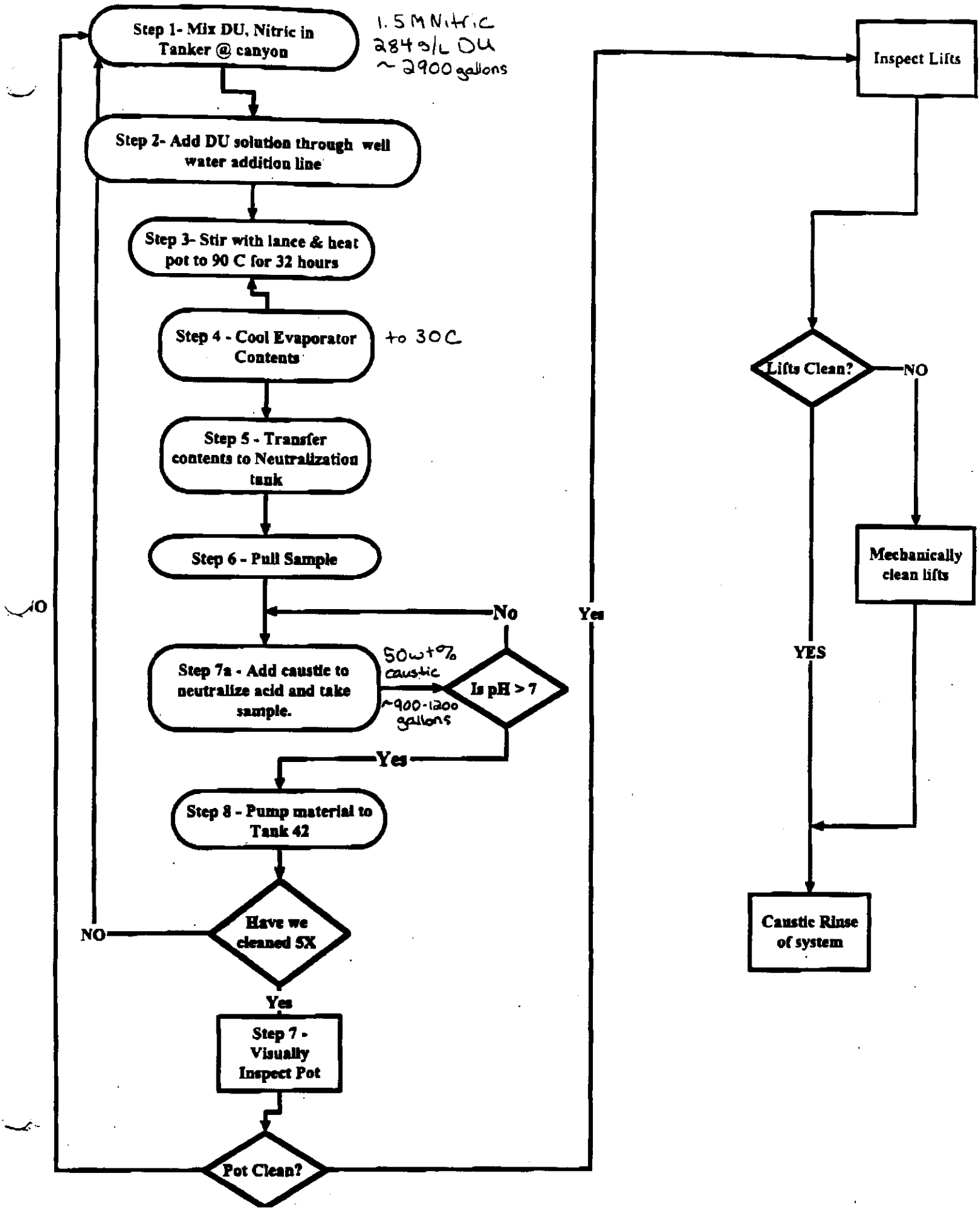
Step 1- Mix DU, Nitric in Tanker @ canyon
1.5M Nitric
284 g/L DU
~2900 gallons
Step 2- Add DU solution through well water addition line
Step 3- Stir with lance & heat pot to 90 C for 32 hours
Step 4 - Cool Evaporator Contents
to 30C
Step 5 - Transfer contents to Neutralization tank
Step 6 - Pull Sample
Step 7a - Add caustic to neutralize acid and take sample.
50wt% caustic
~900-1200 gallons
Is pH > 7
No
Yes
Step 8 - Pump material to Tank 42
Have we cleaned 5X
NO
Yes
Step 7 - Visually Inspect Pot
Pot Clean?
Yes
Inspect Lifts
Lifts Clean?
NO
YES
Mechanically clean lifts
Caustic Rinse of system

Last

2H EVAPORATOR CLEANING SCHEDULE

Milestones

11/20/00	Designs for Cleaning Complete
12/11/00	Submit Authorization Basis to DOE – Chemical Cleaning
12/19/00	Construction for Cleaning Complete
12/21/00	Authorization Basis for Cleaning – Implementation Complete
1/5/01	Management Decision to Commence Cleaning
3/12/01	2H Mechanical Cleaning Complete

Westinghouse
Savannah River Company
Aiken, SC 29808

October 27, 2000

ESH-ESS-2000-00353

Ms. Melissa J. King
Industrial, Agricultural and
Stormwater Permitting Division
South Carolina Department of Health
And Environmental Control
2600 Bull Street
Columbia, South Carolina 29201-1708

Dear Ms. King:

TRANSFER OF HIGH LEVEL WASTE TANK 22 CONTENTS TO TANKS 5 AND 6 AT THE SAVANNAH RIVER SITE

Ref: Construction Permit #17, 424-IW

The Savannah River Site (SRS) intends to transfer approximately 900,000 gallons of dilute Defense Waste Processing Facility (DWPF) recycle wastewater (activity <: 1 Ci per gallon) from High Level Waste (HLW) Tank 22 to HLW Tanks 5 and 6 in the F-Area Tank Farm. (Additional technical details of the transfer can be found in Attachment 1). Special Condition #11 of the referenced permit allows use of Tanks 2-8 for receipt of waste when there is no suitable volume available in an approved Type III Tank. This matter was discussed with Melinda Vickers per telephone conversation on October 24, 2000.

DWPF recycle currently consumes approximately 140,000 gallons of Type IV storage space each month. The 2H Evaporator, which processes this waste stream, is shut down due to accumulation of solids on the interior evaporator surfaces and is not expected to return to service until mid 2001 when scale removal is complete. Other Type III tanks cannot be used to accept DWPF recycle because they are either filled to capacity, utilized for mission essential storage or set aside for safety reserve capacity.

At the present storage configuration, recycle storage space will be consumed in three months and result in shutdown of canister production at DWPF. Completion of the proposed transfer will generate six months of additional space for DWPF recycle storage, allowing continued operation of DWPF until the 2H Evaporator is cleaned and returned to service and will result in no adverse effects to the current closure plan schedule for any of the tanks involved, in accordance with the site's Federal Facility Agreement, Administrative Docket Number 89-05-FF.

Per our previous discussions, your written concurrence with the proposed waste transfer from Tank 22 to HLW Tanks 5 and 6 is hereby requested.

If there are any questions, please contact me at (803-725-8838)

Sincerely,

G. H. Laska
Environmental Support Section
Environmental Protection Department
Westinghouse Savannah River Company LLC

GHL/dkc
Enc.

c: A. B. Gould, 703-A
J. D. Arnett, 703-A

bc: D. T. Bignell, 742-A
J. N. Dewes, 703-H
D. E. Gordon, 742-A
A. R. Gough, 730-B
G. S. Hoover, 703-A
G. H. Laska, 742-A
B. L. Lewis, 703-H
T. J. Lex, 703-H
T. M. Monahon, 703-H
W.L. Payne, 742-A
P. K. Smith, 703-H
S. L. Stinson, 703-H
EPD Files, 742-A
Records Processing, 773-52A

FILE INFO:
SCDHEC, High Level Waste
10067;
DOE 14-1.c(1);
Until dismantlement or disposal...review at 10 year intervals.

Enclosure 1

TRANSFER DETAILS

Receiving Tanks: Tanks 5 and 6
- Type I tanks
- 750,000-gallon maximum capacity at 278" fill height
- 60" tall annulus pan with full leak detection
- No leakage history
- Current Tank 5 level 12"
- Current Tank 6 level 133"
- Emergency transfer capability out of Tanks 5 and 6

Sending Tank: Tank 22
- Type IV tank
- Single wall, no annulus
- No leakage history

Transfer Line
- Underground
- Stainless steel core pipe
- Fully jacketed with carbon steel
- Fully operable leak detection in jacket

Waste to be Transferred
- DWPF recycle stored in Tank 2
- Very dilute
- << I Ci/gallon
- Estimate ~ 290,000 gallon to Tank 6 during 12/00
- Estimate ~ 600,000 gallons to Tank 5 during 2/01

Stuart Stinson

To: Gene Laska/WSRC/Srs
cc:
Subject: Comments on 2H Evaporator Letter

10/25/00 04:28 PM

Gene,

I think the following comments will resolve the major concerns voiced to me so far regarding the demonstration project at the 2H Evaporator.

1. Eliminate the actual schedule page from the package.

2. Delete the statement "(See attached schedule fro additional items.)" from the cleaning schedule I provided you. This has already been done. See attachment.

3. Add the flow chart to the package. I will FAX a copy of it to you. If you think you need a cleaner copy, I will hand deliver you one tomorrow. It will be there when you read this.

4. Request the demonstration be valid for a period of 1 year. If this is too long of a period, a minimum of 9 months please.

5. Define "Startup of system construction" as the beginning of installation of the external tank.

6. Add a statement to the effect that the plan is a living document and will be revised as new technical issues arise and are solved.

Give me a call if you have any questions. Well, just give me a call tomorrow in the AM. I also informed them that it will take at least two weeks to get the response back from SCDHEC. I was pleasantly surprised at their reaction. It doesn't appear to be a huge problem.

Again, thanks for all the help. I appreciate it.

- 2hevap~3.doc

Letter pilot test 2
- time to run it
- Byron Anick - 2-3 weeks
telecon 9/5/00

September 5, 2000

To: Gene Laska

From: Stuart Stinson 8-1537 / 18845

Subject: 2H Evaporator Demonstration Project for Neutralization of Pot Cleaning Solution

HLW is evaluating several options for neutralizing the nitric acid and depleted uranium solution utilized in the 2H Evaporator pot cleaning. The preferred option, which provides the best agitation of the cleaning solution and caustic acid mixture, will require the use of a 2000-5000 gallon external tank. The proposed tank is not currently part of the facility and must be designed and installed prior to cleaning. Details of the tank and associated systems cannot be provided at this time. The proposed activity is still in the conceptual stage. The disposition of the tank and system is not known at this time. It is anticipated that the components will be disposed of as low level waste if disposal is required. HLW views this proposed activity as a demonstration.

One of the primary factors in the decision process will be the time factor for permitting. Cleaning of the evaporator pot is required before operation of the evaporator can commence. Operation of the 2H evaporator will have direct consequences in the future operations of DWPF and HTF. As I discussed with you on Friday, time is of the essence and we would like to have a "feel" from SCDHEC before Wednesday morning.

Attached is a brief description of the proposed activity.

Thanks in advance for your help.

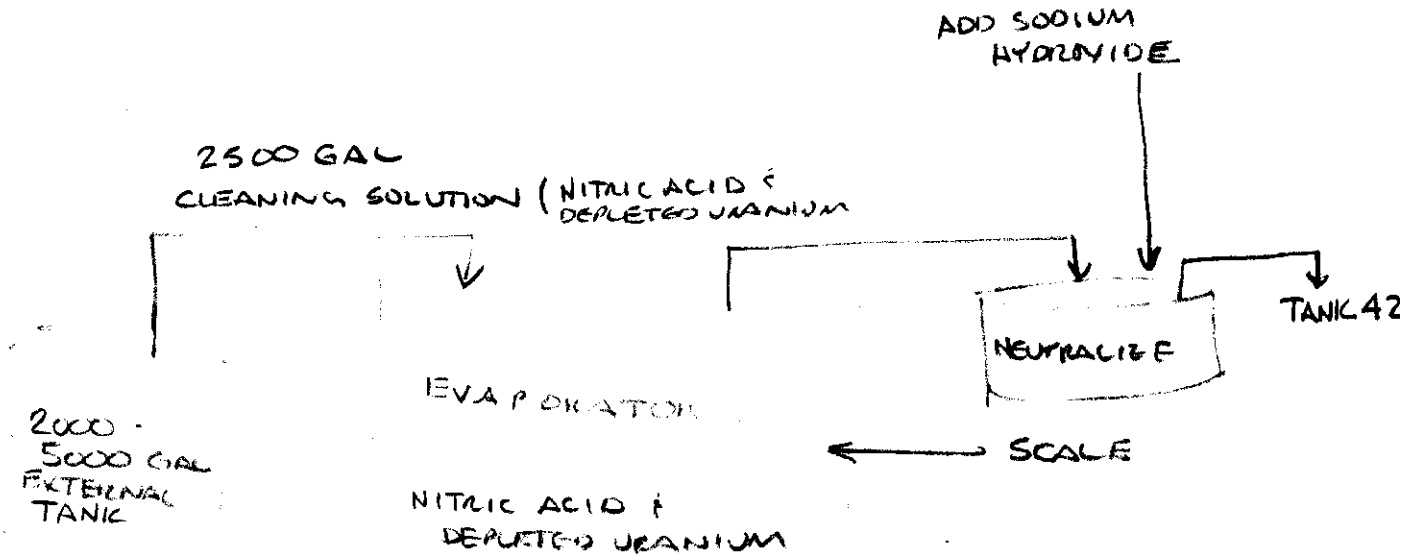

3

Problem

The 242-16H evaporator is shutdown due to a buildup of scale. The scale is composed of sodium aluminosilicate scale and sodium diuranate ($Na_2U_2O_7$). There are ≈3500 kilograms (340 gallons) of total scale material in the evaporator pot. The scale matrix presently binds the uranium at a concentration less than the safe infinite concentration. There is no potential for a criticality. The current process, using existing equipment, cannot be used to dissolve, neutralize, and pump the scale to a waste tank. To re-start the evaporator, the scale must be removed.

Proposed Demonstration Process

Transfer in approximately 2,500 gallons of cleaning solution (1.5M nitric acid with depleted Uranium solution) into the evaporator pot and heat to 90°C for approximately 20 hours. Transfer the spent cleaning solution with any dissolved scale out of the evaporator to a separate 2,000 to 5,000 gallon (approximately) tank. Add approximately 500 gallons of 50wt% sodium hydroxide (NaOH) to the tank and agitate for 2 to 3 days. After confirming the solution is neutralized, pump the neutralized solution to Tank 42.

Additional Details

The cleaning solution will be obtained from the H-Canyon facility and transferred to the 242-16H evaporator via a tanker truck. Low pressure steam (25 psig) supplied to the warming coil of the evaporator will be used to heat the solution in the tank. After heating for 20 hours, the solution will be cooled to approximately 30°C. Cooling will be accomplished by flowing well water through the tube bundle at about 14 gpm. The waste solution will be pumped out of the evaporator cell through an above ground double-jacketed line to the neutralization tank. The caustic will be added at a slow rate to minimize heating of the tank. After several days of agitation, the contents will be sampled, adjusted if necessary, and pumped through an above ground double-jacketed line to Tank 42.

9-5-00

To: Gene Laska

FAX # 5-4676

FROM: Stu Stinson

3 pages

Author: Monte Hawkins at SRCCA14
Date: 9/27/00 12:38 PM
Normal
TO: Thomas Monahon at SRCCH20, Fran Williams at SRS, Dale Bignell at SRS
CC: Joseph Odum at SRCCA01, Sterling Robertson at SRS, Donald03 Johnson at SRCCH29, Mike Mobley at SRCCH10, Perjetta Smith at SRCCC04, Thomas Lex at SRCCA05, Brent Rankin at SRCCB10, Charles Nickell at SRS, John Dewes at SRS, Gene Laska at SRCCH18
TO: Alfred Johnson at SRCCH19
Subject: 2H Evap cleaning solutions
---------- Message Contents

Tom, the following is in response to your 9/26 cc mail with follow-up questions from the meeting on 9/25. Let me or Joe know if you have additional questions.

Permitting the Canyons

Because your questions deal with obtaining permits for the canyons, it is important to understand the current regulatory status of those NMS&S facilities.

The canyons and associated outside facilities currently operate without any type of permit. Clearly, certain portions of the canyon process such as the Acid Recovery Units and General Purpose Evaporators could be viewed as waste management activities.

In the late eighties, because of the mixed waste by-product rule, EPA and DHEC spent considerable time reviewing waste management activities at SRS to define the extent to which RCRA permits would be required. The question of regulating the GP evaporators, ARUs and other portions of the canyon was discussed at length with the Environmental Protection Agency (EPA) and DHEC. EPA and DHEC ultimately agreed that operations within the F & H Canyon envelopes would not be classified as waste processing and would, therefore, not require environmental permits.

The decision not to require a permit for the canyon facilities was largely a matter of regulatory discretion on the part of EPA and DHEC. That is not to imply that this determination is incorrect, but rather that it is somewhat "fragile". A less favorable interpretation might result if the situation was reexamined by EPA and SCDHEC today. This decision was largely undocumented and most of the decision makers no longer work for EPA and DHEC. It must be recognized that the current arrangement is a very favorable one for SRS and NMSS in particular.

A decision to approach DHEC regarding the treatment of the evaporator cleaning solutions would reopen the question of permitting portions of the canyons. We beleive that it is unlikely that any permitting renegotiations would result in as favorable a situation as the current one. Therefore, ESH&QA advises against this approach.

It is possible that the canyons could meet the requirments for a wastewater treatment permit. However, DHEC has indicated that they are ulikely to permit additional mixed waste treatment, storage, or disposal facilities (such as the tank farms, saltstone and DWPF) under

the RCRA wastewater exclusion. Furthermore, any permit could have a significant impact on the production mission of the canyons. That is, where does waste treatment end and production begin?

Question 1. Is the only way to do this with a RCRA permit?

No. As we explained in the meeting, there are two exclusions from RCRA that could potentially be applied to the management of the 2H evaporator cleaning solutions by NMS&S.

1. Return the cleaning solutions to NMS&S for the recovery of a product. NMS&S determined that this is not a viable option.

2. Return the cleaning solutions to NMS&S for use as an effective substitute for a commercial chemical product or as a substitute feedstock. NMS&S has not ruled out this option. This option is regulatory viable provided NMS&S can credibly use the cleaning solutions for this purpose. The technical feasibility is their responsibility.

In addition, NMS&S could elect to apply for a wastewater treatment permit for the canyons and associated facilities. Some of the issues associated with this option are discussed above. This would also likely impact the NMSS missions and milestones in the future. It is not conceivable that a facility can move back and forth or in and out of permitted waste treatment (either WW or RCRA) without significant permitting constraints on normal production. We are not aware of any permitted facilities that operate in this way.

Question 2. Can we not just go ask DHEC to let us do this since this is a simple cost effective way using our existing equipment? Why not?

Yes, WSRC could elect to ask DHEC.

When asking such questions we feel we are obligated to identify some provision within the regulations that provides DHEC with a regulatory basis for approving our request. We are not aware of any such provisions other than the two identified above. We believe DHEC is unlikely to take such a position without such a basis in the regulations (to do so, puts them in the situation of creating law rather than following it - well beyond a regulator's scope and authority).

Secondly, as explained above, any inquires to DHEC regarding the utilization of the canyon and associated facilites for waste treatment could call into question the regulatory status of the canyons.

Question 3. How long would it take to get a RCRA permit?

For the canyons, five or more years. The cost would probably exceed a million dollars.

Question 4. If a RCRA permit could be obtained, is there some reason that the site does not want to ask for it?

We do not believe the canyons are RCRA "permittable" largely because of secondary containment requirements and current siting standards. SRS could always decide to set those concerns aside and apply for a RCRA permit. However, if a RCRA permit application is made and DHEC determines that the facilities cannot meet existing regulatory requirements the canyons could be forced to close.

With any permit it is necessary to define the boundaries of the permitted facilities and activities. In our view, attempting to operate the NMS&S facilities as part-time waste treatment facilities could seriously impact their production mission. However, the decision to approach DHEC regarding a permit for the canyons ultimately lies with NMS&S Management.

The potential use of the cleaning solutions as a substitute feed material is a viable regulatory option. However, because of the potential impacts on the current regulatory status of the canyon facilities, ESH&QA strongly advises against approaching DHEC with any proposal to process this material in NMS&S facilities.

Gene Laska

To: Dale Bignell/WSRC/Srs@Srs
cc: Don Gordon/WSRC/Srs@Srs
Subject: DWPF Recycle Waste

10/12/00 10:33 AM

Dale,

Per telecon with Jeff Newman, Stuart Stinson, Chuck Hayes and myself, the following is known about the DWPF recycle transfer to Type I Tanks:

- DWPF expects to run out of space for their recycle waste on January 8, 2001

- There are issues associated with the path of the recycle waste to transfer it from Tank 21 to Tank 5 that the HLW folks are working on - HLW has identified an issue with the valves in DB-1 (there is also a potential issue with the FFA since the transfer path is an unknown right now)

- HLW environmental would like to have us contact SCDHEC in about 2 weeks (November 1st timeframe)

- HLW engineering is preparing a paper similar to the one in 1997 that describes the Type III tank situation and why we need to access the Type I tanks. We will not contact SCDHEC until we have a clear path forward on this issue.

- We (EPD) intend to make a call first to SCDHEC and explain the situation with waste storage and how we plan to excersize the special condition in the permit. If necessary, we will make a trip to Columbia with HLW SME's to further explain the process and how we intend to deal with the recycle waste.

Please let me know if there is any other information required on this issue.

Gene

get letter ready for DHEC

get FFA Team

concerns on schedule.

discuss sched. impacts

notification of situation and exercising Special Cond.

— approval —

letter

don't have to request to approve.

call: Jeff Newman
Pic Smith
Mark Mahoney

2

TANKS 4, 5, 6 8 (TYPE I)
9000,00 GAL. DWPF RECYCLE H_2O

NORMAL TRANSFER
TANK 21

1. HLW document available space in Type III Tanks.

2. have letter ready

3. Telecon w/ DHEC (Adrienne Wright
Melissa King)

4. DWPF driver (recycle)
run out of space Jan. 8, 2001

Tank 21 ⟶ Tank 5
DB-1
(PROBLEM W/ VALVES.

80343

2 weeks to DHEC
by Nov. 1

FFA impact
transfer path remains
unknown

10-17-00

To: Gene Laska (5-8838) FAX 5-4676

From: Stuart Stinson (8-1537)

3 pages counting cover page

Talking Points for Transfers into Tanks 5 & 6

Receiving Tanks: Tanks 5 & 6
- Type I tanks
- 750,000 gal max capacity at 278" fill height
- plan to fill to max of 233"
- 60" tall annulus pan with full leak detection
- no leakage history
- Tank 5 currently at 12"
- Tank 6 currently at 133"
- Emergency transfer capability out of Tanks 5 & 6

Sending Tank: Tank 22
- Type IV tank
- Single wall, no annulus
- No leakage history

Transfer Line
- Underground
- Stainless steel core pipe
- Fully jacketed with carbon steel
- Fully operable leak detection in jacket

Waste to be Transferred
- DWPF recycle stored in tank 22
- Very dilute
- << 1 Ci/gallon
- estimate ~290,000 gallons to Tank 6 during 12/00
- estimate ~600,000 gallons to tank 5 during 2/01
- dates and volumes subject to change but this is the general idea

Neil Davis, 10/16/00

Type III Tanks by System (27 Total) (10/15/2000)

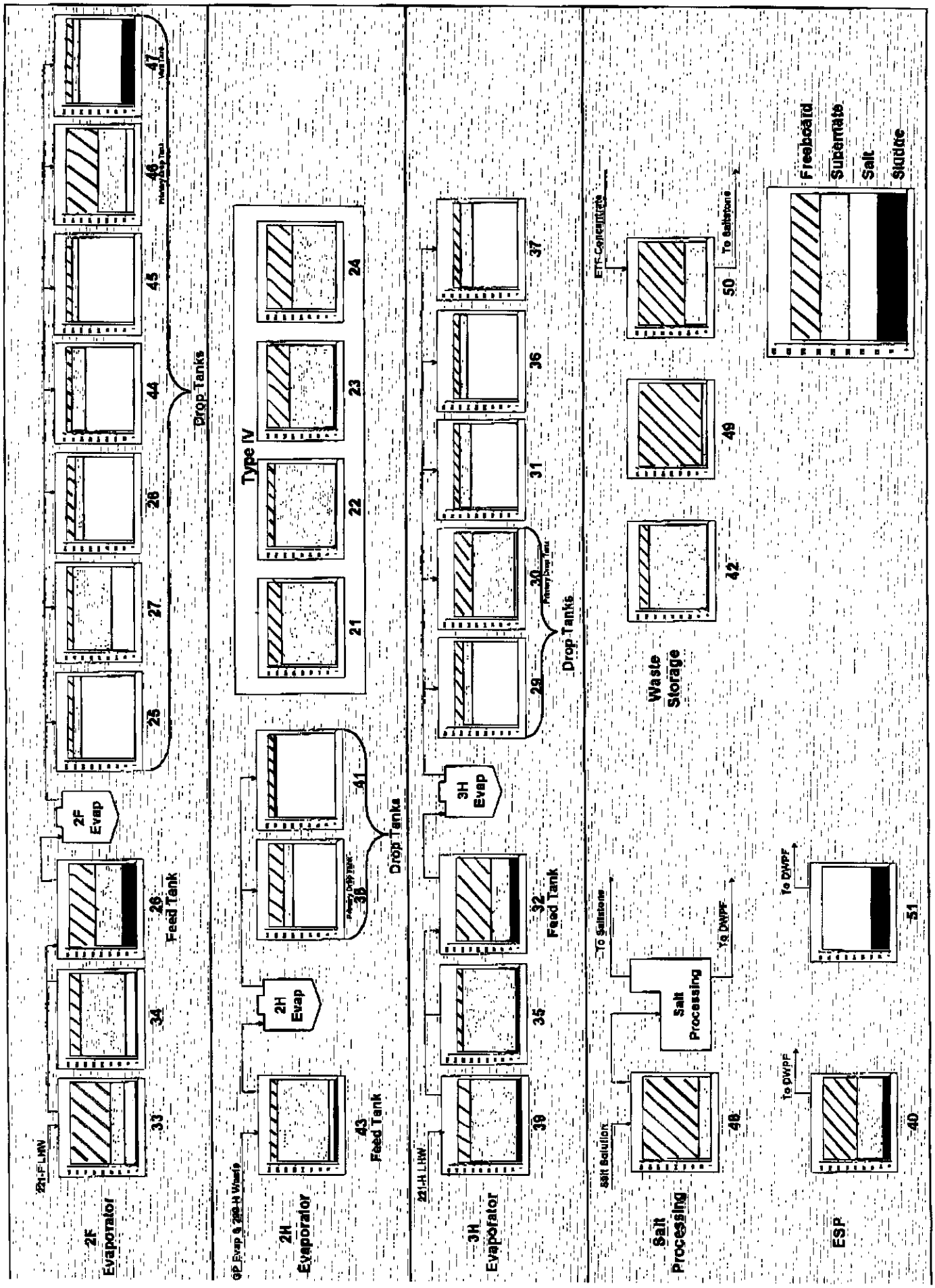

Jeff, here is some additional information to assist you with the TK 17 tritiated water scenarios.

Type III space must be available to maintain operation of DWPF and HLW facilities.

Emergency space, AB requirement (H-area)	1,300 K
Minimum evaporator operating space (H-area)	200 K
Emergency space, AB requirement (F-area)	1,300 K
Minimum evaporator operating space (F-area)	200 K
ITP processing tanks TK40,48,49	6.900 K
ESP processing tanks TK42,51	1.300 K
Saltstone feed tank TK50	1.300 K
Canyon receipt space	.500 K
DWPF receipt space	2.000 K

Much of this Type III space can't be interchanged or mixed with other waste streams because of the preparation phases that must take place for further processing i.e. ITP and ESP.

Most of the other Type III tanks that reside in the areas have been previously filled with salt and/or supernate.

The bottom line is there is little Type III space available to store .270 K gals of the TK 17 tritiated water period. If we wanted to wait the estimated 9 years for the tritium to decay that would tie up an entire tanks inventory (1.300 K gal) for this amount of time. We are running DWPF with little space contingency considering that ITP is not up and running.

I hope this helps you.

Post-it® Fax Note 7671	Date 10/12/00	# of pages ▶ 1
To Stuart Stinson	From Duke Hayes	
Co./Dept.	Co.	
Phone # 8-1537	Phone # 5-8362	
Fax # 8-0343	Fax # 5-4678	

W-0517

OSR 31-688 (Rev 11-20-97)
Stores 26-8910.00

WESTINGHOUSE SAVANNAH RIVER COMPANY

INTEROFFICE MEMORANDUM

November 29, 1999 ESH-ESS-99-0373

TO: C. R. HAYES, 703-H

FROM: G. H. LASKA, 742-A
(5-8838)

REPLACEMENT HIGH LEVEL WASTE EVAPORATOR OPERATING PERMIT

Per the attached letter, approval has been received to place the Replacement High Level Waste Evaporator into operation. This permit consists of the evaporator system, the cells, enclosure and service building; the evaporator feed system, a concentrate return system and an overheads system. In addition, please note the special conditions identified on page three (3) of the permit.

Should you have any questions or concerns, please contact me at 5-8838.

GHL/dkc
Att.

c: A. B. Gould, 703-A

D H E C
PROMOTE PROTECT PROSPER
South Carolina Department of Health
and Environmental Control

Lower Savannah Environmental Quality Control District
George P. Nelson Building, 206 Beaufort Street NE
Aiken, SC 29801
803-641-7670 Fax 803-641-7675

Serving
Aiken, Allendale, Bamberg, Barnwell,
Calhoun and Orangeburg Counties

PARTIAL APPROVAL TO OPERATE

Issued To: Mr. Mike M. Dukes, Manager
CERCLA, Geological, and Permitting Section
Environmental Protection Department
Westinghouse Savannah River Company
P. O. Box 616
Aiken, SC 29802

for the operation of the following system in accordance with Construction Permit No. **17,424-IW** dated January 25, 1993.

Project Name: Replacement High Level Waste Evaporator (RHLWE, 242-25H)
County: Aiken

Project Description: See page two (2) of this partial approval to operate.

The wastewater generated at this facility will be sent to the F/H Effluent Treatment Facility (ETF).

Treatment System Classification: Group IV-PC.

Special Conditions: The special conditions applicable to the Replacement High Level Waste Evaporator (RHLWE, 242-25H) are located on page three (3) of this partial approval to operate.

This operational approval is based on a final inspection conducted by personnel of this Department on November 9, 1999, and the Engineer's letter of certification signed by Joseph Carroll, P.E., S.C. Registration No.: 14028.

Date Issued: November 23, 1999

Brian L. Tripp
Environmental Engineer Associate
Lower Savannah EQC District

cc: Joseph Carroll, P.E., Bechtel Savannah River, Inc.
Gene Laska, Westinghouse Savannah River Company
Bill Botts, FEP Section, Bureau of Water
Marion Sadler, Water Facilities Permitting Division
David Caddell, Lower Savannah EQC
David Angle, Environmental Health

Project Description

The Replacement High Level Waste Evaporator (242-25H) project which consists of the following:

1) An Evaporator System

The evaporator system consists of an evaporator vessel which is a vertical cylindrical tank with a conical bottom and a dished head top cover. The volume of the vessel is approximately 9,150 gallons at normal liquid level and 19,000 when completely filled. The evaporator is sized to provide for adequate de-entrainment, decontamination factor, and tube bundle geometry requirements.

2) The Cells, Enclosure, and Service Building

The Cells, Enclosure and Service Building houses the evaporator, the condenser, the Gravity Drain Lines (GDLs), and overheads tank cells; the evaporator vessel, the overheads receiver tanks, the condenser unit, and mercury collection tanks; and the support systems and equipment for the evaporator.

3) The Evaporator Feed System

The evaporator feed system consists of the feed pump, feed piping (including a leak detection box and drain line) and flush water and test vent connections, feed jumpers, a pump support platform, Tank 32 (1.3 gallon capacity Type III) as the feed tank, and all other necessary pumps, piping, and appurtenances.

4) A Concentrate Return System

The concentrate return system consists of two (3) three-inch steam lift nozzles, a separator pot, and all necessary piping, pumps, and appurtenances. The concentrate is removed from the evaporator vessel by steam lift to a separator pot. The separator pot is provided to prevent siphoning from the evaporator and to remove any entrained steam within the concentrate. The steam is vented from the separator pot back to Tank 29. The concentrate is routed to Tank 30.

5) An Overheads System

The overheads system consists of de-entrainment column and demister, the overheads condenser, a mercury removal tank / mercury collection station, two (2) overheads receiver tanks, two (2) receiver tank pumps, an overheads sampling station, leak detection boxes, and all necessary piping, pumps, and appurtenances. The overhead system transfers the vapors (overheads) produced during the high level waste evaporation process to the Effluent Treatment Facility (ETF). If the radioactivity of the overheads exceeds limits, the overheads are recycled back to the feed tank (Tank 32) via a jacketed return line using an overheads transfer pump. The leak detection boxes provide a collection and detection mechanism for the overheads transfer to ETF and overheads return to Tank 32.

Special Conditions

1. The permittee shall maintain at each permitted facility a complete Operations and Maintenance Manual for the waste treatment system. The manual shall be made available for on-site review during normal working hours. The manual shall contain operation and maintenance instructions for all equipment and appurtenances associated the waste treatment system. The manual shall contain a general description of the treatment process(es) operating characteristics that will produce maximum treatment efficiency and corrective action to be taken should operating difficulties be encountered.

2. The permittee shall provide for the performance of routine daily treatment system inspections by a certified operator of the appropriate grade. The inspections shall include, but are not limited to, areas which require a visual operation to determine efficient operations and for which immediate corrective measures can be taken using the O & M manual as a guide. All inspections shall be recorded and shall include the date, time, and name of the person making the inspection, corrective measures taken, and routine equipment maintenance, repair, or replacement performed. The permittee shall maintain all records of inspections at the permitted facility and the records shall be made available for on-site review during normal working hours.

3. The permittee shall develop and maintain a Best Management Practice (BMP) Plan to identify and control the discharge of significant amounts of oils and the hazardous and toxic substances listed in 40 CFR, Part 117 and Tables II and III of Appendix D to 40 CFR, Part 122. The plan shall contain a listing of all potential sources of spills or leaks of these materials, a method of containment, a description of training, inspection and security procedures, and emergency response measures to be taken in the event of a discharge to surface water or plans and/or procedures which constitute an equivalent BMP. Sources of such discharges may include materials storage areas; in-plant transfer, process, and materials handling areas; loading and unloading operations; plant site runoff; and sludge and waste disposal areas. The BMP plan shall be developed, and updated as necessary, in accordance with good engineering practices, shall be documented in narrative form, and shall include any necessary plot plans, drawings, or maps. The BMP Plan shall be developed no later than six months after the issuance of the Final Approval (or modification) and implemented no later than one year after issuance of the Final Approval (or modification). A spill Prevention Control and Countermeasure (SPCC) plan may be used in lieu of a BMP plan if BMP requirements are satisfied. The BMP Plan or its equivalent shall be maintained at the plant site and shall be available for inspection by the EPA and Department personnel.

10. This approval is being issued after review and approval of a construction permit application submitted to the State of South Carolina pursuant to the requirements of a Federal Facilities Agreement (FFA) entered into by the United States Department of Energy (the permittee), the United States Environmental Protection Agency, and the States of South Carolina on January 15, 1993. In addition to the conditions specifically stated in this permit, the permittee shall be subject to all applicable requirements of Section IX, including referenced appendices, of the FFA.

W-0517

bc: D. T. Bignell, 742-A*
D. C. Bumgardner, 241-162H*
J. Carroll, 704-N*
V. G. Dickert, 703-H*
D. E. Gordon, 742-A*
G. S. Hoover, 703-A*
G. H. Laska, 742-A
L. T. Ling, 703-H*
D. J. Martin, 241-162H*
C. F. Milliner, 704-60H*
J. L. Newman, 703-H*
P. W. Schuetz, 703-H*
P. K. Smith, 703-H*
A. L. Towns, 703-A*
EPD Fileroom, 742-A
Records Administration, 773-52A

FILE INFO:
Operating Permit, RHLWE;
10040;
DOE 1-8.a(1);
Permanent, offer to NARA in 25 years.

W-0517

OSR 31-688 (Rev 11-20-97)
Stores: 26-8910.00

WESTINGHOUSE SAVANNAH RIVER COMPANY
INTEROFFICE MEMORANDUM

September 23, 1999

ESH-ESS-99-0297

TO: C. R. HAYES, 703-H

W. L. Payne

FROM: W. L. PAYNE, 742-A
(x5-3465)

DHEC APPROVAL FOR REROUTE OF RHLWE EFFLUENT

Attached is a copy of the letter from SCDHEC approving temporary reroute of RHLWE overheads to the H-Tank Farm storm water retention basin, which flows into H-12 outfall. Note that you are limited to a maximum disposal rate of 8,000 gallons per day and that this activity must end by November 10, 1999.

Please feel free to call me if you have any questions or concerns.

/wlp
attachment

c: G. S. Hoover, 703-A
D. E. Gordon, 742-A
D. C. Bumgardner, 241-162H
W. T. Davis, 707-H
R. A. Delcastilho, 241-161H
V. G. Dickert, 703-H
M. D. Johnson, 703-H
G. H. Laska, 742-A
D. J. Martin, 241-162H
H. McGovern, 241-246H
J. L. Newman, 703-H
D. T. O'Rear, 241-2H
S. J. Robertson, 704-59F
P. K. Smith, 703-H
C. B. Stevens, 724-21E
L. Towns, 703-A
A. W. Wiggins, 241-246H
L. L. Eldridge, 742-A
D. V. Osteen, 742-A

D H E C
PROMOTE PROTECT PROSPER
2600 Bull Street
Columbia, SC 29201-1708

September 15, 1999

Mr. William L. Payne
Westinghouse Savannah River Company
Environmental Protection Department
Bldg. 742-A, Rm. 180
Aiken, SC 29808

RE: Reroute of Replacement High Level Waste Evaporator Effluent
F/H Area ETF
Savannah River Site

Dear Mr. Payne:

This Office has reviewed the above referenced request to transfer the overheads to a storm drain which is diverted to the H-Tank Farm Stormwater Retention Basin. A leak occurred recently in the overheads transfer line core piping during simulant testing of the Replacement High Level Waste Evaporator. The effluent from the evaporator usually goes to the F/H area ETF (Effluent Treatment Facility) via a process sewer line.

Per a letter to A. Wright from W. Payne dated September 8 and an electronic mail message dated September 9, SRS indicated that effluent from the evaporator will be rerouted to the H-Tank farm stormwater retention basin, which discharges to outfall H-12. A maximum of 8,000 gallons per day will be sent to the basin for a period of approximately eight weeks from the date of this letter. The receiving basin has a capacity of eight million gallons. SRS has reassured the Department that no detectable concentrations of pollutants are normally present in the evaporator overheads during simulant runs. Therefore, outfall H-12 will not be impacted by the rerouted effluent from the evaporator to the stormwater basin.

Please accept this letter as approval to reroute the evaporator effluent to the stormwater detention basins as described above. Note that this approval is good for eight weeks from the date of this letter. If additional time is needed to repair the leaky line, please contact the Department prior to the approval expiration date. Should you have any questions or comments, please contact me at (803) 898-4238.

Sincerely,

Adrienne F. Wright
Environmental Engineer Associate
Industrial, Agricultural and Storm Water Permitting Division
Bureau of Water

cc: Keith Collinsworth, FFA/BLWM
Myra Reece, Lower Savannah EQC District

W-0517

Westinghouse
Savannah River Company
Aiken, SC 29808

June 28, 1999

ESH-CGP-99-0173

Mr. William C. Botts, P.E.
FEP Section Manager
Industrial, Agricultural and
Stormwater Permitting Division
South Carolina Department of Health and
Environmental Control
2600 Bull Street, Columbia, South Carolina 29201

Dear Mr. Botts:

REPONSE TO SCDHEC COMMENTS ON HLW TANK 11 OBSERVATIONS

Ref.: Letter, Botts to Dukes dated, 5/5/99

Attached is the SRS response to the referenced letter concerning a potential finding related to the secondary containment of High Level Waste (HLW) Tank 11. Although a definitive conclusion has not yet been reached regarding a possible through wall penetration, plans are well underway to assess the condition further.

Enhanced surveillance capabilities have allowed us to recognize the conditions in Tank 11. Please be aware that as these capabilities become more available and are refined, the possibility exists that similar anomalies will be observed in other HLW tank systems.

WSRC will keep you informed of further developments. Should you have any questions or need additional information, please contact Gene Laska at (803) 725-8838.

Yours very truly,

JWCook for

M. D. Dukes, Manager
CERCLA, Geological, and Permitting Section
Environmental Protection Department

ghl/aeo
c: C. V. Anderson, 703-A
K. A. Collinsworth, SCDHEC-Columbia
J. L. Crane, EPA Region IV
A. B. Gould, 703-A
M. C. Reece, SCDHEC-Lower Savannah District
M.F. Sadler, SCDHEC-Columbia

bc: D. T. Bignell, 742-A
D. J. Blake, 703-H
S. S. Cathey, 703-H
W. T. Davis, 707-H
J. N. Dewes, 703-H
V. G. Dickert, 703-H
A. R. Gough, 730-B
C. R. Hayes, 703-H
[redacted]
A. L. Towns, 703-A
B. L. Lewis, 703-H
T. J. Lex, 703-H
T. M. Monahon, 703-H
J. L. Newman, 703-H
P. K. Smith, 703-H
B. J. Wiersma, 773-A
EPD File, 742-A

Response to SCDHEC Questions/Concerns on the Tank 11 Annulus Observations

1. *Is there any evidence of past tank leakage into the annulus? If so, is this one of the tanks that had been previously identified as having leaked into the secondary containment?*

   Two leaksites were first observed in Tank 11 during camera inspections in 1974. The sites are at 189 and 235 inches above the tank bottom. The leaksites are attributed to cracks which resulted from nitrate-induced stress corrosion cracking. Infiltration of rainwater caused dry salt nodules at the leaksites to dissolve and cascade down the exterior tank wall, resulting in trace amounts of waste on the annulus floor. Groundwater also invades the annulus of Tank 11, as the tank rests below the water table. The fact that the Tank 11 primary had leaked in the past was documented in the Phase II Assessment Report for the F and H-Area High Level Radioactive Tank Farms, Revision 0, August 1991.

2. *Do any of the other HLW tanks exhibit the same condition in the secondary containment?*

   Tanks 1, 9, 10, 12, 13, 14, 15 and 16 have all leaked in the past. In all cases except Tank 16, leaked waste was contained in the annulus. Again, the leaksites are attributed to cracks that resulted from nitrate-induced stress corrosion cracking. In a manner similar to Tank 11, rainwater intrudes into the annulus of Tanks 9, 10 and 12 because the Tank 9-12 "four pack" rests below the water table. The observations noted in the 3/31/99 correspondence have not been seen in the other tanks. However, future enhanced video inspections could reveal similar conditions in other tanks.

3. *Please discuss the integrity of Tank 11. Could the tank possibly release into the annulus pan before the scheduled waste removal? If tank material were to leak into the annulus, could there be a release to the environment via the pathway of water intrusion?*

   Tank 11 does not receive fresh waste. The liquid level is maintained below the 189 inch leaksite. Because of the necessary addition of water during waste removal activities, it is possible that inactive leaksites could temporarily reactivate. However, warm air from the annulus ventilation system allows small leaks to dry on the primary wall. Installed leak detection equipment would identify a significant leak and allow time to cease waste removal activities. A release to the environment could occur if there has been a through-wall penetration in the annulus pan. A conclusion has not yet been reached whether or not a through-wall penetration in the annulus pan has occurred. Depending upon the outcome of the current investigation, additional pumping capacity could be provided in the secondary pan to remove accumulated material during waste removal.

   Follow-up enhanced video inspections conducted in 5/99 revealed conditions in the annulus not seen previously. These anomalies, located at the edge of the tank bottom, could indicate the presence of waste or carbonate deposits resulting from leaching of concrete by groundwater. SRS plans to sample these deposits in an attempt to determine their origin. It is important to note, however, that there has been no pitting corrosion noted on the primary tank.

4. *How often is the tank and annulus visually inspected by camera? In light of the recent findings, will there be an increase in the frequency of inspections?*

   For Tank 11, a detailed inspection is performed through all four annulus risers at least once per year. The riser inspections allow 25% of the primary tank to be inspected. A detailed inspection is conducted on the interior wall above the waste level on an as needed basis. Plans are to continue utilizing the enhanced video system through completion of the current investigation. Depending on the outcome of the current investigation, inspection frequency could increase in Tank 11 as well as other tanks.

5. *Please state whether or not any waste material has migrated outside the pan.*

   Although there is a trace amount of waste present on the annulus pan floor, there is no evidence that any of the waste has leaked from the secondary containment of Tank 11. No contamination has been found via monitoring wells in the direct vicinity of the Tank 9-12 "four pack".

6. *It is our understanding that there is some material inside the annulus which is believed to have intruded from outside the pan. If possible, the material should be sampled and characterized.*

   Plans are currently being undertaken to clean (hydro-flush) the suspect areas on the pan nuckle in an effort to determine if a penetration exists. If there is no penetration, the likely conclusion is that the deposits resulted from dripping of groundwater from above the annulus. Samples will also be taken of the material presently in the annulus to determine its contents.

7. *Please discuss the closure schedule for Tank 11. Is the current schedule adequate, or should a revision be considered based on the recent observations?*

   Current plans call for Tank 11 waste removal to begin in FY2002 with tank closure initiating in FY2006. It is not practical to accelerate Tank 11 waste removal at this time because of the time required to construct facilities and perform analytical activities. Design of waste removal equipment is in progress with construction to follow in FY2000.

W-057

OSR 31-688 (Rev 11-20-97)
Stores: 26-8910.00

WESTINGHOUSE SAVANNAH RIVER COMPANY

INTEROFFICE MEMORANDUM

BNFL

June 25, 1999

ESH-CGP-99-0191

TO: C. R. HAYES, 703-H

FROM: G. H. LASKA, 742-A

EXTENSION FOR REPLACEMENT HIGH LEVEL WASTE EVAPORATOR CONSTRUCTION COMPLETION

Ref.: Letter, Wright to Dukes dated 6/9/99

Per the attached and referenced letter, approval has been received to extend the evaporator project construction deadline until December 31, 1999. Please advise when construction is complete so that an inspection can be arranged with SCDHEC personnel.

Should you have any questions or concerns, please contact me at 5-8838.

ghl/tmj
Att.
c: A. B. Gould, 703-A

Letter, C. R. Hayes from G. H. Laska
ESH-CPG-99-0191, June 25, 1999

bc: D. T. Bignell, 742-A
D. C. Bumgardner, 241-162H
J. Carroll, 704-N
V. G. Dickert, 703-H
C. R. Hayes, 703-H
G. S. Hoover, 703-A
G. H. Laska, 742-A
L. T. Ling, 703-H
D. J. Martin, 241-162H
C. F. Milliner, 704-60H
J. L. Newman, 703-H
P. W. Schuetz, 703-H
P. K. Smith, 703-H
A. L. Towns, 703-A
EPD Fileroom, 742-A
Records Administration, 773-52A

File Info:
Construction Permit
17,424-IW
DOE 14-1.c(1)
10 years intervals

D H E C
PROMOTE PROTECT PROSPER
2600 Bull Street
Columbia, SC 29201-1708

June 9, 1999

Mr. M. D. Dukes, Manager
CERCLA, Geological, and Permitting Section
Environmental Protection Department
Westinghouse Savannah River Company
Bldg. 742-A, Rm. 168
Aiken, SC 29808

RE: Construction Permit #17,424-IW, Third Extension
Delay of Replacement High Level Waste Evaporator Construction Completion
Savannah River Site

Dear Mr. Dukes:

The Department has reviewed your May 25, 1999 request for an extension to the above referenced construction permit. Provided this extension will not impact the approved closure schedule, the extension is granted. The construction deadline for the evaporator project is extended until December 31, 1999.

Should you have any questions or comments, please contact me at (803) 898-4238.

Sincerely,

Adrienne F. Wright
Environmental Engineer Associate
Industrial, Agricultural and Storm Water Permitting Division
Bureau of Water

cc: Lower Savannah EQC
Keith Collingsworth, BLWM/FFA Section

W-0517

DRAFT

Westinghouse
Savannah River Company
Aiken, SC 29808

June 23, 1999

ESH-CGP-99-0173

Mr. William C. Botts, P.E.
FEP Section Manager
Industrial, Agricultural and
Stormwater Permitting Division
South Carolina Department of Health and
Environmental Control
2600 Bull Street, Columbia, South Carolina 29201

Dear Mr. Botts:

REPONSE TO SCDHEC COMMENTS ON HLW TANK 11 OBSERVATIONS (U)

Ref.: Botts to Dukes, 5/5/99

Attached is the SRS response to the referenced letter concerning a potential finding related to the secondary containment of High Level Waste (HLW) Tank 11. Although a definitive conclusion has not yet been reached regarding a possible through wall penetration, plans are well underway to assess the condition further.

Enhanced surveillance capabilities have allowed us to recognize the conditions in Tank 11. Please be aware that as these capabilities become more available and are refined, the possibility exists that similar anomalies will be observed in other HLW tank systems.

WSRC will keep you informed of further developments. Should you have any questions or need additional information, please contact Gene Laska at (803) 725-8838.

Yours very truly,

M. D. Dukes, Manager
CERCLA, Geological, and Permitting Section
Environmental Protection Department

ghl/aeo

cc: C. V. Anderson, 703-A
K. A. Collinsworth, SCDHEC-Columbia
J. L. Crane, EPA Region IV
A. B. Gould, 703-A
M. C. Reece, SCDHEC-Lower Savannah District
M.F. Sadler, SCDHEC-Columbia

2

bcc: D. T. Bignell, 742-A
D. J. Blake, 703-H
S. S. Cathey, 703-H
W. T. Davis, 707-H
J. N. Dewes, 703-H
V. G. Dickert, 703-H
A. R. Gough, 730-B
C. R. Hayes, 703-H
G. H. Laska, 742-A
B. L. Lewis, 703-H
T. J. Lex, 703-H
T. M. Monahon, 703-H
J. L. Newman, 703-H
P. K. Smith, 703-H
B. J. Wiersma, 773-A
EPD File, 742-A

Response to SCDHEC Questions/Concerns on the Tank 11 Annulus Observations

1. *Is there any evidence of past tank leakage into the annulus? If so, is this one of the tanks that had been previously identified as having leaked into the secondary containment?*

   Two leaksites were first observed in Tank 11 during camera inspections in 1974. The sites are at 189 and 235 inches above the tank bottom. The leaksites are attributed to cracks which resulted from nitrate-induced stress corrosion cracking. Infiltration of rainwater caused dry salt nodules at the leaksites to dissolve and cascade down the exterior tank wall, resulting in trace amounts of waste on the annulus floor. Groundwater also invades the annulus of Tank 11, as the tank rests below the water table. The fact that the Tank 11 primary had leaked in the past was documented in the Phase II Assessment Report for the F and H-Area High Level Radioactive Tank Farms, Revision 0, August 1991.

2. *Do any of the other HLW tanks exhibit the same condition in the secondary containment?*

   Tanks 1, 9, 10, 12, 13, 14, 15 and 16 have all leaked in the past. In all cases except Tank 16, leaked waste was contained in the annulus. Again, the leaksites are attributed to cracks that resulted from nitrate-induced stress corrosion cracking. In a manner similar to Tank 11, rainwater intrudes into the annulus of Tanks 9, 10 and 12 because the Tank 9-12 "four pack" rests below the water table. The observations noted in the 3/31/99 correspondence have not been seen in the other tanks. However, future enhanced video inspections could reveal similar conditions in other tanks.

3. *Please discuss the integrity of Tank 11. Could the tank possibly release into the annulus pan before the scheduled waste removal? If tank material were to leak into the annulus, could there be a release to the environment via the pathway of water intrusion?*

   Tank 11 does not receive fresh waste. The liquid level is maintained below the 189 inch leaksite. Because of the necessary addition of water during waste removal activities, it is possible that inactive leaksites could temporarily reactivate. However, warm air from the annulus ventilation system allows small leaks to dry on the primary wall. Installed leak detection equipment would identify a significant leak and allow time to cease waste removal activities. A release to the environment could occur if there has been a through-wall penetration in the annulus pan. A conclusion has not yet been reached whether or not a through-wall penetration in the annulus pan has occurred. Depending upon the outcome of the current investigation, additional pumping capacity could be provided in the secondary pan to remove accumulated material during waste removal.

   Follow-up enhanced video inspections conducted in 5/99 revealed conditions in the annulus not seen previously. These anomalies, located at the edge of the tank bottom, could indicate the presence of waste or carbonate deposits resulting from leaching of

concrete by groundwater. SRS plans to sample these deposits in an attempt to determine their origin. It is important to note, however, that there has been no pitting corrosion noted on the primary tank.

4. *How often is the tank and annulus visually inspected by camera? In light of the recent findings, will there be an increase in the frequency of inspections?*

For Tank 11, a detailed inspection is performed through all four annulus risers at least once per year. The riser inspections allow 25% of the primary tank to be inspected. A detailed inspection is conducted on the interior wall above the waste level on an as needed basis. Plans are to continue utilizing the enhanced video system through completion of the current investigation. Depending on the outcome of the current investigation, inspection frequency could increase in Tank 11 as well as other tanks.

5. *Please state whether or not any waste material has migrated outside the pan.*

Although there is a trace amount of waste present on the annulus pan floor, there is no evidence that any of the waste has leaked from the secondary containment of Tank 11. No contamination has been found via monitoring wells in the direct vicinity of the Tank 9-12 "four pack".

6. *It is our understanding that there is some material inside the annulus which is believed to have intruded from outside the pan. If possible, the material should be sampled and characterized.*

Plans are currently being undertaken to clean (hydro-flush) the suspect areas on the pan nuckle in an effort to determine if a penetration exists. If there is no penetration, the likely conclusion is that the deposits resulted from dripping of groundwater from above the annulus. Samples will also be taken of the material presently in the annulus to determine its contents.

7. *Please discuss the closure schedule for Tank 11. Is the current schedule adequate, or should a revision be considered based on the recent observations?*

Current plans call for Tank 11 waste removal to begin in FY2002 with tank closure initiating in FY2006. It is not practical to accelerate Tank 11 waste removal at this time because of the time required to construct facilities and perform analytical activities. Design of waste removal equipment is in progress with construction to follow in FY2000.

W-0517

D H E C

PROMOTE PROTECT PROSPER

2600 Bull Street
Columbia, SC 29201-1708

June 9, 1999

Mr. M. D. Dukes, Manager
CERCLA, Geological, and Permitting Section
Environmental Protection Department
Westinghouse Savannah River Company
Bldg. 742-A, Rm. 168
Aiken, SC 29808

RE: Construction Permit #17,424-IW, Third Extension
Delay of Replacement High Level Waste Evaporator Construction Completion
Savannah River Site

Dear Mr. Dukes:

The Department has reviewed your May 25, 1999 request for an extension to the above referenced construction permit. Provided this extension will not impact the approved closure schedule, the extension is granted. The construction deadline for the evaporator project is extended until December 31, 1999.

Should you have any questions or comments, please contact me at (803) 898-4238.

Sincerely,

Adrienne F. Wright

Adrienne F. Wright
Environmental Engineer Associate
Industrial, Agricultural and Storm Water Permitting Division
Bureau of Water

cc: Lower Savannah EQC
Keith Collingsworth, BLWM/FFA Section

W-0517

Westinghouse
Savannah River Company
Aiken, SC 29808

May 25, 1999

ESH-CGP-99-0165

Mr. W. C. Botts, P.E.
Industrial, Agricultural and
Stormwater Permitting Division
South Carolina Department of Health and
Environmental Control
2600 Bull Street
Columbia, South Carolina 29201

Dear Mr. Botts:

DELAY OF REPLACEMENT HIGH LEVEL WASTE EVAPORATOR PROJECT OPERATIONAL READINESS

Ref.: Letter, Vickers to Cook, 5/12/98

Simulant testing at the Replacement High Level Waste Evaporator (RHLWE) at the Savannah River Site (SRS) began on 1/11/99. During simulant runs to date, some expected operational performance requirements have not been met. Minor facility modifications, which do not require a permit modification, are planned to address the performance attainment issue. A revised schedule forecasts project completion in late 1999.

The referenced letter approved an extension to the construction completion date until 6/30/99. To allow for project completion under Construction Permit #17424-IW, SRS requests that the construction completion date in the referenced letter be extended from 6/30/99 to 12/31/99. This matter has been discussed between yourself and Gene Laska. If there are any questions, please contact Mr. Laska (803/725-8838).

Yours very truly,

M. D. Dukes

M. D. Dukes, Manager
CERCLA, Geological, and Permitting Section
Environmental Protection Department

ghl/aeo
c: M. C. Reece, SCDHEC-Lower Savannah District
A. B. Gould, 703-A

bc: D. T. Bignell, 742-A
D. C. Bumgardner, 241-162H
J. Carroll, 704-N
V. G. Dickert, 703-H
C. R. Hayes, 703-H
G. S. Hoover, 703-A
G. H. Laska, 742-A
L. T. Ling, 703-H
D. J. Martin, 241-162H
C. F. Milliner, 704-60H
J. L. Newman, 703-H
P. W. Schuetz, 703-H
P. K. Smith, 703-H
A. L. Towns, 703-A
EPD Fileroom, 742-A
Records Administration, 773-52A

File Info:
Construction Permit
10067
DOE 14-1.c(1)
10 years intervals

W-0517

OSR 21 688 (Rev 11-20-97)
Stores 26 8910 00

WESTINGHOUSE SAVANNAH RIVER COMPANY
INTEROFFICE MEMORANDUM

BNFL

May 18, 1999

ESH-CGP-99-0158

TO: C. R. HAYES, 703-H

FROM: G. H. LASKA, 742-A
(5-8838)

HIGH LEVEL WASTE TANK 11 OBSERVATIONS

Per the attached letter from SCDHEC, additional information is requested regarding the program being undertaken to evaluate the anomalies identified in the Tank 11 annulus. Please provide an update on the status of this program and include detailed information to address SCDHEC's specific concerns.

If you have any questions or require additional information regarding this request by SCDHEC, please contact me at 725-8838.

ghl/aeo
Att.*
c: A. B. Gould, 703-A
C. V. Anderson, 703-A

bc: M. D. Dukes, 742-A
G. H. Laska, 742-A*
A. R. Gough, 730-B
D. T. Bignell, 742-A
V. G. Dickert, 703-H*
B. L. Lewis, 703-H*
T. J. Lex, 703-H
T. M. Monahon, 703-H*
J. V. Odum, 742-A*
P. K. Smith, 703-H*
EPD File, 742-A*
Records Processing, 773-52A*

File Info:
HLW Tanks
10040
DOE 1-8.a(1)
Permanent

W-0517

2

D H E C

PROMOTE PROTECT PROSPER

2600 Bull Street
Columbia, SC 29201-1708

RECEIVED

MAY 17 1999

May 5, 1999

Mr. Michael D. Dukes, Manager
CERCLA Geological and Permitting Section
Westinghouse Savannah River Company
Bldg 703-A
Aiken, SC 29808-0001

Re:HLW Tank 11 Observations
Savannah River Site
Aiken County

Dear Mr. Dukes:

This letter is concerning the Tank 11 observations reported in your March 31, 1999 correspondence. As noted, the visual inspection indicated corrosion and possible degradation of the annulus pan. Your letter stated that a program was being undertaken to evaluate the situation.

This Office requests an update on the status of the program. In addition, a response to the following specific concerns would be appreciated.:

1. Is there any evidence of past tank leakage into the annulus? If so, is this one of the tanks that had been previously identified as having leaked into the secondary containment?

2. Do any of the other HLW tanks exhibit the same condition in the secondary containment?

3. Please discuss the integrity of Tank 11. Could the tank possibly release into the annulus pan before the scheduled waste removal? If tank material were to leak into the annulus, could there be a release to the environment via the pathway of water intrusion?

4. How often is the tank and annulus visually inspected by camera? In light of the recent findings, will there be an increase in the frequency of inspections?

5. Please state whether or not any waste material has migrated outside the pan.

6. It is our understanding that there is some material inside the annulus which is believed to have intruded from outside the pan. If possible, the material should be sampled and characterized.

7. Please discuss the closure schedule for Tank 11. Is the current schedule adequate, or should a revision be considered based on the recent observations?

If you wish to discuss, please contact me at (803) 898-3982.

Sincerely,

William C. Botts

William C. Botts, P.E.
FEP Section Manager
Industrial, Agricultural, & Storm
Water Permitting Division

cc:Myra Reece, Lower Savannah EQC District
Ann Clark, Bureau Administration
Keith Collinsworth, FFA Section, BLWM
Shelly Sherritt, Haz Waste, BLWM
Keehna Frasier, BLWM

W-0517

KEITH COLLINGSWORTH 896-4055
BILL BOTTS 898-3982

Westinghouse
Savannah River Company
Aiken, SC 29808

March 31, 1999

ESH-CGP-99-0099

Mr. William C. Botts, Engineer
Industrial, Agricultural and Stormwater
Permitting Division
South Carolina Department of Health and
Environmental Control
2600 Bull Street
Columbia, South Carolina 29201

Dear Mr. Botts:

SUMMARY OF HLW TANK 11 OBSERVATIONS (U)

Ref.: Telecon, Laska to Botts, 3/30/99

Consistent with the intent of Construction/Operating Permit #17424-IW and Section IX and Appendix B of the Savannah River Site (SRS) Federal Facility Agreement and as follow-up to the referenced phone conversation, SRS is providing written notification of a potentially significant finding related to the secondary containment of High Level Waste (HLW) Tank 11.

During the support of an operational activity on March 16, 1999, a change in the appearance of the annulus pan knuckle was observed. Although the annulus was dry, general corrosion was visible which indicates the previous presence of water at the knuckle and slightly above the knuckle on the vertical wall of the pan. In addition, several oval-shaped indications were observed using an enhanced video camera, which had been recently placed into service. These oval shapes could indicate the potential of significant degradation of the annulus pan. The following day, March 17, 1999, similar general corrosion and possible degradation was observed at another location in the annulus pan.

Tank 11 is located below the water table in H-Area and thus water frequently intrudes the annulus space. This occurrence has been noted in several HLW tanks on previous inspections. The tanks have ventilation equipment to circulate warm, dry air in the annulus space in order to heat the tank walls sufficiently to evaporate excess moisture. Recent problems with the steam system have reduced the effectiveness of the ventilation system on Tank 11. Thus, water may have remained in the annulus space for extended periods of time.

TELECON: CHUCK HAYES
MIKE DUKES
GENE LASKA
KEITH COLLINGSWORTH
BILL BOTTS

Several experts were consulted to evaluate the indications. However, based on videotape and photographs taken, no definitive conclusions could be made since the visuals did not show enough depth of field. A program is being undertaken to evaluate these anomalies and ultimately address this problem.

WSRC will keep you informed of further developments. Should you have any questions or need additional information, please contact Gene Laska at (803) 725-8838.

Yours very truly,

M. D. Dukes, Manager
CERCLA, Geological, and Permitting Section
Environmental Protection Department

mpw/aeo
cc: C. V. Anderson, 703-A
K. A. Collinsworth, SCDHEC-Columbia
J. L. Crane, EPA Region IV
A. B. Gould, 703-A
M. F. Sadler, SCDHEC-Columbia

bcc: D. T. Bignell, 742-A
J. N. Dewes, 703-H
V. G. Dickert, 703-H
M. D. Dukes, 742-A
A. R. Gough, 730-B
C. R. Hayes, 703-H
G. H. Laska, 742-A
B. L. Lewis, 703-H
T. J. Lex, 703-H
T. M. Monahon, 703-H
J. V. Odum, 742-A
P. K. Smith, 703-H
EPD File, 742-A

reached a leak detection probe. However, remote inspections detected the dry deposits of leaked waste in the annuli of these tanks.

The waste tank in-service inspection program is comprised of visual imagery inspection and ultrasonic steel thickness measurement. This report gives results of the 1997 inspection program and summarizes significant findings of previous in-service inspections for each waste tank.

Tank Description

SRS has subsurface storage tanks of four different designs. All of the tanks are constructed of carbon steel and reinforced concrete. They serve as containment vessels for storage and processing of radioactive wastes. Appendix A lists tank location, design type, project number, and construction period. A brief description of the different tank designs is given in the following paragraphs.

Type I Tanks

The 12 original storage tanks constructed between 1951 and 1953 are designated Type I tanks. Tanks 1 through 8 are in F Area and Tanks 9 through 12 are in H Area. Each primary tank has a capacity of 750,000 gallons, is 75 feet in diameter and 24 1/2 feet high. Figure 1 shows the essential features of Type I tanks, including the primary tank, the secondary pan, and the concrete support structure.

The primary container is a closed cylindrical tank with flat top and bottom constructed from 1/2-inch-thick steel plates. The top and bottom are joined to the cylindrical sidewall by curved knuckle plates. The primary tank is set within a circular pan of 1/2-inch-thick steel plates. The annulus pan is 5 feet deep and 5 feet larger in diameter than the primary tank, thus forming an annular space 2 1/2 feet wide. The tank and pan are set on a 30-inch-thick base slab and are enclosed by a cylindrical 22-inch-thick reinforced concrete wall and a flat concrete roof, also 22 inches thick. There are twelve 2-foot-diameter concrete columns within the primary tank to support the roof. Each column has a flared capital and is encased in 1/2-inch-thick steel plate.

A 9-foot layer of earth was placed over the tanks for radiation shielding. Cooling for each type I tank is provided by 36 parallel (water pipe) cooling coils.

A dehumidification duct in the annulus of each tank is routed from the tank top to the bottom of the annulus where it encircles the tank. The duct has distribution outlets and its cross-sectional area decreases as the distance from the air supply increases. Access to the tank interior is provided at eight locations, and to the annular space at four locations, through riser pipes. Each of the 12 riser pipes is capped at the top with a concrete plug. Each plug is provided with two 5-inch-diameter ports equipped with removable plugs. Some of these ports provide access for inspections.

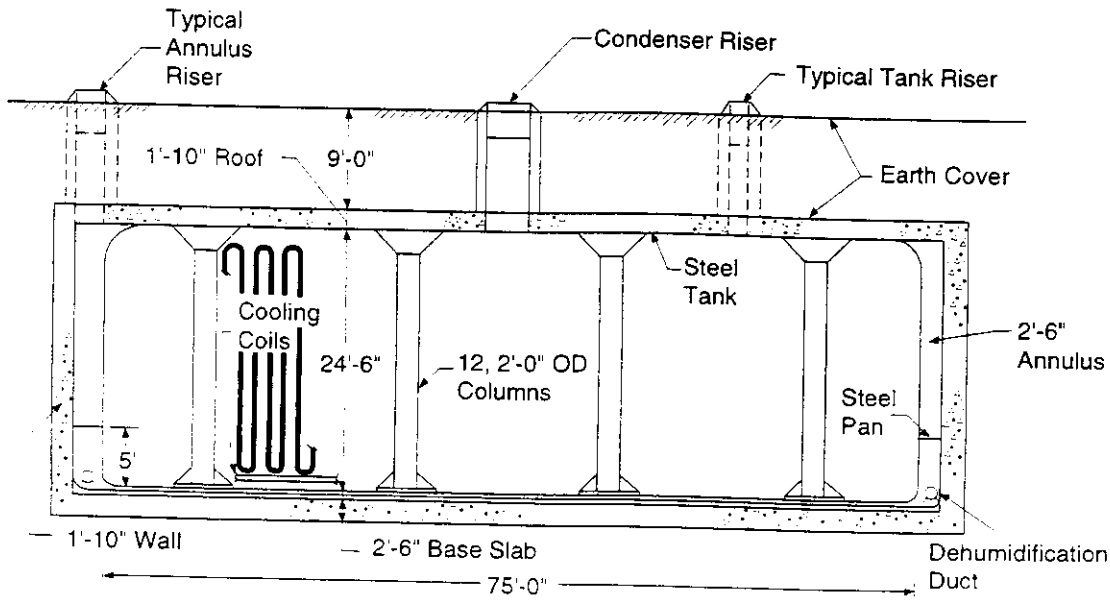

Figure 1. Cooled Waste Storage Tank, Type I (Original 750,000 Gallons).

4.0 ASSESSMENT OF PRIMARY CONTAINMENT

4.1 Type I Waste Tanks

Type I Waste Tanks are the original 12 waste tanks constructed during 1952 and 1953. DOE plans to request that the tanks that do not have any known leak sites (2-8 in F-Area) be approved as an equivalent device. This assessment is provided to examine the integrity of the tanks that have leaked in the past (1F, 9-12H). If the equivalent device determination is not approved by SCDHEC, this assessment will also apply to the Type I Waste Tank that have not leaked. Type I Tanks consist of primary tank (carbon steel construction), a secondary pan (carbon steel construction 5-feet high) and a concrete encasement surrounding the tank. The Type I Waste Tanks have a nominal volume of 750,000 gallons.

4.1.1 Design Standards

The primary container is a closed cylindrical tank with a flat top and bottom constructed from 1/2-inch thick ASTM-A285-50T, Grade B, carbon steel plate, fire box quality, suitable for submerged arc welding. The top and bottom are joined to the cylindrical side wall by 1/2-inch thick curved knuckle plates. Twelve concrete columns (each 2-feet in diameter, having flared capitals, and encased in

1/2 inch steel plate) are installed within the primary tank to support the flat 22-inch thick concrete roof. Welds in the primary tank were radiographically inspected, defects were corrected, and the welds were rechecked radiographically. The welds in the flat bottoms of the primary tank were vacuum-tested for leaks. Additionally, the primary tank was hydrostatically tested. The water was maintained at full height in the tank for 24 hours before inspection for leaks was made. Welding procedures were performed in accordance with Section IX of the ASME Boiler and Pressure Vessel Code. Type I Waste Tanks were designed and fabricated in accordance with the ASME Boiler Code for Unfired Vessels, Section VIII, 1949 Edition.

Several top openings provide access to the tank and annulus. A steel-lined reinforced concrete riser extends through the earth cover to grade level at each riser location. The risers are closed with stepped concrete plugs. Many of the openings are used for instruments installed in the primary tank or in the annulus. A few of the openings are used for tank venting and annulus dehumidification connections. Principal instruments installed in each tank are:

- <u>Liquid Level</u> - In the primary tank is measured by a conductivity probe on the end of a graduated tape

reeled up or down by a motor drive. At least two conductivity probes are installed in each annulus to detect the presence of any liquid in the secondary pan. Evidence of leakage into the annulus, as well as high liquid level in any of these waste tanks, is signaled to one of the tank farm control rooms.

- Temperature - At least one thermowell, with multiple thermocouples, is installed in every tank. In addition, a thermocouple measures tank vent and steel wall temperatures. Temperatures are recorded in the control room and/or valve house. All cooling coils are equipped with thermowells at the outlet end. Active coil thermowells and condenser cooling water outlets are supplied with indicating thermometers.

- Pressure - All cooling coils (except failed coils) are equipped with pressure relief valves at the outlet. The inlet side of both active and spare coil circuits is equipped with a connector for attachment of a pressure gage, if needed. Sensitive pressure gages are installed at several points in the tank ventilation system to detect cessation of flow or filter plugging.

4.1.2 Waste Characteristics

Type I waste tanks are used for storage of both high and low heat wastes. No Type I Waste Tank is currently receiving fresh waste. The Current Usage column of Attachment A indicates the type of waste stored in each Type I Waste Tank. Specific characteristics and constituents of the high and low heat wastes are included in Attachment B.

4.1.3 Corrosion Protection

All exposed interior surfaces of the primary tank including cooling coils were sprayed with a corrosion inhibitor to limit rusting before the tank was placed in service. The primary exterior, and the secondary pan exterior and interior surface were given one primary and two finish coats of paint. Corrosion protection of the interior of the tank is primarily provided by controlling the chemistry of the waste. Proper chemistry controlled waste is compatible with the carbon steel tank and pan.

All leaks in the Type I Waste Tanks have been caused by nitrate - induced stress corrosion cracking (SCC) prior to these control measures being employed. Laboratory studies, in which specimens were forced to crack by

applied tensile loads, have led to an understanding of the conditions required for stress corrosion cracks to develop in the waste tanks and have provided the basis for controlling the waste compositions. SCC in mild carbon steel is caused by a combination of high stresses in the steel and the exposure of the steel to an aggressive nitrate (NO_3) environment. The tendency to crack is enhanced as the temperature increases. The right combination of steel stress, nitrate rich environment, and temperature results in the initiation and propagation of a crack in the steel. The elimination of any one factor (stress, nitrate rich environment, or temperature) significantly reduces the corrosion potential.

During waste transfer operations, sufficient sodium hydroxide (NaOH) or sodium nitrite ($NaNO_2$) are added to the waste stream to inhibit nitrate corrosion. Cooling coils (2 inch diameter, schedule 40 seamless carbon steel pipe, constructed to ASTM A 106 or A 53, Grade A) lower the waste temperatures.

The primary tank ventilation equipment is used to prevent the release of radionuclides to the environment. This equipment consists of HEPA filters (inlet and outlet), a condenser, a demister (optional), a steam heater, and an exhaust fan. If required, the primary tank ventilation

equipment could be used to cool the contents of the waste tank. Two additional risers are available on each Type I waste tank which can be used to accommodate the installation of two additional parallel ventilation systems. The operation of the primary tank ventilation equipment to cool the contents of the waste tank is not currently used and is only to be used as a last resort.

The primary ventilation system was initially considered to be tank breathing plus fill displacement. Radiolytic decomposition of water and organic materials in the tanks generates hydrogen, and continuous ventilation in tanks containing high-level waste must be provided to control the hydrogen concentration below the lower flammability limit. Changes were made to each tank ventilation system to provide a tank vapor-space purge of about 150 scfm of air.

The Type I waste tanks are also equipped with an annulus ventilation system to prevent condensation within the annulus and to maintain the primary tank shell below the specified temperature limits. The dehumidification equipment consists of a fan, a heater, and ductwork. The equipment is operated to maintain the annular space atmosphere temperature above the dew point. HEPA filters were installed on the annulus ventilation system for each

of the Type I waste tanks to prevent the release of radionuclides which could enter the annulus through the leak sites discovered in the Type I waste tanks.

4.1.4 Age

Type I Waste Tanks were constructed during 1952 and 1953 therefore making them 38 to 39 years old. Specific construction and operation dates are included on Attachment A.

4.1.5 Integrity Examination

Type I tanks that have leaked (Tanks 1, and 9-12) have sealed themselves. The leak sites seal themselves when waste leaks through a then dries into a solid salt cake on the annular side of the tank wall. The tank inspection program verifies that the self sealing is effective in stopping the leak. However, during waste removal operations, when liquid contacts the leak site, the salt cake sealing the leak will probably redissolve and reactivate the leak. DOE currently plans to add pumping capacity in the secondary pan so that the leaking waste does not overflow the pan during these operations.

Based on the information provided by DOE, the Type I Tanks 1, 9, 10, 11, and 12 are fit to store the material they currently contain until their scheduled closure provided that all monitoring and standard operating procedures are followed. DOE plans to request approval as equivalent devices for the secondary containment of Type 1 Tanks 2 through 8. However, in the event approval is not obtained, based on the information provided by DOE, these tanks also are fit to store the material they contain until their scheduled closure provided that all monitoring and standard operating procedures are followed.

4.2 Type II Waste Tanks

Four Type II waste tanks (Tanks 13-16) were constructed in H-Area between 1955 and 1956. All of the Type II waste tanks have multiple leak sites; Tank 16 was removed from service in 1972 and emptied due to the excessive number of leak sites which formed in this tank. This tank is currently being addressed pursuant to the RCRA corrective actions (i.e., RCRA Facility Investigation) provisions required by Section 3004(u) of the Hazardous and Solid Waste Amendments of 1984. Type II waste tanks consist of a primary tank (carbon steel construction), a secondary containment pan (carbon steel construction 5-feet high), and a concrete encasement which surrounds the tank system. Type II waste tanks have a nominal volume of 1,030,000 gallons.

Westinghouse
Savannah River Company
Aiken, SC 29808

May 18, 1998

ESH-CGP-98-0167

TO: C. R. HAYES, 703-H, RM 31

glaska

FROM: G. H. LASKA, 742-A

CONSTRUCTION PERMIT NO. 17424-IW SECOND EXTENSION - DELAY OF REPLACEMENT HIGH LEVEL WASTE EVAPORATOR CONSTRUCTION COMPLETION

Attached is a copy of the SCDHEC Approval Letter extending the construction deadline for the evaporator project until June 30, 1999.

Please notify me when construction is complete so I can arrange for a final inspection and SCDHEC approval of the system.

If there are any questions or concerns, please contact me at extension 5-8838.

ghl/tmj
Att.*
c: D. T. Bignell, 742-A*
D. C. Bumgardner, 241-162H, Rm. 9
J. Carroll, 704-N, Rm. 18
R. K. Cauthen, 704-S, Rm. 16
J. W. Cook, 742-A
G. S. Hoover, 703-A, Rm. B214
G. H. Laska, 742-A*
L. T. Ling, 703-H, Rm. 18
D. J. Martin, 241-162H, Rm. 11
W. P. Mayson,704-61H, Rm. 1
G. E. Turner, 703-A, Rm. B111
EPD Fileroom, 742-A*
Records Administration, 773-52A*

D H E C
PROMOTE PROTECT PROSPER
2600 Bull Street
Columbia, SC 29201-1708

MAY 15 1998
ENVIRONMENTAL PROTECTION D
WESTINGHOUSE SAVANNAH RIVER

May 12, 1998

Mr. J. W. Cook, Manager
CERCLA, Geological, and Permitting Section
Environmental Protection Department
Westinghouse Savannah River Company
Bldg. 742-A Rm 196
Aiken, SC 29808-0001

RE: Construction Permit #17424-IW Second Extension
Delay of Replacement High Level Waste Evaporator Construction Completion
Savannah River Site
Aiken County

Dear Mr. Cook:

This Office has reviewed your April 27, 1998 request for an extension to the above-referenced construction permit. Since your last extension request, the Department has approved the High Level Waste Tank Removal Plan and Closure Schedule. Therefore, at this time, this Office will grant an extension of the construction deadline for the evaporator project until June 30, 1999 since this extension will not impact the approved closure schedule.

Should you have any questions or comments, please contact me at 803-734-0819.

Sincerely,

Melinda G. Vickers

Melinda G. Vickers
Environmental Engineer Associate
Industrial, Agricultural and Storm Water Permitting Division

mgv

cc: Lower Savannah EQC
Keith Collinsworth, BLWM/FFA Section

W-0517

Westinghouse
Savannah River Company
Aiken, SC 29808

ESH-CGP-98-0127

April 27, 1998

Ms. M. G. Vickers
Industrial, Agricultural and
Stormwater Permitting Division
South Carolina Department of Health and
Environmental Control
2600 Bull Street
Columbia, SC 29201

Dear Ms. Vickers:

DELAY OF REPLACEMENT HIGH LEVEL WASTE EVAPORATOR PROJECT CONSTRUCTION COMPLETION (U)

Ref.: Letter, Vickers to Cook, 12/18/97

Construction of the Replacement High Level Waste Evaporator (RHLWE) at the Savannah River Site (SRS) is estimated to be better than 95% complete at this time. The current schedule forecasts project completion in mid 1999. When completed, the RHLWE will replace the function previously performed by the 1H Evaporator, which is out of service.

The referenced letter approved an extension to the construction completion date only until 6/30/98. At the time, the SRS Waste Removal Plan and Schedule (WRP&S) had not been approved by SCDHEC. On 2/26/98, SCDHEC approved the WRP&S. Further, the RHLWE completion delay does not impact the approved WRP&S.

To allow for project completion under Construction Permit #17424-IW, SRS requests that the construction completion date in the referenced letter be extended from 6/30/98 to 6/30/99. This matter has been discussed between yourself and Gene Laska. If there are any questions, please contact Mr. Laska (803/725-8838).

Yours very truly,

J W Cook

J. W. Cook, Manager
CERCLA, Geological and Permitting Section
Environmental Protection Department

GHL:aeo

c: M. C. Reece, SCDHEC-Lower Savannah District
A. B. Gould, 703-A

Letter, M. G. Vickers from J. W. Cook
ESH-CGP-98-0127, April 27, 1998

bc: D. T. Bignell, 742-A
D. C. Bumgardner, 241-162H
J. Carroll, 704-N
R. K. Cauthen, 704-S
C. R. Hayes, 703-H
G. S. Hoover, 703-A
G. H. Laska, 742-A
L. T. Ling, 703-H
D. J. Martin, 241-162H
W. P. Mayson, III, 704-61H
G. E. Turner, 703-A
EPD Fileroom, 742-A
Records Administration, 773-52A

W-0517

OSR 3-4A-W (Rev 1-89)

WESTINGHOUSE SAVANNAH RIVER COMPANY

INTER-OFFICE MEMORANDUM

ESH-CGP-97-0398

December 30, 1997

TO: T. G. WINETEER, 703-H

FROM: C. R. HAYES, 742-A

SCDHEC EXTENSION OF CONSTRUCTION PERMIT #17424-IW EXPIRATION DATE (U)

Attached is a copy of the SCDHEC letter granting an extension to the subject permit expiration date. To allow construction of the Replacement High Level Waste Evaporator to continue beyond 1/1/98, SCDHEC has extended the construction complete expiration date to 6/30/98. Upon receipt and review of the Waste Removal Plan and Schedule, which is due to them by 1/15/98, SCDHEC will consider adjusting the 6/30/98 date.

Please contact me if there are any questions.

CRH:dkc
Att.

cc: D. T. Bignell, 742-A
J. Carroll, 704-N
R. K. Cauthen, 704-S
J. W. Cook, 742-A
N. R. Davis, 703-H
J. W. French, 703-H
A. R. Gough, 730-B
R. M. Satterfield, 719-4A
G. E. Turner, 703-A
EPD Files, 742-A
Records Processing, 773-52A

PROMOTE PROTECT PROSPER
2600 Bull Street
Columbia, SC 29201-1708

DEC 22 1997
ENVIRONMENTAL PROTECTION DEPT.

December 18, 1997

Mr. J. W. Cook, Manager
CERCLA, Geological, and Permitting Section
Environmental Protection Department
Westinghouse Savannah River Company
Bldg. 742-A Rm 196
Aiken, SC 29808-0001

RE: Construction Permit #17424-IW Extension
Delay of Replacement High Level Waste Evaporator Construction Completion
Savannah River Site
Aiken County

Dear Mr. Cook:

This Office has reviewed your December 2, 1997 request for an extension to the above-referenced construction permit. Since this evaporator will be part of the high level waste system, the Department would like time to evaluate the impact of the evaporator construction schedule on the High Level Waste Closure Schedule. Therefore, at this time, this Office will grant an extension of the construction deadline until June 30, 1998. Upon finalization of the tank closure schedule, this construction deadline may be adjusted accordingly to incorporate the evaporator into the closure schedule.

Should you have any questions or comments, please contact me at 803-734-0819.

Sincerely,

Melinda G. Vickers

Melinda G. Vickers
Environmental Engineer Associate
Industrial, Agricultural and Storm Water Permitting Division

mgv

cc: Lower Savannah EQC
Keith Collinsworth, BLWM/FFA Section

W-0517

Westinghouse
Savannah River Company
Aiken, SC 29808

ESH-CGP-97-0373

December 2, 1997

Ms. M. G. Vickers
Industrial, Agricultural and
Stormwater Permitting Division
South Carolina Department of Health and
Environmental Control
2600 Bull Street
Columbia, South Carolina 29201

Dear Ms. Vickers:

DELAY OF REPLACEMENT HIGH LEVEL WASTE EVAPORATOR PROJECT CONSTRUCTION COMPLETION (U)

Ref.: Construction Permit #17424-IW

Due to continuing funding shortfalls, the Savannah River Site (SRS) has experienced delays in completing construction of the Replacement High Level Waste Evaporator (RHLWE). Construction is estimated to be better than 93% complete at this time. The current schedule forecasts projects completion in mid 1999. When completed, the RHLWE will replace the function previously performed by the 1H Evaporator, which is out of service.

To allow for project completion under the referenced construction permit, SRS requests that the construction completion date in the permit be extended from 1/1/98 to 9/30/99. This matter has been discussed between you and Chuck Hayes. If there are any questions, please contact Mr. Hayes (803/725-8838).

Yours very truly,

J W Cook

J. W. Cook, Manager
CERCLA, Geological and Permitting Section
Environmental Protection Department

CRH:aeo

cc: M. C. Reece, SCDHEC-Lower Savannah District
A. B. Gould, 703-A

Letter, M. G. Vickers from J. W. Cook
ESH-CGP-97-0373, December 2, 1997

bcc: D. T. Bignell, 742-A
R. K. Cauthen, 704-S
A. R. Gough, 730-B
C. R. Hayes, 742-A
G. S. Hoover, 703-A
L. T. Ling, 703-H
J. L. Newman, 703-H
R. M. Satterfield, 719-4A
G. E. Turner, 703-A
T. G. Wineteer, 703-H
EPD Fileroom, 742-A
Records Administration, 773-52A

cc:Mail for: Chuck Hayes W-0517

Subject: Tank 50 Valve Box Inspection (U)
From: Chuck Hayes 12/2/97 3:11 PM
To: Rm Campbell

Based upon my interim construction inspection performed this past summer and given the fact that construction is complete, you may now place the Tank 50 valve box and associated appurtenances into service. Please contact me if you have any questions

cc:Mail for: Chuck Hayes

W-0517

Subject: DISASSEMBLY BASIN SLUDGE
From: Bill Payne at SRCCA04 10/14/97 4:16 PM
To: Hollis Martin at SRCCC04
cc: Chuck Hayes at SRCCA02
cc: Larry Haney at SRCCA16
cc: John Brookshire at SRCCA03

Lee,

I went ahead and discussed DB sludge with Larry Haney. He said the burial ground does not have a solid waste permit and all you will need to do to put the sludge there is meet their WAC.

As I understand what you told me, the DB waste is an influent source on the Tank Farm Wastewater Permit. You want to dewater DB water w/ a pressure filter, recycle it back to the DB, and dispose the sludge to the burial ground. Alternatively, you want to put the DB water in F/H-ETF. I called Melinda Vickers at DHEC. She said that a simple letter notifying her of the elimination of the DB water as a source to the Tank Farm in favor of disposing it in the ETF or burial ground would suffice. Approval would neither be necessary for it, nor for operation of the filter since it is being used as process equipment for recycle only.

If I've misstated anything, please correct me. Otherwise, send me a memo with the specifics of what you want to do and I'll write a notification to DHEC that will cover you.

Bill

cc:Mail for: Chuck Hayes

W-0517

Subject: Temporary HLW Processing Changes (U)
From: Chuck Hayes 8/20/97 8:53 AM
To: vickermg@columb32.dhec.state.sc.us at MAILHUB

Just wanted to update you on the continuing HLW (temporary) changes. If you recall a couple of months ago (6/24, to be exact), we informed you of some changes in the temporary storage of DWPF recycle. Instead of the recycle wastewater going directly to the evaporator feed tanks, we were planning to temporarily hold it up in Tank 40 and/or 42 until normal evaporator processing could resume.

Normal evaporator processing has yet to resume. As a result, we still have the need to temporarily hold up recycle wastewater. Another option now available to us is Tank 22. Remember, as a result of the valve box addition at Tank 50, Tank 22 was removed from the ITP process. Tank 22 was previously used to store ITP washwater and was designated to store Latewash recycle. Because of the availability of Tank 22, we would like to have the option (in addition to the aforementioned) of sending relatively clean DWPF recycle there (it will end up back at the evaporator feed tanks after all). Although it is a Type IV tank, Tank 22 has no known leaks and has served its purpose of storing dilute wastewater well in the past.

As before, SRS considers this temporary change "normal operations" and SCDHEC approval to proceed is not needed. If you disagree or have questions, please let me know!

P.S. How did the waste removal / tank closure schedule meeting on Tuesday go?

cc:Mail for: Chuck Hayes

Subject: Temporary HLW Processing Modification-DWPF Recycle (U)

From: Chuck Hayes 6/24/97 9:36 AM

To: vickermg@columb32.dhec.state.sc.us at MAILHUB

This memo is serving as followup to our phone conversation last week about the temporary use of Tank 40 and/or 42 for storing DWPF recycle wastewater. Tank 43 normally receives DWPF recycle and feeds it to the 2F Evaporator for volume reduction. Because 2F has been down for maintenance, Tank 43 is filling up. Until 2F is brought back on line (which should be soon) we will use Tank 40 and/ or Tank 42 for DWPF recycle storage. Both of these tanks are Type III Tanks, having full secondary containment. The washwater will be used in the Extended Sludge Processing step and will eventually be sent to Tank 43 anyway.

Per our conversation, SRS considers this "normal operations" and no SCDHEC approval is needed to proceed.

Thanks for your cooperation and please let me know if you have any questions!

W-0517

WESTINGHOUSE SAVANNAH RIVER COMPANY
ENVIRONMENTAL PROTECTION DEPARTMENT
BUILDING 742-A
AIKEN, SC 29808

FAX NUMBER: 803-725-4676

FAX COVER SHEET

NUMBER OF PAGES 7 *(Excluding cover sheet)* DATE 6-5-97

TO:	LOCATION:	FAX NUMBER:	PHONE NUMBER:
TED WINETEER	703-H	8-8091	

FROM: CHUCK HAYES

PHONE NUMBER: 5-8838

COMMENTS...

1. SEE ATTACHED RE: CONCRETE ENCASEMENT FOR WASTE TRANSFER LINES
2. WE HAVE NOT TOLD THE STATE ABOUT ABANDONING THESE IN PLACE
3. LOOKS LIKE WE HAVE SOME WORK TO DO (BOTH ENGINEERING & REGULATORY WISE) TO RETURN THESE TO SERVICE
4. PLEASE LET ME KNOW THE INTENDED SCOPE & DURATION FOR USE OF THESE LINES

THANKS

SAFETY • RESPONSIBILITY • SECURITY
SRS
SAVANNAH RIVER SITE

Classification
Unclassified

Author: Rm Campbell at SRCCA02
Date: 9/16/96 12:54 PM
TO: Chuck Hayes
CC: Russell Nordstrom at MAILHUB
CC: Sharon Marra at MAILHUB
CC: Douglas Blue at MAILHUB
Subject: Degradation of Concrete Pipe Encasement
---------- Message Contents ----------

RE: Technical Review M-DCF-F-00596 dated 09/05/96
F-Area Tank Farm DB1 and Tanks 1-8 Waste Transfer Lines

Due to the degradation of the concrete encasement for sixteen (16) waste transfer lines from Diversion Box No. 1 to Tanks 1 through 8 (two lines for each tank) resulting in the loss of secondary containment, the encasement and lines will be abandoned in place. A structural assessment of the concrete encasement has been performed and abandonment recommended (ref.: SRT-MTS-94-2008 dated 23 March 1994, EPD-SE-94-0114 dated 04 May 1994, and HLW-HLE-94-0358 dated 08 June 1994).

These lines have not been used for waste transfers in several years, and F-Area Tank Farm management has no future plans to use the lines for either routine or emergency waste transfer operations. Currently, no field work is associated with this abandonment action.

If you need additional information, please let me know.

OPTIONAL FORM 99 (7-90)

FAX TRANSMITTAL # of pages ▶ 1

To Chuck Hayes	From T. Winelus
Dept./Agency	Phone # 8-1537
Fax # 5-4676	Fax # 8-8091

NSN 7540-01-317-7368 5099-101 GENERAL SERVICES ADMINISTRATION

Did we every tell the state?

HLW-HLE-94-0375

HLWE OPEN TECHNICAL ISSUE HLE-TI-94-01
ACTION PLAN

Title: INVESTIGATION OF ENCASEMENT DEGRADATION
OF TYPE I WASTE TRANSFER LINES

Revision: 0

Date: January 7, 1994

Approvals:

Mazen Shurrab Date: 1/12/94
M. S. Shurrab, HLWE Contact

J. E. Marra Date: 1/12/94
J. E. Marra, HLW Engineering Support Manager

Date: 1-12-94
M. S. Peters, HLWE F-Area & Surveillance Engineering Manager

M E Maryak Date: 1/12/94
M. E. Maryak, E&PD Civil/Structural Engineering Manager

Date: 1-13-94
N. C. Iyer, SRTC Materials Application & Corrosion Technology Manager

G. L. Davis Date: 1-12-94
G. Davis, HLWO Facility Manager

INTER-OFFICE MEMORANDUM
WESTINGHOUSE SAVANNAH RIVER COMPANY

HLW-HLE-94-0375

January 7, 1994

To: J. E. Marra

From: M. S. Shurrab

ACTION PLAN: INVESTIGATION OF ENCASEMENT DEGRADATION OF TYPE I WASTE TRANSFER LINES

DESCRIPTION OF ISSUE

The concrete encasement of the waste transfer lines for type I waste tanks 1-8 in the F-Area tank farm is inspected by HLWE using a remote visual imaging instrument, once every two years. On November 12, 1993, the concrete encasement and transfer lines were inspected via port ERIP-5F. Preliminary evaluation indicated that the C1 concrete cover plate (north of ERIP-5F port) had cracked and slumped. It is unknown how long this condition has existed, since previously a mastic caulking had blocked the view of the cover. The collapse of the concrete encasement could jeopardize the integrity of the transfer lines inside the concrete encasement. Furthermore collapse of the cover slabs of the concrete encasement could jeopardize the integrity of the waste transfer lines located above the concrete encasement.

Some immediate actions have already been completed. Completed actions are noted in the list of itemized actions below.

BACKGROUND

1. Mastic caulking between covers is failing and thus contributing to ingress of water into the concrete encasement.

2. The cracked concrete cover is below a "rip-rap" covered earthen bank which may create an external load greater than the design strength limits of the concrete cover.

3. Ingress of water throughout the encasement system indicates that the waterproofing membrane and the cement plaster covering the concrete encasement have failed.

3. Catch tank for tanks 1-8 concrete encasement is monitored every month. There was no unusual change in the tank level for the last 18-24 month.

4. Photographs made between 1986 and 1993 did not show the C1 cover slab because the premolded seal between C1 and C2 covers had dropped and blocked the view. photographs made in 1986 reveal the seal had not dropped and the photographs show the concrete was not slumped.

5. The C1 cover slab has cracked and slumped.

6. The C1 cover is the only observed case where the concrete has slumped. Several other concrete slabs are visible in photographs taken through the ERIP-5F and ERIP-6F ports. The other slabs which are visible have not slumped onto the transfer lines. There is no indication at this time that the cause of this failure will occur at other Type I encasement locations. Thus no immediate actions are planned for other Type I Line Encasement locations.

OBJECTIVE OF ACTION PLAN

The purpose of this action plan is the following:

- Identify immediate actions to stabilize the C1 cover slab;
- Evaluate loading conditions around and above the C1 cover slab;
- Evaluate consequences of the collapse of the C1 cover slab;
- Evaluate the remaining longevity of the C1 cover slab;
- Develop a long-term program to prevent further degradation of the C1 cover slab;
- Identify compensatory actions with regard to all Type I encasements.

DISCUSSION OF RESOLUTION

These actions will result in a program to stabilize the C1 cover slab and minimize possible degradation of other Type I encasements. The resultant program will include, if needed, inspections to verify degradation at critical encasement locations. The resultant program will also include development of any new equipment that is needed for future inspections.

ITEMIZED ACTIONS

1. HLWE Surveillance and Monitoring Group to obtain photographs of the internal surface of the concrete encasement, under the C1 cover via ERIP-5F port. (Completed: 11/12/93, F. G. McNatt)

2. HLWO to restrict the access (20 ft. radius) and prohibit heavy loads, excavations, vibrations, vehicles to the area above the concrete encasement. (Completed: 12/7/93, W. A. Morrison)

3. HLWO to cover catch tank excavation to prevent rain water intrusion. (Completed: 12/9/93, K. D. Harp)

4. HLWO to dike and cover area above the C1 cover slab to redirect rain water run-off away from rock embankment. (Completed: 12/9/93, K. D. Harp)

5. HLWE to locate design drawings of the cover and concrete encasement. (Completed: 11/21/93, M. S. Shurrab)

6. HLWE and MTS to perform a walk down around the area of the concrete encasement, above the C1 cover to evaluate the existing loads and possibly the history of load changes above the cover. (Completed: 12/10/93, M. S. Shurrab and B. J. Wiersma)

7. HLWE to perform monthly monitoring of the catch tank level. (R. E. Nordstrom lead, start 12/31/93)

8. HLWE to review the possibility to perform monthly monitoring of the catch tank level in the H-Area tank farm. (M. S. Shurrab lead, completion by 1/14/94)

9. HLWE Surveillance and Monitoring Group to schedule periodic follow-up inspections on 2/94, 5/94, and 11/94. (F. G. McNatt lead, completion by 1/14/94).

10. HLWE Surveillance and Monitoring group to perform further inspection for gross collapse between port ERIP-5F and port ERIP-6F. (F. G. McNatt lead, completion by 1/14/94).

11. HLWE to map locations of other Type I encasements. (M. S. Shurrab lead, completion by 1/21/94)

12. HLWE and SE to identify other Type I sites that are probable locations for concern. (M. S. Shurrab lead, completion by 1/21/94)

13. HLWE to review the possibility for sampling the 24-H catch tank in the H-Area tank farm. (M. S. Shurrab lead, completion by 1/14/94)

14. HLWO to obtain water sample from catch tank, 241-F. (R. E. Nordstrom and K. D. Harp lead, completion by 1/21/94)

15. HLWE, MTS, and SE to review available drawings and photographs to evaluate the present structural integrity of the C1 encasement. (M. S. Shurrab lead, completion by 1/21/94)

16. MTS to evaluate possible corrosion (water, mastic caulking, etc.) of the transfer lines inside the degraded concrete encasement. (B. J. Wiersma lead, completion by 2/28/94)
17. Identify existing inspection equipment that can be used. (F. G. McNatt lead, completion by 1/21/94)

18. Identify short-term actions (such as prohibit heavy loads, vehicle, and excavations) for other concrete encasement sites. (M. S. Shurrab lead, completion by 1/21/94)

19. HLWE to complete a USQD on the condition of the concrete encasement. (R. E. Nordstrom lead, completion by 2/15/94)

20. HLWE, MTS, and SE to recommend a periodic monitoring frequency for the cracked cover. (M. S. Shurrab lead, completion by 2/28/94)

21. HLWE, MTS, and SE to recommend a possible solution for problem to prevent the collapse of the C1 cover slab over the transfer lines. (M. S. Shurrab lead, completion by 2/28/94)

22. Identify future inspection equipment requiring development. (F. G. McNatt lead, completion by 2/28/94)

23. Identify long-term actions for other concrete encasement sites. (M. S. Shurrab lead, completion by 3/31/94)

24. Identify what concrete encasements need future inspection. (M. S. Shurrab lead, completion by 3/31/94)

Distribution: T. M. Monahon, 703-H
C. Messick, 241-103F
V. G. Dickert, 703-H
G. Davis, 241-100F
R. W. Wilson, 707-H
B. Lewis, 703-H
J. E. Marra, 703-H
M. E. Maryak, 730-B
M. S. Peters, 241-100F
D. M. Barnes, 703-9C
T. B. Caldwell, 707-H
M. A. Ceravolo, 707-H
V. Cech, 740-11A
J. R. Chandler, 703-H
C. D. Cowfer, 707-35B
H. E. Flanders, 707-49B
B. R. Hess, 241-102F
T. W. Houston, 730-B
I. D. Hill, 305-1A
N. C. Iyer, 773-A
B. L. Lewis, 703-8C
M. W. Loibl, 305-1A
F. G. McNatt, 704-8H
W. A. Morrison, 241-100F
R. E. Nordstrom, 241-102F
R. Ostrowski, 707-35B
R. L. Salizzoni, 707-H
R. L. Sindelar, 773-42A
M. S. Shurrab, 703-H
J. H. Thompson, 703-H
B. J. Wiersma, 773-A, D-1145
HLWE Files, 703-H
Code: WM 500.15

OSR 3-4A-W (Rev1-89)

WESTINGHOUSE SAVANNAH RIVER COMPANY

INTER-OFFICE MEMORANDUM

ESH-CGP-97-0161

May 21, 1997

TO: R. M. CAMPBELL, 719-4A

FROM: C. R. HAYES, 742-A

SCDHEC MODIFICATION TO CONSTRUCTION PERMIT #17424-IW; HIGH LEVEL WASTE TANK 50 VALVE BOX ADDITION (U)

Attached is a copy of the SCDHEC letter approving the modification to SCDHEC Construction Permit #17424-IW to allow construction of a valve box and necessary appurtenances adjacent to High Level Waste Tank 50. Please contact me upon construction completion and prior to placement into service to schedule an inspection.

Also, please be aware that Section IX.B.2 (b) of the SRS Federal Facility Agreement requires an assessment report to be submitted to EPA and SCDHEC for installation of new or replacement tank system components. The report is due on March 9, 1998.

Please contact me if there are any questions.

CRH:aeo
Attachment*

cc: D. T. Bignell, 742-A
J. W. Cook, 742-A
J. W. French, 703-H
A. R. Gough, 730-B
A. B. Gould, 703-A*
H. M. Handfinger, 703-H
G. S. Hoover, 703-A
T. J. Lex, 719-4A
S. Marra, 703-H
R. M. Satterfield, 719-4A
G. E. Turner, 703-A
EPD Fileroom, 742-A
Records Processing, 773-52A*

D H E C
PROMOTE PROTECT PROSPER
2600 Bull Street
Columbia, SC 29201-1708

RECEIVED
MAY 20 1997

May 15, 1997

Mr. J.W. Cook
CERCLA, Geological and Permitting Section
Environmental Protection Department
Westinghouse Savannah River Company
P.O. Box 616
Aiken, SC 29802

Re: SRS/F&H Area HLW Tank Modification
Construction Permit #17,424-IW
Aiken County

Dear Mr. Cook:

This Office has reviewed your May 6, 1997 submittal for the modification of Construction Permit #17,424-IW for the F/H Area High Level Waste Tank Farm. A stainless steel valve box will be constructed west of Tank 50 to serve as a diversion mechanism for flow originating at the F/H Effluent Treatment Facility and for ITP filtrate. Approximately 300 linear feet of 2, 3 and 4 inch diameter core piping, and 6 inch diameter jacket piping, associated piping, valves and appurtenances will be installed to reroute the flows. The addition of this equipment is hereby approved. This letter shall serve as a modification to Construction Permit #17,424-IW.

If you should have any questions feel free to call me at (803) 734-4393.

Sincerely,

Christina Hackett

Christina Hackett
Environmental Engineer Associate
Industrial, Agricultural, and Storm Water
Permitting Division

cc: Lower Savannah EQC District

D H E C

PROMOTE PROTECT PROSPER

South Carolina Department of Health and Environmental Control

Industrial, Agricultural, and
Storm Water Permitting Division
2600 Bull Street
Columbia, SC 29201

FAX MESSAGE

Date: May 14, 1997

Number of Pages Including Cover Sheet: 2

Please Deliver This Fax Message

TO: Chuck Hayes
Name

SRS/EPD
Organization/Department

(803)725-4676
Fax Number

(803)725-8838
Office Phone

FROM: Christina Hackett
Name

Federal/Energy/Pretreatment
Section

(803) 734-5593
Fax Number

(803) 734-4393
Office Phone

SUBJECT/COMMENTS: Let me know if you have any comments. Thanks.

P.S. Nothing like backing into the SEC Baseball Tournament!

2

D H E C
PROMOTE PROTECT PROSPER
2600 Bull Street
Columbia, SC 29201-1708

May 14, 1997

Mr. J.W. Cook
CERCLA, Geological and Permitting Section
Environmental Protection Department
Westinghouse Savannah River Company
P.O. Box 616
Aiken, SC 29802

Re: SRS/F&H Area HLW Tank Modification
Construction Permit #17,424-IW
Aiken County

Dear Mr. Cook:

This Office has reviewed your May 6, 199[illegible] submitt[illegible] for [illegible]cation of Construction Permit #17,424-IW for the F/H Area Hi[illegible] Level [illegible]aste Ta[illegible]n. A stainless steel valve box will be constructed west of Tank 50[illegible]erve as [illegible] diversion [illegible]echanism for flow originating at the F/H Effluent Treatment Facility a[illegible]or ITP [illegible]rate. Ap[illegible]ximately 300 linear feet of 2, 3 and 4 inch diameter core piping, and 6[illegible]ch diam[illegible]acket [illegible]ing, associated piping, valves and appurtenanc[illegible] will be insta[illegible] [illegible]reroute t[illegible] [illegible]he addition of this equipment is hereby approved [illegible]etter sh[illegible] a modi[illegible] to Construction Permit #17,424-IW.

If you shoul[illegible] questio[illegible]e to call me at (803) 734-4393.

Sincerely,

C[illegible]tina Hackett
[illegible]nmental Eng[illegible]er Associate
[illegible]ural, and Storm Water
P[illegible]ision

cc: Lower Savannah EQC District

draft

Lotus cc:Mail for Rm Campbell

Author: Rm Campbell at SRCCA02
Date: 5/12/97 11:35
TO: Chuck Hayes
CC: Deepak Bhasin at SRCCB02
CC: Harvey Handfinger at SRCCH04
CC: Sharon Marra at SRCCH12
CC: Marshall Miller at SRCCH10
CC: Maria Rios-Armstrong at SRCCH05
CC: Rodney Satterfield at SRCCA17
Subject: HLW Salt Processing Flowsheet Changes

When you return from delivering the originals of the stamped preliminary drawings related to the flowsheet changes (itemized below) to Melinda Vickers and Christine Hackett with DHEC, I will have three copies each of these drawings ready for your distribution.

With your delivery today, I understand that Ms. Hackett and Ms. Vickers have everything they need and are still on schedule for approving the permit modification package by the 15th of May.

Please let me know how you visit went today.

Ron (pager 12796)

Stamped Drawings:

Tank 50 Valve Box and Leak Detection System (P-PA-H-8582)
LWF Water Filtrate to Tk-50 Piping Plan (P-PA-H-8574)
Tank 50 Valve Box Piping Diagram (M-M6-H-9815)
Tank 50 Valve Box Details Process (P-PJ-H-7973)
Tank 50 Valve Box Details Process (P-PJ-H-7976)
Tank 50 Valve Box Details Process (C-CM-H-6643)
Tank 50 Valve Box and Leak Detection System (P-PA-H-8583)*

Notes:
*-This drawing was not included in the original submittal to DHEC. The Valve Box Concrete Foundation Drawing (C-CC-H-7996) was removed from the permit modification package as you requested.

cc:Mail for: Chuck Hayes

Subject: Tank 50 Valve Box
From: Rm Campbell 5/8/97 3:19 PM
To: Harvey Handfinger at SRCCH04
cc: Deepak Bhasin at SRCCB02
cc: Kim Cauthen at SRCCH07
cc: Bharat Damani at SRCCH29
cc: Arthur Greer at SRCCH18
cc: Chuck Hayes
cc: Michael02 Johnson at SRCCH01
cc: Gary Marozas at SRCCH18
cc: Sharon Marra at SRCCH12
cc: Marshall Miller at SRCCH10
cc: Cary Milliner at SRCCH11
cc: Maria Rios-Armstrong at SRCCH05
cc: Rodney Satterfield at SRCCA17
cc: Walter Schuler at SRCCB06
cc: Jim Wright at SRCCC04

Today, EPD informed the HLW Environmental Compliance group that SCDHEC had agreed that the Tank 50 Valve Box mud mat could be installed and the concrete foundation poured. However, the Valve Box walls and cover cannot be erected on the foundation until the permit modification package has been approved by SCDHEC.

If you have any questions, please page me at 12796.

cc:Mail for: Chuck Hayes

Subject: Re: The High level salt processing flow sheet changes
From: Sharon Marra at SRCCH12 5/7/97 1:27 PM
To: Bharat Damani at SRCCH29
To: Kim Cauthen at SRCCH07
cc: Chuck Hayes at SRCCA02
cc: Anatia Whittenburg
cc: Rodney Satterfield at SRCCA17

The waste feed characterization for these feeds has not changed. The ratio may be different but it has been for saltstone anyway so they have mostly been running ETF material.

I'm not sure I understand the LDR comment. We do not believe that the benzene rates are going up in Saltstone. However, as more data becomes available we can evaluate. In addition, this comment does not affect our package.

As far as the RPA - again it doesn't affect this package and the feed is not changing anyway.

I suggest maybe we get together internally to discuss this whole process to make sure that we all have the same understanding of where things stand.

Chuck: I don't feel that this comments impact anything that was sent to DHEC. Thanks for your continued support in getting that package approved.

Thanks.

Subject: The High level salt processing flow sheet changes
From: Bharat Damani at SRCCH29
Date: 5/7/97 11:54 AM

I have done a quick reveiwe on the High level salt processing flowsheet changes and the material specification prepared for SCDHEC approval for the modification to the various permits. I have following comments.

The changes in the Z area waste feed characterization due to benzene or other organics, the change in the mix ratio of the ETF bottoms and the ITP decon salt solution, the flow rate and possible other changes to the existing permit application may have to be covered in some fashion.

An evaluation for LDR treatment standards Notification and Certification for Benzene level must be performed and assessed. This is as per the requirements of 40 CFR 268.9 (d) for taking in to account any changes in the Subtitle D facility receiving the waste.

Separately, not as the part of this permit mod, but we may have to think about need for updating the Z area RPA based on any changes in the waste feed characterization.

Thanks!

cc:Mail for: Chuck Hayes

Subject: Tank 50 Valve Box Foundation (U) -Reply
From: HACKETCL@columb32.dhec.state.sc.us at Mailhub 5/8/97 10:39 AM
bcc: CHUCK HAYES at SRCCA02
To: chuck.hayes at Mailhub

Chuck,

Sorry that I didn't get back to you yesterday, but I thought that Melinda had replied to you. There's no problem with pouring the concrete foundation for the valve box as long as you understand that it is at your own risk, and that none of the piping is installed. I've reviewed the plans that were sent in, and everything looks fine. I'll be waiting on the stamped plans next week.

Thanks,
Christina

BBC
File
1

Westinghouse
Savannah River Company

P.O. Box 616
Aiken, SC 29802

ESH-CGP-97-0147

May 5, 1997

Mr. M. F. Sadler, Director
Industrial, Agricultural & Stormwater Permitting Division
South Carolina Department of Health and
Environmental Control
2600 Bull Street
Columbia, South Carolina 29201

Dear Mr. Sadler:

CONSTRUCTION PERMIT #17424-IW MODIFICATION; VALVE BOX INSTALLATION NEAR HIGH LEVEL WASTE TANK 50 (U)

Attached for your review and approval are plans and specifications for installation of a valve box, transfer piping and other necessary appurtenances adjacent to High Level Waste (HLW) Tank 50. Approximately 300 feet of 2-4 inch diameter core and 6 inch diameter jacket piping, in addition to the stainless steel valve box will be constructed immediately west of Tank 50.

This modification is necessary to more effectively control the higher than expected benzene generation rates that have occurred since ITP startup in late 1995. The changes will result in revisions to the existing HLW salt processing flowsheet and re-designation of tank usage. Because of the need to provide an inert atmosphere within tanks that may contain benzene, Tank 22 will be replaced by Tank 50 as the ITP spent washwater storage vessel. It is not practical to provide an inerting system in Tank 22, which is a Type IV tank. Further, this will require addition of a valve box to replace the function of Tank 50 as the Saltstone feed tank. The valve box will serve as a diversion mechanism for flow originating at the F/H Effluent Treatment Facility and for ITP filtrate.

This matter has been discussed between Chuck Hayes and Melinda Vickers. If there are any questions, please contact Mr. Hayes (803/725-8838).

Yours very truly,

JWCook

J. W. Cook, Manager
CERCLA, Geological and Permitting Section
Environmental Protection Department

CRH:aeo
Attachment*

cc: M. C. Reece, SCDHEC, Lower Savannah District
A. B. Gould, 703-A

Letter, M. F. Sadler from J. W. Cook
ESH-CGP-97-0147, May 5, 1997

bcc: D. Bhasin, 730-1B
D. T. Bignell, 742-A
R. M. Campbell, 719-4A
C. R. Hayes, 742-A*
G. S. Hoover, 703-A
J. W. French, 703-H
S. L. Marra, 703-H
R. M. Satterfield, 719-4A
G. E. Turner, 703-A
EPD Fileroom, 742-A
Records Processing, 773-52A*

FedEx

Tracking Number 2920827700

Sender's Copy

2302 89 00 536/ 00630

1 From (please print)

Date 5/5/97 Sender's FedEx Account Number 1515-2696-9

Sender's Name Mr. John W. Cook Phone (803) 725-3110

Dept./Floor/Suite/Room

Company WESTINGHOUSE SAVANNAH RIVER CO

Address 773/51A MAILROOM

City AIKEN State SC Zip 29808

2 Your Internal Billing Reference Information (Optional) (First 24 characters will appear on invoice)

3 To (please print)

Recipient's Name Mr. M. F. Sadler Phone (803) 734-5253

Dept./Floor/Suite/Room

Company South Carolina Department of Health and Environmental Control

Address 2600 Bull Street
(To "HOLD" at FedEx location, print FedEx address here) (We Cannot Deliver to P.O. Boxes or P.O. Zip Codes)

City Columbia State SC Zip 29201

For HOLD at FedEx Location check here
☐ Hold Weekday (Not available with FedEx First Overnight)
☐ Hold Saturday (Not available at all locations) (Not available with FedEx First Overnight or FedEx Standard Overnight)

For Saturday Delivery check here
☐ (Extra Charge. Not available to all locations) (Not available with FedEx First Overnight or FedEx Standard Overnight)

Service Conditions, Declared Value, and Limit of Liability – By using this Airbill, you agree to the service conditions in our current Service Guide or U.S. Government Service Guide. Both are available on request. SEE BACK OF SENDER'S COPY OF THIS AIRBILL FOR INFORMATION AND ADDITIONAL TERMS. We will not be responsible for any claim in excess of $100 per package whether the result of loss, damage, or delay, non-delivery, misdelivery, or misinformation, unless you declare a higher value, pay an additional charge, and document your actual loss in a timely manner. Your right to recover from us for any loss includes intrinsic value of the package, loss of sales, interest, profit, attorney's fees, costs, and other forms of damage, whether direct, incidental, consequential, or special, and is limited to the greater of $100 or the declared value but cannot exceed actual documented loss. The maximum declared value for any FedEx Letter and FedEx Pak is $500. Federal Express may, upon your request, and with some limitations, refund all transportation charges paid. **See the FedEx Service Guide for further details.**

Questions?
Call 1·800·Go·FedEx (1-800-463-3339)

4a Express Package Service *Packages under 150 lbs.* Delivery commitment may be later in some areas.

☒ FedEx Priority Overnight (Next business morning)
☐ FedEx Standard Overnight (Next business afternoon)
☐ FedEx 2Day* (Second business day)
☐ NEW FedEx First Overnight (Earliest next business morning delivery to select locations) (Higher rates apply)

* FedEx Letter Rate not available. Minimum charge: One pound FedEx 2Day rate.

4b Express Freight Service *Packages over 150 lbs.* Delivery commitment may be later in some areas.

☐ FedEx Overnight Freight (Next business-day service for any distance)
☐ FedEx 2Day Freight (Second business day service for any distance)
☐ FedEx Express Saver Freight (Up to 3 business-day service based upon distance)

(Call for delivery schedule. See back for detailed descriptions of freight products.)

5 Packaging ☐ FedEx Letter ☐ FedEx Pak (Declared value limit $500) ☒ FedEx Box ☐ FedEx Tube ☐ Other Pkg.

6 Special Handling
Does this shipment contain dangerous goods? ☐ Yes (As per attached Shipper's Declaration) ☐ Yes (Shipper's Declaration not required)
☐ Dry Ice — Dry Ice, 9, UN 1845 III x kg. 904 (Dangerous Goods Shipper's Declaration not required)
CA ☐ Cargo Aircraft Only

7 Payment
Bill to: ☒ Sender (Account no. in section 1 will be billed) ☐ Recipient ☐ Third Party ☐ Credit Card ☐ Cash/Check
(Enter FedEx account no. or Credit Card no. below)

FedEx Account No. QE200
Credit Card No. Exp. Date

Total Packages	Total Weight	Total Declared Value*	Total Charges
		$ .00	$

* When declaring a value higher than $100 per shipment, you pay an additional charge. See **SERVICE CONDITIONS, DECLARED VALUE AND LIMIT OF LIABILITY** section for further information.

8 Release Signature *Sign to authorize delivery without obtaining signature.*

Your signature authorizes Federal Express to deliver this shipment without obtaining a signature and agrees to indemnify and hold harmless Federal Express from any resulting claims.

272

Rev. Date 5/96
PART #147956
©1994-96 FedEx
PRINTED IN U.S.A.

HIGH LEVEL SYSTEM
SALT PROCESSING
FLOWSHEET CHANGES

INDEX

Tab:	Description:
1	Process Description High Level Waste Salt Processing Flowsheet Changes
2	Specifications: Piping and Valve Box
3	Preliminary Drawings with Legend:

Valve Box & Leak Detection System Process Piping Plan (P-PA-H-8582)
LWF Water Filtrate to Tk 50 (P-PA-H-8574)
Piping Diagram (M-M6-H-9815)
Valve Box Concrete Foundation (C-CC-H-7996)
Valve Box Piping Assembly (P-PJ-H-7973)
Valve Box Details (P-PJ-H-7976)
Valve Box Details (C-CM-H-6643)

PROCESS DESCRIPTION
HIGH LEVEL WASTE
SALT PROCESSING FLOWSHEET CHANGES

A. High Level Waste System Function

A1. The mission of the High Level Waste (HLW) System is to receive and store the Savannah River Site high-level radioactive wastes in a safe and environmentally sound manner, and to convert theses wastes into forms suitable for final disposal. The planned forms are (1) borosilicate glass produced at the Defense Waste Processing Facility to be sent to a federal repository, (2) saltstone, a cement-like material, produced at the Saltstone Production Facility and disposed of on site, and (3) treated wastewater to be released pursuant to the National Pollution Discharge Elimination System permit requirements.

B. Existing In-Tank Precipitation Description

B1. Principal Facilities. A summary of the principal tanks and buildings of the ITP Facility, as this component of the HLW System is presently configured, are as follows:

B1.1. Tank 48. Dissolved salt solution from the H-Area and F-Area tanks is reacted with special chemicals to form a radioactive precipitate slurry.

B1.2. Filter and Stripper Building. The radioactive precipitate slurry from Tank 48 is separated into a high-activity precipitate, and a low-activity decontaminated supernate by filtration. The Stripper equipment within this building strips the low-activity filtrate of benzene. Filtrate Hold Tanks within the building collect the wash water and filtrate, which is then transferred to Tank 22 (wash water) and to Tank 50 (filtrate).

B1.3. Tank 49. Washed precipitate from Tank 48 is stored in Tank 49. This tank serves as the precipitate feed tank for the Late Wash Facility which leads to the Defense Waste Processing Facility.

B1.4. Tank 50. This tank stores the stripped decontaminated supernate. It also receives the low level radioactive Evaporator bottoms waste from the Effluent Treatment Facility. This tank is the feed tank for waste going to the Saltstone Production Facility for further processing.

B1.5. Tank 22. This tank stores spent wash water from the ITP and Late Wash Facility filtration process. The water would be reused in the Tank 48 process.

C. Proposed High Level Waste Process Flowsheet Changes

C1. Purpose for Changes. The High Level Waste (HLW) process flowsheet changes result from higher than expected benzene generation rates that occurred during

testing of the ITP facilities in late 1995. Task teams were formed to review the existing flowsheet and chemistry involved in the precipitation process. The modifications discussed herein are based on the recommendations arising from the findings of these task teams, and have been approved for implementation by HLW Management. Further, these modifications are consistent with recommendations of the Defense Nuclear Facility Safety Board as contained in DNFSB Recommendation 96-1. These modifications will result in revisions to the existing process which will change the use of certain tanks, and modify the pathways by which certain waste streams will be transferred to the Saltstone Manufacturing Facility for further processing. To best facilitate these modifications, a new Valve Box will be constructed near Tank 50 (referred to as the Valve Box) to serve as a diversion box as well as housing for transfer piping jumpers and valves.

C2. Major Modifications. The major modifications, in brief, are as follows:

* Construction of a Tank 50 Valve Box and necessary piping, jumpers, and other appurtenances.

* Transfer path rerouting from the Effluent Treatment Facility to the Saltstone Production Facility.

* Transfer path rerouting from ITP Stripper Builder Filtrate Hold Tanks to Tank 50.

* Change in use of Tank 50, a Type IIIA tank.

* Elimination of Tank 22, a Type IV tank, from ITP Process.

C3. New Tank 50 Valve Box

C3.1. Description of New Valve Box. The Tank 50 Valve Box, to be located west of Tank 50, will consist of walls constructed of 1/4 inch stainless steel plates encapsulating lead shot fill material for protection against radiation. The Valve Box will be approximately 16 feet long by 3 feet wide by 5 feet deep, and will rest on an eighteen (18) inch thick reinforced concrete slab with a 5/16 inch thick stainless steel plate on the top surface of the slab. The top of this concrete slab will be sloped for drainage into a leak detection box system. The Valve Box cover (2.5 inches thick including shielding) is also constructed of stainless steel plates encapsulating lead pour material for shielding purposes. The top of the box may protrude slightly above the finished grade by approximately four inches.

C3.2. Flowpaths Into and Out of the Tank 50 Valve Box. The Tank 50 Valve Box will permit multiple flowpaths between tanks and other facilities simultaneously. Filtrate from the In-Tank Precipitation (ITP) process will now go through the Valve Box to the Saltstone Production Facility. Spent washwater from ITP will be transferred to and from Tank 50 through the use of this Valve Box. The Effluent Treatment Facility line originally going to Tank 50 will be cut and spliced into the new

Valve Box to allow the ETF concentrate waste to be piped directly to the Saltstone Production Facility. The new waste transfer lines will total approximately three hundred feet, and will consist primarily of two (2") inch to four (4") inch stainless steel line inside a six (6") inch carbon steel jacket. The core lines will meet the pipe stress requirements of the ASME B31.3 Code. Attached to this report are drawings depicting the current and proposed High Level Waste Salt Processing Flowsheet, Tank 50 Valve Box details, and the various flow paths before and after construction of the new Valve Box.

C3.3. Tank 22. Originally, spent washwater from the Filtrate Hold Tanks went to Tank 22. With Tank 22 no longer a part of the ITP process, this spent washwater will now be directed from the Stripper Building through the new Valve Box for transfer on to Tank 50. This Type IV tank is being removed from the ITP Process Flowsheet principally due to the impracticality of providing it with an inerting system that would allow the safe storage of waste that may contain benzene.

C3.4. Filtrate from Hold Tanks. The filtrate from the Stripper Building Filtrate Hold Tanks will now go directly to the Saltstone Production Facility by transfer through the new Valve Box. Originally this filtrate went into Tank 50 where it was then transferred to the Saltstone Production Facility.

C3.5. Spent Washwater. The spent washwater from the Defense Waste Processing Facility originally returned to Tank 22 of the ITP Facility by way of the Latewash Facility. Now, this spent washwater will continue to return through the Latewash Facility, however, it will then go directly to Tank 50. From Tank 50, this spent washwater can be recycled again through the Filter/Stripper Building by way of the new Tank 50 Valve Box.

C4. Safety Features Incorporated Into The Tank 50 Valve Box

C4.1. Leak Detection. As described above, the new Valve Box will be lined with stainless steel plates to form a watertight secondary containment vessel in the event of a leak inside the structure. Any such leakage will be detected by a dual conductivity probe system located inside the Valve Box. The floor of the Valve Box (top of the concrete slab) is sloped to drain any leakage into a leak detection box. The leakage into this detection sump would then be transferred to Tank 50 by way of a gravity drain header.

C4.2. Radiation Protection. For radiation protection to the employees, the Valve Box walls and top are insulated with lead fill material sandwiched between stainless steel plates. The floor of the box which is the top of the concrete slab also contains a stainless steel liner. All steel plate seams are welded to form a watertight structure. The structure will be entirely underground when construction is completed.

C5. Proposed F/H Effluent Treatment Facility Modifications

C5.1. Flowpath Changes. The flowpath out of the Effluent Treatment Facility (ETF) will be modified to run through the new Tank 50 Valve Box. Currently, wastewater from ETF destined for the Saltstone Production Facility goes through Tank 50. Upon completion of the new Valve Box, the wastewater will now be routed through the Valve Box and go directly to the Saltstone facility. The existing pipeline from ETF to Tank 50 will be cut and spliced into the new Valve Box. The portion of the existing line going to Tank 50 will be utilized to provide a gravity drain for any leakages into the new Valve Box, and new low point drains added by the routing of existing waste transfer lines.

C5.2. Emergency Transfer Facilities and Capabilities. The connection between the ETF and the Tank 50 Valve Box will serve as the primary pathway for transferring wastewater from ETF to Saltstone. In the event a transfer from this pathway cannot take place for any reason, ETF will have one other way to transfer wastewater out of ETF. Though complex and difficult to accomplish, wastewater could be routed in case of emergency through Diversion Box 8 to Diversion Box 7, then to Tank 43, where it would thereafter re-enter the H-Area Tank Farm's Evaporator facility. If a transfer of wastewater from ETF is necessary after the line to Tank 50 has been severed, but before the Valve Box has been completed, then such a transfer through Tank 43 to the Evaporator may be performed as a part of normal operations.

C6. Proposed High Level Waste System Modifications

C6.1. Tank 22 Removal from ITP Process. Tank 22 will be removed the In-Tank Precipitation process flow sheet where it served to store spent wash water from the ITP and Late Wash filtration process. It would not be feasible to provide this Type IV waste tank with a nitrogen inerting system that would enable it to safely store wastewater that may contain benzene. Therefore, Tank 50 will be modified to accept the spent wash water.

C6.2. Tank 50 Change in Use. Tank 50 is a 1.3 million gallon Type IIIA primary tank which is contained within a carbon steel tank for secondary containment purposes. Its original use was to receive decontaminated filtrate from the ITP process and the waste concentrate from the ETF process. Under the new modifications to the HLW Flow Sheet, this tank will now be used to store spent wash water. Waste from Tank 50 will be routed through the new Tank 50 Valve Box for transferral to the Saltstone Production Facility.

D. Existing Permit Considerations

D1. Wastewater Treatment Facility Permit

D1.1. ITP and HTF. The proposed modifications to the HLW Flow Sheet will not change the existing permit conditions or requirements for ITP or the H-Area Tank Farm under the current Wastewater Treatment Facility Permit. The modifications to the

waste transfer routes and the changes in use of particular tanks are part of the normal operations of the facilities to allow for the continuous treatment and removal of the waste. Further, these modifications will not change either the quantity or the quality of the effluent waste streams.

D1.2. ETF Waste Concentrate Flow Route. As originally permitted, the ETF waste concentrate normally flowed from the ETF through an existing ETF valve box to Tank 50 when such waste was suitable for processing at the Saltstone Production Facility. Under the new modifications, this waste concentrate will go directly to the Saltstone Production Facility by way of the new Tank 50 Valve Box. All recordkeeping requirements and other conditions of the ETF permit for waste transfers will continue to be fully performed as in the past.

D2. Air Quality Permit and Application

D2.1. Air Emissions. The current Bureau of Air Quality Control permit for the H-Area Tank Farm and ITP Facilities will not be impacted by the proposed HLW modifications. These modifications will change the flowpaths of certain waste streams, but do not result in air emissions greater than that allowed in the permit or by agreement with the State of South Carolina. Efforts are ongoing with regard to the potential benzene emissions from the various tanks and facilities under the new HLW flow sheet modifications. As these efforts progress, any changes necessary to the Savannah River Site's Title V Air Permit Application under the Clean Air Act Amendments of 1990 will be promptly transmitted to the Bureau of Air Quality.

D3. Saltstone Production Facility.

D3.1. Saltstone. The modifications to the HLW Flowsheet discussed herein will not change the Saltstone Production Facility's processes for manufacturing the grout which is disposed on-site in concrete vaults. Under the proposed modifications, the Effluent Treatment Facility's concentrate will go through the Tank 50 Valve Box, but not into Tank 50, as it travels to the Saltstone facility. The ITP filtrate will also be transferred to the Saltstone facility by way of this Valve Box. These two waste streams were previously combined in Tank 50 before transferral to the Saltstone Production Facility.

Current HLW Salt Processing Flowsheet

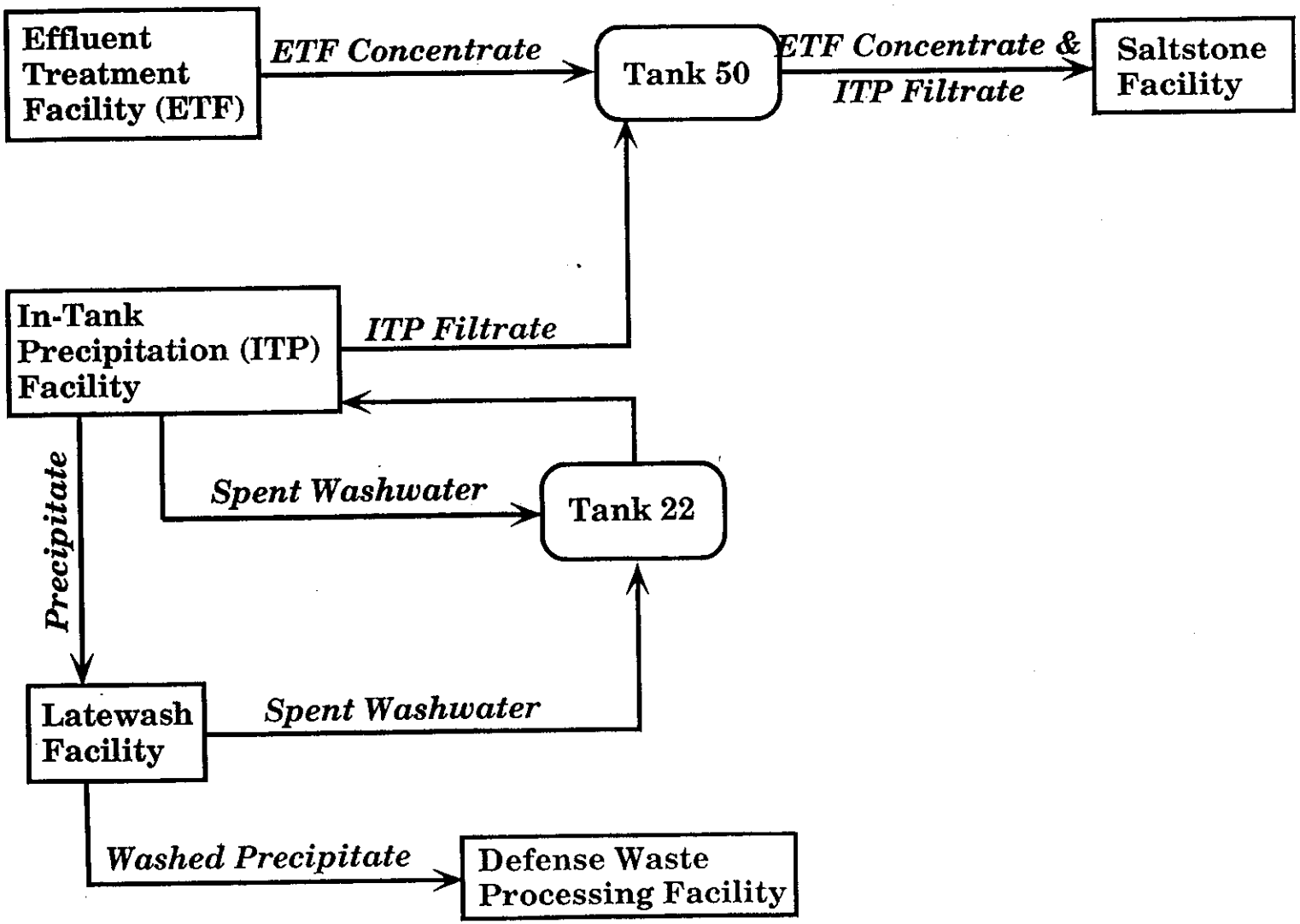

Proposed HLW Salt Processing Flowsheet

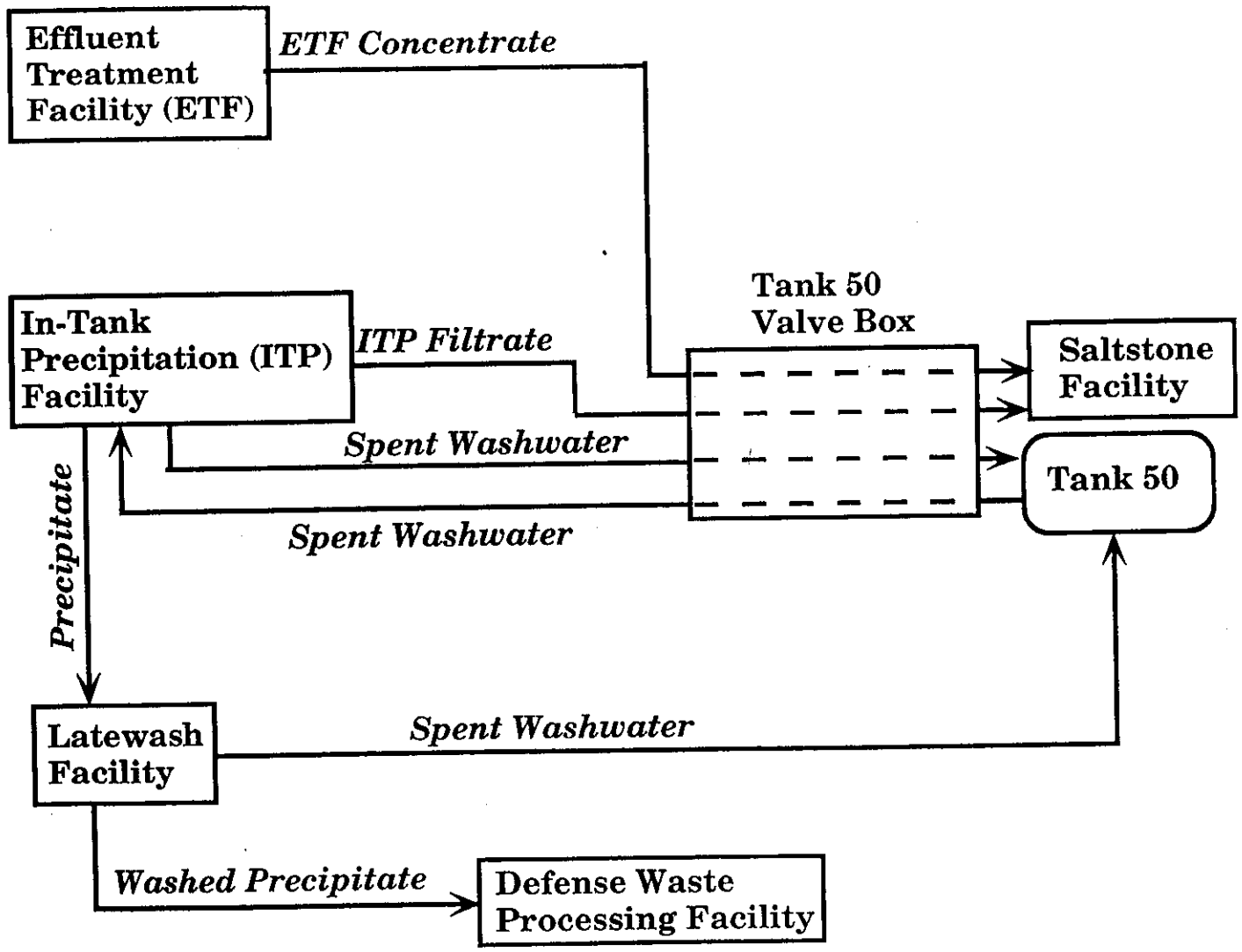

Specifications

Waste transfer piping between the Tank 50 Valve Box and the various tanks and facilities will be constructed primarily from 304L stainless steel, contained inside carbon steel jackets, under the following specifications:

Core Piping-Stainless Steel (SRS Pipe Code PS202C)

- Schedule 40S
- Pipe Diameter: 2 to 4 Inches Type 304L or 304 welded stainless steel pipe
- Basis for Stresses: ANSI/ASME B31.3
- Fluid Service: Category M, Severe Cyclic Conditions
- Design Pressure: 150 psi
- Maximum Test Pressure: 250 psi

Jacket Piping-Carbon Steel (SRS Pipe Code PS101C)

- Schedule 40
- Pipe Diameter: 6 Inches ASTM Specification A106
- Basis for Stresses: ANSI/ASME B31.3
- Fluid Service: Category M
- Design Pressure: 150 psi
- Maximum Test Pressure: 250 psi

SOUTH CAROLINA REGISTERED PROFESSIONAL ENGINEER No. 14203 DEEPAK BHASIN

4/30/97.

Valve Box

Reinforced Concrete Foundation:

- 28 Day Compressive Strength: 3,000 psi
- Reinforcing Steel: ASTM A615, Grade 60, Deformed Bars
- Top surface: 5/16 inch plate-304L stainless steel

Walls:

- Inside/Outside Face: 1/4 inch plate-304L stainless steel
- Shielding: 3½ inches lead fill

Box Cover:

-
- Top/Bottom Face: 1/4 inch plate-304L stainless steel
- Shielding: 2 inches lead pour fill

Valves:

- 3 inch Ball Valve-McCannaseal, Model S303-6L-Z-S6, ANSI Class 300, ASTM SA351-CF3M
- 3 inch Check Valve-Anchor-Darling or equal, ANSI Class 300, ASTM SA351-CF8M

LEGEND
WASTE TRANSFER LINES

Drawing Number:	Facilities Served:	Line No:	Color Code:
P-PA-H-8582	ETF to Tk 50 VB*	6386	[redacted]
P-PA-H-8582	Tk 50 Transfer Pump to TK 50 VB	1905A	[redacted]
P-PA-H-8582	Tk 50 VB to Saltstone	1905A	ORANGE
P-PA-H-8582	Filtrate Hold Tks to C1 Riser Tk 50 via Tk 50 VB*	3059	[redacted]
P-PA-H-8582	Flush Water to Tk 50 VB*	996	PINK
P-PA-H-8574	Late Wash to C1 Riser Tk 50	1663	YELLOW

*- The filtrate will go into Tank 50 initially. When the volume in Tank 50 has been lowered sufficiently, then the filtrate, and the ETF concentrate, will go to Saltstone without going into Tank 50.

ETF - Effluent Treatment Facility
Tk 50 VB - Proposed New Tank 50 Valve Box
Saltstone - Saltstone Production Facility
Late Wash - Late Wash Facility

WESTINGHOUSE SAVANNAH RIVER COMPANY
ENVIRONMENTAL PROTECTION DEPARTMENT
BUILDING 742-A
AIKEN, SC 29808

FAX NUMBER: 803-725-4676

FAX COVER SHEET

NUMBER OF PAGES 7 *(Excluding cover sheet)* DATE 4-29-97

TO:	LOCATION:	FAX NUMBER:	PHONE NUMBER:
MELINDA VICKERS	SCDHEC - COLA.	803/734-5593	803/734-0819

FROM: CHUCK HAYES

PHONE NUMBER: 803/725-8838

COMMENTS...

PLS. CALL & LETS DISCUSS PERMITTING REQUIREMENTS.

SAFETY • RESPONSIBILITY • SECURITY
SRS
SAVANNAH RIVER SITE

Classification
Unclassified

HIGH LEVEL WASTE
PROCESS FLOWSHEET CHANGES

A. High Level Waste System Function

A1. The mission of the High Level Waste (HLW) System is to receive and store the Savannah River Site high-level radioactive wastes in a safe and environmentally sound manner, and to convert theses wastes into forms suitable for final disposal. The planned forms are (1) borosilicate glass produced at the Defense Waste Processing Facility to be sent to a federal repository, (2) saltstone, a cement-like material, produced at the Saltstone Production Facility and disposed of on site, and (3) treated wastewater to be released pursuant to the National Pollution Discharge Elimination System permit requirements.

B. Existing In-Tank Precipitation Description

B1. Principal Facilities. A summary of the principal tanks and buildings of the ITP Facility, as this component of the HLW System is presently configured, are as follows:

B1.1. Tank 48. Dissolved salt solution from the H-Area and F-Area tanks is reacted with special chemicals to form a radioactive precipitate slurry.

B1.2. Filter and Stripper Building. The radioactive precipitate slurry from Tank 48 is separated into a high-activity precipitate, and a low-activity decontaminated supernate by filtration. The Stripper equipment within this building strips the low-activity filtrate of benzene. Filtrate Hold Tanks within the building collect the wash water and filtrate, which is then transferred to Tank 22 (wash water) and to Tank 50 (filtrate).

B1.3. Tank 49. Washed precipitate from Tank 48 is stored in Tank 49. This tank serves as the precipitate feed tank for the Late Wash Facility which leads to the Defense Waste Processing Facility.

B1.4. Tank 50. This tank stores the stripped decontaminated supernate. It also receives the low level radioactive Evaporator bottoms waste from the Effluent Treatment Facility. This tank is the feed tank for waste going to the Saltstone Production Facility for further processing.

B1.5. Tank 22. This tank stores spent wash water from the ITP and Late Wash Facility filtration process. The water would be reused in the Tank 48 process.

C. Proposed High Level Waste Process Flowsheet Changes

C1. Purpose for Changes. The High Level Waste (HLW) process flowsheet changes result from higher than expected benzene generation rates that occurred during testing of the ITP facilities in late 1995. Task teams were formed to review the existing

flowsheet and chemistry involved in the precipitation process. The modifications discussed herein are based on the recommendations arising from the findings of these task teams, and have been approved for implementation by HLW Management. Further, these modifications are consistent with recommendations of the Defense Nuclear Facility Safety Board as contained in DNFSB Recommendation 96-1, copy attached. These modifications will result in revisions to the existing process which will change the use of certain tanks, and modify the pathways by which certain waste streams will be transferred to the Saltstone Manufacturing Facility for further processing. To best facilitate these modifications, a new Valve Box will be constructed near Tank 50 (referred to as the Valve Box) to serve as a diversion box as well as housing for transfer piping jumpers and valves.

C2. Major Modifications. The major modifications, in brief, are as follows:

* Construction of a Tank 50 Valve Box and necessary piping, jumpers, and other appurtenances.

* Transfer path rerouting from the Effluent Treatment Facility to the Saltstone Production Facility.

* Transfer path rerouting from ITP Stripper Builder Filtrate Hold Tanks to Tank 50.

* Change in use of Tank 50, a Type IIIA tank.

* Elimination of Tank 22, a Type ~~IIIA~~ IV tank, from ITP Process.

C3. New Tank 50 Valve Box

C3.1. Description of New Valve Box. The Tank 50 Valve Box, to be located west of Tank 50, will consist of walls and a cover constructed of 1/4 inch stainless steel plates encapsulating lead shot fill material for protection against radiation. The Valve Box will be approximately 16 feet long by 3 feet wide by 5 feet deep, and will rest on an eighteen (18) inch thick reinforced concrete slab with a 5/16 inch thick stainless steel plate on the top surface of the slab. The top of this concrete slab will be sloped for drainage into a leak detection box system. The Valve Box cover (2.5 inches thick) is also constructed of stainless steel plates encapsulating lead fill material for shielding purposes. The top of the box may protrude slightly above the finished grade by approximately four inches.

C3.2. Flowpaths Into and Out of the Tank 50 Valve Box. The Tank 50 Valve Box will permit multiple flowpaths between tanks and other facilities simultaneously. Filtrate from the In-Tank Precipitation (ITP) process will now go through the Valve Box to the Saltstone Production Facility. Spent washwater from ITP will be transferred to and from Tank 50 through the use of this Valve Box. The Effluent Treatment Facility line originally going to Tank 50 will be cut and spliced into the new Valve Box to allow the ETF concentrate waste to be piped directly to the Saltstone

Production Facility. Attached to this document is both a Current and a Proposed High Level Waste Salt Processing Flowsheet depicting the various flow paths before and after construction of the new Valve Box.

C3.3. Tank 22. Originally, spent washwater from the Filtrate Hold Tanks went to Tank 22. With Tank 22 no longer a part of the ITP process, this spent washwater will now be directed from the Stripper Building through the new Valve Box for transfer on to Tank 50. This Type IV tank is being removed from the ITP Process Flowsheet principally due to the impracticality of providing it with an inerting system that would allow the safe storage of waste that may contain benzene.

C3.4. Filtrate from Hold Tanks. The filtrate from the Stripper Building Filtrate Hold Tanks will now go directly to the Saltstone Production Facility by transfer through the new Valve Box. Originally this filtrate went into Tank 50 where it was then transferred to the Saltstone Production Facility.

C3.5. Spent Washwater. The spent washwater from the Defense Waste Processing Facility originally returned to Tank 22 of the ITP Facility by way of the Latewash Facility. Now, this spent washwater will continue to return through the Latewash Facility, however, it will then go directly to Tank 50. From Tank 50, this spent washwater can be recycled again through the Filter/Stripper Building by way of the new Tank 50 Valve Box.

C4. Safety Features Incorporated Into The Tank 50 Valve Box

C4.1. Leak Detection. As described above, the new Valve Box will be lined with stainless steel plates to form a watertight secondary containment vessel in the event of a leak inside the structure. Any such leakage will be detected by a dual conductivity probe system located inside the Valve Box. The floor of the Valve Box (top of the concrete slab) is sloped to drain any leakage into a leak detection box. The leakage into this detection sump would then be transferred to Tank 50 by way of a gravity drain header.

C4.2. Radiation Protection. For radiation protection to the employees, the Valve Box walls and top are insulated with 3½ inches of lead shot fill material sandwiched between stainless steel plates. The floor of the box which is the top of the concrete slab also contains a stainless steel liner. All steel plate seams are welded to form a watertight structure. The structure will be entirely underground when construction is completed.

C5. Proposed F/H Effluent Treatment Facility Modifications

C5.1. Flowpath Changes. The flowpath out of the Effluent Treatment Facility (ETF) will be modified to run through the new Tank 50 Valve Box. Currently, wastewater from ETF destined for the Saltstone Production Facility goes through Tank 50. Upon completion of the new Valve Box, the wastewater will now be routed through the Valve Box and go directly to the Saltstone facility. The existing pipeline from ETF to

Tank 50 will be cut and spliced into the new Valve Box. The portion of the existing line going to Tank 50 will be utilized to provide a gravity drain for any leakages into the new Valve Box.

C5.2. Emergency Transfer Facilities and Capabilities. The connection between the ETF and the Tank 50 Valve Box will serve as the primary pathway for transferring wastewater from ETF to Saltstone. In the event a transfer from this pathway cannot take place for any reason, ETF will have one other way to transfer wastewater out of ETF. Though complex and difficult to accomplish, wastewater could be routed in case of emergency through Diversion Box 8 to Diversion Box 7, then to Tank 43, where it would thereafter re-enter the H-Area Tank Farm's Evaporator facility. If a transfer of wastewater from ETF is necessary after the line to Tank 50 has been severed, but before the Valve Box has been completed, then such a transfer through Tank 43 to the Evaporator may be performed as a part of normal operations.

C6. Proposed High Level Waste System Modifications

C6.1. Tank 22 Removal from ITP Process. Tank 22 will be removed the In-Tank Precipitation process flow sheet where it served to store spent wash water from the ITP and Late Wash filtration process. It would not be feasible to provide this Type IV waste tank with a nitrogen inerting system that would enable it to safely store wastewater that may contain benzene. Therefore, Tank 50 will be modified to accept the spent wash water.

C6.2. Tank 50 Change in Use. Tank 50 is a 1.3 million gallon Type IIIA primary tank which is contained within a carbon steel tank for secondary containment purposes. Its original use was to receive decontaminated filtrate from the ITP process and the waste concentrate from the ETF process. Under the new modifications to the HLW Flow Sheet, this tank will now be used to store spent wash water. Waste from Tank 50 will be routed through the new Tank 50 Valve Box for transferral to the Saltstone Production Facility.

D. Existing Permit Considerations

D1. Wastewater Treatment Facility Permit

D1.1. ITP and HTF. The proposed modifications to the HLW Flow Sheet will not change the existing permit conditions or requirements for ITP or the H-Area Tank Farm under the current Wastewater Treatment Facility Permit. The modifications to the waste transfer routes and the changes in use of particular tanks are part of the normal operations of the facilities to allow for the continuous treatment and removal of the waste. Further, these modifications will not change either the quantity or the quality of the effluent waste streams.

D1.2. ETF Waste Concentrate Flow Route. As originally permitted, the ETF waste concentrate normally flowed from the ETF through an existing ETF valve box to Tank 50 when such waste was suitable for processing at the Saltstone Production Facility. Under the new modifications, this waste concentrate will go directly to the Saltstone Production Facility by way of the new Tank 50 Valve Box. All recordkeeping requirements and other conditions of the ETF permit for waste transfers will continue to be fully performed as in the past.

D2. Air Quality Permit and Application

D2.1. Air Emissions. The current Bureau of Air Quality Control permit for the H-Area Tank Farm and ITP Facilities will not be impacted by the proposed HLW modifications. These modifications will change the flowpaths of certain waste streams, but do not result in air emissions greater than that allowed in the permit or by agreement with the State of South Carolina. Efforts are ongoing with regard to the potential benzene emissions from the various tanks and facilities under the new HLW flow sheet modifications. As these efforts progress, any changes necessary to the Savannah River Site's Title V Air Permit Application under the Clean Air Act Amendments of 1990 will be promptly transmitted to the Bureau of Air Quality.

D3. Saltstone Production Facility.

D3.1. Saltstone. The modifications to the HLW Flowsheet discussed herein will not change the Saltstone Production Facility's processes for manufacturing the grout which is disposed on-site in concrete vaults. Under the proposed modifications, the Effluent Treatment Facility's concentrate will go through the Tank 50 Valve Box, but not into Tank 50, as it travels to the Saltstone facility. The ITP filtrate will also be transferred to the Saltstone facility by way of this Valve Box. These two waste streams were previously combined in Tank 50 before transferral to the Saltstone Production Facility.

The Department and its contractor have brought substantial expertise to bear on understanding the science of the ITP process and the phenomena attending it. However, the Board is concerned that some important questions remain unanswered. First, the physical basis for holdup of large amounts of benzene in the waste and its removal through mixing pump operation is not yet well understood. Therefore, confidence in the ability to control its release is not as high as desired.

The Board is also concerned with the results of a recent laboratory-scale experiment using Tank 48 solution and TPB additive. The results from this experiment indicate that the amount of TPB which decomposed exceeded that amount which had been added during the experiment, suggesting that the cesium and potassium TPB precipitates had also partially decomposed, presumably through catalytic attack. If the cesium and potassium TPB precipitates were subject to rapid and extensive attack by a catalyst, an enormous amount of benzene could be generated, and the rate of release could be rapid enough to overwhelm the removal capability of the purging system for Tank 48.

The Board concurs with the view that ITP is of high value for subsequent vitrification of the nuclear waste in the tanks at the Savannah River Site, and that further testing is necessary to gain a better understanding of the science of the process to assure safety during and after precipitation of the cesium. The Board believes that if it were conducted according to the limitations stated above, PVT-1 can be run safely and can help in leading to an improved understanding of the science and the mechanisms involved in the ITP process.

The present plan for conduct of PVT-2 involves new and untested nuclear waste and a much larger addition of TPB. Furthermore, the liquid in Tank 49, which contains TPB from the previously mentioned 1983 demonstration test, is to be used as the source of a significant part of the TPB to be added to Tank 48 during PVT-2. The Board understands that Tank 49 was also the source of TPB used in the one experiment which led to an apparent decomposition of precipitated cesium and potassium TPB. One very probable interpretation of that anomaly is that the material in Tank 49 contains an unknown catalyst which can attack the precipitated material and might also increase the rate of release of benzene by an amount that is unpredictable at present. Furthermore, waste from tanks not yet tested could contain unknown constituents that could also adversely affect the rate of production and release of benzene.

The Board believes that the uncertainty in understanding of the science of ITP would make it imprudent to proceed from PVT-l to PVT-2 without substantial improvement in the level of understanding. Some such improvement may follow interpretation of the results of PVT-l. Better understanding of the anomalous experiment suggesting decomposition of TPB precipitates is also required.

Therefore, the Board makes the following recommendations:

1. Conduct of the planned test PVT-2 should not proceed without improved understanding of the mechanisms of formation of the benzene that it will generate, and the amount and rate of release that may be encountered for that benzene.

2. The additional investigative effort should include further work to (a) uncover the reason for the apparent decomposition of precipitated TPB in the anomalous experiment, (b) identify the important catalysts that will be encountered in the course of ITP, and develop quantitative understanding of the action of these catalysts, (c) establish, convincingly, the chemical and physical mechanisms that determine how and to what extent benzene is retained in the waste slurry, why it is released during mixing pump operation, and any additional mechanisms that might lead to rapid release of benzene, and (d) affirm the adequacy of existing safety measures or devise such additions as may be needed.

John T. Conway
Chairman

Wastewater

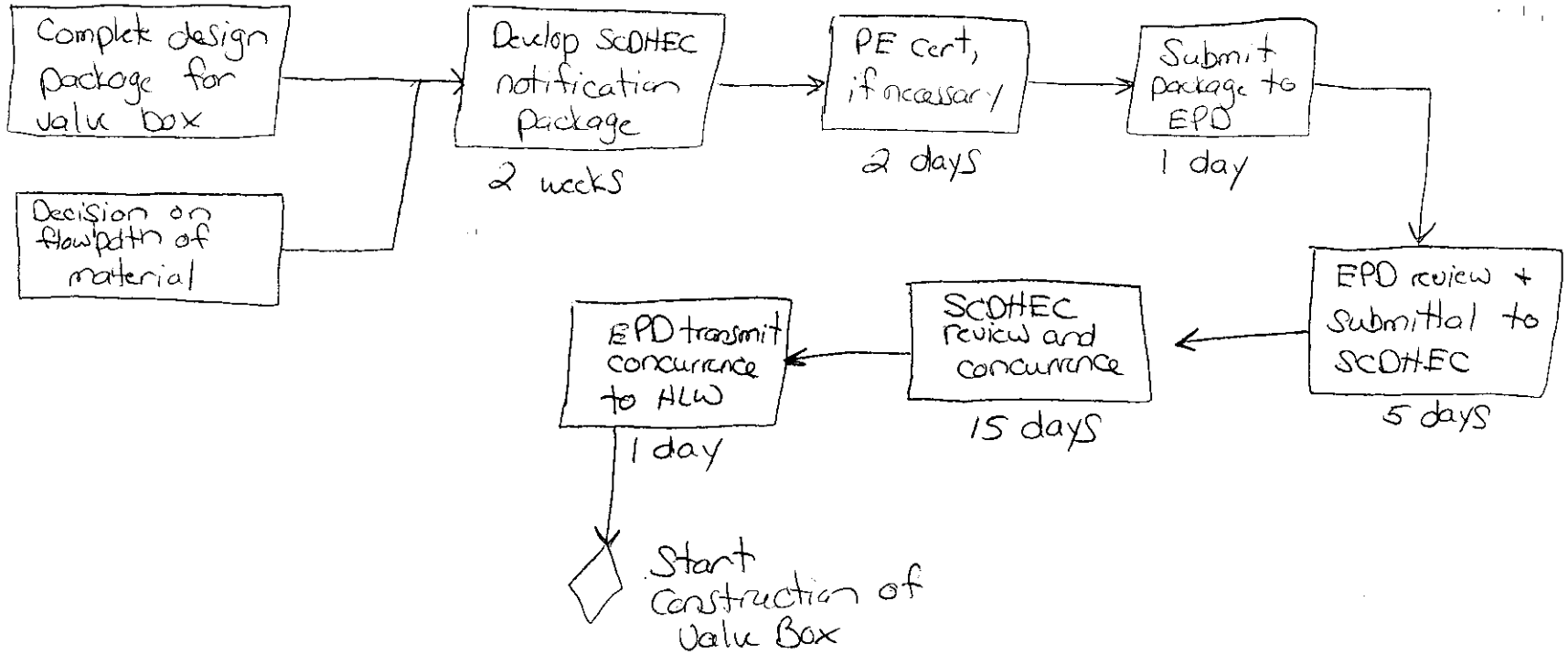

Air

Do nothing at this time based on approval letter from SCDHEC on "system" approach except:

- confirm ~~from ma~~ that total benzene emissions for HLW will be < 47.46 tons/year (perform prior to each STPB strike)

Longer term:

update Title V permit application once we have some operating data from whole system (including Saltstone, DWPF-SPC)

FLOW-SHEET TASK FORCE PRELIMINARY RECOMMENDATION AND MODEL PREDICTIONS

GLENN A. TAYLOR
PAUL L. RUTLAND
OCTOBER 25, 1996

First

Plant Configuration Changes

- Tank 50 Designated Wash Water Hold Tank
  - Late Wash and ITP
- Decontaminated Salt Solution Processed Directly to Saltstone
- ETF Bottoms Transferred Directly to Saltstone

System Operational Strategy

- Minimize Excess STPB (<10%)
- Maintain Operating Temperatures Low (<35^{0}C)
- Mix Tanks Often to Release Retained Benzene
- Wash as Soon as Possible

System Operational Strategy
ITP

Batch Processing

- Maintain Temperature < 35^0C
- Maintain Excess STPB < 10%
  - No Solid Excess STPB
- Mix Tank 48 Often During Non-processing Modes to Release Retained Benzene
- Decontaminate Each Batch to < 30 nCi/g Cs^{137}
  - 10 % Excess Produces Filtrate at 2 nCi/g
  - DF Maintained for 1 Months
- Filtrate Processing First Cycle
  - Tank 50 Must be De-inventoried Prior to Washing
  - Tank 50 Used to Store DSS for Processing in Saltstone
    - » If Safety Basis Allows

System Operational Strategy ITP (cont.)

- Filtrate Processing Long Term
  - Close Coupled ITP-Saltstone Operation
    - » Operate ITP to Match Saltstone Operating Capacity
      - Maximum 40 gpm Filtrate Production
  - New DSS Storage Tank (130,000 gal working volume)

<u>Wash Cycle</u>

- Wash to 0.2 M Na^+
- Store Wash Water in Tank 50 for Recycle
- Mix Tank 48 Only to Extent Required
  - 4 Slurry Pump Operation at 600 rpm will not heat tank
- Maintain Tank 48 Temperature < 35^0C

System Operational Strategy ITP (cont.)

<u>Tank 49</u>

- Mix Tank Often
- Maintain Temperature < 35^0C

<u>Tank 50</u>

- Mix Tank Often
- Maintain Temperature < 35^0C
- Expected Maximum Tank 50 Curie Loading
  - Produce 200 cans/year
  - 6 ITP Batches/year: 180,000 ppt @ 24Ci/gal
  - ITP Wash Water 600,000 gal/yr @ 0.012 Ci/gal
  - Late Wash Wash Water 500,000 gal/yr @ 0.036 Ci/gal
  - Late Wash Filter Cleaning Flush 4,250 gal/yr @ 3.6 Ci/gal
  - Tank 50 Annual Average 1,104,000 gal/yr at 0.037 Ci/gal
  - 5 Flushes of LW Filter with Minimum Heel in Tank 50 of 30,000 gal Results in a Curie loading of 0.17 Ci/gal

System Operational Strategy
Late Wash Facility

- No STPB Strike
- Wash with 0.001 M STPB Solution
- Control Temperature to < 35^0C
- Wash Water to Tank 50 < 0.036 Ci/gal

System Operational Strategy
ETF Concentrate Handling

Near Term

- Transfer to SSHT via Tank 50 Valve Box
  - Resolve Temperature Issue
- Or Transfer to Tank 43 or a Type IV Tank

Long Term

- Transfer to New DSS Storage Tank and Combine with ITP Filtrate

Modeling

- Using Detailed ITP Model
  - Time Dependent Flow-sheet Model
  - Been Used for Past 3 years
  - Used for Air Quality Permit Submission Support
  - Used for ITP Batch Planning in Support of System Plan
  - Used to Assess Various Operating Strategies Such as Hydroxide Only and JIT Flow-sheets
- Using Old
  - G values
  - Mass Transfer Correlation
  - Radiolytic Decomposition

Modeling (con't)

- Added New Preliminary
  - Solubility Equations @ 25 ^{0}C
    - » Waiting for Temperature Dependency to be Defined
  - Decomposition Kinetics
    - » Expected to Change
- Developing a Detailed Late Wash Model to Couple to Detailed ITP Model
  - Need for Model was Identified in 7/10/96 TOST Presentation
  - Development was Planned for Later in the Year, Completing Development Now
  - A Dynamic LW Model has Never Been Developed

Modeling (con't)

- Enhanced Model will be Used to Support Same Type of Tasks as Above
- Work will be the Basis for Updating and Upgrading PRODMOD and HLWIFM

Model Run Parameters

- Using Generic Salt Solution
- Concentrating to 10 wt%
- 10% Excess STPB
- Slurry Temperature at 35 ^{0}C
- "Reference" Flow-sheet
  - 3 batches/cycle
  - Wash to 0.2 M Na
- Mass Transfer on When Supernates Added or at Beginning of Wash
- Ran for 3 Cycles to see Effect of WW Recycle

Generic Cycle Parameters

- Generates About 2.5 Million Gallons Filtrate
- Generates About 500,000 Gallons Wash Water
- Wash Takes About 600 Hours(14 gpm)
- Takes About 1700 Hours (71 days)

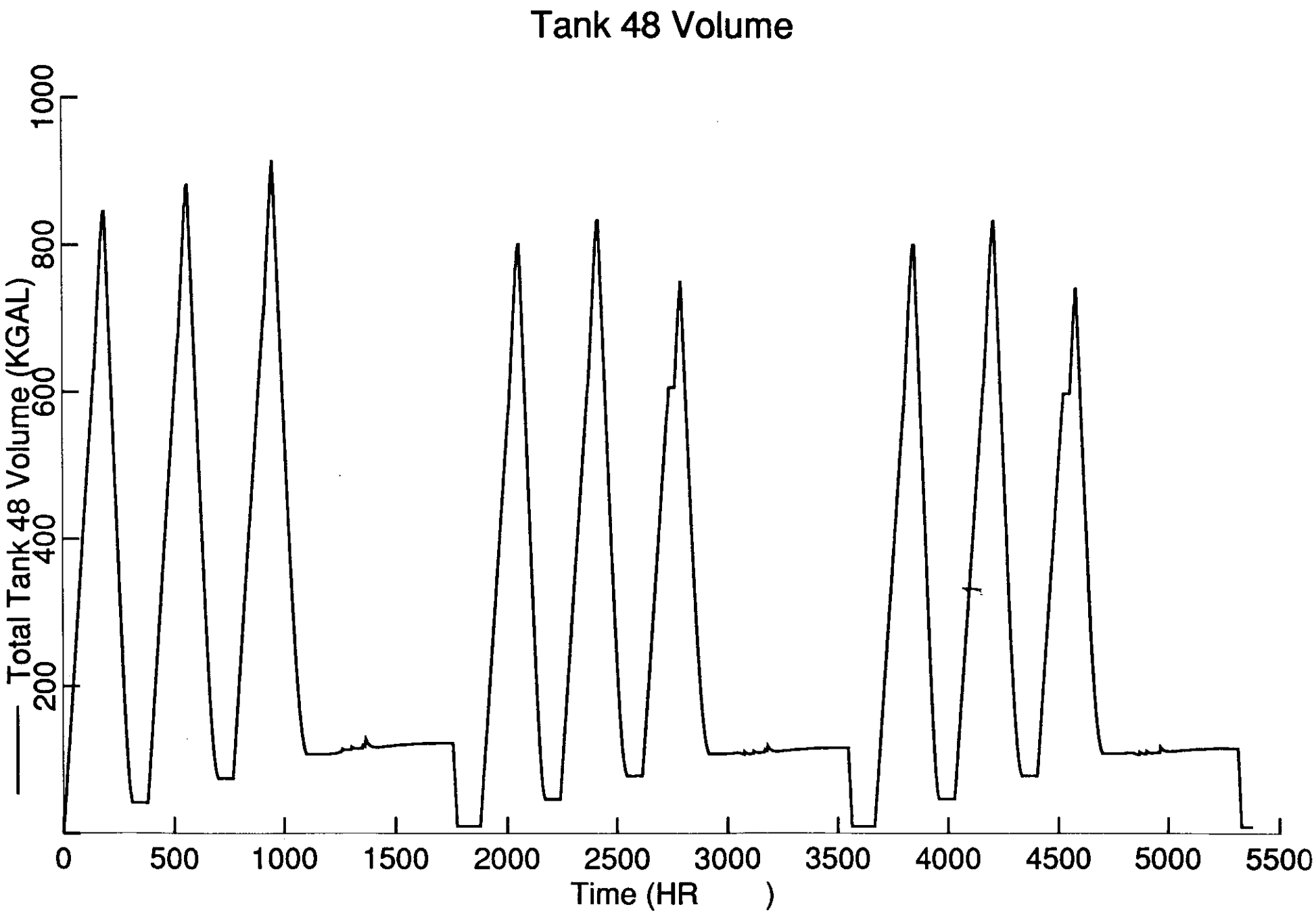
Tank 48 Volume
Total Tank 48 Volume (KGAL)
1000
800
600
400
200
0
500
1000
1500
2000
2500
3000
3500
4000
4500
5000
5500
Time (HR)

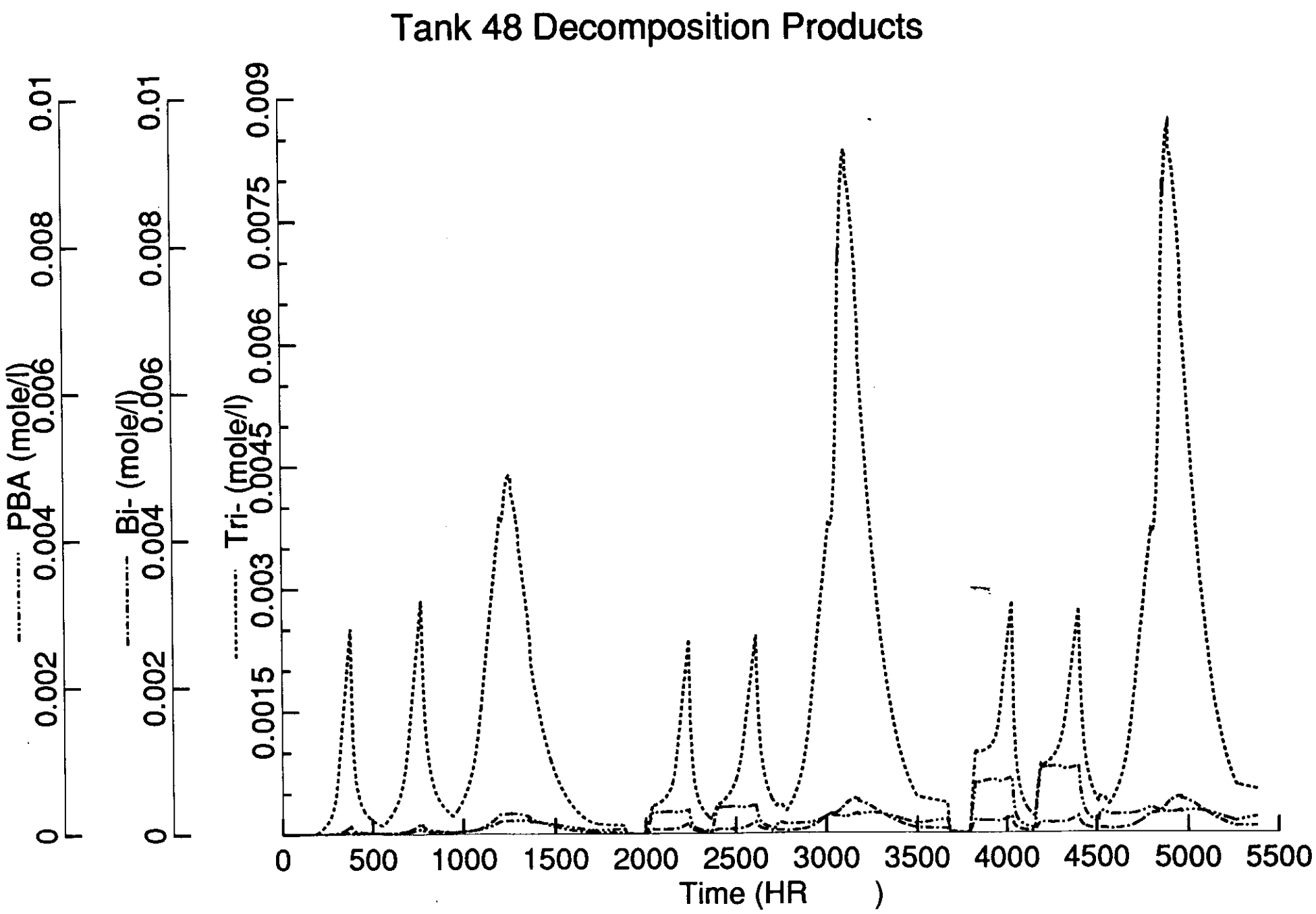
Tank 48 Decomposition Products
PBA (mole/l)
Bi- (mole/l)
Tri- (mole/l)
0
0.002
0.004
0.006
0.008
0.01
0.0015
0.003
0.0045
0.0075
0.009
0
500
1000
1500
2000
2500
3000
3500
4000
4500
5000
5500
Time (HR)

Tank 48 Benzene Evolution

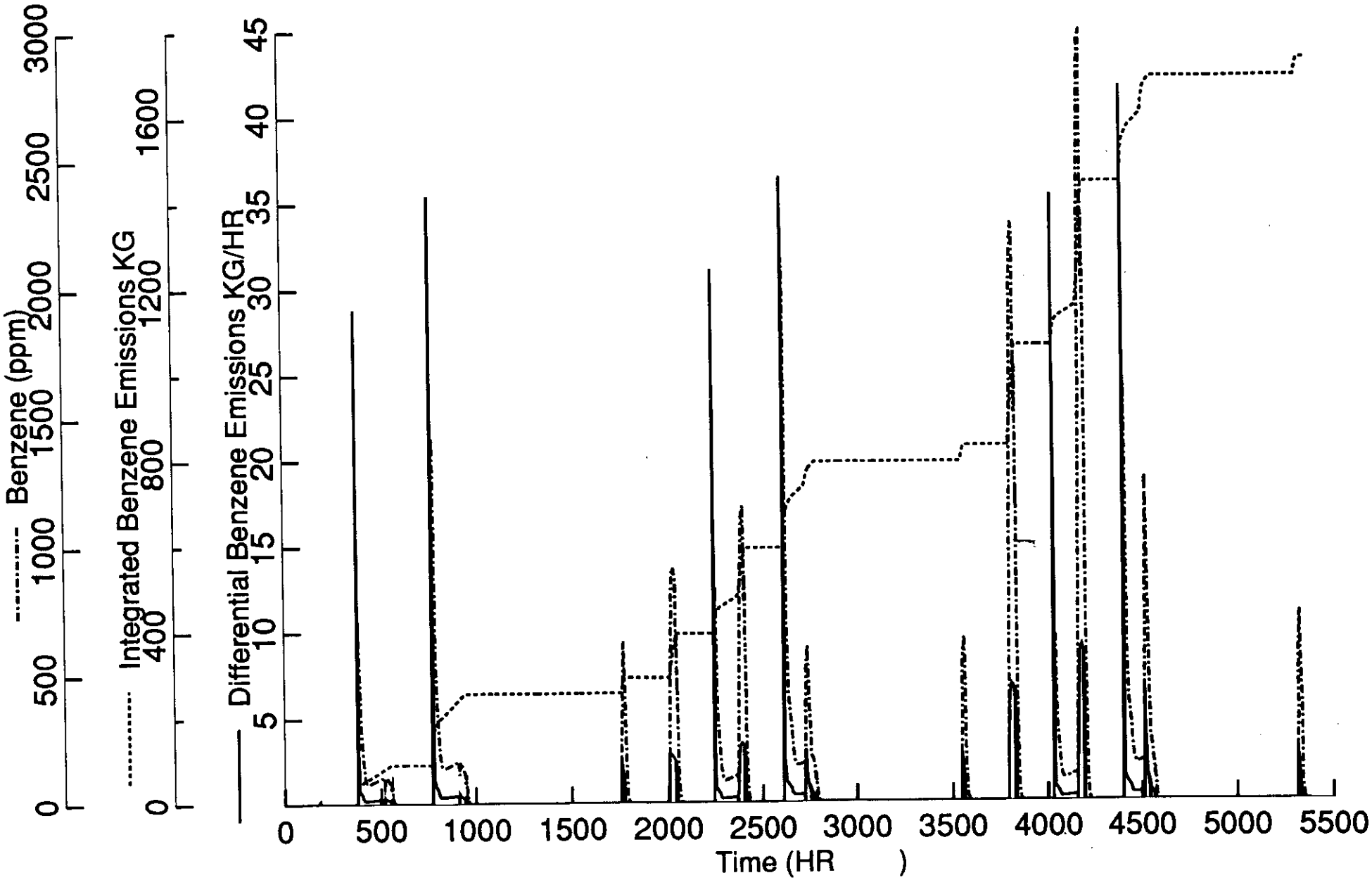

Tank 49 Decomposition Products

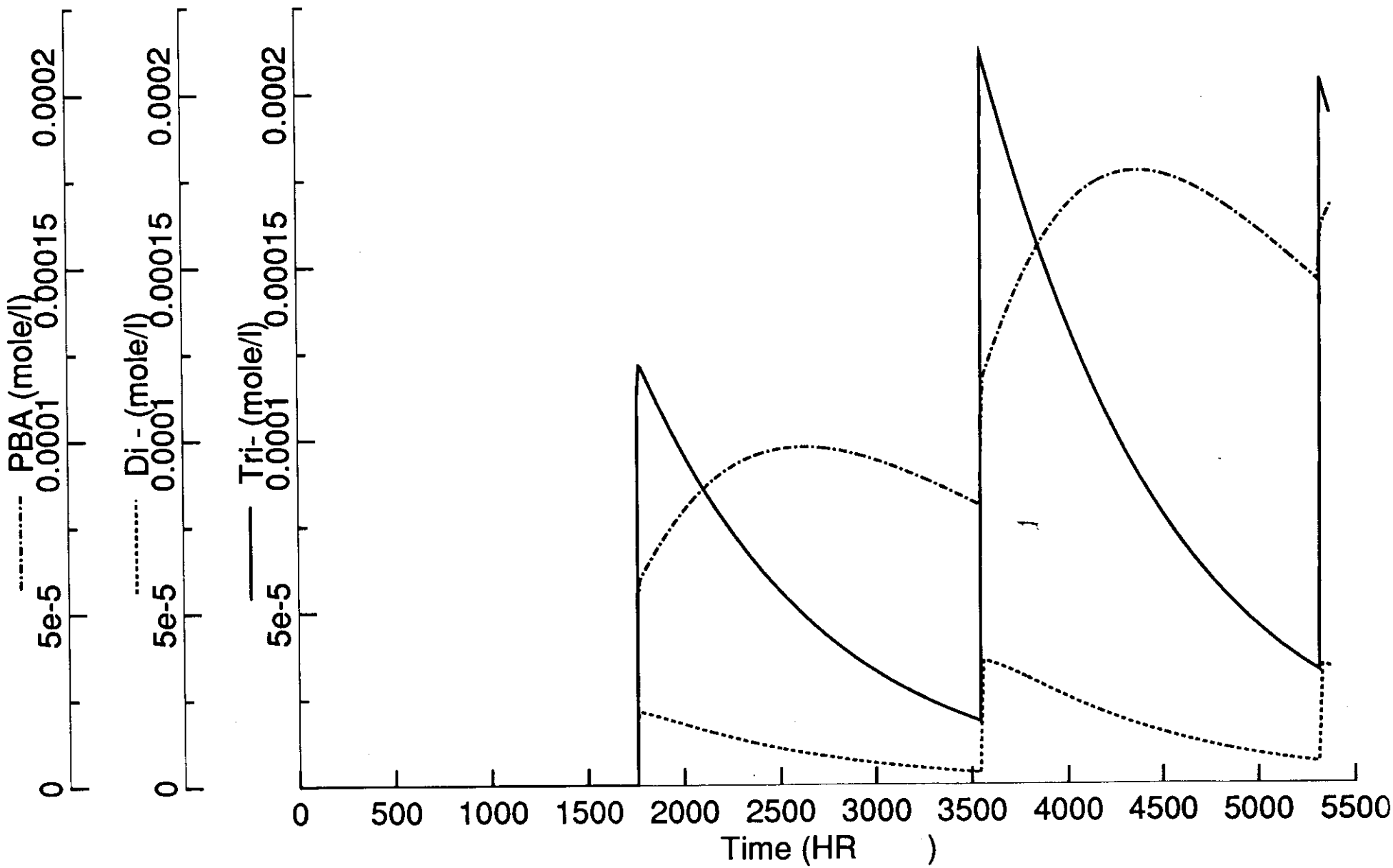

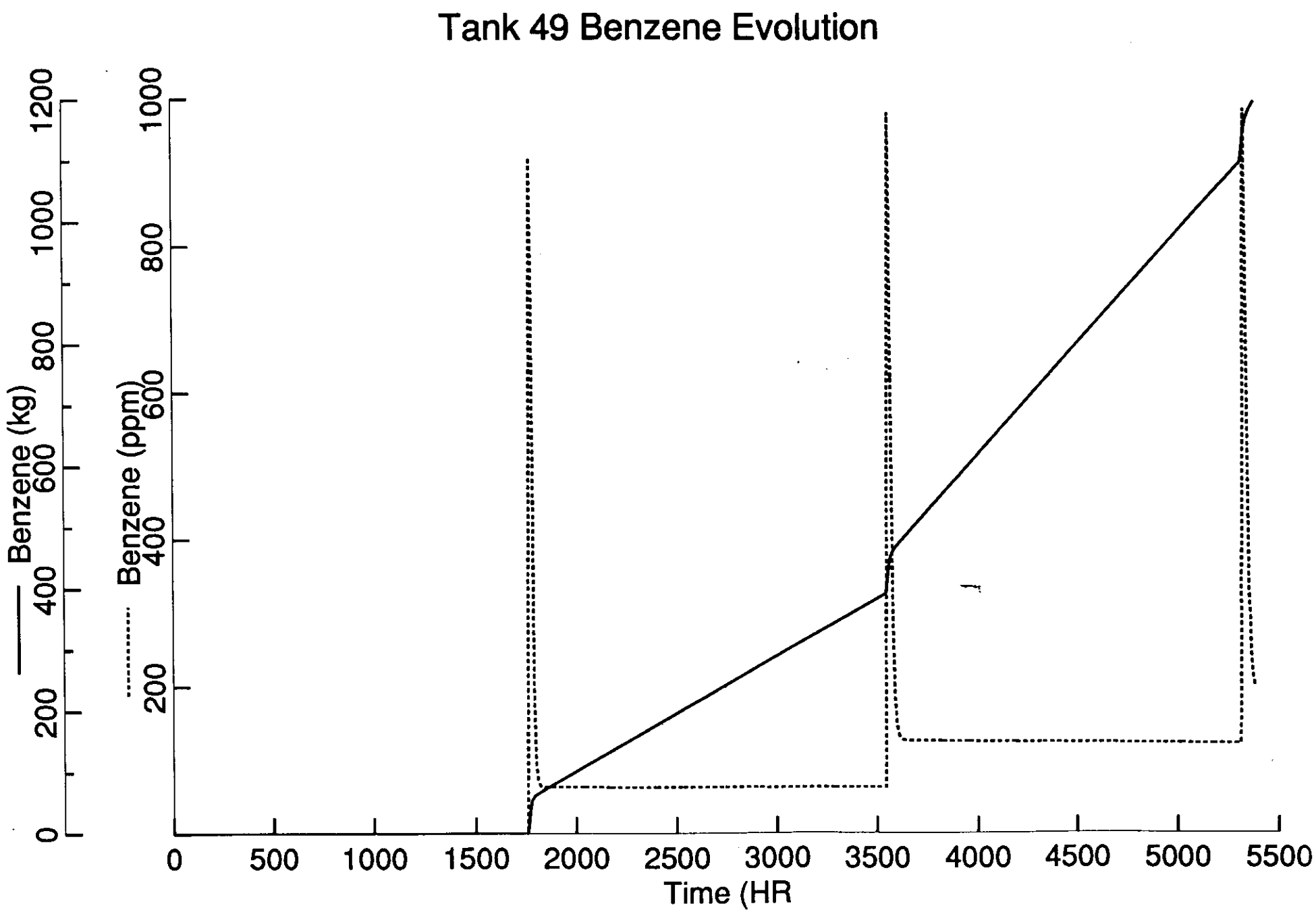
Tank 49 Benzene Evolution
Benzene (kg)
Benzene (ppm)
0
200
400
600
800
1000
1200
200
400
600
800
1000
0
500
1000
1500
2000
2500
3000
3500
4000
4500
5000
5500
Time (HR

Tank 50 Decomposition Products

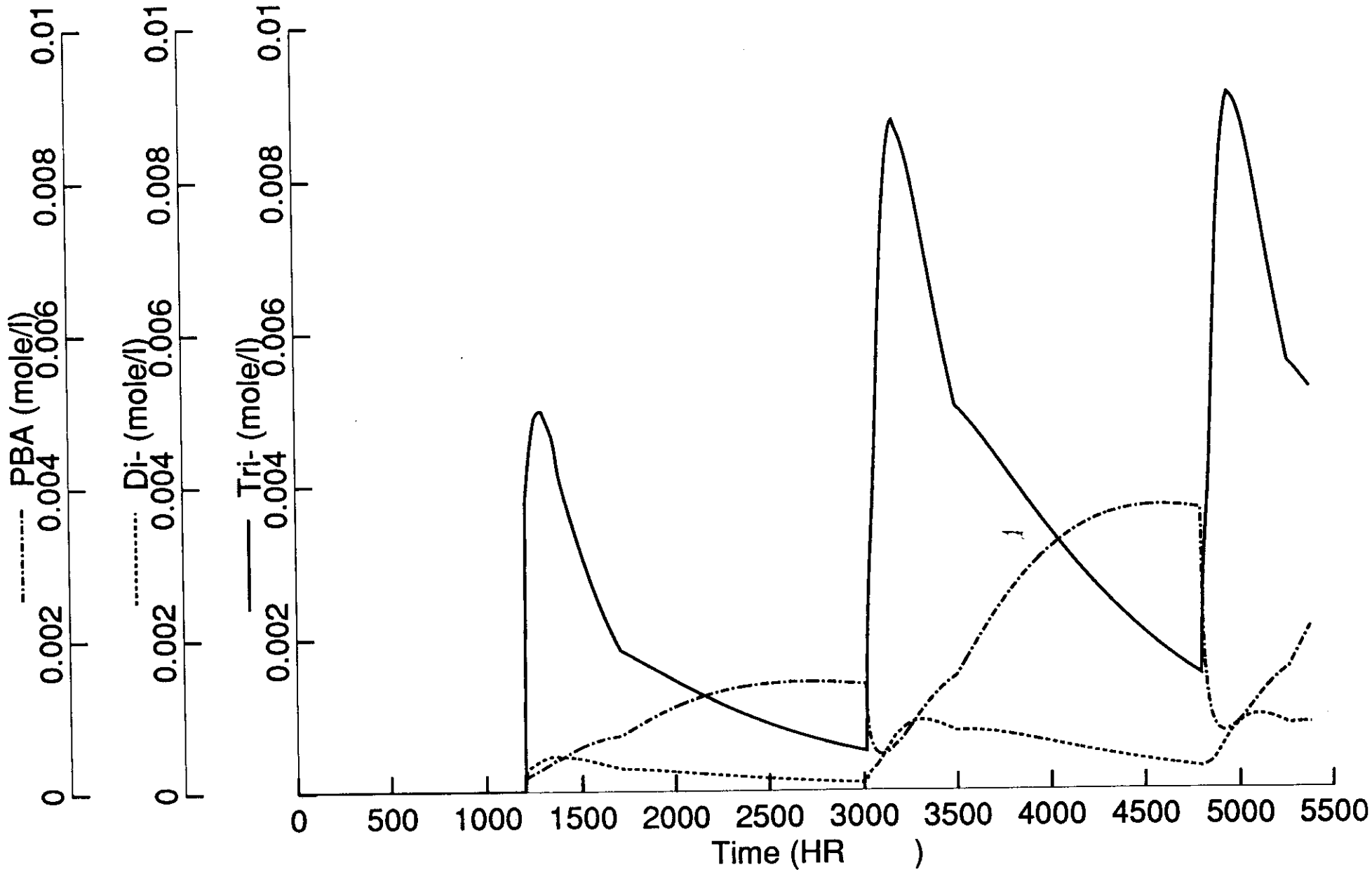

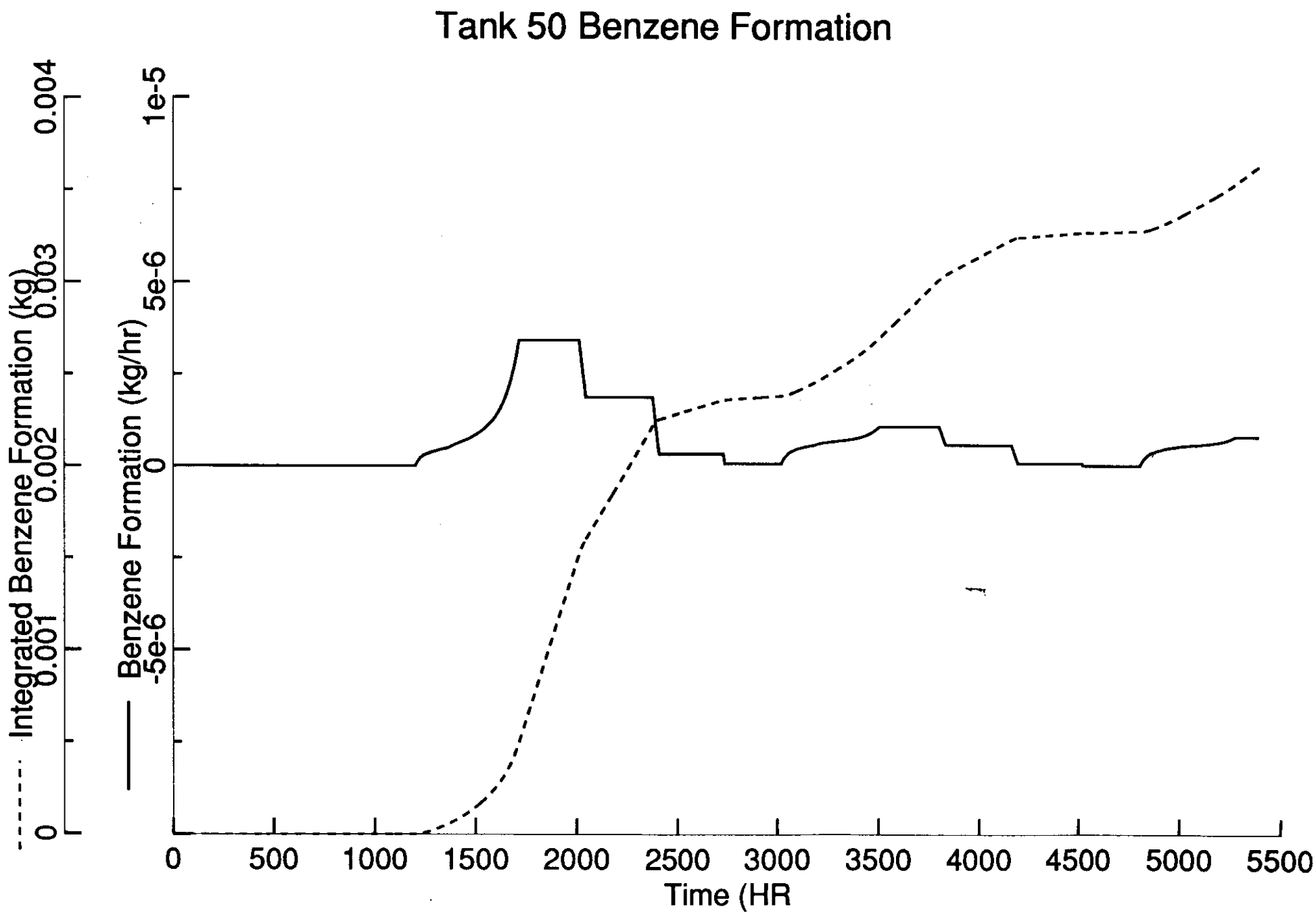
Tank 50 Benzene Formation
Integrated Benzene Formation (kg)
0
0.001
0.002
0.003
0.004
Benzene Formation (kg/hr)
-5e-6
0
5e-6
1e-5
0
500
1000
1500
2000
2500
3000
3500
4000
4500
5000
5500
Time (HR

Tank 48 Benzene Generate Rate

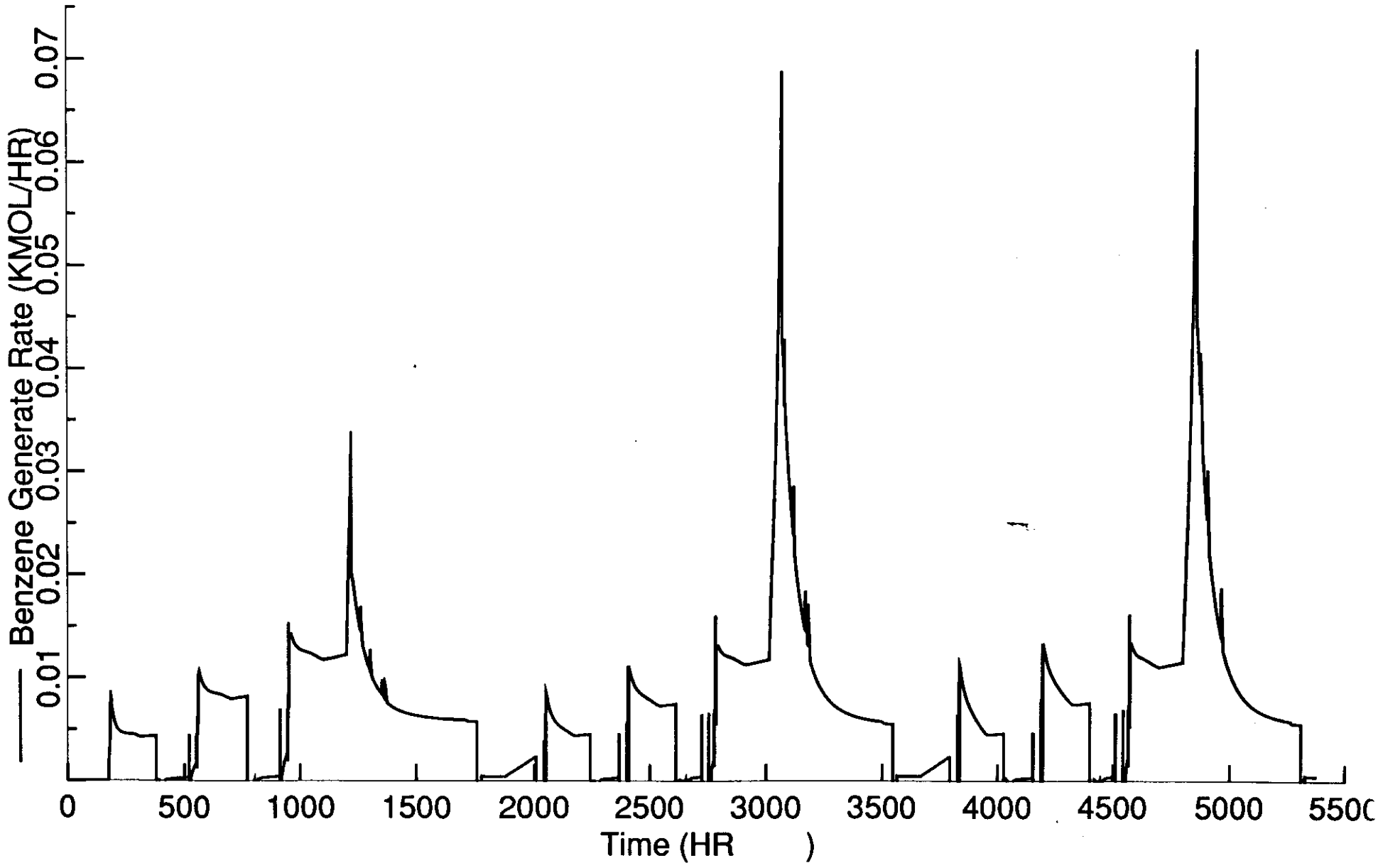

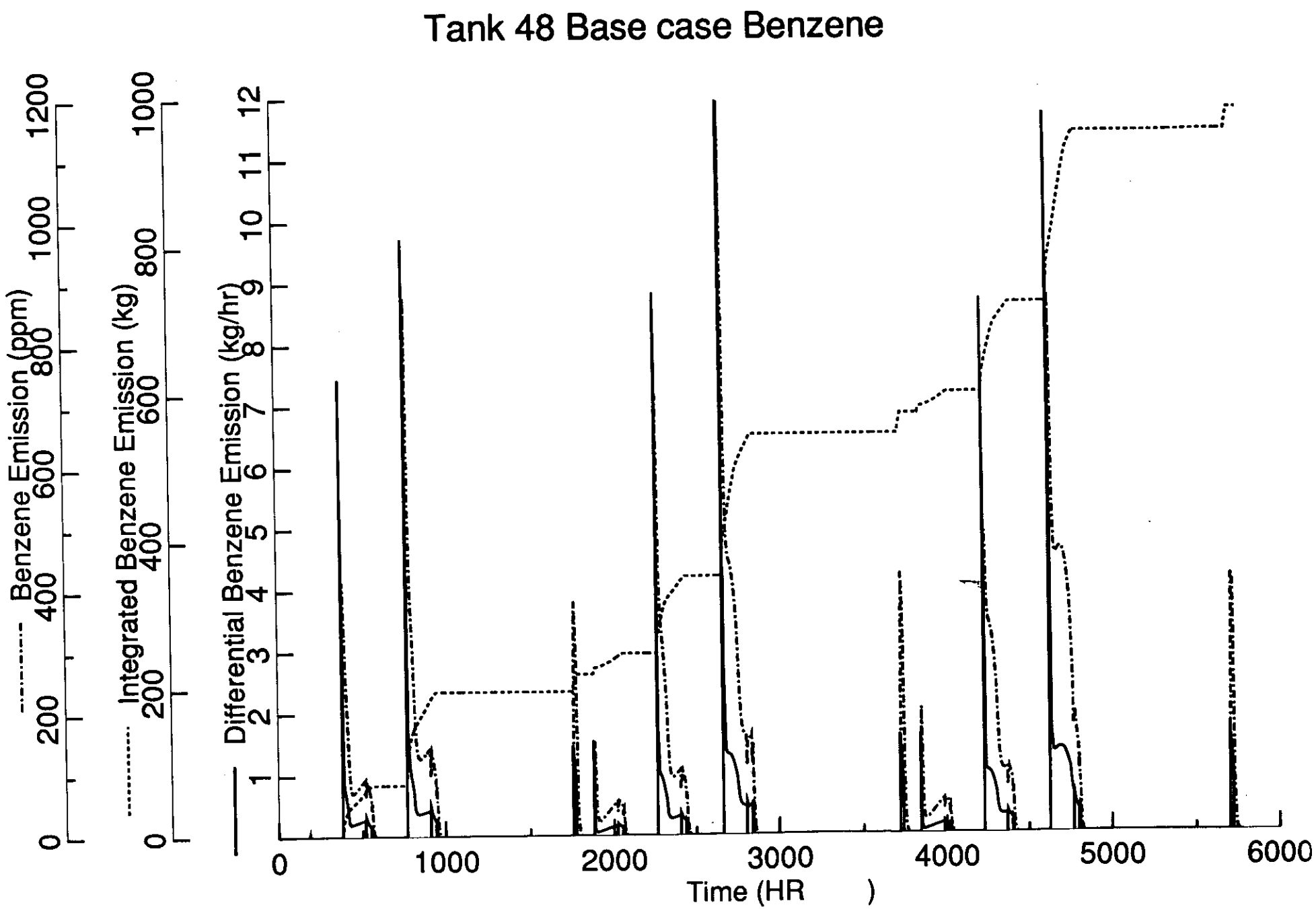
Tank 48 Base case Benzene
Benzene Emission (ppm)
0
200
400
600
800
1000
1200
Integrated Benzene Emission (kg)
0
200
400
600
800
1000
Differential Benzene Emission (kg/hr)
1
2
3
4
5
6
7
8
9
10
11
12
0
1000
2000
3000
4000
5000
6000
Time (HR)

Effect of Pump Operation

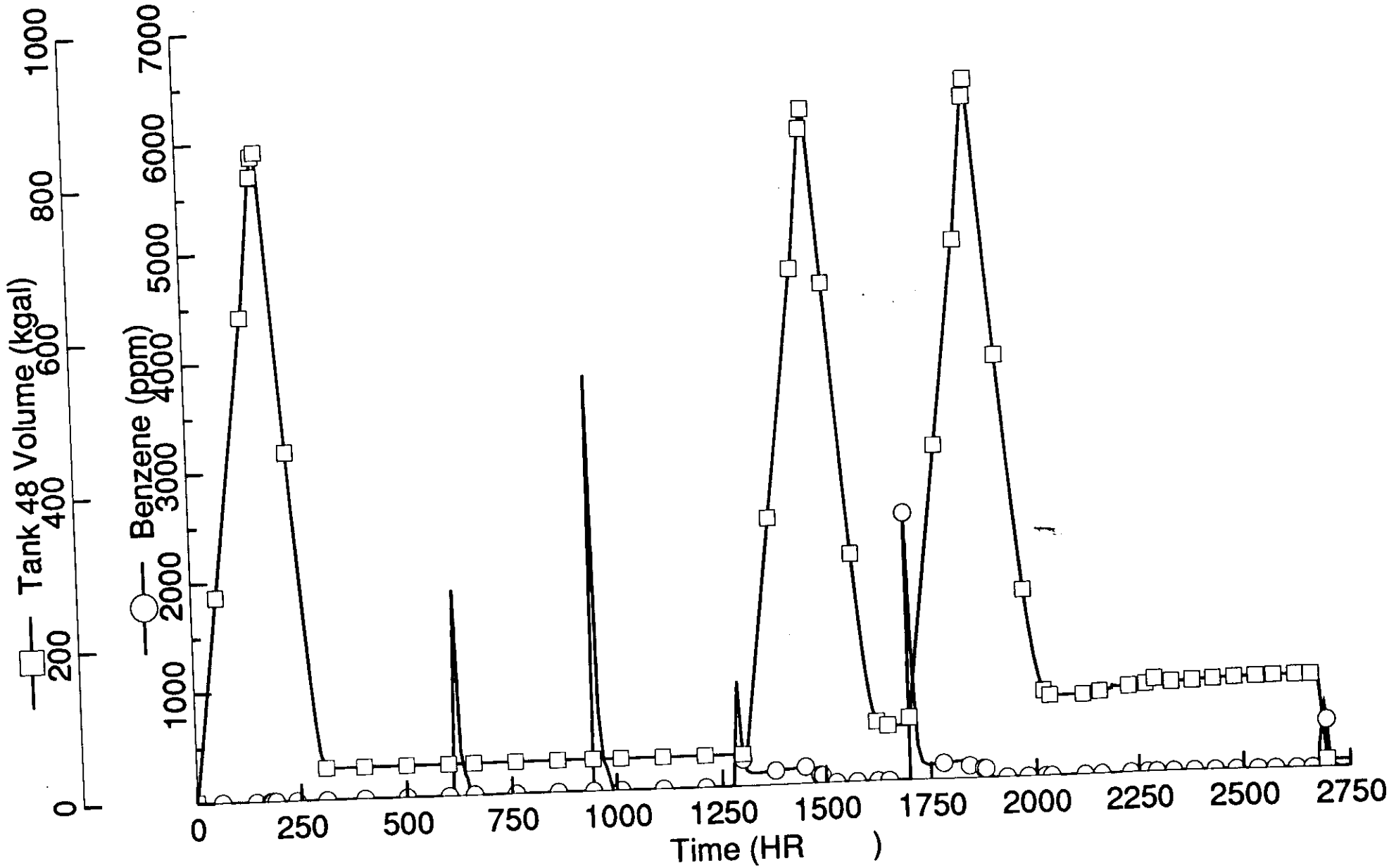

Effect of Pump Operation

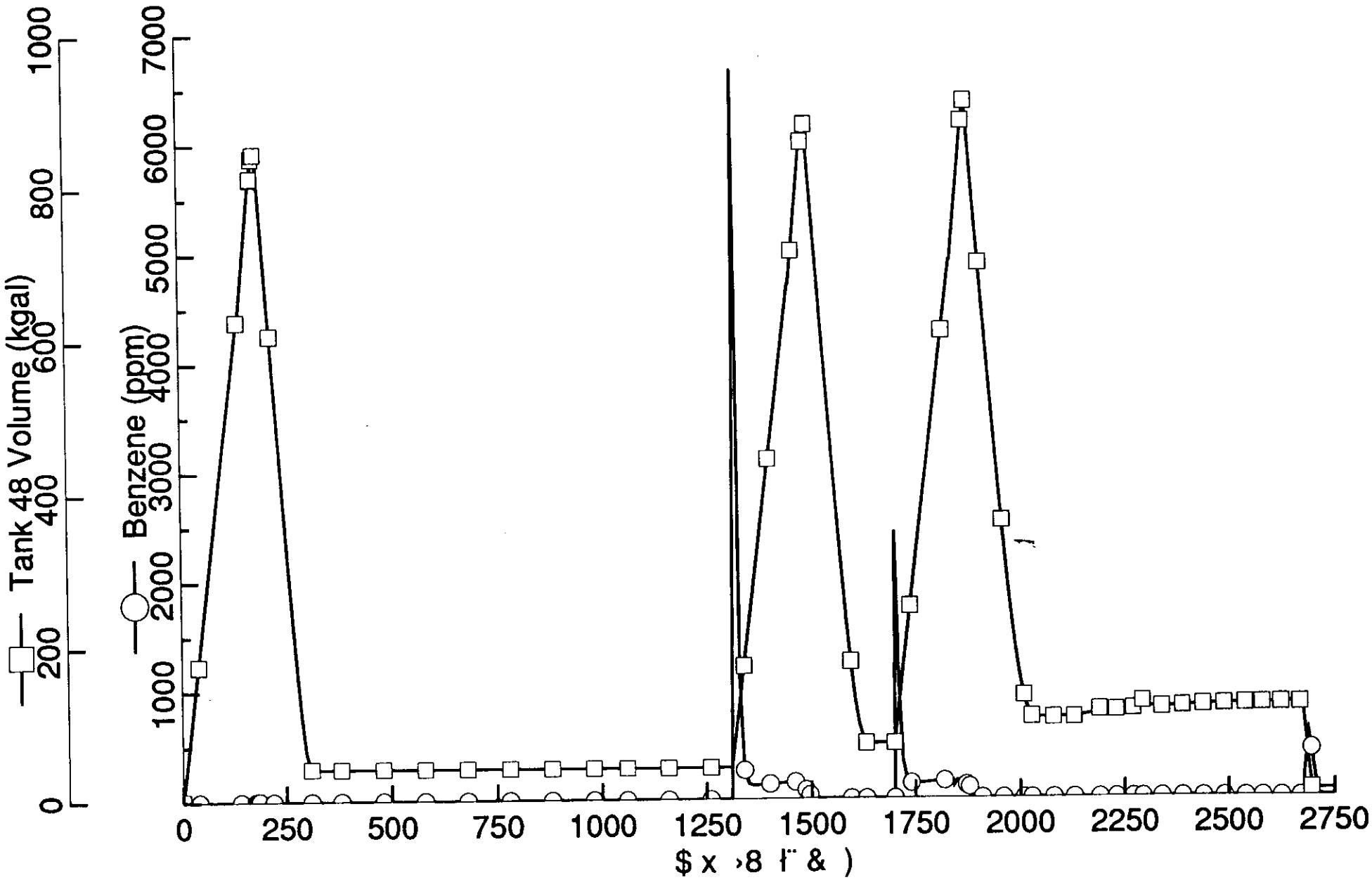

Future Studies

- Optimize Excess STPB
- Optimize Temperature Profiles for all Systems
- ITP/Late Wash Washing Endpoints

last

cc:Mail for: Chuck Hayes

Subject: Re[3]: ITP Proposed Configuration Changes & Permitting (U)
From: John Fowler at SRCCH02 10/2/96 4:26 PM
cc: Cassandra Bayer at SRCCA02
cc: Rm Campbell at SRCCA02
cc: Robertted Jones at SRCCA02
cc: JAMES BROOKE at SRCCA01
cc: PAUL RUTLAND at SRCCH05
cc: Glenn Taylor
To: JOE.CARTER at Mailhub
cc: DOUGLAS.BLUE at Mailhub
cc: HERBERT.ELDER at Mailhub
cc: NEIL.DAVIS at Mailhub
cc: LEE.DWORJANYN at Mailhub
cc: ROY.JACOBS at Mailhub
cc: SHARON.MARRA at Mailhub
To: MARTHA.THOMPSON at Mailhub
To: Chuck Hayes at SRCCA02

I agree with Chuck, which is why I suggested the unloading station at the Tank 50 valve box, if we plan to use tankers to receive ETF bottoms. We still have to let the bottoms cool to less than 35 deg. C before Z Area can accept it into the SSHT, independent of how we get it there. As noted in my response, putting a recirc. cooling loop on the SSHT may be the best long-term fix to give Z Area the ability to control their feed temperature.

Reply Separator

Subject: Re[2]: ITP Proposed Configuration Changes & Permitting (U)
Author: Chuck Hayes at SRCCA02
Date: 10/2/96 7:46 AM

Adding an unloading station at Z-Area could jeopardize its wastewater permitting status. When we originally permitted the Saltstone Facility, we had an unloading station in the design. In order to receive a permit, the State had us remove it. Just another point to consider.

Subject: Re: ITP Proposed Configuration Changes & Permitting (U)
From: John Fowler at SRCCH02
Date: 10/1/1996 12:07

Direct transfer of ETF to Saltstone will require that the ETF evaporator bottoms be cooled to less than 35 deg. Centigrade before sending to it to the SSHT. Right now, the ETF drops to Tank 50 which provides a large heat sink for bottoms that are generally hotter than 35 deg. Radiation/radioactivity is generally quite low for ETF bottoms, so little, if any shielding would be necessary. This limit on transfers to Z-Area is needed

to prevent exceeding 100 deg C. in the vaults as the saltstone cures. Exceeding 100 deg C. in the vault leads to a change in saltstone properties with a loss in strength and possibly excessive cracking or crumbling. Z-Area does not any cooling capability on the SSHT, so higher than 35 degrees prevents processing the solution into saltstone.

Temperature control is not a problem when feeding from Tank 50 or the filtrate hold tanks in ITP, since the temperature can be controlled in Tank 48 and Tank 50 to meet this requirement. If ITP close-couples to the SSHT, Tank 48 will likely have to be maintained at less than 35 deg C. during filtration operations (which is also desirable to minimize TPB degradation).

Alternatives and Required Mods

One possibility would be for ETF to dump to a trailer, allow the solution to cool, and then transport the trailer to Z-Area. This would require the installation of a truck-unloading station on the SSHT. Would also need to have a line installed in ETF to enable loading of a trailer, and a "truck loading" station is thus needed at ETF (Can the existing unloading station be used?).

A second possibility would be to pump through the H-to-Z transfer line, using a trailer as the feed source. This would require a truck unloading station connecting to the transfer line (Perhaps at the Tank 50 valve box?).

The long-term (and most desirable) solution that offers the maximum process flexibility would be to put a recirculating loop on the SSHT that can be passed through a heat exchanger or a chiller, so that the temperature of the salt solution can be controlled in Z-Area. Right now, Z Area must rely on generators to control the temperature of the solution. Adding this capability to Z-Area would also provide the ability to minimize TPB degradation, thus reducing benzene emissions from the SSHT.

Reply Separator

Subject: ITP Proposed Configuration Changes & Permitting (U)
Author: MARTHA.THOMPSON at Mailhub
Date: 9/26/96 4:36 PM

Proposed ITP Flowsheet Proposed Configuration Changes

- T49 to T48 transfer route (Cut & cap lines and tie-in to T48)
- T49 to T48 transfer route (Installation of leak detection)
- Piping modifications
- Tie-in at T49 valve box
- T22 removed from ITP process
- New valve box T50
- Inerting T50
- Tie-in spare line from Late Wash to T50 to the T50 to T43 line

All the above modifications are considered normal operation under the F/H Tank Farms Industrial Wastewater Treatment Permit (17,424-IW), provided that the effluent waste characteristics or flow rates do not change from those specified in the permit. They will, however, require a letter to the SCDHEC stating the changes we are implementing. We need to have the regulators agree to these mods before we write the letter (or implement the mods). This will be accomplished through a telephone call. The regulators may or

may not require that they approve these process changes once they receive our letter. If approval is required, this may take up to about six weeks with the regulators.

It is suggested that we not have these discussions with the regulators until we understand any impacts on Saltstone by moving ETF material directly to Saltstone. As long as there are no significant Saltstone impacts, then Saltstone would be added to the discussion with the regulators. This will address the changes on a high-level waste "system" basis. If there were significant impacts on Saltstone, a different strategy would need to be developed. Once we understand the Saltstone impacts, HLWEC will work with EPD to begin drafting letter to SCDHEC and prepare to discuss the changes with them.

Also, FFA Assessments are required to be performed before the equipment is put into service to assure the proper installation in accordance with Savannah River Site Federal Facility Agreement (WSRC-OS-94-42).

From a longer term perspective, the Title V Air Permit will require revision once we understand the STPB degradation better. Permit changes will be evaluated on a case-by-case basis as to whether or not a formal permit modification is required.

Summarizing, the regulators must agree (and/or approve) to the wastewater permit mods, FFA assessments must be performed, and the air permit must be revised based on the proposed changes.

cc:Mail for: Chuck Hayes

Subject: Re[2]: Truck Unloading at Z area SSHT
From: Chuck Hayes 11/21/96 9:24 AM
To: BHARAT.DAMANI at Mailhub
cc: Rm Campbell
cc: Kim Cauthen at SRCCH07
cc: John Fowler at SRCCH02
cc: Eric Freed at MAILHUB
cc: Sharon Marra at MAILHUB
cc: Rodney Satterfield at MAILHUB
cc: Monte Hawkins at MAILHUB

Yesterday, I briefly discussed (with Melinda Vickers of DHEC) the possibility of us putting an unloading station at Z-Area for the purposes of trucking in ETF bottoms. She said they (Industrial Wastewater Division) would consider approving such an arrangement only if there were no other practicable options available. They certainly would be against trucking as a long term solution. They may consider it for a temporary (less than a year or so) fix as long as we have plans for a permanent solution.

Melinda says the RCRA exemption issue would have to be answered by the DHEC RCRA people.

Subject: Re: Truck Unloading at Z area SSHT
From: Chuck Hayes
Date: 11/18/96 4:43 PM

I didn't want you to think I have forgotten about you. I'm still looking into this but I haven't done much yet. I'll get back to you soon. Thanks.

Subject: Truck Unloading at Z area SSHT
From: BHARAT.DAMANI at Mailhub
Date: 11/12/96 8:26 AM

I am forwarding this AIO for your information and to provide the bases for your discussion with SCDHEC for their initial assessment on the potential Z area permit impact from this modification.

The early assessment from SCDHEC is essential to develop a path forward for an implementation of the final configuration and the SCDHEC approval of the comprehensive permit package.

The proposed ITP modification is to replace tank 22 with tank 50 (of ETF) for safety and environmental upgrade to mitigate the impact of an excessive benzene generation. Some additional modification to Z area facility will also be necessary. These modifications to Z area are for continue to receive the feed from the ETF evaporator bottom below 35 degree centigrade in absence of tank 50 availability. The criteria for temperature is to maintain content of SSHT low enough so that the vault temperature during curing of the saltstone grout remained below 100 degree C necessary to maintain its structural integrity.

The available options are:

1) ETF to transfer the evaporator bottoms from existing 1500 gallon tanks in the tanker trailer and allow it to cool before transporting the trailer to Z area. The tanker content will be transferred to SSHT. This operation will require tanker loading and unloading at ETF and Z area respectively. There is a possibility that an existing unloading at ETF evaporator which was used during DWPF CCR recycle wastewater treatment and disposal at ETF can also be utilized for this purpose.

2) Empty the tanker with the evaporator bottoms to the H-Z area transfer line. This will require a truck unloading at the transfer line may be at the tank 50 valve box.

3) A backup to tank 50 for the decontaminated salt solution storage which may be required and in that case the unused STPB tank may be upgraded for the backup as well as the storage of the ETF bottoms. This tank will be connected to the transfer line via tank 50 box or some other means.

The option 1 is currently preferred because of quick and less costly implementation and without any other uncertainty. The option 2 will require transfer through the H-Z transfer line in a small batch of 1500 gallons through 5000 gallons. This will not yield a large throughput at Z area because most of the material will stay in the line at the low point until it is filled. The line will be always filled in this case since the low point drain tank is currently bypassed. This may be of some concern. The option 3 or providing any new dedicated tank will require more time and money to implement and can be looked at as a longer term alternative.

The strategy is that considering the current situation, the HLW operation and management desires the SCDHEC response to the option 1 implementation although, initially the unloading facility was not allowed by SCDHEC under the waste water permitting status. Secondly; if rejected again, can it be used as a temporary until a option 3 or the other suitable be implemented.

If, any one has to add or make any correction to this pl; do so.

We will appreciate your immediate attention in this matter.

W-0517

South Carolina
DHEC
Department of Health and Environmental Control
2600 Bull Street, Columbia, SC 29201-1708

Commissioner: Douglas E. Bryant

Board: John H. Burriss, Chairman
William M. Hull, Jr., MD, Vice Chairman
Roger Leaks, Jr., Secretary
Richard E. Jabbour, DDS
Cyndi C. Mosteller
Brian K. Smith
Rodney L. Grandy

Promoting Health, Protecting the Environment

January 14, 1997

Mr. J.W. Cook, Manager
CERCLA, Geological and Permitting Section
Environmental Protection Department
Westinghouse Savanah River Company
Building 742-A, Rm 196
Aiken, SC 29808-0001

Re: Transfer of High Level Waste Tank 17 Contents
SRS
Aiken County

Dear Mr. Cook:

This Office has reviewed your request to transfer approximately 350,000 gallons of wastewater from Tank 17 to Tanks 5 and/or 6. So that Tank 17 may be readied for closure and to avoid future delays related to high level waste removal and tank closure, this Office hereby approves the transfer of this wastewater to Tanks 5 and/or 6 as stated in your January 14, 1997 letter to this Office.

Should you have any questions or comments, please contact me at 803-734-0819.

Sincerely,

Melinda G. Vickers

Melinda G. Vickers
Environmental Engineer Associate
Industrial, Agricultural, and Storm Water Permitting Division

cc: Lower Savannah EQC
Keith Collinsworth, BSHWM w/Jan 14, 1997 letter

W-0517

WESTINGHOUSE SAVANNAH RIVER COMPANY

INTER-OFFICE MEMORANDUM

ESH-CGP-97-0021

January 22, 1997

TO: S. L. MARRA, 703-H

FROM: C. R. HAYES, 742-A
(5-8838)

SCDHEC APPROVAL FOR TRANSFER OF HIGH LEVEL WASTE TANK 17 CONTENTS (U)

Attached is a copy of the SCDHEC letter approving the transfer of High Level Waste (HLW) Tank 17 wastewater to HLW Tank 5 and/or Tank 6. Please notify me in writing upon transfer initiation and completion.

Contact me if there are any questions.

CRH:aeo
Attachment

cc: D. T. Bignell, 742-A
T. B. Caldwell, 703-9C
J. W. Cook, 742-A
P. d'Entremont, 703-H
A. R. Gough, 730-B
H. M. Handfinger, 703-H
G. S. Hoover, 703-A
T. T. Henderson, 703-H
L. T. Ling, 703-H
J. L. Newman, 703-H
R. M. Satterfield, 719-4A
G. E. Turner, 703-A
M. R. Wilson, 241-154H
EPD Fileroom, 742-A
Records Administration, 773-52A

cc:Mail for: Chuck Hayes

W-0517

Subject: T49 to T48 Modification (U)
From: Chuck Hayes 9/17/1996 15:24
To: Cassandra Bayer
To: Martha Thompson at MAILHUB

One FFA assessment is acceptable for both jobs. The assessment will have to be completed in time to submit it on 3/9. If the work in completed prior to 3/97, then the report is due to SCDHEC by 3/9/97.

I believe we can handle this modification through a letter to the State, requesting their approval.

Please contact me if you have any questions.

cc:Mail for: Chuck Hayes

Subject: T49 to T48 Modification (U)
Forwarded: Cassandra Bayer 9/17/1996 13:10
To: Chuck Hayes

Chuck,

I believe I can answer the questions dealing with the FFA, but need some help with the one on the Wastewater Permit.

I think only one FFA assessment needs to be generated. On the timeframe of gneration of the report, I feel the more you know the better, therefore wait until the DCF/DCP is completed.

Please let me know what you think. If you need addtional information, please contact me.

Thanks,

Cassie

Forward Header

Subject: T49 to T48 Modification (U)
Author: MARTHA.THOMPSON at Mailhub
Date: 9/17/96 12:05 PM

To make a direct transfer route from Tank 49 to Tank 48, the work will be covered under two DCPs. The first will cover the cutting and capping of lines and the tie-in to Tank 48. The second DCP will cover the installation of leak detection.

Questions:

Can one FFA assessment be performed to cover both DCPs?

When does the FFA assessment(s) need to be completed?

Will this work require either a permit modification or a letter to the SCDHEC outlining the modification?

cc:Mail for: Chuck Hayes

Subject: Degradation of Concrete Pipe Encasement
From: Rm Campbell 9/16/1996 13:30
To: Chuck Hayes
cc: Russell Nordstrom at MAILHUB
cc: Sharon Marra at MAILHUB
cc: Douglas Blue at MAILHUB

RE: Technical Review M-DCF-F-00596 dated 09/05/96
F-Area Tank Farm DB1 and Tanks 1-8 Waste Transfer Lines

Due to the degradation of the concrete encasement for sixteen (16) waste transfer lines from Diversion Box No. 1 to Tanks 1 through 8 (two lines for each tank) resulting in the loss of secondary containment, the encasement and lines will be abandoned in place. A structural assessment of the concrete encasement has been performed and abandonment recommended (ref.: SRT-MTS-94-2008 dated 23 March 1994, EPD-SE-94-0114 dated 04 May 1994, and HLW-HLE-94-0358 dated 08 June 1994).

These lines have not been used for waste transfers in several years, and F-Area Tank Farm management has no future plans to use the lines for either routine or emergency waste transfer operations. Currently, no field work is associated with this abandonment action.

If you need additional information, please let me know.

cc:Mail for: Chuck Hayes

W-0517

Subject: Re: ITP Tank 49 to 48 Transfer
From: Chuck Hayes 7/9/1996 06:44
To: Rm Campbell
cc: Sharon Marra at MAILHUB
cc: Martha Thompson at MAILHUB
cc: Douglas Blue at MAILHUB
cc: Cassandra Bayer at MAILHUB
cc: Kim Cauthen at MAILHUB
cc: Glenn Beaumier at SRCCH01

I concur with the one time transfer of wash water from Tank 49 to Tank 48 (approximately 170,000 gallons) using the modified routing described in your E-mail. However, any future use of the modified line and/or installation of a new line must meet all secondary containment requirements (including the need for an assessment) of the SRS Federal Facility Agreement. Also, if a leak occurs during the transfer, the notification and response actions mandated by the FFA must be undertaken.

Subject: ITP Tank 49 to 48 Transfer
From: Rm Campbell
Date: 7/8/1996 16:35

Chuck,

To follow-up on our telephone conversation earlier today with Cassie Bayer, the proposed temporary modification involves the transfer of approximately 170,000 gallons of wash water from Tank 49 directly into Tank 48 through the modification of underground transfer lines which would by-pass Diversion Box 7.

The major points of this transfer are summarized as follows:

* Due to potential safety analysis issues involving organics, Diversion Box 7 will be isolated and taken out of the transfer route.

* The transfer will then occur from one inerted tank directly into another inerted tank utilizing an existing spare nozzle stubout south of Tank 48.

* The wash water to be transferred has a nominal curie content of 0.001 curies per gallon, but far less than 0.05 curies/gallon.

* The transfer line for this operation is underground, although consideration was given to going above ground.

--The underground line routing and capping activities are required either way.

--The contents of Tank 48 are quite hot. To open a riser plug on the top of the tank would present another set of safety and health issues to be resolved.

--The underground line has secondary containment, however, it may not be pressure testable before the need date for this transfer. The

2

secondary containment will be made pressure testable as soon as practicable.

* Although there will not be a leak detection box associated with this transfer, verification of the transferred amount will be ascertained by the use of reel tapes in both tanks and by mass balance calculations.

Please let me know if you have any further questions on this matter or know of any reason the transfer under the temporary modification cannot proceed as planned.

Thanks for your help.

folder #5

Westinghouse
Savannah River Company

P.O. Box 616
Aiken, SC 29802

ESH-CGP-96-0207

April 24, 1996

Mr. C. E. Shealy, P.E., District Engineer
Lower Savannah District EQC
South Carolina Department of
Health and Environmental Control
218 Beaufort Street NE
Aiken, South Carolina 29801

Dear Mr. Shealy:

CONSTRUCTION PERMIT #17596-IW; PROFESSIONAL ENGINEER'S CERTIFICATION PACKAGE (U)

Please find attached a copy of the PE certification letter, pressure/leakage test results and as-built drawings for the Latewash Facility project (Construction Permit #17596-IW). A representative of the SRS Environmental Protection Department has conducted a satisfactory pre-final inspection of this unit. Based on the above, the SRS requests that your Office perform a final inspection and subsequently issue a Permit to Operate for the system.

Please contact me (725-8838) should you have any questions.

Very truly yours,

C. R. Hayes, Senior Engineer
CERCLA, Geological and Permitting Section
Environmental Protection Department

CRH:aeo
Attachment

cc: A. B. Gould, 703-47A

Letter, C. E. Shealy from C. R. Hayes
ESH-CGP-96-0207, April 24, 1996

bcc: *w/attachment
D. T. Bignell, 719-4A
J. R. Bozeman, 992-3W
J. Carroll, 704-3N
R. K. Cauthen, 704-15S
B. Damani, 704-15S
H. L. Davis, 703-47A
C. R. Hayes, 742-5A*
M. A. Hunter, 742-6G
J. T. Kato, 704-112S
M. S. Miller, 704-72S
J. F. Ortaldo, 704-S
W. L. Payne, 742-A
A. L. Towns, 703-47A
W. J. Vetsch, 512-11S
EPD Fileroom, 742-A
Records Administration, 773-52A*

Bechtel

Savannah River Site Construction
704-3N, Engineering Services
Aiken, SC 29808
Fax: (803) 557-5766

EPD-CES-96-0002

April 17, 1996

Ms. M. C. Reece, Director
Lower Savannah District
Environmental Quality Control
South Carolina Department of Health
and Environmental Control
218 Beaufort Street, NE
Aiken, South Carolina 29801

Dear Ms. Reece:

CERTIFICATION OF SCDHEC CONSTRUCTION PERMIT #17,596-IW
(PROJECT 1780): LATEWASH FACILITY (U)

I have inspected the Latewash Facility as described by the subject Construction Permit. Attached are as-built drawings of the facility and the SRS Federal Facilities Agreement (FFA) Assessment Report for those commodities contained in Section IX.B and Appendix B, Subsection B of the FFA. This project has been found to be, to the best of my knowledge, built in accordance with the approved plans and specifications with exception of punchlist items which do not affect the operability of the facility. These exceptions are noted in the Master Tracking System Database (MTS) which is available for review at the site.

Should you have any questions, please contact me at (803) 557-4662.

Very truly yours,

Joseph Carroll

Joseph Carroll, P.E.

4-17-96

SOUTH CAROLINA REGISTERED PROFESSIONAL ENGINEER No. 14028 JOSEPH CARROLL

JC:tab
Atch

cc: D. J. Amaral, 704-3N w/o
R. K. Cauthen, 704-15S w/o
N. F. Chapman, 704-99S w/o
B. R. Damani, 704-15S
W. T. Davis, 704-99S w/o
S. E. Day, 704-78S w/o
T. D. Grooms, 704-118S w/o
C. R. Hayes, 742-5A w/o
M. E. Howard, Jr., 704-72S w/o
J. T. Kato, 704-112S
R. D. Kowalski, 704-3N w/o
M. S. Miller, 704-72S
R. G. Perks, 704-39S w/o
S. K. Thomas, 704-72S w/o
W. J. Vetsch, 512-11S w/o
R. L. Yancey, 704-S w/o

CES FILE: 6208

REPORT

ASSESSMENT FOR LATE WASH FACILITY MODIFICATION (U)

96-LWF-004
Revision 0
April 1996

Executive Summary

The following Assessment Report is being submitted in order to satisfy the requirements of the Federal Facility Agreement (FFA). The purpose of this modification is to convert the Auxiliary Pump Pit into Late Wash Facility, to allow the washing of Nitrite from the precipitate stream for DWPF.

TABLE OF CONTENTS

I. Design Information....4

II. Waste Compatibility....4

III. Structural Integrity....4

IV. Leak Detection....5

V. Corrosion Protection....5

VI. Secondary Containment Determination....5

VII. Professional Engineer Certification....6

Attachment

I. DESIGN INFORMATION:

A design modification is required to convert the Auxiliary Pump Pit into the Late Wash Facility. A number of underground lines have been modified to support the conversion as shown in Attachment A. The lines to HDB8, to LPP, and from Tank 49 are existing lines that are not changed by this modification. Lines from the Cross Flow Filter and the Precipitate Tank are for recirculation of precipitate. Lines from the Hold Tank to the Laboratory and the line from the Back Pulse Tank to the Laboratory are for sampling. The line from the Cross Flow Filter to the Backpulse Tank and the line from the Backpulse Tank to the Hold Tank carry the filtrate produced by the Cross Flow Filter.

All of the above mentioned underground line jackets, with the exception of the recirculation lines to and from the Cross Flow Filter and Precipitate Tank, drain to existing leak detection boxes where instruments are located to detect the presence of fluid. The jackets of the recirculation lines to and from the Cross Flow Filter and Precipitate Tank drain to the Precipitate Cell sump where a leak detector is located.

Detailed design information for this piping shown on the attached Piping Plan is documented on the following design documents.

M-M5-S-0004	M-M6-S-0022
M-M5-S-0005	M-M6-S-0023
M-M6-S-0016	M-M6-S-0053
M-M6-S-0017	M-M6-S-0056
M-M6-S-0019	M-M6-S-0291
M-M6-S-0020	C-CX-S-0014

Pipe test pressure requirements are in accordance with the Product and Service Index (M-PSI-S-00001). The design standard used for piping is SRS Standard 15060-01-R.

The jacket pipe sections that are modified are coated in accordance with SRSESM 09900-05-R SRUG-40, SRUG-50 or SRUG-51 depending on the existing jacket piping coating system.

The Backpulse secondary containment structure was lined with Ceilcrete 6650-S by Master Builders.

II. WASTE COMPATIBILITY:

The constituents and characteristics of these waste were evaluated in the Phase II Assessment Report for the H-Area high level radioactive waste tank farms and are still valid for this modification.

III. STRUCTURAL INTEGRITY:

The Structural Integrity of the supports and the underlying liner plate and the concrete walls and floor has been evaluated and found to be adequate for these modifications. Detail design information is contained in the design documents for project S-1780(M).

IV. LEAK DETECTION:

The Filter Cell, Precipitate Cell, and Hold Tank Cell floors slope to sumps which have leak detection instruments. The modifications have no impact on these leak detection capabilities. The new drain lines have been sloped to existing leak detection boxes or allowed to drain into the stainless steel cell liners, where sump instruments will detect leaks. Leak detection is adequate to meet the standard set forth in Appendix B of the FAA.

V. CORROSION PROTECTION:

Corrosion resistant coatings, Gilsulate and cathodic protection are provided for jacket pipes. Corrosion evaluated stainless steel materials are provided for core pipes.

VI. SECONDARY CONTAINMENT DETERMINATION:

The jacket piping provides secondary containment and is subjected to a leak test prior to placement in service. Periodic pressure testing will be performed to ensure that the secondary containment is free of cracks or gaps. Documentation of leak tests performed are included in Attachment B. Liquid penetrant tests were performed on the mounted baseplates, nozzleboxes, and weld caps over the anchor bolt heads in order to verify the leak tightness between the baseplates and the cell liner plates.

VII. PROFESSIONAL ENGINEERING CERTIFICATION:

Design

To the best of my knowledge, information, and belief, this Assessment Report accurately describes and represents the modifications described herein. I further certify that to the best of my knowledge, information, and belief, the facility tie-ins including jacket and liner plate modifications have been designed in keeping with applicable engineering standards and to the requirements of Appendix B of the Federal Facility Agreement. These standards have been generally accepted as adequate in demonstrating leak tightness.

SOUTH CAROLINA
REGISTERED PROFESSIONAL ENGINEER
No. 13641
MARSHALL S. MILLER

Name: Marshall Miller

Number: 13641

Stamp

Construction and Installation

I have conducted an inspection, to the extent possible, of the installed tie-ins and liner plate modifications. Based upon the inspection and acceptable leak test documentation, I certify that to the best of my knowledge, information, and belief, the modifications to the liner plates and addition of tie-ins have been constructed in accordance with the approved design.

SOUTH CAROLINA
REGISTERED PROFESSIONAL ENGINEER
No. 14028
JOSEPH CARROLL

Joseph Carroll

Name:

Number: 14028

Stamp

ATTACHMENT A
96-LWF-004

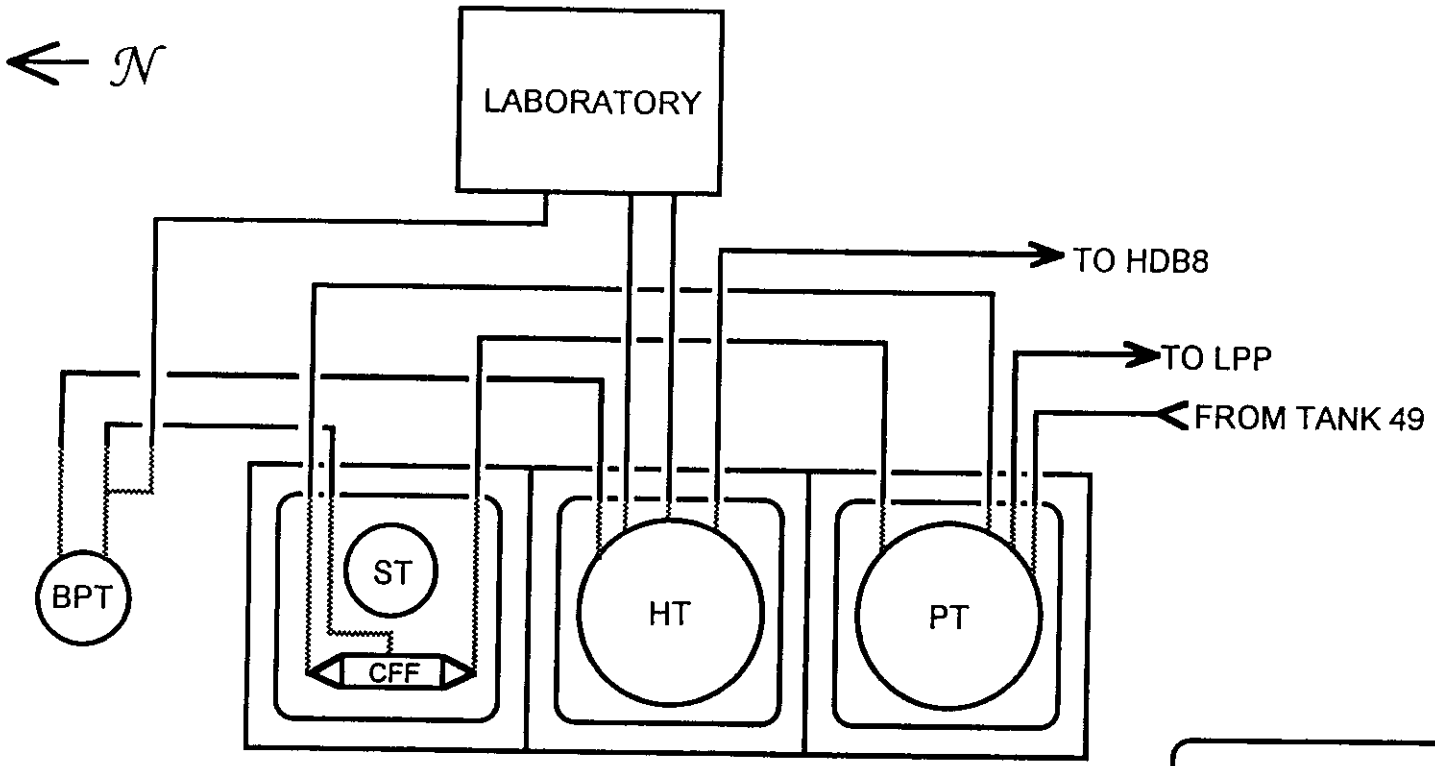

PIPING PLAN
LATE WASH MODIFICATION

LEGEND

UNDERGROUND JACKETED PIPE

ABOVE GROUND PIPE OR IN CELL JUMPER

BPT = BACK PULSE TANK

ST = SURGE TANK

CFF = CROSS FLOW FILTER

HT = HOLD TANK

PT = PRECIPITATE TANK

Folder 5 last

Westinghouse
Savannah River Company

P.O. Box 616
Aiken, SC 29802

ESH-CGP-96-0079

February 12, 1996

Ms. M. C. Reece, Director
Lower Savannah District EQC
South Carolina Department of
Health and Environmental Control
218 Beaufort Street NE
Aiken, South Carolina 29801

Dear Ms. Reece:

AS-BUILT DRAWINGS FOR IN-TANK PRECIPITATION (ITP) FACILITY (U)

Ref.: Letter, Dunaway to Richardson, 8/16/93

Per the referenced letter, SRS was to provide your office with modified drawings resulting in changes to the ITP facility since the permit to operate was issued on 3/3/93. The majority of facility modifications since 3/93 have been very minor in nature. As a result, no drawings that were provided to SCDHEC during the permitting process were in need of revision. Therefore, no as-built drawings will be submitted to your office for the ITP project.

For your information, the ITP facility initiated radioactive startup on October 18, 1995.

This matter has been discussed with Betsy Malpass of your Office. Please contact Chuck Hayes (725-8838) should you have any questions.

Very truly yours,

W D Dunaway

W. D. Dunaway, Senior Technical Leader
CERCLA, Geological and Permitting Section
Environmental Protection Department

CRH:aeo

cc: A. B. Gould, 703-47A

Letter, M. C. Reece from W. D. Dunaway
ESH-CGP-96-0079, February 12, 1996

bcc: D. T. Bignell, 719-4A
D. M. Blue, 742-6G
J. R. Bozeman, 992-3W
J. W. Cook, 742-A
H. L. Davis, 703-47A
C. R. Hayes, 742-5A
W. L. Payne, 742-A
C. B. Stevens, 742-6G
Records Administration, 773-52A
EPD Fileroom, 742-A

Per your request, Jeff, this is to supply you something preliminary to go to the state with in order to get the acceptance on the Tank 17 transfer, and this is to inform everyone else on the path being pursued. We will be transferring a total of approximately 280,000 gallons (79 inches) of tritiated waste out of Tank 17. As firm as it is now, the thoughts are to first transfer about 260,000 gallons of the tritiated waste water, mostly supernate, from Tank 17 to Tank(s) 5 and/or 6 using a larger capacity submersible pump and the double encased flexible hose. Prior to this transfer, Tank(s) 5 and/or 6 will need to be sufficiently inhibited to 1M HaOH (quantity to be determined) and some tank commodities will need to be in an operational status as prerequisites to the transfer (equipment to be determined). Upon completion of the transfer(s) to the Type I tank(s), the remaining liquid and sludge, the tank heel, will have to be pumped from Tank 17 to Tank 18 using a similar arrangement to the pump set-up we are now using on the Tank 20 to Tank 18 transfer. The pump in this arrangement will allow removal of most of the remaining liquid in Tank 17. The pump used in the transfer to the Type I tank(s) does not allow for sucking off of the tank bottom. For the Tank 17 to Tank 18 transfer, future Tank 18 transfers and chemistry have been already taken into consideration with the inhibitor addition prior to the Tank 20 transfer, so no further chemical additions are anticipated for Tank 18.

The pumping set-up for the initial transfer(s) from Tank 17 to Tank(s) 5 and/or 6 of the 260,000 gallons of waste water will use a larger capacity pump due to the length of the transfer path, approximately 500 feet. The same type of hose within a hose (double encased) will be used for the above ground transfer media. A special procedure in conjunction with two temporary modifications will govern the evolution, similar to the Tank 20 to Tank 18 transfer. The pump will be lowered through the NE riser in Tank 17 where the pump will probably be on its side but the pump will rest on the bottom of the tank. A 1" nominal diameter flexible EPDM hose will be used as the transport line. The primary hose will be sleeved within a 2" reinforced flexible PVC line as secondary containment for areas outside the tank interiors. The transfer line will be routed from the pump discharge to Tank 6 initially, the farthest tank, if transferring to both of the Type I tanks. Upon the completion of the transfer volume determined for delivery to Tank 6, the hose will be drained, cut and the end of the hose placed in Tank 5. The extra hose will be disposed of properly (to be determined). If we determine that we will only transfer Tank 17 to Tank 5, then the hose will be initially placed in Tank 5. With the type of pump we are looking at, we will probably not be able to pump Tank 17 down to less than a half of an inch with this transfer method. In which case, we will complete that special procedure, which will cover disposal (method to be determined) of this pump and hose used for the Tank 17 to Tank(s) 5 and/or 6. We will have a second procedure and set of temporary modifications to cover the Tank 17 to Tank 18 transfer. The arrangement here will be exactly like the Tank 20 to Tank 18 set-up to transfer the remain heel, 20,000 gallons, in Tank 17 also to Tank 18, center riser. Nothing really new here. The special procedure will be exactly like the SP-046 and disposal will be back into Tank 17.

If you need more information, please contact Tommy or myself. If things change or as everything starts coming together, Tommy or I will let you know. Mark

INTER-OFFICE MEMORANDUM
Savannah River Site

09-Nov-1995 02:08pm EST

To: Chuck Hayes (HAYES-CR-Z9722)

CC: CARY B. STEVENS (STEVENS-CB-O5981 @A1@SASRS2)
CC: Matthew A. Hunter (HUNTER-MA-L2335 @A1@SASRS2)

From: Theodore G. Wineteer (WINETEER-TG-Y5359)
Dept: DE E&PD
Tel : (803)557-6416

Replacement High Level Waste Evaporator (U)

For the 242-25H evaporator, a BCP (Baseline Change Proposal) has been sent to DOE - HQ. They are concerned that the construction complete date in the permit is 1/1/98 and the operational date in the BCP is 3/1/99. The actual construction complete date is scheduled for 10/1/97.

What is your recommendation?

As we discussed, you felt that it was not necessary or advisable to change the date at this time. We might notify SCDHEC in the quarterly meeting that the schedule for operation was 3/1/99. Also you felt that it would not be a major problem to change the date. Please confirm this.

Also please comment on the timing of obtaining operating permits from SCDHEC and the status of the projects, such as ITP and DWPF.

The project has requested that we obtain this information in writing from you.

INTER-OFFICE MEMORANDUM
Savannah River Site

13-Nov-1995 08:26am EST

To:	Theodore G. Wineteer	(WINETEER-TG-Y5359)
CC:	CARY B. STEVENS	(STEVENS-CB-O5981 @A1@SASRS2)
CC:	Matthew A. Hunter	(HUNTER-MA-L2335 @A1@SASRS2)
From:	Chuck Hayes	(HAYES-CR-Z9722)
Dept:	EPD	
Tel :	7258838	

RE: Replacement High Level Waste Evaporator (U)

Since construction is scheduled for completion on 10/1/97, we have a couple of options. One, we can put together a certification package, perform the DHEC final inspection and receive a permit to operate prior to conducting "cold runs". We did this with both DWPF and ITP. Conversely, we can keep DHEC abreast of the startup schedule (through quarterly meetings) and formally request an extension to the 1/1/98 date at a later time.

My personal preference is to obtain operating approval (permit) upon construction completion and prior to cold runs. I see no downside to utilizing this option.

INTER-OFFICE MEMORANDUM
Savannah River Site

26-Sep-1995 02:17pm EST

To: See Below

From: Bill Payne (PAYNE-WL-Y7708)
Dept: EPD/ESH&QA
Tel : 7257312

RE: Use of HIC for temporary storage of basin settler sludge

This memorandum is to confirm your concurrence that use of a High Integrity Container (HIC) for temporary 100-Area storage of disassembly basin filter backwash settling tank sludge does not require a SCDHEC permit.

As we discussed, the K-, L- and P- Basin settling tanks are full and the L-Basin sludge level is above the supernatant return outlet. Some sludge must soon be removed to retain the basin clarity needed for reactor fuel storage activities and to ensure excellent basin water quality.

The sludge trailer, for transport of this SCDHEC permitted wastewater stream to HLW tank 47, is full and is no longer suitable for future routine transport. The purchased direct replacement trailer requires repair before it can be used. Also, tank 47 may no longer be the best disposal option and time is needed to select and permit an alternative.

Four HIC suitable for dewatering and temporary storage of the sludge are being purchased. To achieve maximum sludge storage capacity, excess water will be returned to the settler via the internal HIC dewatering decanter/filter tubing. Data, that could be used for a future HIC wastewater treatment permit application and for E-Vault waste acceptance criteria, will be obtained.

However, present information indicates that the sludge temporarily stored in the HIC will most likely be slurried and emptied directly to a wastewater treatment facility, emptied to the trailer for that transport, or returned to the settling tanks. If the HLW tank's wastewater treatment permit does not specify the trailer and unloading system, SCDHEC approval is not required for use of the HIC to transport the sludge to tank 47. If not emptied to tank 47, SCDHEC approval will be required for disposal via other wastewater sludge treatment/disposal alternatives.

Please reply by October 2. Thank you for the prompt guidance.

EPD RESPONSE

EPD concurs with temporary storage of DA Basin sludge in HICs (as described above) until a final disposal scheme can be determined. This concurrence is based on the following:

- **the sludge is not hazardous (mixed waste; if it is, please contact Monte Hawkins or another EPD RCRA expert for advice);**

- **before disposal of the sludge by any other method than to Tank 47, DHEC approval will be obtained (since Tank 47 is currently the permitted method of disposal);**

- **spill protection through adequate Best Management Practices will be implemented during storage;**

- **the HICs will be utilized for storage only and not for treatment;**

- **final treatment/disposal of the sludge will be provided in a reasonable period of time.**

Distribution:

To:	H. Lee Martin	(MARTIN-HL-03230)
CC:	John N. Dewes	(DEWES-JN-Y6384 @A1@SRXSS2)
CC:	Frank R. Weitz	(WEITZ-FR-B4662)
CC:	Betsy L. Westover	(WESTOVER-BL-09045 @A1@SRXSS2)
CC:	DAVE FREEMAN	(FREEMAN-DW-07103 @A1@SRXSS2)
CC:	Steve R. Smith	(SMITH-SR-L1493 @A1@SRXSS2)
CC:	PERJETTA SMITH	(SMITH-PK-08266 @A1@SRXSS2)
CC:	Joseph Rideaux	(RIDEAUX-J-L4672 @A1@SASRS2)
CC:	Wayne R. Lindenberger (LINDENBERGER-WR-08917 @A1@SRXSS2)	
CC:	James L. Hendrix	(HENDRIX-JL-04985 @A1@SRXSS2)
CC:	John E. Marra	(MARRA-JE-T8085)
CC:	Chuck Hayes	(HAYES-CR-Z9722)
CC:	John L Keyes	(KEYES-JL-08263)

INTER-OFFICE MEMORANDUM
Savannah River Site

07-Sep-1995 02:23pm EST

To: Chuck Hayes (HAYES-CR-Z9722 AT A1 AT SLSRP1)

CC: Douglas M. Blue (BLUE-DM-L4808 @A1@SASRS2)
CC: CARY B. STEVENS (STEVENS-CB-O5981 @A1@SASRS2)

From: Douglas M. Blue (BLUE-DM-L4808 AT A1 AT SASRS2)
Dept: HLWEC
Tel : 8035578088

RE: ITP STARTUP (U)

Chuck...

1. We are playing DOE/WSRC politics...

ITP began adding chemicals (1 of 7 tanker trucks) on Saturday. Chemical additions will take approximately 1 month. We have contacted DHEC, with the names of those people you requested, that benzene emissions will commence on August 31, 1995. (So we were off a few days...) From an EPA perspective, this is not radioactive operations.

2. We are going to notify EPA of radioactive processing (this week)...

ITP is tentatively scheduled to begin radioactive processing of material on October 16, 1995. Radioactive processing, from an EPA perspective, is the processing of material through the filter and stripper buildings.

3. No changes at ITP have occurred...

I believe I have previously stated that no changes have occurred to the ITP process that change the drawings contained in the wastewater permit application. I recommend that we proceed with a letter to the state stating such. I'll be happy to help draft or review the letter. Along the same lines, it may be advantageous to forego any contact with the state.

I believe this will address your concerns...

Page me at 2651 if you have any questions.

W-0517

Westinghouse
Savannah River Company

ESH-ESS-95-0347

August 23, 1995

TO: R. K. CAUTHEN, 704-15S

W. L. Payne

FROM: W. L. PAYNE, 742-A
(x5-7312)

RECLASSIFICATION OF HLW WASTEWATER TREATMENT PLANTS (U)

Ref: Letter, W. L. Payne to M. G. Vickers, 6/26/95

Attached is a letter from the Industrial & Agricultural Wastewater Division of SCDHEC reclassifying certain wastewater treatment plants so as to remove their certified operator requirements.

It is critical to understand what reclassification actually means. Operators at these plants are no longer required to carry South Carolina physical/chemical wastewater licenses to perform their duties; however, all regulatory and permitting requirements required for Clean Water Act permitted facilities still apply and must be adhered to. For example:

- log books must continue to be maintained in the control rooms at all facilities,
- operators should continue to make daily entries into the log books and certify the entries with their signature,
- operators should continue holding routine daily inspections, and
- operators should continue to receive appropriate facility specific training.

If you have any questions regarding this letter and exactly how it applies to these facilities, please feel free to call me at any time.

WLP
Attachment

CC: H. L. Davis, 703-47A
A. L. Towns, 703-47A
J. S. Roberts, 742-A
T. J. Lex, 719-4A
M. D. Dukes, 742-A
D. T. Bignell, 719-4A
D. B. Amerine, 704-S
G. T. Wright, 703-H
J. L. Keyes, 742-A
W. D. Dunaway, 742-5A
J. R. Bozeman, 992-3W
C. B. Stevens, 742-6G
C. R. Hayes, 742-5A
B. R. James, 992-3W
Records Administration, 773-52A

South Carolina
DHEC
Department of Health and Environmental Control
2600 Bull Street, Columbia, SC 29201

Commissioner: Douglas E. Bryant

Board: John H. Burriss, Chairman
William M. Hull, Jr., MD, Vice Chairman
Roger Leaks, Jr., Secretary

Richard E. Jabbour, DDS
Cyndi C. Mosteller
Brian K. Smith
Rodney L. Grandy

Promoting Health, Protecting the Environment

August 14, 1995

RECEIVED
AUG 21 1995

Mr. W. L. Payne, Principal Scientist
Surface Water, Wetlands, and Land Protection Group
Environmental Protection Department
Westinghouse Savannah River Company
Bldg. 742-A
Aiken, SC 29802

RE: Wastewater Treatment Plant Classification for Specialized Facilities at SRS
SRS/General
Aiken County

Dear Mr. Payne:

This Office has reviewed your request for reclassification of specialized nuclear waste storage, transfer, handling, and stabilization facilities to remove certified operator requirements. Based on the nature of the operations at these facilities, this Office agrees that certified wastewater treatment plant operators are not required for these nuclear waste facilites.

Therefore, this letter hereby modifies the following construction permits to remove the given classifications for the noted facilities:

Facility	Permit #	Classification	Operator
H-Area Tank 50	14,520	N/A	N/A
F&H Area Process Sewers	14,624	N/A	N/A
H to Z Area Transfer Line	14,338	N/A	N/A
DWPF Vitrification	16,783	N/A	N/A
Latewash Facility	17,596-IW	N/A	N/A
Z-Area Saltstone	12,683-IW	N/A	N/A
F&H Tank Farms including H to S area Transfer Line and DWPF Low Point Pump Pit	17,424-IW	N/A	N/A

Should you have questions or comments, please contact Melinda Vickers of my staff at (803) 734-0819.

Sincerely,

Marion F. Sadler, Jr., Director
Industrial and Agricultural Wastewater Division

MFS/mgv
cc: Lower Savannah EQC

W-0517

INTER-OFFICE MEMORANDUM
Savannah River Site

24-Jul-1995 02:01pm EST

To: See Below

From: Matthew A. Hunter (HUNTER-MA-L2335 AT A1 AT SASRS2)
Dept: HLW Env Compl
Tel : 557-6416

Draft of Tank Farm Closure Whitepaper (U)

Sorry, the first one was sent out by mistake. I've heard very little out of you guys since I last sent out my request. So to speed up the process, I've gone ahead and drafted language for each of the sections. Right or wrong, they're out there. I hope this will help generate some comments. Please look over the attached. I will contact each of you to set up a time to later this or early next.

=) Happy Reading

Distribution:

To: Jeffry L. Newman (NEWMAN-JL-L2846 @A1@SLSRP1)
To: Michael J. Hagenbarth
(HAGENBARTH-MJ-L2326 AT A1 AT SASRS2)
To: Chuck Hayes (HAYES-CR-Z9722 @A1@SLSRP1)

CC: Michele N. Wells, 719-4A (WELLS-MN-O8745 AT A1 AT SASRS2)
CC: Daniel G. Wells (WELLS-DG-B7423 @A1@SLSRP1)
CC: Michele Pence Wilson (WILSON-MP-O9242 @A1@SLSRP1)
CC: John K. Reed (REED-JK-L4309 AT A1 AT SASRS2)
CC: Ann R. Gough (GOUGH-AR-Y5417 @A1@SLSRP1)

Introduction - Waste Removal Folks

The SRS High Level Waste Tanks and associated facilities (evaporators, pump pits, diversion boxes, transfer lines, etc.) are permitted under a SCDHEC wastewater construction permit and operated under a SCDHEC wastewater permit-to-operate. The facilities were removed from RCRA Interim Status with the issuance of the wastewater permit-to-operate in March, 1993.Per the SRS Federal Facility Agreement, a plan and schedule for waste removal has been submitted to SCDHEC for approval.

History of Waste Removal

Current scope of cleaning

Cleaning of Tank 16

Amount of Cleaning w/ one water wash

Regulatory Applicability

NEPA - Jeff Newman/Mike Hagenbarth

The National Environmental Protection Act requires that actions undertaken by Federal agencies be screened for environmental impacts prior to intiation of the action. The waste removal projects have been reviewed under previous Environmental Impact Statements. However, the closure and disposal of the tank farm itself has not been reviewed for environmental insults. Therefore, an Environmental Evaluation Checklist should be submitted to evaluate the level of NEPA review required.

FFA (RCRA/CERCLA) - Beth

Under the Federal Facility Agreement, which integrated the closure processes of both the Resource Conservation and Recovery Act and the Comprehensive Environmental Remediation, Compensation and Liability Act, the tank systems will be closed under a Wastewater Closure Plan. Once closed, the tank systems will be turned of the the Environmental Restoration Division and any further remediation will be completed prior to final closure of the tank farms.

RCRA Closure (Solid Waste [1H/Chem Tanks, Pump Houses]) - Beth

Due to the hazardous nature of the waste being handled in the tank farms, auxillary equipment and support facilities have become contaminated. Prior to final closure, the equipment and facilities will be evaluated in a RCRA closure plan.

Wastewater - Chuck

It is the intent to complete waste removal (to the extent possible), either completely or in clusters of units, under the wastewater permit-to-operate. At such time waste removal is complete (either completely or in part), a wastewater closure plan(s) must be submitted to SCDHEC for review and approval, per SC Regulation R.61-82. The extent of closure activities that can occur under R.61-82 will likely be limited to those

activities (if any) that fall outside RCRA Closure jurisdiction. If RCRA were to yield for some reason, it is conceivable that the entire closure process could be conducted under an approved wastewater closure plan(s).

NRC - Ann

The regulations promulgated by the Nuclear Regulatory Commission have been reviewed for their applicability to the closure of the tank farms. Based on the constituents in the waste being processed in the tank farms, the tank farms will not fall within the authority of the NRC. Therefore, these regulations will not impact the closure of the tank farms.

Land Use - Michele Wilson

The future Land Use of the Savannah River Site reservation is vitally important in determining the extent to which the tank farms must be Decommissioned and Decontaminated. If the site will remain under industrial institutional control, the tank farms will be D&D'ed to a far lesser extent. If, however, the entire site is to used for residential/agricultural purposed, the tanks may have to be removed and disposed of in vault systems.

Groundwater - Dan Wells

Due to previous releases to the environment, the groundwater in the tank farm areas has been contaminated. Subsequent to final closure, groundwater monitoring wells will be installed to track the migration of the contamination plumes per the CERCLA/RCRA regulations. Depending on the severity of the contamination levels, remediation of the ground water may be necessary.

Proposed D&D Regs - Ann/Michele Wilson

Proposed Pathforward - Me

Name Responsible Org
Complete NEPA
Timing Needs
Cost vs. Risk Analysis

Westinghouse
Savannah River Company

ESH-ESS-95-0247

June 26, 1995

Ms. M. G. Vickers, Engineer
Industrial and Agricultural Wastewater Division
South Carolina Department of Health
and Environmental Control
2600 Bull Street
Columbia, SC 29201

Dear Ms. Vickers:

WASTEWATER TREATMENT PLANT (WWTP) CLASSIFICATION FOR SPECIALIZED FACILITIES AT SRS (U)

WSRC requests that SCDHEC reclassify each of the WWTPs discussed in this letter so that a graded operator is not required. We believe this request is justified based upon the following reasons:

- A letter from Mr. B. Ruiter (SCDHEC) to Mr. R. Whitfield (DOE) in March of 1985 stated that "SCDHEC may classify some treatment facilities so a graded operator is not required" (attachment 1).

- All SRS employees who will operate these WWTPs have received, and will continue to receive in the future, extensive training in the processes they are operating. Since all of these facilities are nuclear in nature, employee training far exceeds the number of hours required to be a certified operator in the State of South Carolina (see attachment 2 for training outlines typical to all the facilities discussed in this letter).

- Section 48-1-110 (b) of the South Carolina Pollution Control Act does not classify vitrification (DWPF), storage of high level radioactive waste (Tank Farm), and solidification (Saltstone), as types of treatment requiring a graded operator.

- Vitrification, solidification, storage of high level radioactive waste, and in-tank precipitation are unique methods of wastewater treatment that are not covered in typical physical/chemical wastewater training programs; therefore, completing such a program will not certify that operators are capable of performing their duties - a fact that is in direct opposition to the intent of the Certified Operator Program.

- All of these WWTPs "pretreat" wastewater prior to ultimate disposal either within Saltstone Vaults, DWPF Interim Storage Facilities, or the Effluent Treatment Facility (ETF). ETF provides thorough treatment prior to discharge at a permitted NPDES outfall (H-016) and has a Group IV physical/chemical wastewater classification requiring the presence of an "A" level certified operator.

2

Specifically, we request that SCDHEC provide SRS with a letter reclassifying to "0" the following facilities:

Facility	Permit #	Current Classification
F&H Tank Farms	17,424-IW	Group IV - P/C
H-Area Tank 50	14,520	Group III - P/C
F & H Area Process Sewers	14,624	Group IV - P/C
H to Z Area Transfer Line	14,338	Group III - P/C
DWPF Vitrification	16,783	Group IV - P/C
Latewash Facility	17,596-IW	Group III - P/C
Z -area Saltstone	12,683-IW	Group II - P/C
H to S Interarea Transfer Line inc. DWPF Low Point Pump Pit	17,424-IW	Group III - P/C

Thank you for your help with this matter. If you have any questions, please call me at (803) 725-7312.

Yours truly,

W. L. Payne

W. L. Payne, Principal Scientist
Surface Water, Wetlands, & Land Protection Group
Environmental Protection Department

WLP:dkc
Attachments

CC: A. B. Gould, DOE-SR, 703-47A
M. C. Reece, SCDHEC-Aiken

3

BCC: H. L. Davis, 703-47A
A. L. Towns, 703-47A*
J. S. Roberts, 742-A*
T. J. Lex, 719-4A*
M. D. Dukes, 742-A*
D. T. Bignell, 719-4A*
D. B. Amerine, 704-S*
G. T. Wright, 703-H*
J. L. Keyes, 742-A*
W. D. Dunaway, 742-5A*
J. R. Bozeman, 992-3W*
R. K. Cauthen, 704-15S*
C. B. Stevens, 742-6G*
C. R. Hayes, 742-5A*
B. R. James, 992-3W*
Records Administration, 773-52A
*w/o Attachments

INTER-OFFICE MEMORANDUM
Savannah River Site

21-Jun-1995 02:08pm EST

To: Elizabeth B. DeWitt (DEWITT-EB-L2262 AT A1 AT SASRS2)
To: Michele Pence Wilson (WILSON-MP-O9242 @A1@SLSRP1)
To: Ann R. Gough (GOUGH-AR-Y5417 @A1@SLSRP1)
To: Chuck Hayes (HAYES-CR-Z9722 @A1@SLSRP1)
To: Michael J. Hagenbarth
(HAGENBARTH-MJ-L2326 AT A1 AT SASRS2)

From: Matthew A. Hunter (HUNTER-MA-L2335 AT A1 AT SASRS2)
Dept: HLW Env Compl
Tel : 557-6416

HLW Tank Closure White Paper (U)

I have been trying to delay this arduous task for as long as possible. But, now is finally the time for me to try to make some inroads toward putting something on the street that people can take pot shots at. In order to do this, I need a little help from my friends.

I have a rough outline that I'd like comments on. It is as follows:

Introduction - Waste Removal Folks
- History of Waste Removal
- Current scope of cleaning
- Cleaning of Tank 16
- Amount of Cleaning w/ one water wash

Regulatory Applicability
- NEPA - Me/Mike Hagenbarth
- FFA (RCRA/CERCLA) - Beth
- RCRA Closure (Solid Waste [1H/Chem Tanks, Pump Houses]) - Beth
- Wastewater - Chuck
- NRC - Ann
- Land Use - TBD
- Groundwater - TBD
- Proposed D&D Regs - Ann/Michelle

Proposed Pathforward - Me
- Name Responsible Org
- Complete NEPA
- Timing Needs
- Cost/Risk Analysis

In the sections that I've noted, I'm trying to pull together a short one or two paragraph statement on the applicability and requirements for area. If I can impose, I'd each of you to pen these. Since this is obviously not a particularly hot topic, I would like to get something pulled together by the middle of July.

Thanks in advance. Hope this isn't a lot of work. Let me know if I can help. All-in-ones are fine.

INTER-OFFICE MEMORANDUM
Savannah River Site

20-Jul-1995 08:18am EST

To: Matthew A. Hunter (HUNTER-MA-L2335 AT A1 AT SASRS2)

From: Chuck Hayes (HAYES-CR-Z9722)
Dept: EPD
Tel : 7258838

RE: HLW Tank Closure White Paper (U)

Sorry it has taken me a month to respond, but here is what I think you want. I will focus on **closure** since I think that is what you are looking for. Let me know if you have questions or need more info.

WASTEWATER

The SRS High Level Waste Tanks and associated facilities (evaporators, pump pits, diversion boxes, transfer lines, etc.) are permitted under a SCDHEC wastewater construction permit and operated under a SCDHEC wastewater permit-to-operate. The facilities were removed from RCRA Interim Status with the issuance of the wastewater permit-to-operate in March, 1993.

Per the SRS Federal Facility Agreement, a plan and schedule for waste removal has been submitted to SCDHEC for approval. It is the intent to complete waste removal (to the extent possible), either completely or in clusters of units, under the wastewater permit-to-operate. At such time waste removal is complete (either completely or in part), a wastewater closure plan(s) must be submitted to SCDHEC for review and approval, per SC Regulation R.61-82. The extent of closure activities that can occur under R.61-82 will likely be limited to those activities (if any) that fall outside RCRA Closure jurisdiction. If RCRA were to yield for some reason, it is conceivable that the entire closure process could be conducted under an approved wastewater closure plan(s).

WESTINGHOUSE SAVANNAH RIVER COMPANY

INTER-OFFICE MEMORANDUM

ESH-CGP-95-0283

June 27, 1995

TO: M. A. HUNTER, 703-7C

FROM: C. R. HAYES, 742-5A
(X5-8838)

SCDHEC APPROVAL OF REPLACEMENT HIGH LEVEL WASTE EVAPORATOR (RHLWE) OVERHEAD LINE INSTALLATION (U)

Attached is a copy of the SCDHEC letter approving of installation of the RHLWE Overhead Line and associated transfer pumps. Please be aware that this approval was based on review of the permit application package submitted to SCDHEC on 5/30/95. Deviation from the plans outlined in the 5/30/95 package will require further SCDHEC review and approval.

Once construction of the overheads transfer system is complete, please contact me to schedule an inspection. Also contact me if there are any questions regarding this letter.

CRH:aeo
Attachment

CC: w/attachment

C. J. Boasso, 704-60H
J. L. Brantley, 241-84H
D. T. Bignell, 719-4A
J. W. Cook, 742-A
R. A. Delcastilho, 742-2G
L. G. Lawson, 241-84H
W. L. Payne, 742-A
C. B. Stevens, 742-6G
A. L. Towns, 704-S
R. W. Wilson, 742-2G
Records Administration, 773-52A
J. R. Bozeman, 992-3W
D. C. Bumgardner, 742-4G
J. Carroll, 717-9N
H. L. Davis, 703-47A
W. D. Dunaway, 742-5A
D. G. Martin, 742-4G
R. M. Satterfield, 719-4A
C. L. Todaro, 742-6G
A. W. Wiggins, 241-84H
G. T. Wright, 241-120H
EPD Fileroom, 742-A

South Carolina
DHEC
Department of Health and Environmental Control
2600 Bull Street, Columbia, SC 29201

Commissioner: Douglas E. Bryant

Board: John H. Burriss, Chairman
Sandra J. Molander, Secretary

Richard E. Jabbour, DDS
William M. Hull, Jr., MD
Roger Leaks, Jr.

Promoting Health, Protecting the Environment

June 14, 1995

Mr. W. D. Dunaway
Westinghouse Savannah River Company
Permitting Field Support Group
Environmental Protection Division
P. O. Box 616
Aiken, SC 29802

RE: Construction Permit #17,424-IW Modification
SRS/H-Area
Aiken County

Dear Mr. Dunaway:

This Office has reviewed of your May 30, 1995 submittal for modification to Construction Permit #17,424-IW for the F/H Area High Level Radioactive Tank Farms. Approximately 1200 linear feet of jacketed 2-inch process piping and two 50 gpm transfer pumps will be installed to convey wastewater from the overhead receiver tanks to an existing manhole which leads to the F/H ETF. The addition of this equipment is hereby approved.

Should you have questions or comments, please contact me at (803) 734-0819.

Sincerely,

Melinda G. Vickers

Melinda G. Vickers
Environmental Engineering Associate
Industrial and Agricultural Wastewater Division

mgv

cc: Lower Savannah EQC

recycled paper

INTER-OFFICE MEMORANDUM
Savannah River Site

02-Jun-1995 12:46pm EST

To: See Below

From: Chuck Hayes (HAYES-CR-Z9722)
Dept: EPD
Tel : 7258838

RE: PERMITTING ACTIONS REQUIRED PRIOR TO RADIOACTIVE OPS (U)

AGREED! Thanks for looking into it.

Distribution:

To: Douglas M. Blue (BLUE-DM-L4808 AT A1 AT SASRS2)

CC: Chuck Hayes (HAYES-CR-Z9722 AT A1 AT SLSRP1)
CC: Douglas M. Blue (BLUE-DM-L4808 @A1@SASRS2)
CC: W. DANNY DUNAWAY
(DUNAWAY-WD-O7436 AT A1 AT SLSRP1)
CC: CARY B. STEVENS (STEVENS-CB-O5981 @A1@SASRS2)
CC: Anthony L Towns (TOWNS-AL-A9389 @A1@SASRS3)

INTER-OFFICE MEMORANDUM
Savannah River Site

02-Jun-1995 10:34am EST

To: Chuck Hayes (HAYES-CR-Z9722 AT A1 AT SLSRP1)

CC: Douglas M. Blue (BLUE-DM-L4808 @A1@SASRS2)
CC: W. DANNY DUNAWAY
(DUNAWAY-WD-O7436 AT A1 AT SLSRP1)
CC: CARY B. STEVENS (STEVENS-CB-O5981 @A1@SASRS2)
CC: Anthony L Towns (TOWNS-AL-A9389 @A1@SASRS3)

From: Douglas M. Blue (BLUE-DM-L4808 AT A1 AT SASRS2)
Dept: HLWEC
Tel : 8035578088

RE: PERMITTING ACTIONS REQUIRED PRIOR TO RADIOACTIVE OPS (U)

I will provide you with a draft copy of the start-up notification letter. Please feel free to add any names to the list you desire.

Also, I have reviewed the drawings contained in the wastewater permit application. No changes to the facility have occured which impact the drawings. I don't feel we need to provide updated (the same) copies to DHEC... Agree?

2

INTER-OFFICE MEMORANDUM
Savannah River Site

01-Jun-1995 08:45am EST

To:	Douglas M. Blue	(BLUE-DM-L4808 @A1@SASRS2)
CC:	W. DANNY DUNAWAY	(DUNAWAY-WD-O7436)
CC:	CARY B. STEVENS	(STEVENS-CB-O5981 @A1@SASRS2)
CC:	Anthony L Towns	(TOWNS-AL-A9389 @A1@SASRS3)
From:	Chuck Hayes	(HAYES-CR-Z9722)
Dept:	EPD	
Tel :	7258838	

PERMITTING ACTIONS REQUIRED PRIOR TO RADIOACTIVE OPS (U)

Recently we discussed the impending start-up of ITP. Apparently we are readying ourselves to officially notify EPA of this milestone. Please remember that I would like to have input in the letter so that our SCDHEC counterparts can be kept in the loop.

Also, I sent you an IOM on 3/22/95 relative to our commitment to provide DHEC with as-built drawings resulting from changes to the ITP process since the Permit-to Operate was issued. Please respond to my 3/22 request, as it appears the time is fast approaching.

W-0517

INTER-OFFICE MEMORANDUM
Savannah River Site

22-Mar-1995 02:43pm EST

To:	Douglas M. Blue	(BLUE-DM-L4808 @A1@SASRS2)
To:	Bharat R. Damani	(DAMANI-BR-Y4387 @A1@SASRS2)
CC:	R. Kim Cauthen	(CAUTHEN-RK-L3117 @A1@SASRS2)
CC:	W. DANNY DUNAWAY	(DUNAWAY-WD-O7436)
CC:	CARY B. STEVENS	(STEVENS-CB-O5981 @A1@SASRS2)
From:	Chuck Hayes	(HAYES-CR-Z9722)
Dept:	EPD	
Tel :	7258838	

PERMITTING ACTIONS REQUIRED PRIOR TO RADIOACTIVE OPS (U)

Just a friendly reminder. Since ITP and/or DWPF radioactive startup is scheduled to occur late '95/early '96, I thought now is not to early to remind you of the additional actions required per your respective wastewater permits. If you recall, in 10/93, SCDHEC approved of our plan to make minor equipment modifications at both ITP and DWPF without their prior approval. However, we agreed to provide them (prior to rad ops) with any "as-built" drawings (which were provided to SCDHEC during the permitting process) that require revision as a result of making minor changes.

Please check with your design/construction contacts to make sure this activity is being tracked (and is on track). I would hate to see a situation where we are ready to "throw the switch" but we don't have our paperwork in order.

Thank you in advance for your cooperation.

Westinghouse
Savannah River Company

P.O. Box 616
Aiken, SC 29802

ESH-ERG-95-0216

May 30, 1995

Ms. M. G. Vickers, Engineering Associate
Industrial and Agricultural Wastewater Division
South Carolina Department of Health
and Environmental Control
2600 Bull Street
Columbia, South Carolina 29201

Dear Ms. Vickers:

REPLACEMENT OF THE 242-16H EVAPORATOR POT (U)

Ref.: Construction Permit #17424-IW

In order to support future processing needs in the H-Area High Level Waste Tank Farm, SRS intends to replace the 242-16H Evaporator pot. The pot has not failed, however, it has reached the end of its design life. The SRS feels this replacement falls under the "normal operations" category (Section 4.2 of the referenced permit application package) and, thus does not require permit modification. Attached for your information is the specification for the replacement pot. Please replace Table 7-21 (Page 261) in your copies of the referenced construction permit application package with the attached specification.

Please contact Chuck Hayes (803/725-8838) if you have any questions or require additional information.

Yours very truly,

W. D. Dunaway, Sr. Technical Leader
Permitting Field Support Group
Environmental Protection Department

CRH:aeo
Attachment

CC:
M. F. Sadler, SCDHEC
M. C. Reece, SCDHEC, Lower Savannah District
A. B. Gould, 703-47A (2)

Letter, M. G. Vickers from W. D. Dunaway
ESH-ERG-95-0216, May 30, 1995

BCC:

* w/attachment
D. T. Bignell, 719-4A
J. R. Bozeman, 992-3W
M. A. Ceravolo, 707-H
J. W. Cook, 742-A
H. L. Davis, 703-47A *
C. R. Hayes, 742-5A *
M. A. Hunter, 703-7C *
W. D. Lanham, 707-H
T. M. Monahon, 703-H
W. L. Payne, 742-A
C. A. Polson, 707-H
M. J. Rea, 707-H
R. Salizzoni, 707-H
R. M. Satterfield, 719-4A
C. B. Stevens, 742-6G
T. A. Syfert, 707-2H
A. L. Towns, 704-S *
G. T. Wright, 703-H
Records Administration, 773-52A *
EPD Fileroom, 742-A

2

TABLE 7-21

EVAPORATOR POT SPECIFICATIONS
(242-16H Evaporator System)

DESCRIPTION	SPECIFICATION
Year Complete	1994
Vendor	Joseph Oat Corporation
Evaporator Pot	
Approximate Dimensions (diameter, height)	8' D, 16' 5-1/2" H
Capacity, Designed Liquid Level (working volume)	1800 GAL
Capacity, Overheads Flowrate (average, max)	10 GPM (AVE), 12 GPM (MAX) (limited by demister design)
Shell Thickness	3/8 INCH
Material of Construction	304L STAINLESS STEEL
Design Temperature	320 deg. F
Design Pressure	15 PSIG
Demister	
Dimensions (diameter, height)	36" D, 26" H
Material of Construction	304 STAINLESS STEEL
Capacity (max, flow)	6000 lb/hr (12 gpm)
Design Temperature	320 deg. F
Design Pressure	15 PSIG
Heater Tube Bundle	
Dimensions (diameter, length)	0.75" O.D., 7.5' L
Number of Tubes	233 BENT TUBES
Material of Construction	HASTELLOY G-30

OSR 3-4A-W (Rev 1-89)

3

WESTINGHOUSE SAVANNAH RIVER COMPANY

INTER-OFFICE MEMORANDUM

HLW-REG-950112

April 27, 1995

To: C. R. Hayes, 742-5A
EPD/Permitting Field Support Group

From: M. A. Hunter, 703-7C MAH
HLWE/Environmental Compliance

Specifications for the Replacement of the 242-16H Evaportor Pot (U)

Ref: Permit Application for an Industrial Wastewater Treatment Facility for the F and H-Area HLW Tank Farms, Permit # 17,424-IW

In order to support future needs in the High Level Waste Tank Farms, it is necessary to replace the evaporator pot from the 242-16H Evaporator System. This pot has not failed, however, it has reached the end of its design life. It is High Level Waste Operation's intent to begin replacement of the pot in September of this year. The specifications for the replacement pot differ from those listed for the spare evaporator pot listed in Section 7 of the permit application. The specifications for the replacement pot are list on the attached revised permit application page.

Per the description of Normal Operations in Section 4.2 of the application, a permit modification is not required for this replacement. However, HLW Environmental Compliance requests that the Environmental Protection Department make a courtesy notification to the South Carolina Department of Health and Environmental Control of the specifications for the new evaporator pot.

Attachments: 1

CC: G. T. Wright, 703-H
C. A. Polson, 707-H
W. D. Lanham, 707-H
T. M. Lex, 719-4A
R. M. Satterfield, 719-4A
T. M. Monahon, 703-H
D. T. Bignell, 719-4A
R. L. Salizzoni, 707-H
C. B. Stevens, 742-6G
M. A. Ceravolo, 707-H
T. A. Syfert, 707-2H
M. J. Rea, 707-H
A. L. Towns, 704-S

INTER-OFFICE MEMORANDUM
Savannah River Site

19-Apr-1995 03:24pm EST

To:	Troy Hoover	(HOOVER-TS-Y8803 AT A1 AT SRXSS2)
CC:	Bharat R. Damani	(DAMANI-BR-Y4387 @A1@SASRS2)
CC:	Raymond G. Perks	(PERKS-RG-Y4490 @A1@SLSRP1)
CC:	Joseph Carroll	(CARROLL-J-Z7084 AT A1 AT SRXSS2)
From:	Chuck Hayes	(HAYES-CR-Z9722)
Dept:	EPD	
Tel :	7258838	

RE: Late Wash Bypass Waste Water Const. Permit Closure

The following documentation is needed prior to placing the APP Bypass Project into service:

1) As-built versions of the following drawings: W751834, W764188, W764189, W764190, W764181 and D194026. These do **not** have to be PE Stamped.

2) Pressure/Leakage Test Results

✓3) A secondary containment assessment (PE-certified by both design and construction) for the "crossover" section of the project. ← COMPLETE

This has been discussed with and agreed to by Joe Carroll (Construction PE). Also, I have already conducted the final inspection of this project. Another field inspection by me is not necessary.

Please contact me if there are any other questions.

WESTINGHOUSE SAVANNAH RIVER COMPANY

INTER-OFFICE MEMORANDUM

HLW-HLE-95-0392

May 23, 1995

TO: C.R. Hayes, 742-5A

FROM: D.C. Bumgardner, 742-4G DCB

PROJECT S-4062 REPLACEMENT HIGH LEVEL WASTE EVAPORATOR
Transmittal of Waste Water Collection Permit Application (U)

Attached is the Replacement High Level Waste Evaporator Waste Water Collection Permit application (original+ 5 copies). This application has been approved by WSRC, and is ready for transmittal to SCDHEC.

Please address any comments or questions to Doug Bumgardner at extension 7-0500.

DCB:dcb
Attachment

cc: R.W. Alley, Westgate w/a
C.J. Boasso, 704-60H w/a
J. Carrol, 717-9N w/a
R.A. Delcastilho, 742-2G w/a
M.A. Hunter, 703-7C w/a
D.J. Martin, 742-4G w/a
W.P Mayson, 704-61H w/a
E. Saldivar, 703-H w/o
C.B. Stevens, 742-6G w/o
D.J. Sullivan, 704-60H w/o
A.W. Wiggins, 241-84H w/o
R.W. Wilson, 742-2G w/a
File Room S-4062 WM 171.1, 703H w/a

REGULATORY DOCUMENT PREPARATION SUMMARY AND APPROVAL FORM

Rev. 1

A. DOCUMENT REQUIREMENTS

Document Title and Number: Construction Permit Application Package; Replacement High Level; waste Evaporator Overheads Line

Regulatory Agency Due Date: N/A

B. DOCUMENT PREPARATION

Div. and Dept. Preparing Document: High Level Waste Management Division; High Level Waste Operations

SRS Procedures Used in Preparation: WSRC-IM-91-69 (Environmental Permitting "HOW" Manual)

(Procedures summarize document preparation and quality assurance.)

For Organizations other than EPD: (see instructions)

Preparer and Title: R. W. Wilson, Manager, Replacement ~~High~~ Level Waste Evaportator

Preparer's Signature: Date: 1/24/95

C. EPD REVIEW

Date Document Received: ~~8/17/94~~ 3/3/95 cal

Review Actions: See Attachment "A"

EPD Coordinator and Title: Charles R. Hayes, Jr., Engineer (Qualifications on file at EPD)

Coordinator's Signature: Charles R. Hayes, Jr. Date: 3/8/95

D. WSRC APPROVALS

Document Approvals, as required: **Document Classification:** U (Attach OSR 14-357, Document Approval Sheet)

EPD Section Manager (Lvl. 3)		Date Approved: 3/15/95
EPD Manager (Lvl. 2)	N/A	Date Approved:
Other Manager (Lvl. 2)		Date Approved: 3/22/95
General Counsel 's Office	, SR. COUNSEL.	Date Approved: 3/16/95
VP Approval & Division		Date Approved: 4/24/95
VP Approval & Division		Date Approved:

E. DOE-SR CONCURRENCE

Concurrence Required? Yes ☐ No ☒

DOE Signing Official's Name: N/A

Title of DOE Signing Official: N/A

Date Transmitted to DOE : N/A

DOE Person Receiving Document: N/A

F. TRANSMITTAL & DOCUMENT CONTROL

Date received from DOE-SR N/A

Date executed copies to DOE-SR

Date sent to Regulator

Date sent to Central Files

BECHTEL SAVANNAH RIVER INC.

INTEROFFICE MEMORANDUM

March 8, 1995

TO: W. D. Dunaway, 742-5A

FROM: T. G. Wineteer, 966W-B10-104

Subject: PROFESSIONAL ENGINEER (PE) REVIEW OF CONSTRUCTION PERMIT APPLICATION PACKAGE; REPLACEMENT HIGH LEVEL WASTE EVAPORATOR OVERHEAD TRANSFER SYSTEM (U)

Ref: Letter W. D. Dunaway to W. S. Gray, ESH-FSS-95-0090 dated March 3, 1995

In general, the draft of the Wastewater Construction Permit Application Package: Replacement High Level Waste Evaporator Overhead Transfer System is complete and accurate except for the following comment:

> Page 3 of the application should have the design PE stamp as required by section 5.2 of the "HOW" manual.

Assuming this comment is resolved, the permit package is complete and accurate enough for submittal to SCDHEC.

If you have any questions, please contact me at 952-5388.

Theodore G. Wineteer
S. C. Registration No. 14692

CC: W. S. Gray, 966W-B10-116
M. Hawkins, 742-A
C. R. Hayes, 742-5A
R. Rider, 966W-B10-046

WSRC-EPD

PERMITTING FIELD SUPPORT GROUP

REVIEW COMMENTS

C R Hayes

(REV. 1, 3/23/92)

DISTRIBUTION:
C. R. Hayes, 742-5A
D. C. Bumgardner, 707-2H
M. A. Hunter, 703-7C
D. J. Martin, 707-2H
C. B. Stevens, 742-6G

REVIEWED BY	FIELD CONTACT	DATE	PAGE 1 OF 1
C. R. Hayes, 742-5A, X5-8838	M. A. Hunter	8/18/94	

FIELD CONTACT DEPT	PROJECT NAME	PROJECT NO.	FILE NO.
HLW Env. Comp.	RHLWE Overhead Line to F/H ETF Process Sewer	S-4062	W-0

SUBJECT REVIEWED

- [X] PERMIT APPLICATION PACKAGE
- [ ] CALCULATIONS
- [ ] FDC
- [ ] PROPOSAL/ REQUEST
- [ ] DRAWINGS

REVIEW COMMENTS

I. **Application Page** -

- (XIII) A Construction Professional Engineer's name [registration number, signature and stamp should appear]

II. **Engineering Report** -

- Need to add a discussion about the flow increase to ETF (i.e., 1H vs. RHLWE) ✓

IV. **Utilities Acceptance Permit** -

- The custodian's signature (w/ date) should appear ✗

VI. **Specifications** -

- Specs must also be included for underground piping installation and testing for all piping ✓

VII. **Drawings** -

- Each drawing must be stamped and signed by the design PE. ✗

COMMENT RESOLUTIONS
ETF WASTEWATER PERMIT MODIFICATION

TABLE OF CONTENTS

1.) INCORPORATED
2.) SPECIFICATIONS SECTION ADDED

ENGINEERING REPORT
1 A) REFERENCE TO SETPOINT DELETED
B) REVISED AS STATED
C) REVISED AS STATED
2.) REVISED AS STATED
3.) REVISED AS STATED
4.) NOT INCORPORATED. OLD EVAPORATOR MAXIMUM OVERHEADS RATE NOT APPLICABLE TO PERMIT APPLICATION FOR RHLWE.
5.) CONSTRUCTION PE WILL BE JOE CARROLL (557-4762) PER MATT HUNTER.
6.) INCORPORATED
7.) REVISED AS STATED
8.) REVISED TO READ "THIS ENGINEERING REPORT" RATHER THAN "THIS PERMIT APPLICATION".
9.) MAXIMUM OVERHEADS RATE WILL BE 21 GPM FOR 24 HOURS 365 DAYS A YEAR
10.) SRS PIPING STANDARD WILL BE INCLUDED

SRS/AREA MAPS
1.) REVISED AS STATED

SRS UTILITIES ACCEPTANCE PERMIT
1.) REVISED AS STATED

DESIGN CALCULATIONS
1.) CALCULATIONS WILL RELATE TO LINE SIZING AND PUMP SIZING
2.) REVISED ACCORDINGLY
3.) NOT INCORPORATED. OLD EVAPORATOR MAXIMUM OVERHEADS RATE NOT APPLICABLE TO PERMIT APPLICATION FOR RHLWE.
4.) REVISED AS STATED
5.) REVISED AS STATED

SPECIFICATIONS
1.) SPECIFICATION FOR PIPING AND VALVES ADDED

DESIGN DRAWINGS
1.) PIPING DRAWINGS WILL BE INCLUDED
2.) DESIGN DRAWINGS WILL BE STAMPED FOR FINAL ISSUE

WSRC-EPD

PERMITTING FIELD SUPPORT GROUP

REVIEW COMMENTS

DISTRIBUTION:
C. R. Hayes, 742-5A
D. C. Bumgardner, 707-2H
D. J. Martin, 707-2H
C. B. Stevens, 742-6G

C.R. Hayes

(REV. 1, 3/23/92)

REVIEWED BY	FIELD CONTACT	DATE	PAGE 1 OF 1
C. R. Hayes, 742-5A, X5-8838	M. A. Hunter	7/18/94	

FIELD CONTACT DEPT	PROJECT NAME	PROJECT NO.	FILE NO.
HLW Env. Comp.	RHLWE Overhead Line to F/H ETF Process Sewer	S-4062	W-0

SUBJECT REVIEWED

- [X] PERMIT APPLICATION PACKAGE
- [ ] CALCULATIONS
- [ ] FDC
- [ ] PROPOSAL/ REQUEST
- [ ] DRAWINGS

REVIEW COMMENTS

Table of Contents Page - Please notice the editorial comments in red in this section.✓
- A specification section containing material and construction standards (15060-01-R??) must be included ✓

I. **Application Page** - A new application form has been provided. Please verify all included information and address the following:
- Verify that the 1200 total feet includes outside and inside (service) piping
- (XIII) A Construction Professional Engineer's name and registration number should appear
- After corrections (if any) are made, the design and construction PE stamps and signatures should appear in Sections XII and XIII

II. **Engineering Report** -
- Please notice editorial comments in red on pages 5 and 6
- Need to discuss what happens when rad levels exceed 400 d/m/ml (also **define d/m/ml**) ✓
- At end of first paragraph, Add: The RHLWE (including both receiver tanks) is permitted under Construction Permit #17424-IW. ✓
- At end of third paragraph, Add: sloped for proper drainage **to a leak detection box or other containment.** ✓
- Need to add a discussion about the flow increase to ETF (i.e., 1H vs. RHLWE) (Page 17?)
- Need Permit Custodian's signature
- Need Construction PE's name and phone # ✓
- After corrections are made, the design PE stamp and signature should appear on the cover page

IV. **Utilities Acceptance Permit** - Replace Power Operations Department with **Waste Management Operations** Department ✓
- After corrections are made, the custodian's signature should appear

V. **Calculations** - After corrections are made, the design PE's stamp and signature must appear on page 13
- The purpose of the calculations **should not be** to ensure a 3.5 fps velocity. This requirement is for sanitary wastewater systems only. Instead the calculations should size lines and pumps. They should be re-done entirely. ✓

VI. **Specifications** - Standard 15060-01-R, at a minimum should be included. Specs must also be included for underground piping installation and testing for all piping.
- Cover Page, the following statement must appear on the cover page (that is stamped): The following specifications have been reviewed and approved by a registered professional engineer. ✓

VII. **Drawings** - A plan view of the interior (to service building) piping including tie-in to the tanks must be included. ✓
- Each drawing must be stamped and signed by the design PE

GAVE THESE COMMENTS TO MATT BY PHONE ON 8/8/94.

REPLACEMENT HIGH LEVEL WASTE EVAPORATOR OVERHEAD LINE TIE-IN TO ETF PROJECT NO: 9S4062

SCDHEC APPLICATION FOR PERMIT TO CONSTRUCT AN INDUSTRIAL WASTEWATER COLLECTION SYSTEM

TABLE OF CONTENTS

SECTION	DESCRIPTION	PAGE
1	PERMIT APPLICATION FORM	2-3
2	ENGINEERING REPORT/PROJECT DESCRIPTION	4
3	SRS/AREA MAPS ~~AND SDC&M MAPS~~	8-10
4	SRS UTILITIES ACCEPTANCE PERMIT	12
5	CALCULATIONS	13
6	DESIGN DRAWINGS	18

SPECIFICATIONS

2. ENGINEERING REPORT / PROJECT DESCRIPTION

(Please type)

PROJECT NO.: 9S4062

PROJECT NAME: Replacement High Level Waste Evaporator (RHLWE)

SRS AREA: H NUMBER OF PERSONS SERVED: N/A

PROJECT DESCRIPTION: (Include building number(s), length(s), type(s), and size(s) of all piping, and the number and type of manholes and lift stations.)

Under the RHLWE project, a new replacement evaporator (242-25H) will be added to evaporate low and high heat waste. The evaporated liquids (overheads) are condensed and collected in the overheads receiver tanks. To ensure that radioactive effluent is not discharged to the ETF, the Mercury Removal Tank (PWS-TK-311) upstream of the overheads tanks alarms at radioactivity levels in excess of 1500 dpm/ml. A manual sample is also pulled from the overhead tanks and directed to a pulse analyzer which measures for radioactivity levels. If the levels exceed 400 d/m/ml, then the contents of the tank cannot be emptied to the ETF line. THEN WHAT ADD: THE RHLWE (INCLUDING THE RECEIVER TANKS) IS PERMITTED UNDER SCDHEC PERMIT TO CONSTRUCT # 17424-IW)

The scope of this permit application involves the tie-in of RHLWE project overheads line (henceforth designated as ~~either~~ PWS577) from overheads receiver tanks #1 and #2 (PWS-TK-325 and PWS-TK-031, respectively) to an existing Effluent Treatment Facility wastewater line at Manhole #2 as indicated on drawing W833920. Only one tank will be operating at any given time; while tank #1 is pumping, tank #2 will be filling or vice-versa. (Note: W833921 detailing the line exiting overhead receiver tank #2 is not provided with this permit application since the configurations of tank #1 and tank #2 are identical.) Two pumps (PWS-P-319, PWS-P-318) are included in the overheads line, of which only one is operating at any given time. Vendor information for the pumps is presented in the calculations section of this permit application. OK NEED DATA

The overheads line consists of approximately 1200 linear feet of piping. Inside the Evaporator Service Building (242-11H) and the Evaporator Building (242-25H), the piping is 2-inch schedule 10S 304L stainless steel per piping code P53 (SRS Engineering Standard 15060-01-R) and outside the building, the piping is 2-inch schedule 40 carbon steel (P34). Additionally, outside the service building, the 2-inch PWS577 is jacketed. The jacketing for the core piping is fabricated from schedule 40 A53 carbon steel per piping code P51. The core piping remains 2-inch outside the service building; however, the jacketing varies between 4, 6, and 8 inches. The overheads line is heat traced outside of the service building for freeze protection and sloped for proper drainage to an area of containment.

SHOULD COMPARE 25H TO 11H (FLOWS)

In order to prevent the release of hazardous and/or radioactive substances to the environment, the Federal Facility Agreement (FFA) requires that secondary containment be provided for all H-Area tank system(s) or component(s); thus the requirement for the overheads line to be jacketed outside of the service building. Additionally, the FFA requires that the secondary containment system(s) be capable of detecting the failure of either the primary or secondary containment structure or the presence of hazardous constituents or accumulated liquid in the secondary containment system(s) within 24 hours. In accordance with this stipulation of the FFA, leak detection is provided by two leak detection boxes at low points in the line with conductivity probes wired to alarm in the control room when a leakage of 7/8-inch is detected within leak detection box.

NEED TO INCLUDE A GPM or GPD FLOW!

TIE-IN TO EXISTING SYSTEM WILL BE ACCOMPLISHED BY: (Include size of line being tied into and coordinates of tie-in point.)

Tie-in to the existing Effluent Treatment Facility (ETF) industrial wastewater line will be at existing Manhole #2 located at SRS coordinates N72321.21, E60516.38. The existing ETF collection line is an 18-inch polyethylene line with a 24-inch polyethylene jacket, in accordance with the Federal Facilities Agreement for secondary containment of potentially contaminated lines.

gravity

IMPACT ON EFFLUENT TREATMENT FACILITY:

CURRENT TREATMENT PLANT CAPACITY:	158 Million Gallons/Year
EXISTING TREATMENT PLANT LOADING:	20 Million Gallons/Year
MAX LOAD ADDED BY THIS PROJECT:	11 Million Gallons/Year
TOTAL PLANT LOAD AFTER ADDITION:	31 Million Gallons/Year

PERMIT CUSTODIAN SIGNATURE: _____ Phone: 557-0525

R. W. Wilson

(Signature verifies that I have read and understand the responsibilities of the permit custodian as specified in "HOW" Manual, Section 1.4)

DESIGN PE: Herbert Worchel Phone: 667-5745

CONSTRUCTION PE: _____ Phone: _____

The design, materials, fabrication, testing, installation, modification, repair certification and inspection of the piping, including instrumentation piping and tubing will be in accordance with SRS Engineering Standard 15060-01-R, Process and Service Piping.

NEED TO INCLUDE 15060-01-R IN THIS PACKAGE.

5. DESIGN CALCULATIONS

A. GRAVITY FLOW CALCULATIONS

ONLY FOR SANITARY, WW

Purpose: The purpose of this calculation is to prove that a velocity of 3.5 feet per second will be maintained at full flow. The minimum of 3.5 feet per second flow velocity is required in accordance with DOE Order 6430.1A Section 0270-1.3, Sanitary Sewer System Design Considerations and a minimum of 2.0 feet per second is required per Chapter 30 of the Ten States Standards; therefore, proving that the velocity exceeds 3.5 feet per second is conservative. The full flow condition is established by using the rated flow of the overhead condensate pumps. Each pump is rated for 50 GPM; however, only one pump will be used with the second pump as a spare. Refer to section B for vendor pump data.

Rated Capacity of Pumps (Full Flow Condition): 50 GPM

Converting this flow rate to cubic feet per second:

$$q = 50\ \text{Gal/min} \times 1\text{min}/60\text{sec} \times 0.1337\text{ft}^3/1\text{gal} = 0.1114\ \text{ft}^3/\text{sec}$$

Using Crane Technical Paper No.410, Flow of Fluids Through Valves, Fittings, and Pipe as a reference, the following formula was selected to determine the fluid velocity through the pipe:

$$\mathbf{v = 183.3\ q / d^2}$$

where v = velocity of fluid (ft/sec)
q = full flow condition (ft^3/sec)
d = inside diameter of pipe (in)

According to the design drawing (W833920), the 2-inch piping for the overheads line (designated as PWS577 or WO577) is fabricated from schedule 10S 304L stainless steel (piping code P53 per SRS Engineering Standard 15060-01-R) within the service building. Outside the service building the overheads piping (PWS577) is fabricated from schedule 40 carbon steel (piping code P34 per SRS Engineering Standard 15060-01-R). The inside diameters of the two piping types are:

Schedule 10S 304L Stainless Steel (P53)	d = 2.157 in.
Schedule 40 Carbon Steel (P34)	d = 2.067 in.

Using the above equation, the velocities are as follows:

Schedule 10S 304L Stainless Steel (P53)

$v = (183.3)(0.1114) / (2.157)^2$
v = 4.39 ft/sec

Schedule 40 Carbon Steel (P34)

$v = (183.3)(0.1114) / (2.067)^2$
v = 4.78 ft/sec

Conclusion: Both of these velocities at the full flow conditions are above the required velocity of 3.5 ft/sec for a forced main system (pumped), thus the velocities for the overheads lines are adequate.

INTER-OFFICE MEMORANDUM
Savannah River Site

5-Jul-1994 11:15am EDT

To: Douglas C. Bumgardner
(BUMGARDNER-DC-L5295 AT A1 AT SASRS2)

CC: Chuck Hayes (HAYES-CR-Z9722 @A1@SLSRP1)
CC: CARY B. STEVENS
(STEVENS-CB-O5981 AT A1 AT SASRS2)
CC: DAVID J. MARTIN (MARTIN-DJ-O5585 AT A1 AT SASRS2)

From: Matthew A. Hunter (HUNTER-MA-L2335 AT A1 AT SASRS2)
Dept: HLW Env Compl
Tel : 5576416

OH Line to ETF Permit App (U)

Doug,

I've finished my review of the permit application and thought it look pretty good. But, then again I'm not the expert. Chuck will be able to give you more insight into the acceptability of the package to the regulators. I only had a couple of comments that were editorial. So here they are:

Page 5

Strike "(Please type)" underneath Section 2 title.

- 1st paragraph, 4th sentence: delete "for" between measure and radioactivity.

- 1st paragraph, 5th sentence: Add verbiage to describe the fate of the overheads that are above 400d/m/ml. Something like"... ETF line and will be sent back to the evaporator feed tank."

- 4th paragraph: The title of the FFA is Federal Facility Agreement.

Page 6

- 1st paragraph, 2nd sentence: ETF is not covered under the FFA, therefore strike everything after "24-inch polyethylene jacket ..."

One other comment about our conversation yesterday. It sounds like EBASCO has a handle on the FFA and the requirements of it. It does not seem like it would take much effort to include a PE certified statement that this line meets the requirements of the FFA. This certainly would tie things up in a neat little package and then Joe Carroll could provide the construction certification for the entire facility instead of possibly breaking it in two.

The design certification statement that we are planning on using reads something like this:

"This Permit Application was prepared under my supervision and direction. I certify that the wastewater collection system has been designed in keeping with applicable engineering standards and to the requirements of Appendix B of the FFA. These standards have been generally accepted as adequate to demonstrate leak tightness."

RAYTHEON ENGINEERS & CONSTRUCTORS
EBASCO DIVISION

WESTGATE CENTER OFFICE
2528 CENTER WEST PARKWAY
AUGUSTA, GA 30909

FACSIMILE TRANSMITTAL FORM

DATE: 7-7-94

TO: [illegible] 7-1783; 2900

FACSIMILE NUMBER: (803) [illegible]

FROM: ROGER ALLEY

[illegible]MATION/VERIFICATION NUMBER: [illegible]

NUMBER OF PAGES: 3 (Including This Sheet)

SPECIAL INSTRUCTIONS/COMMENTS:

LETTER #PESC-T[illegible]-94-2[illegible]
dated 7-7-94
"Transmittal of SCDHEC Perm
Application..."

EBASCO FAX NUMBERS

(* indicates where fax originated)

WESTGATE OFFICE		LAMAR BUILDING	
[illegible]	(706) 66[illegible]-5967	[illegible] FLOOR	(706) [illegible]
[illegible]	(706) 66[illegible]-5725	[illegible] FLOOR	(706) [illegible]
	(706) 66[illegible]-2360	[illegible]TH FLOOR	(706) [illegible]-3160
[illegible]	(706) 667-5973		
[illegible]	(706) 667-2399		

Westgate Center Office Park
2525 Center West Parkway
Augusta GA 30909-2116

706 667 5700
FAX 706 667 5720

Raytheon
Engineers & Constructors

[illegible] 94
PESC-T019-94-231
File Index [illegible]
Response Required By: 7/20/94

Mr. J. M. Lovekamp
Bechtel Savannah River Company
802 E. Martintown Road
North Augusta, SC 29841

SUBJECT: **WESTINGHOUSE SAVANNAH RIVER COMPANY**
PROJECT ENGINEERING SERVICES CONTRACT
SUBCONTRACTS AA07225P/AA00006P
TASK ORDER NO. 019 - PROJECT NO. 954062
REPLACEMENT HIGH LEVEL WASTE EVAPORATOR DOCUMENT
TRANSMITTAL OF SCDHEC PERMIT APPLICATION DRAFT FOR RHLWE OVERHEADS LINE TIE-IN TO THE EFFLUENT TREATMENT FACILITY (U)

References:
1. Letter, PESC-T019-94-232, dated 07/06/94
2. Letter, EPD-VHLW-93-0224, dated 08/19/93
3. WSRC Inter-Office Memorandum, HLW-HLE-93-240, dated 08/13/93

Dear Mr. Lovekamp:

Attached for WSRC review by DE/HLWE is the draft SCDHEC Permit Application for tie-in of the RHLWE Overheads Line to Manhole Number 2 of the carrier (feed) line to the Effluent Treatment Facility (ETF, Building 607-24H). Applicable reference design documents and calculations are provided within the permit application, and will be PE-stamped upon issuance of the application following WSRC review.

The DCP for tie-in of the Overheads Line to the ETF feed line was transmitted for WSRC Design Authority approval in Reference 1.

Please provide DE/HLWE concurrence to transmit the [illegible] permit application [illegible] by [illegible] 20, 1994. Please note the following specific [illegible] your review:

[illegible] on page 2 indicates that [illegible] DHEC [illegible] interpretation of paragraph 5.7 (Sp[illegible] WSRC IM-[illegible] SRS [illegible] "HOW" Manual, Section [illegible] permit application is not required [illegible] application

[illegible] M. Lovekamp
[illegible] 1019-94-231
[illegible]

[illegible] Required By: 07/20/94

Section 2 on Page 5 states that the contents of the Overhead Receiver Tank [illegible] be emptied [illegible] if manual sample radioactivity levels (as indicated by the Pulse Height [illegible] exceed 400 dpm/ml. This effluent release limit was recently (and verbally) specified by HLWE and requires documented clarification to ensure proper interpretation by the user (i.e., to confirm the value, and to clarify whether it is to be interpreted as total activity or [illegible] nuclide value). Note that in Reference 3 (transmitted as design input via Reference 2), HLWE specified a high alarm setpoint value of 1500 dpm/ml for Mercury Removal Tank [illegible] and stated an anticipated nominal operating value of [illegible] dpm/ml. This design input [illegible] 400 dpm and effluent activity release limit for the Overhead Tanks, as quoted in [illegible] application, is too low. WSRC (HLWE) is requested to [illegible] the design [illegible] for this release limit and to provide documented design [illegible] application.

[illegible] let me know if you have any questions

Very truly yours,

Roger W. Alley
Task Manager

RWA[illegible]
Attachments

[illegible] E. Bartus, 704-60H, w/o att.
[illegible] J. Bousso, 704-60H, w/o att.
K. R. Brown, 704-60H, w/o att.
P. A. Forbes, 704-61H, w/o att.
M. S. Kuntamukkala, 730-B, 1182, w/o att.
J. M. Lovekamp, 704-60H, w/att.
D. J. Martin, 707-2H, w/att.
D. Bumgardner, 707-2H, w/o att.
M. Hunter, 703-7C, w/att.
D. T. O'Rear, 742-2G, w/o att.
K. Rosenberger, 735-11A, w/o att.
P. D. Smith (2), Westgate, w/att.
[illegible] Westgate, w/o att.
E. A. Reardon, Jr., Westgate, w/o att.

OSR 3-4A-W (Rev1-89)

WESTINGHOUSE SAVANNAH RIVER COMPANY

INTER-OFFICE MEMORANDUM

ESH-FSS-95-0090

March 3, 1995

TO: W. S. GRAY, 966-W

FROM: W. D. DUNAWAY, 742-5A
(X5-5754)

PROFESSIONAL ENGINEER (PE) REVIEW OF CONSTRUCTION PERMIT APPLICATION PACKAGE; REPLACEMENT HIGH LEVEL WASTE EVAPORATOR OVERHEADS TRANSFER SYSTEM (U)

Ref.: Work Authorization Number 211928

Per the referenced authorization, please initiate your PE review for the attached Wastewater Construction Permit Application Package: Replacement High Level Waste Evaporator Overheads Transfer System.

As a reminder, these reviews should include a cursory review of the process design. However, the primary purpose is to provide an independent check of the completeness and accuracy of the permit package prior to submittal of the package to SCDHEC. A letter signed by the PE should be transmitted to myself indicating the package is, to the best of the PE's knowledge, complete and accurate except for any comments or deficiencies noted. Please provide your comments within five (5) working days after receipt of the package.

Please contact myself (X5-5754) or Chuck Hayes (X5-8838) if you have any questions.

CRH:pr
Attachment

CC: w/o attachment
M. Hawkins, 742-A
C. R. Hayes, 742-5A
EPD Fileroom, 742-A

Folder #5

TEST RECORDS

FILTRATE PIPING

- LEAK TESTS
- VACUUM BOX TESTS
- BUBBLE LEAK TESTS

File ID CMP 03-6.10-3
Page 1 Of 1

Leak Test Data Sheet

WP Page [illegible] of 24

1. CMP03-6.10, Rev. 2	2. Work Package No. 1780-LWM-Z013-P-001
3. Design Class PS	4. Prepared by STEVE GREEN

5. Scope of Work/Item to be Tested: PERFORM HYDROSTATIC TEST ON CORE PIPES.
REFER TO ISO# P-PI-S-0088 R/0

6. Type of Test/Pressure: Hydro 190 PSI Pneumatic ____ Other ____

7. Test Medium: Water ✓ Other ____

8. Test Pressure Tolerance: +10% -0% Actual Test Pressure: 200 PSIG Test Temperature: 51°F

9. Test Duration: 10 Min. ✓ 30 Min. ____ Other ____

10. M&TE Equipment No: CDS 2453 Calibration Due Date 3/17/95

11. Prehydro Walkdown Complete/Accepted and Ready for Test: [signature]

12.

Remarks/Specific Records	Requirements/References	Criteria/Supplementary

DIGITAL THERMOMETER CDS# 2629 DUE DATE 6-19-95
1/2" LINES (FT-73, FW 27,28) (FT-75, FW 21,22) (FT-76, FW 19,20) (FT-74 FW 30-31)

13. Acceptable No Leakage [signature] Acceptable Allowable Leakage ____

13a. Verify restoration of test boundary and lay up requirements are complete.
CDE (signature) [signature] Date 2-10-95

14. Examinations completed for all required attributes
CDE (signature) [signature] Date 2-10-95

15. Inspections completed for all required attributes
CDE (signature) [signature] Date 2/10/95

WP# Z013-P0001 PG 2 of 2.4

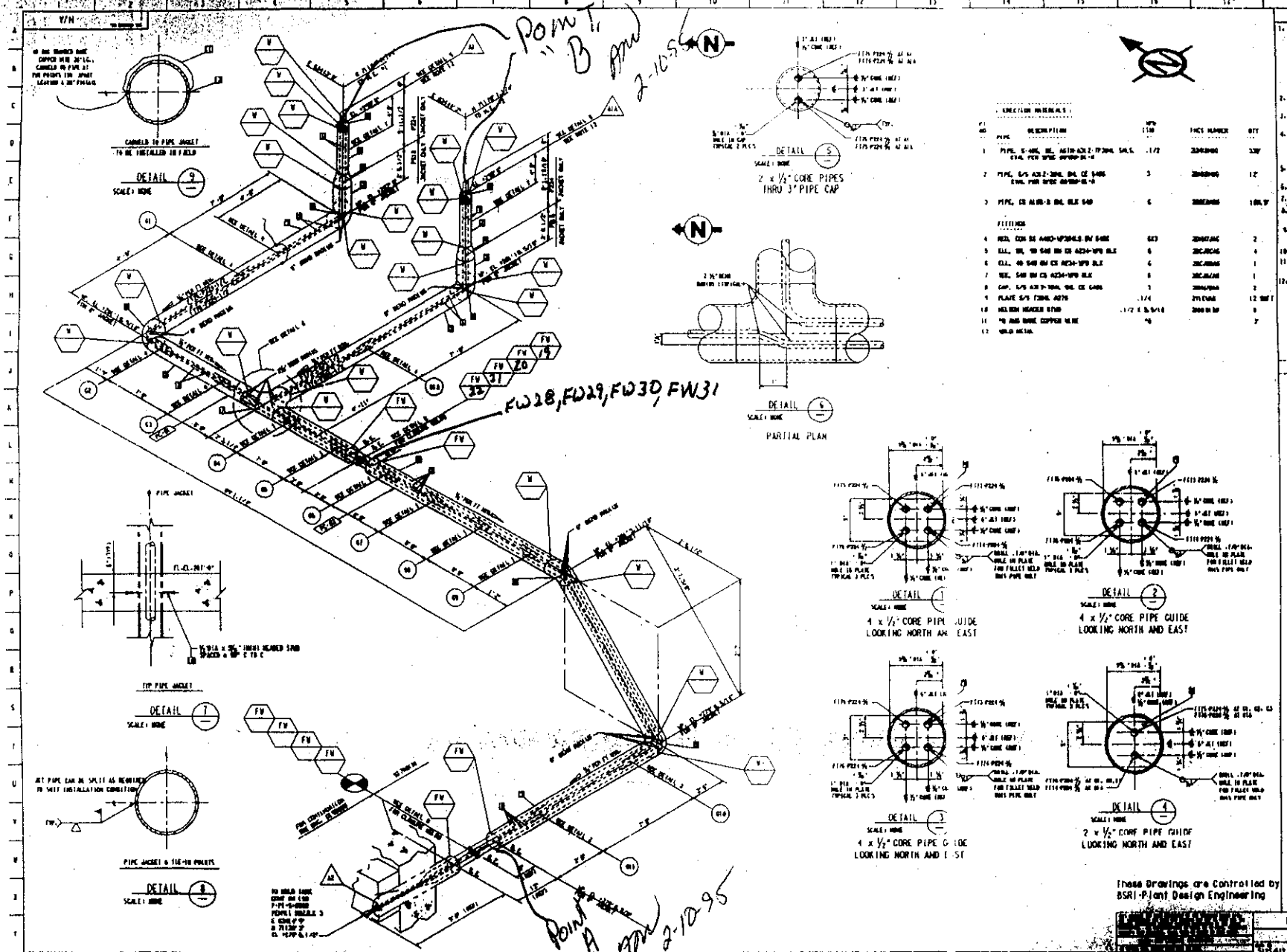

Leak Test Data Sheet

WP Page 1 of ____

1. CMP03-6.10, Rev. 2	2. Work Package No. 51780-LWM-2013-P-001
3. Design Class P5	4. Prepared by DONNA POSTMA

5. Scope of Work/Item to be Tested: PERFORM HYDRO TEST ON FILTRATE JACKET PIPE FIELD WELDS. (REFERENCE 150#'s P-PI-S-0088). TEST PER DESIGN CRITERIA. FW'S - 67, 68, 69 + 70

6. Type of Test/Pressure: Hydro ✓ 10 PSIG Pneumatic ____ Other ____

7. Test Medium: Water ✓ Other ____

8. Test Pressure Tolerance: 10 - ~~10+~~ 11 PSIG Actual Test Pressure: 10.6 Test Temperature: 51°F

9. Test Duration: 10 Min. ✓ 30 Min. ____ Other ____

10. M&TE Equipment No: CDS 4111 Calibration Due Date 4-3-95
DIGITAL THERMO CDS 2629 CAL. DUE DATE 6-19-95

11. Prehydro Walkdown Complete/Accepted and Ready for Test: E B Edmunds

12.

Remarks/Specific Records	Requirements/References	Criteria/Supplementary

13. Acceptable No Leakage E B Edmunds Acceptable Allowable Leakage ____

13a. Verify restoration of test boundary and lay up requirements are complete.
CDE (signature) E B Edmunds Date 2-15-95

14. Examinations completed for all required attributes
CDE (signature) E B Edmunds Date 2-15-95

15. Inspections completed for all required attributes
CDE (signature) E B Edmunds Steve A Allen Date 2-15-95

W/P A 1/8C-CW-M-2015-1

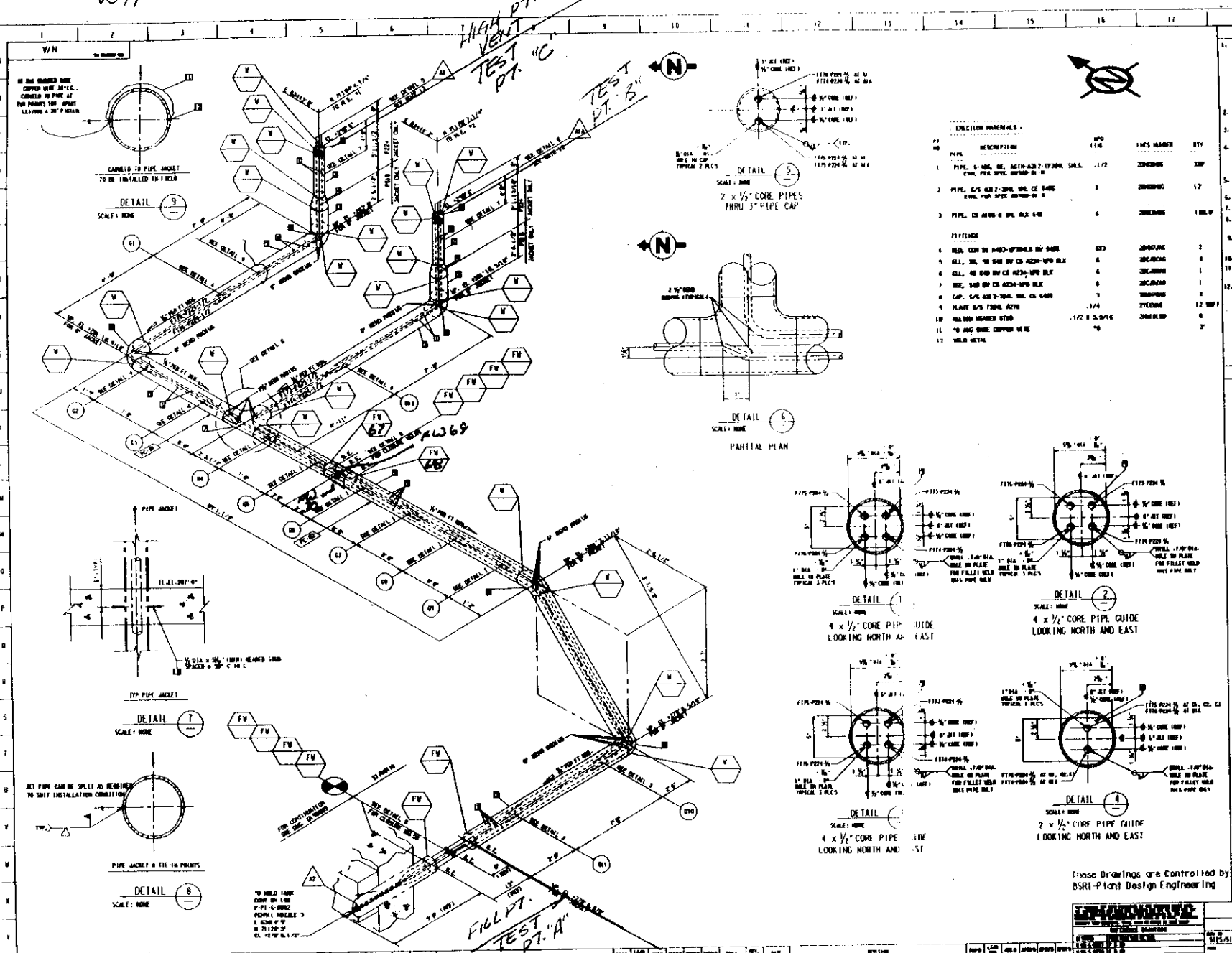

NOTES

1. PERFORM A HELIUM LEAK TEST ON CORE PIPE PER P224 AND PERM NONDESTRUCTIVE EXAMINATION STANDARD NLT 1 R/O. VACUUM HELIUM LEAK TEST IS IN ACCORDANCE WITH PERT 100 STANDARD NLT-1 R/O. ACCEPTANCE CRITERIA IS ZERO LEAK. A LEAK THAT CAN BE DETECTED BY USING EQUIPMENT SPECIFIED IN THE PROCEDURE. THE GAS BUBBLE TEST PER P224 AND AS SPECIFIED IN ARTICLE 10 SECTION V OF THE ASME CODE AT 20 - 1/4 PSIG IS ACCEPTABLE IN LIEU OF HELIUM LEAK TEST. GAS BUBBLE TEST PER PERT 100 NLT-1.
2. ALL PIPING TO BE PER WSRC DWG# 15000-01-0. P CORE P224 CORE1 AND P518 CAT1.
3. FOR HYDROSTATIC TEST PRESSURE SEE PROJECT AND SERVICE MODE # PSI S-00001.
4. UNDERGROUND JACKET PIPE SHALL BE PROVIDED WITH EXTERNAL PROTECTION PER THE COLUMBIA/STAINLESS STEEL JACKET IS TO BE COATED PER 00005 10 R SOUTH SITE. CARBON STEEL JACKET IS TO BE COATED PER SPECIFICATION 00-0 SOUTH SITE. SEE # 04P-S-00133.
5. FUNCTIONAL CLASSIFICATION FOR ALL PIPE AND COMPONENTS WILL BE PS-
6. DELETED.
7. DELETED.
8. CONSTRUCTION MAY USE ½" DIA. X 4½" (MIN) A307 BOLTS OR LIEU OF HEADED STUDS AT THEIR DISCRETION.
9. GUIDE AND SUPPORT MATERIAL IS NOT GUARANTEED TO BE CORROSION RESISTANT.
10. DIMENSIONS LESS THAN 2'-0" ARE GIVEN IN INCHES.
11. FOR CORE PIPE STRESS ANALYSIS, SEE CALCULATION 00-0-S-00025, REV-A.
12. IF REQUIRED AT WORK PRIOR TO JACKET CONNECTION HEAD GUARD, DRILL AND TAP HOLE IN JACKET FOR A ½" HEAT DRILLING PROBABILITY. AFTER COMPLETION OF LEAK TESTING, PLACE A PLUG (PIPE) AND SEAL WELD IN PLACE.

LEGEND

(C.) - GUIDE (DETAIL 1, 2, 3 OR 4)

(A.) - ANCHOR (DETAIL 5)

SHOP ORDER # L2009

P PI S 0088 0

These Drawings are Controlled by: BSRI-Plant Design Engineering

UNITED STATES DEPARTMENT OF ENERGY
SAVANNAH RIVER SITE

SAVANNAH RIVER SITE 2005 AREA
DEFENSE WASTE PROCESSING FACILITY
LATE WASH FACILITY
SAMPLE RETURN FROM LABORATORY TO HOLD TANK
UNDERGROUND ISOMETRIC
FT73-P224 ½A, FT74-P224 ½B, FT75-P224 ½C,
FT76-P224 ½D CORE PIPES IN P518-6 JACKET (U)

N/A | 1 OF 1 | 0

File ID CMP 03-6.10-3
Page 1 Of 1

Leak Test Data Sheet

WP Page ____ of ____

1. CMP 03-6.10, Rev. 2	2. Work Package No. 1780-LWM-Z013-P-001
3. Design Class PS	4. Prepared by CHUCK HOLOD

5. Scope of Work/Item to be Tested: PERFORM HYDROSTATIC TEST ON CORE PIPE REF. ISO. P-PI-S-0088 REV. 0

6. Type of Test/Pressure: Hydro 190 PSIG Pneumatic ____ Other ____

7. Test Medium: Water ✓ Other ____

8. Test Pressure Tolerance: +10% -0 Actual Test Pressure: 200# Test Temperature: 50°F

9. Test Duration: 10 Min. ✓ 30 Min. ____ Other ____

10. M&TE Equipment No: [illegible] DIG THERMO. CDS 2629 Calibration Due Date [illegible] CAL DUE DATE 6/19/95

11. Prehydro Walkdown Complete/Accepted and Ready for Test: E B Edmunds

12.

Remarks/Specific Records	Requirements/References	Criteria/Supplementary
DIGITAL THERMOMETER CDS 2980 DUE 3/23/95		
1/2" LINES: FT-73 (FW 25)		
FT-74 (FW 26)		
FT-75 (FW 24)		
FT-76 (FW 23)		

13. Acceptable No Leakage E B Edmunds Acceptable Allowable Leakage ____

13a. Verify restoration of test boundary and lay up requirements are complete.

CDE (signature) E B Edmunds Date 2-17-95

14. Examinations completed for all required attributes

CDE (signature) E B Edmunds Date 2-17-95

15. Inspections completed for all required attributes

CDE (signature) E B Edmunds Date 2-17-95

W/P # 1780-LWM-Z013-P-001

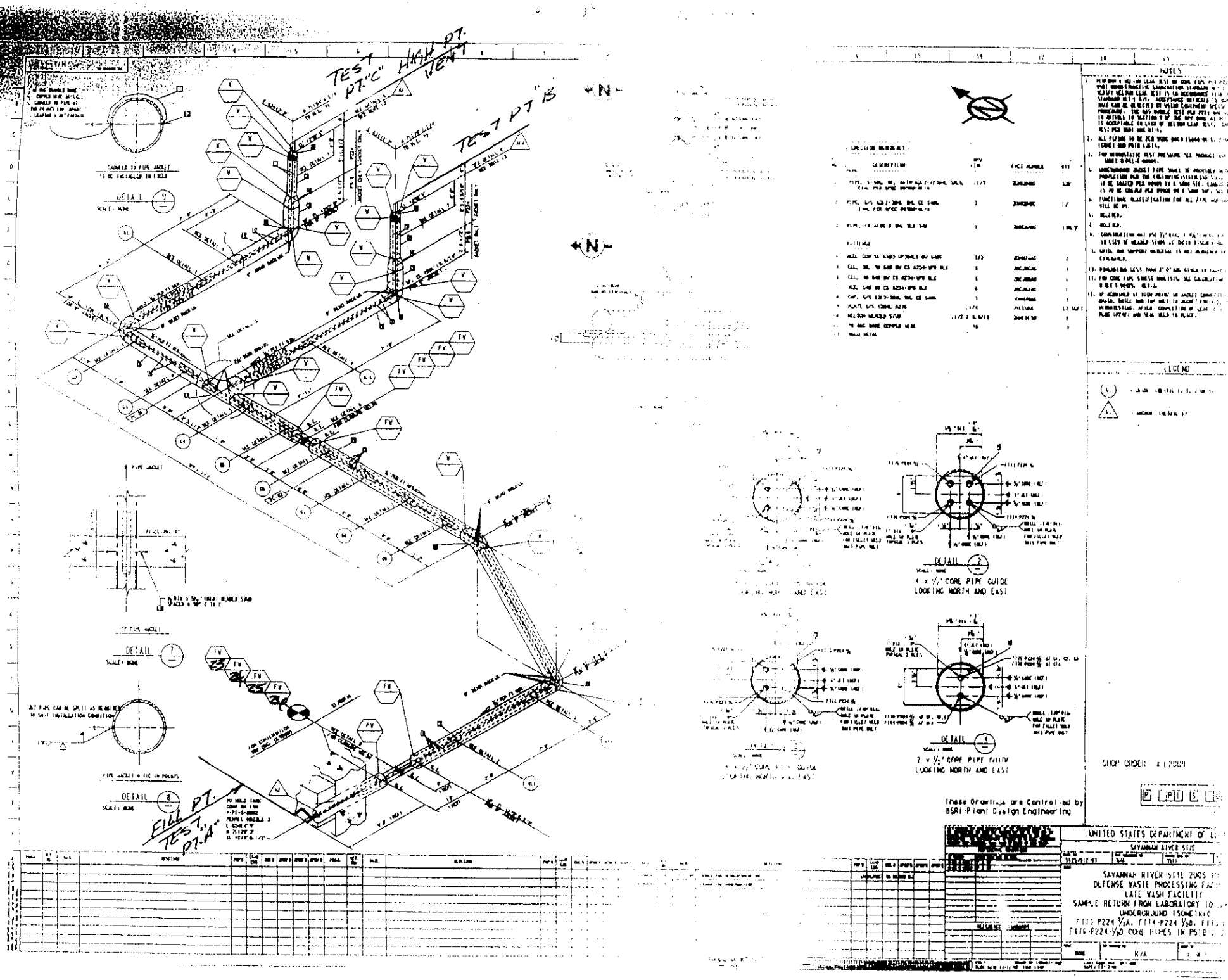

TEST PT. "C" HIGH PT. VENT
TEST PT. "B"
FILL PT. TEST PT. "A"
DETAIL 9
DETAIL 7
DETAIL 8
DETAIL 2
4 x 1/2" CORE PIPE GUIDE LOOKING NORTH AND EAST
DETAIL 4
2 x 1/2" CORE PIPE GUIDE LOOKING NORTH AND EAST
NOTES
LEGEND
These Drawings are Controlled by BSRI-Plant Design Engineering
UNITED STATES DEPARTMENT OF
SAVANNAH RIVER SITE
SAVANNAH RIVER SITE 2005
DEFENSE WASTE PROCESSING FAC
LATE WASH FACILITY
SAMPLE RETURN FROM LABORATORY TO
UNDERGROUND ISOMETRIC
F113-P224 1/2A, F174-P224 1/2B, F176-P224 1/2D CORE PIPES IN PS1B

File ID CMP 03-6.10-3
Page 1 Of 1

Leak Test Data Sheet

WP Page 1 of 4

1. CMP 03-6.10, Rev. 2	2. Work Package No. 1780-LWM-2013-P-001
3. Design Class P.S.	4. Prepared by STEVE GREEN

5. Scope of Work/Item to be Tested:

HYDRO. TEST ON FILTRATE CORE PIPE WELDS
(REF. ISO# P-PI-S-0087) TEST POINT A TO TEST POINT B

6. Type of Test/Pressure: Hydro. ✓ / 200 Pneumatic _____ Other _____

7. Test Medium: Water ✓ Other _____

8. Test Pressure Tolerance: 190 - 210 Actual Test Pressure: 200 # Test Temperature: 45 °F

9. Test Duration: 10 Min. ✓ 30 Min. _____ Other _____

10. M&TE Equipment No: PRESS. GA. CDS 2028 Calibration Due Date 4/4/95
DIG THERMO. CDS 2629 CAL DUE DATE 6-19-95

11. Prehydro Walkdown Complete/Accepted and Ready for Test: EBEdmunds

12.

Remarks/Specific Records	Requirements/References	Criteria/Supplementary
FW 14, 15, 16, 17		

13. Acceptable No Leakage EBEdmunds Acceptable Allowable Leakage _____

13a. Verify restoration of test boundary and lay up requirements are complete.

CDE (signature) EBEdmunds Date 2-23-95

14. Examinations completed for all required attributes

CDE (signature) EBEdmunds Date 2-23-95

15. Inspections completed for all required attributes

CDE (signature) EBEdmunds J L Postma 2/23/95 Date 2-23-95

W/P # 1780-LWM-2013-P-001 page

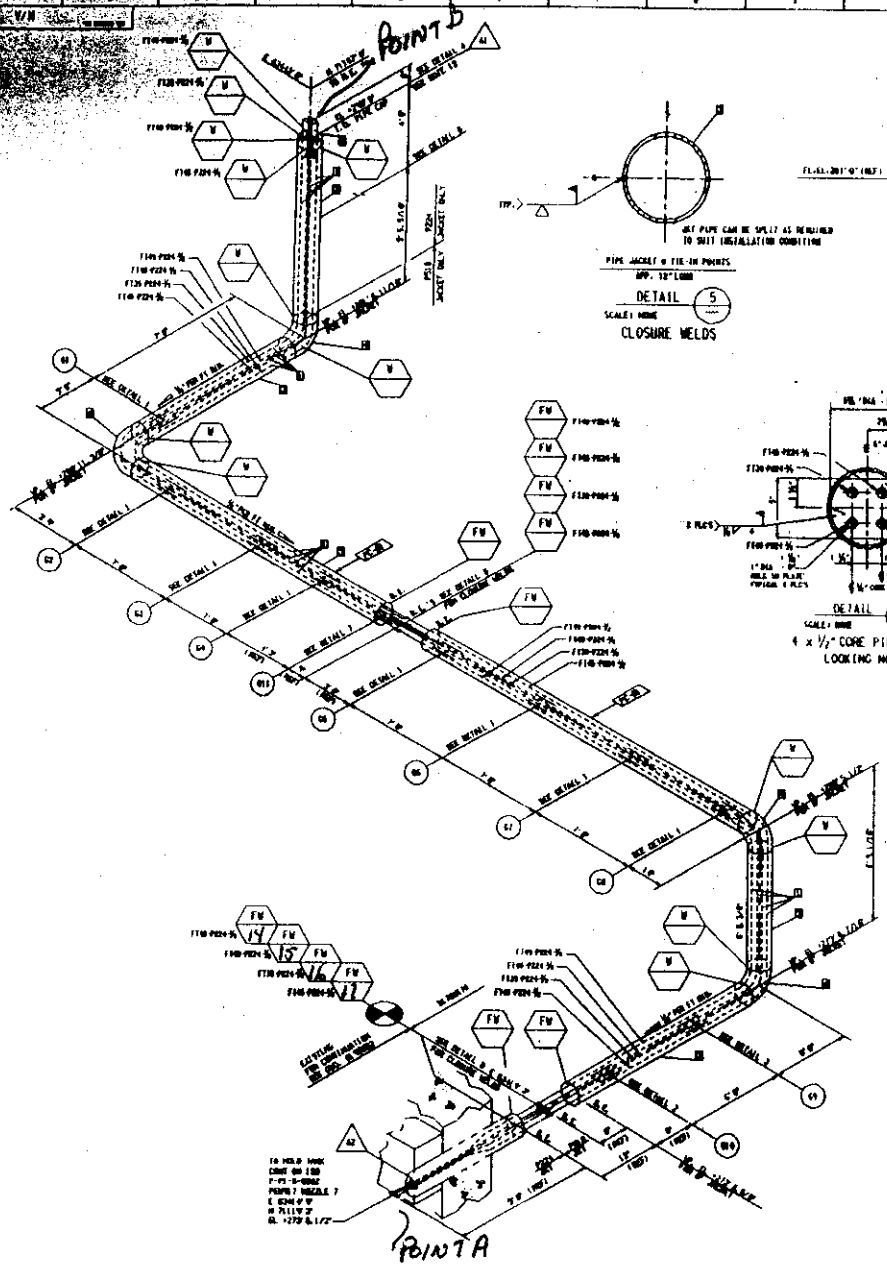

PIPE JACKET @ TIE-IN POINTS
APP. 12" LONG

DETAIL 5
SCALE: NONE
CLOSURE WELDS

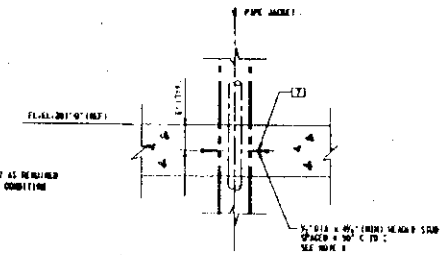

DETAIL 6
SCALE: NONE

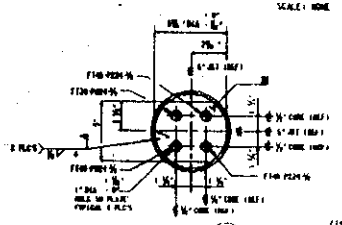

DETAIL 7
SCALE: NONE
4 x ½" CORE PIPE GUIDE
LOOKING NORTH

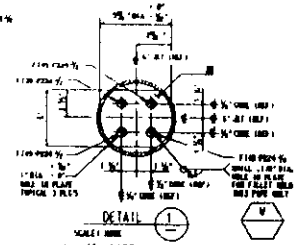

DETAIL 1
SCALE: NONE
4 x ½" CORE PIPE GUIDE
LOOKING NORTH AND EAST

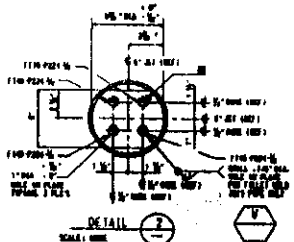

DETAIL 2
SCALE: NONE
4 x ½" CORE PIPE GUIDE
LOOKING EAST

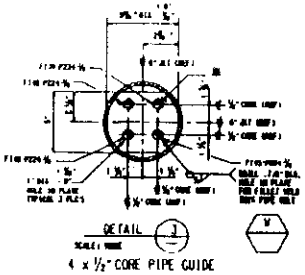

DETAIL 3
SCALE: NONE
4 x ½" CORE PIPE GUIDE
LOOKING EAST

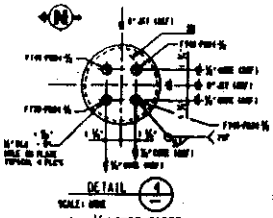

DETAIL 4
SCALE: NONE
4 x ½" CORE PIPES
THRU 6" PIPE CAP

PIPE NO.	DESCRIPTION	WPD (LB)	PIECE NUMBER	QTY
1	PIPE, 5-NPS, SC, ASTM A312-TP304L SMLS, END PER SPEC [illegible]	.1/2	[illegible]	[illegible]
2	PIPE, 5/8 A312-304L SML CS [illegible] END PER SPEC [illegible]	6	[illegible]	[illegible]
3	PIPE, CS [illegible] SML SCH [illegible]	9	[illegible]	[illegible]
	FITTINGS			
4	ELL, 90 DEG SR CS A234-WPB SCH [illegible]	6	[illegible]	4
5	CAP, 5/8 A403-304L SML CS [illegible]	6	[illegible]	1
6	.1/4 PLATE, SS A240 304L		[illegible]	[illegible]
7	WELDED HEADED STUD	.1/2 X 6 3/16	[illegible]	4

LEGEND

(5.) = [illegible] (DETAILS 1 THRU 3)

(4.) = [illegible] (DETAIL 4)

SHOP ORDER # L2009

P P11 S 00007

FIELD	REV. NO.	DATE	REVISION	PREP'D	CLAIM CODE	CHK'D	APPR'D	APPR'D	APPR'D	FIELD	REV. NO.	DATE	REVISION	PREP'D	CLAIM CODE	CHK'D	APPR'D	APPR'D	APPR'D	FIELD	REV. NO.	DATE	REVISION	PREP'D	CLAIM CODE	CHK'D	APPR'D	APPR'D	APPR'D
																				TO CONTRACT	0	11.17.94	ISSUED FOR DEVELOPMENT USE.						
																				TO PROCUREMENT	0		ISSUED FOR CONSTRUCTION USE.						

UNITED STATES DEPARTMENT OF ENERGY
SAVANNAH RIVER SITE

SAVANNAH RIVER SITE 200S AREA
DEFENSE WASTE PROCESSING FACILITY
LATE WASH FACILITY
FILTRATE SAMPLE FROM HOLD TANK TO LABORATORY
UNDERGROUND ISOMETRIC
FT39-P224-1/8A, FT45-P224-1/8A, FT48-P224-1/2C,
FT49-P224-1/8D CORE PIPES IN PS18-6 JACKET (U)

SCALE: NONE | SHEET SIZE: N/A | SHEET: 1 OF 1 | REV: 0

File ID CMP 03-6.10-3
Page 1 Of 1

Leak Test Data Sheet

WP Page 1 of ___

1. CMP03-6.10, Rev. 2	2. Work Package No. 1780-LWM-2013-P-001
3. Design Class PS	4. Prepared by DL POSTMA

5. Scope of Work/Item to be Tested: PERFORM HYDRO TEST ON FILTRATE JACKET PIPE FIELD WELDS (REF. ISO# P-PI-S-0087). TEST PER DESIGN CRITERIA.

6. Type of Test/Pressure: Hydro ✓ 10 PSIG Pneumatic ___ Other ___

7. Test Medium: Water ✓ Other ___

8. Test Pressure Tolerance: 10-10-1 PSIG 11 EBE 2-15-95 Actual Test Pressure: 10.4 II Test Temperature: 58°F

9. Test Duration: 10 Min. ✓ 30 Min. ___ Other ___

10. M&TE Equipment No: PRESS. CAL 4111 DIG THERMO 2629 Calibration Due Date 4-3-95 CAL DUE DATE 6-19-95

11. Prehydro Walkdown Complete/Accepted and Ready for Test: EBEdmunds

12.

Remarks/Specific Records	Requirements/References	Criteria/Supplementary
JACKET FW.'S 60		
61		
62		
63		
79		

13. Acceptable No Leakage EBEdmunds Acceptable Allowable Leakage ___

13a. Verify restoration of test boundary and lay up requirements are complete.

CDE (signature) EBEdmunds Date 2-15-95

14. Examinations completed for all required attributes

CDE (signature) EBEdmunds Date 2-15-95

15. Inspections completed for all required attributes

CDE (signature) EBEdmunds [signature] 2/15/95 Date 2-15-95

PG. 2 OF WIP # 1780-LWM-2013-P-001 PG 42 of 166

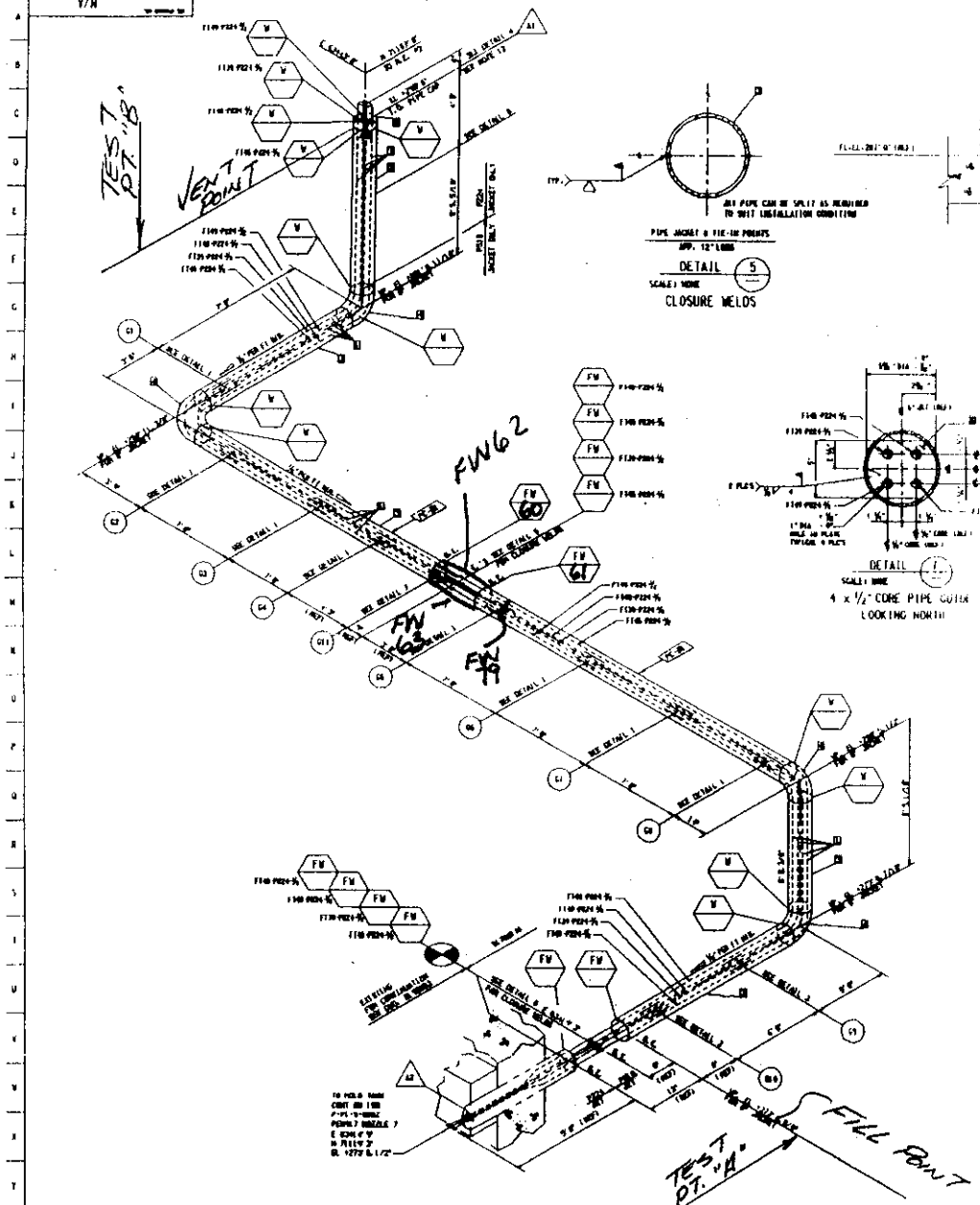

DETAIL 5
SCALE: NONE
CLOSURE WELDS

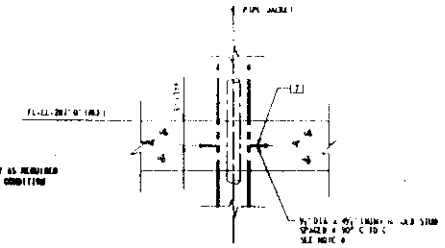

DETAIL 6
SCALE: NONE

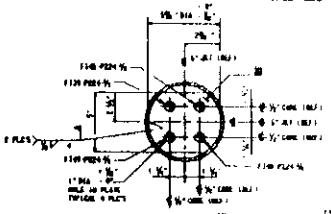

DETAIL 1
SCALE: NONE
4 x 1/2" CORE PIPE CUTOUT
LOOKING NORTH

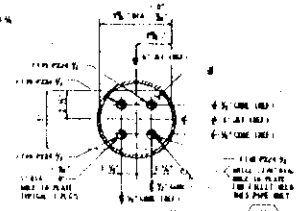

DETAIL 1
SCALE: NONE
4 x 1/2" CORE PIPE CUTOUT
LOOKING NORTH AND EAST

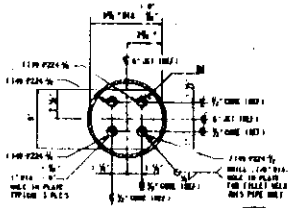

DETAIL 2
SCALE: NONE
4 x 1/2" CORE PIPE GUIDE
LOOKING EAST

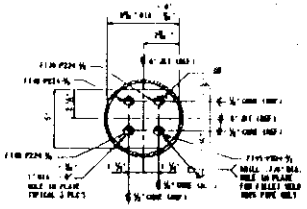

DETAIL 3
SCALE: NONE
4 x 1/2" CORE PIPE CUTOUT
LOOKING EAST

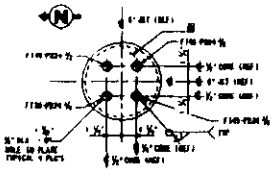

DETAIL 4
SCALE: NONE
4 x 1/2" CORE PIPES
THRU 6" PIPE CAP

NOTES

1. PERFORM A HELIUM LEAK TEST ON CORE PIPE [illegible] NORMAL NONDESTRUCTIVE EXAMINATION STANDARD [illegible] VERIFY THE PIPE LEAK TEST IS IN ACCORDANCE [illegible] STANDARD [illegible] ACCEPTANCE CRITERIA [illegible] THAT CAN BE ACHIEVED BY USING EQUIPMENT [illegible] PROCEDURE. THE GAS PHASE TEST PER P224 [illegible] NO ARTICLE IN SECTION V OF THE ASME CODE AT [illegible] IS ACCEPTABLE IN LIEU OF HELIUM LEAK [illegible] TEST PER ASME [illegible].
2. ALL PIPING TO BE PER ASME B31.3 (2006) [illegible] (CORE) AND PIPE [illegible].
3. FOR HYDROSTATIC TEST PRESSURE SEE PROJECT [illegible] UNDER 0 PSI 5 [illegible].
4. UNDERGROUND PIPING, JACKET AND SLEEVES SHALL BE [illegible] WITH EXTERNAL PROTECTION PER THE FOLLOWING [illegible] IS TO BE COATED PER [illegible] TO A SANDY SITE. [illegible] TO BE COATED PER [illegible] SANDY SOIL [illegible]
5. FUNCTIONAL CLASSIFICATION FOR ALL PIPE [illegible] WILL BE PL.
6. DELETED.
7. DELETED.
8. CONSTRUCTION MAY USE 1/2" DIA. X [illegible] 10-LENGTH OF WELDED STUDS AT THE OR DIRECTION.
9. GUIDE AND SUPPORT MATERIAL IS NOT ALWAYS [illegible] ENGINEERED.
10. DIMENSIONS LESS THAN 2'-0" ARE GIVEN IN [illegible]
11. FOR CORE PIPE STRESS ANALYSIS, SEE CALCULATION [illegible] 5-0005.
12. IF REQUIRED AT DICK PIPE IN JACKET CAN [illegible] PENETRATION, INSTALL 1/2" NOM PIPE [illegible] CAP PER P242 DURING HYDROTESTING. IN LIEU [illegible] LEAK TESTING, SEAL WELD CAP IN PLACE.

LEGEND

C - CORE (DETAILS 1 THRU 3)
A - ANCHOR (DETAIL 1)

SHOP ORDER # L2009

UNITED STATES DEPARTMENT OF ENERGY
SAVANNAH RIVER SITE

SAVANNAH RIVER SITE 200S AREA
DEFENSE WASTE PROCESSING FACILITY
LATE WASH FACILITY
FILTRATE SAMPLE FROM HOLD TANK TO LABORATORY
UNDERGROUND ISOMETRIC
FT39-P224 1/2A, FT45-P224 1/2B, FT48-P224 [illegible]
FT49-P224 1/2D CORE PIPES IN P518.6 JACKET

N/A

REFERENCE STANDARDS

File ID CMP 03-6.10-3
Page 1 Of 1

Leak Test Data Sheet

WP Page 1 of 4

1. CMP 03-6.10, Rev. _____

2. Work Package No. 1780-LWM-Z013-P-001

3. Design Class PS

4. Prepared by STEVE GREEN

5. Scope of Work/Item to be Tested: PERFORM HYDRO. TEST ON CORE PIPES. REFER TO ISO# P-PI-S-0087 R/0

6. Type of Test/Pressure: Hydro ✓ Pneumatic _____ Other _____

7. Test Medium: Water ✓ Other _____

8. Test Pressure Tolerance: 190 + 10% Actual Test Pressure: 200 PSIG Test Temperature: 51°

9. Test Duration: 10 Min. ✓ 30 Min. _____ Other _____

10. M&TE Equipment No: CDS 2453 (PRESS) CDS 2621 (THERM) Calibration Due Date 3/17/95 6/19/95

11. Prehydro Walkdown Complete/Accepted and Ready for Test: T. Cay 2/10/95

12. Remarks/Specific Records | Requirements/References | Criteria/Supplementary

VERIFIED CHLORIDE CONTENT OF TEST SOURCE (WATER) SEE PAGES 3 & 4

FIG 10, 11, 12, 13, 32, 33, 34, 35

13. Acceptable No Leakage ✓ T. Cay 2/10/95 | Acceptable Allowable Leakage _____

13a. Verify restoration of test boundary and lay up requirements are complete.
CDE (signature) T. Cay Date 2/10/95

14. Examinations completed for all required attributes
CDE (signature) T. Cay Date 2/10/95

15. Inspections completed for all required attributes
CDE (signature) T. Cay DL Postma 2/23/95 Date 2/10/95

WP # 1780-LWM-Z013

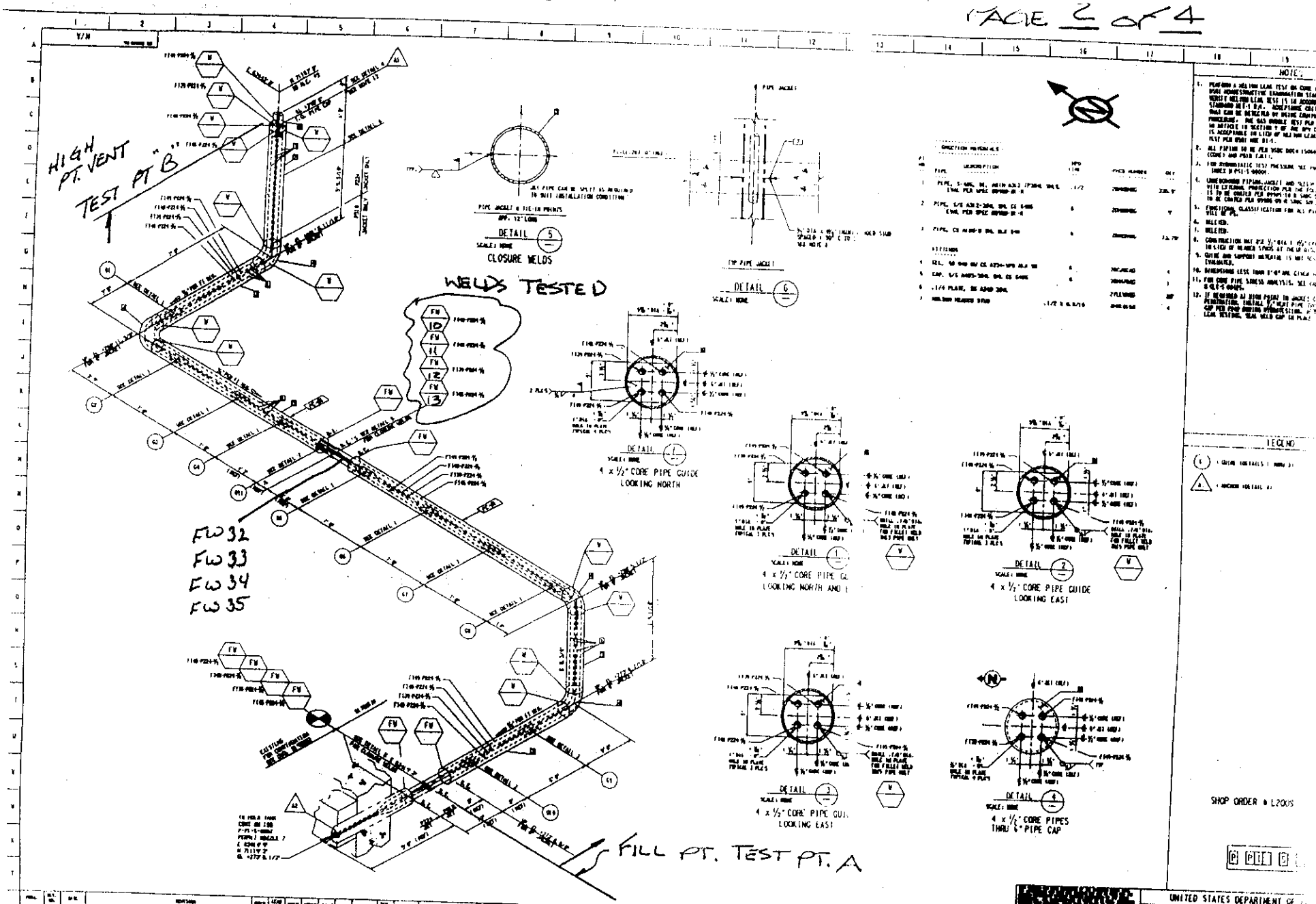
HIGH PT. VENT
TEST PT "B"
WELDS TESTED
FW 32
FW 33
FW 34
FW 35
FILL PT. TEST PT. A
DETAIL 5
CLOSURE WELDS
DETAIL 6
TYP PIPE JACKET
DETAIL 1
4 x 1/2" CORE PIPE GUIDE
LOOKING NORTH
DETAIL 2
4 x 1/2" CORE PIPE GUIDE
LOOKING EAST
DETAIL 3
4 x 1/2" CORE PIPE GUIDE
LOOKING EAST
DETAIL 4
4 x 1/2" CORE PIPES
THRU 6" PIPE CAP
NOTES
LEGEND
SHOP ORDER # L2005
UNITED STATES DEPARTMENT OF
SAVANNAH RIVER SITE
SAVANNAH RIVER SITE 2005
DEFENSE WASTE PROCESSING FAC
LATE WASH FACILITY
FILTRATE SAMPLE FROM HOLD TANK
UNDERGROUND ISOMETRIC
N/A

File ID CMP 03-6.10-3
Page 1 Of 1

Leak Test Data Sheet

WP Page 1 of

1. CMP 03-6.10, Rev. 0 2 3/31/95	2. Work Package No. 1780-LWM-2013-P001
3. Design Class PS	4. Prepared by Christina Ferlita

5. Scope of Work/Item to be Tested: Peform Hydro test on Filtrate jacket pipe field welds (reference. ISO. # P-PI-S0083) Test per design criteria

6. Type of Test/Pressure: Hydro ✓ 10psig Pneumatic ____ Other ____

7. Test Medium: Water ✓ Other ____

8. Test Pressure Tolerance: 10-11 Psig Actual Test Pressure: 10.62 psig Test Temperature: 83°

9. Test Duration: 10 Min. ✓ 30 Min. ____ Other ____

10. M&TE Equipment No: GAUGE CDS4111 DIGITAL THERMOMETER CDS2629 Calibration Due Date 4-3-95 6-19-95

11. Prehydro Walkdown Complete/Accepted and Ready for Test: Steve A. Green

12.

Remarks/Specific Records	Requirements/References	Criteria/Supplementary
FW 3, 50, 51, 52, 74, 84, 85, 86, 87, 89		

13. Acceptable No Leakage ✓	Acceptable Allowable Leakage ____

13a. Verify restoration of test boundary and lay up requirements are complete.

CDE (signature) Steve A. Green Date 3-23-95

14. Examinations completed for all required attributes

CDE (signature) Steve A. Green Date 3-23-95

15. Inspections completed for all required attributes

CDE (signature) [illegible] Date 3-23-95

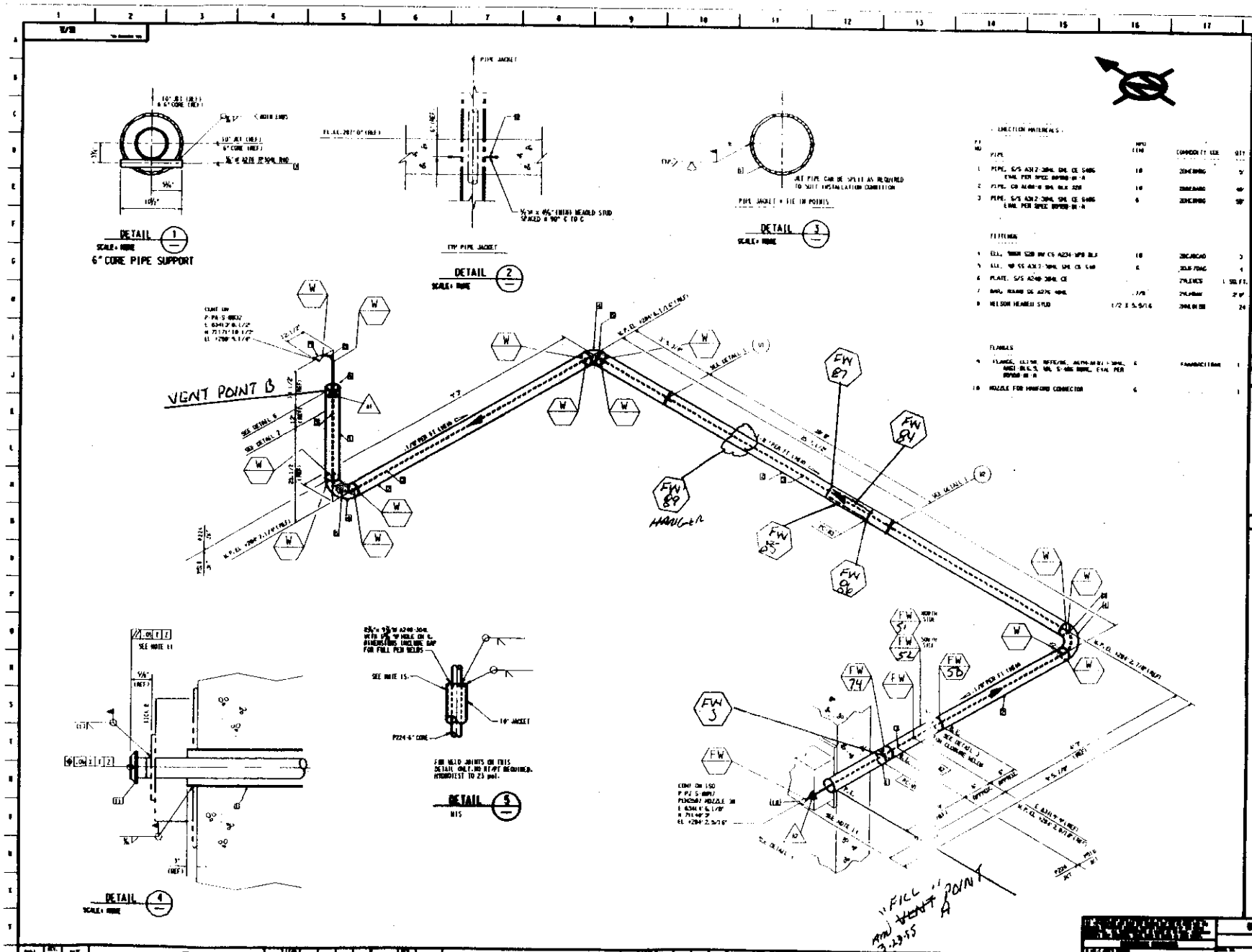

ERECTION MATERIALS

PT NO		MFG ITEM	COMMODITY CODE	QTY
	PIPE			
1	PIPE, S/S A312-304L SML CE S40S EVAL PER SPEC 89900-01-A	10	20HCBRNG	5'
2	PIPE, CS A106-B SML BLK S20	10	20HCBRNG	40'
3	PIPE, S/S A312-304L SML CE S40S EVAL PER SPEC 89900-01-A	6	20HCBRNG	50'
	FITTINGS			
4	ELL, 90DR S20 BW CS A234-WPB BLK	10	20HCBRCAD	3
5	ELL, 90 SS A312-304L SML CE S40	6	20LFTDAG	4
6	PLATE, S/S A240-304L CE		25LFTCS	1 SQ FT.
7	BAR, ROUND CS A276-404L	1/8	25LFTBAR	2' 0"
8	WELDON HEADED STUD	1/2 X 5.5/16	20WLDLSB	24
	FLANGES			
9	FLANGE, CL150, RFFC/RF, A694-A181-304L, ANSI B16.5, 10L S-40S BORE, EVAL PER 89900-01-A	6	FAAAAACTIBAR	1
10	NOZZLE FOR HANFORD CONNECTOR	6		1

NOTES

1. PERFORM A HELIUM LEAK TEST ON CORE PIPE PER P224A AND USING NONDESTRUCTIVE EXAMINATION STANDARD NLT-1 R/F. VERIFY HELIUM LEAK TEST IS IN ACCORDANCE WITH BSRI NEW STANDARD NLT-1 R/F. ACCEPTANCE CRITERIA IS ZERO LEAKAGE THAT CAN BE DETECTED BY USING EQUIPMENT SPECIFIED IN THE PROCEDURE. THE GAS BUBBLE TEST PER P224 AND AS SPECIFIED IN ARTICLE 10 SECTION V OF THE BPV CODE AT 20 +/-5 PSIG IS ACCEPTABLE IN LIEU OF HELIUM LEAK TEST. GAS BUBBLE TEST PER BSRI NDE 01-1.
2. ALL PIPING TO BE PER WSRC DWG 15000-01-A, P CODE P224A (CORE) AND PSIG/P224 (JET).
3. FOR HYDROSTATIC TEST PRESSURE SEE PRODUCT AND SERVICE INDEX H-PSI-5-00001.
4. DELETED.
5. UNDERGROUND PIPING, JACKET AND SLEEVES SHALL BE PROVIDED WITH EXTERNAL PROTECTION PER THE FOLLOWING: STAINLESS STEEL IS TO BE COATED PER 89900-10-A SRAG-51F. CARBON STEEL IS TO BE COATED PER 89900-09-A SRAG-50F. SEE H-PSI-5-00731.
6. FUNCTIONAL CLASSIFICATION FOR ALL PIPE AND COMPONENTS WILL BE PS.
7. DELETED.
8. GUIDE AND SUPPORT MATERIAL IS NOT REQUIRED TO BE CONSIDERED EVALUATED.
9. DIMENSIONS LESS THAN 2'-0" ARE GIVEN IN INCHES.
10. DELETED.
11. PRIMARY DATUMS "X,Y,Z" ARE THE BASIC CONTROL DATUMS TO BE ESTABLISHED BY FIELD FOR REFERENCE PURPOSE. THEY WILL BE USED FOR FIELD INSTALLATION OF STRUCTURES TO ACHIEVE THE REQUIRED POSITIONAL TOLERANCES.
12. DIMENSIONS ARE TRUE LENGTH.
13. FOR CORE PIPE STRESS ANALYSIS, SEE CALCULATION B-CLC-S-00025, REV. A.
14. PIPE FABRICATION SHOP TO ALLOW 2" OF ADDITIONAL LENGTH FOR FIELD FIT UP.
15. IF REQUIRED AT HIGH POINT IN JACKET CONNECTION NEAR DRAIN, DRILL AND TAP HOLE IN JACKET FOR A 1/2" VENT DURING HYDROTESTING. AFTER COMPLETION OF LEAK TESTING, PLACE A PLUG (P240) AND SEAL WELD IN PLACE.

LEGEND

- SUPPORT
- ANCHOR

UNITED STATES DEPARTMENT OF ENERGY

SAVANNAH RIVER SITE

SAVANNAH RIVER SITE 2005 AREA
DEFENSE WASTE PROCESSING FACILITY
LATEWARD FACILITY
FILTRATE LINE FROM FILTER CELL
TO BACKPULSE TANK
UNDERGROUND ISOMETRIC
FT24-P224A-6 CORE/PSIG-10 JACKET (U)

NONE | N/A | 1 OF 1

File ID CMP 03-6.10-3
Page 1 Of 1

Leak Test Data Sheet

WP Page 1 of 4

1. CMP 03-6.10, Rev. 2	2. Work Package No. 1780-LWM-2013-P-001
3. Design Class PS	4. Prepared by DONNA POSTMA

5. Scope of Work/Item to be Tested: PERFORM HYDRO TEST ON FILTRATE CORE PIPE FIELD WELDS (REF. ISO# P-PI-S-0085). TEST PER DESIGN CRITERIA.

6. Type of Test/Pressure: Hydro ✓ 200 PSIG Pneumatic _____ Other _____

7. Test Medium: Water ✓ Other _____

8. Test Pressure Tolerance: 190-209 PSIG Actual Test Pressure: 200 PSIG Test Temperature: 38°

9. Test Duration: 10 Min. ✓ 30 Min. _____ Other _____

GAUGE → CDS 41[illegible]
10. M&TE Equipment No: CDS 2980 DIGITAL THERM. Calibration Due Date 4/10/95 3/23/95

11. Prehydro Walkdown Complete/Accepted and Ready for Test: [signature]

12.

Remarks/Specific Records	Requirements/References	Criteria/Supplementary
FW6 (LINE # FT46)		
FW7 ((FT68)		
FW8 ((FT69)		
FW9 ((FT70)		

13. Acceptable No Leakage ✓ Acceptable Allowable Leakage _____

13a. Verify restoration of test boundary and lay up requirements are complete.
CDE (signature) [signature] Date 2-13-95

14. Examinations completed for all required attributes
CDE (signature) [signature] Date 2-13-95

15. Inspections completed for all required attributes
CDE (signature) [signature] Date 2/13/95

WIP # 1780 LWM-2013-P-001 [illegible]

PG. 2 OF   WIP #1780-LWM-2013-P-001   P-X5006 166

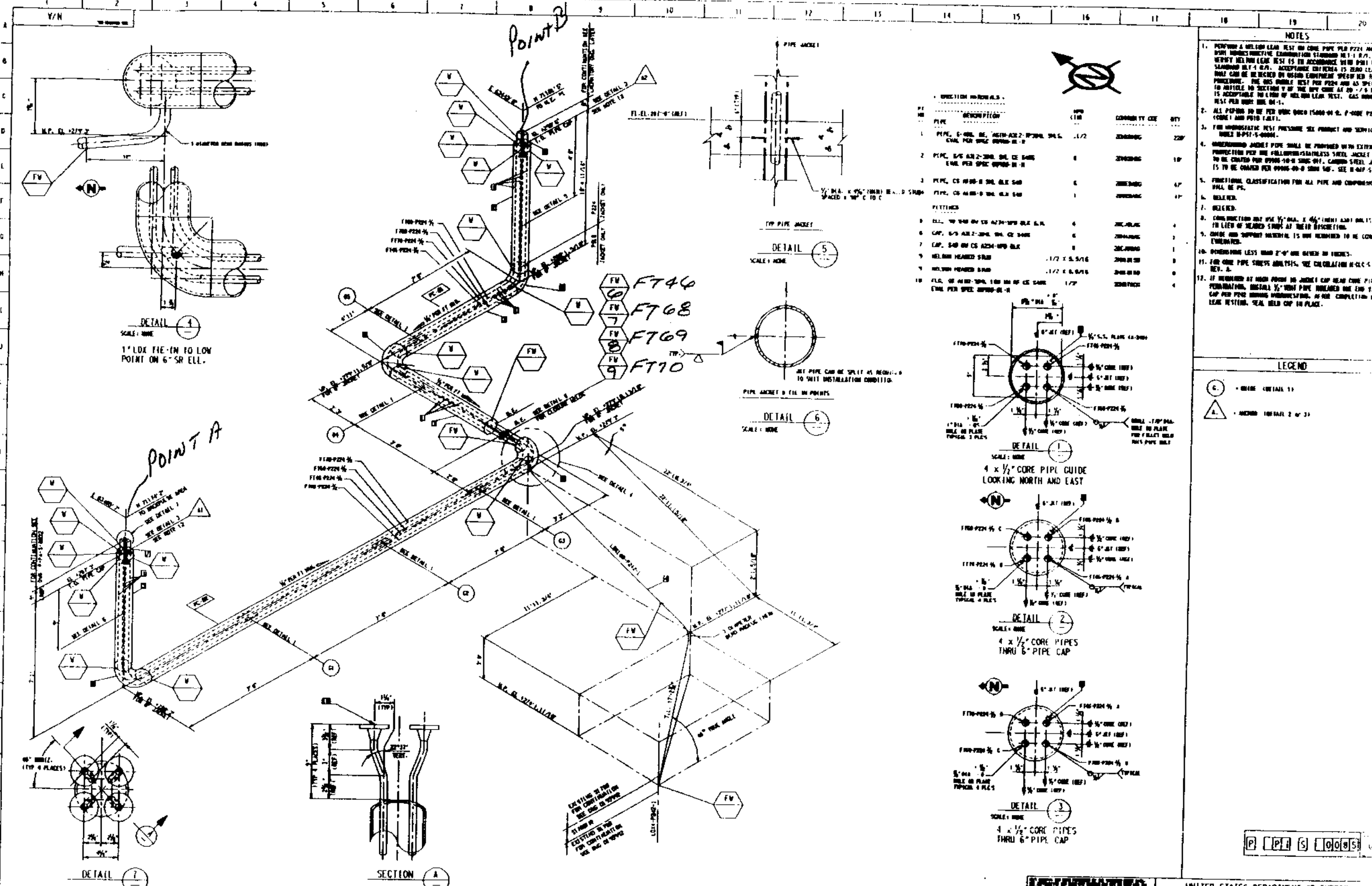

UNITED STATES DEPARTMENT OF ENERGY

SAVANNAH RIVER SITE

SAVANNAH RIVER SITE 200S AREA
DEFENSE WASTE PROCESSING FACILITY
LATE WASH FACILITY
SAMPLE LINE FROM BACKPULSE TO LABORATORY
UNDERGROUND ISOMETRIC
FT46-P224-1/2A, FT68-P224-1/2B, FT69-P224-1/2C,
FT70-P224-1/2D CORE PIPES IN P518-6 JACKET

File ID CMP 03-6.10-3
Page 1 Of 1

Leak Test Data Sheet

WP Page 1 of 2

1. CMP 03-6.10, Rev. 2	2. Work Package No. 1780-LWM-2013-P-001
3. Design Class PS	4. Prepared by STEVE GREEN

5. Scope of Work/Item to be Tested: PERFORM HYDRO. TEST ON FILTRATE JACKET PIPE FIELD WELDS (REF. ISO# P-PI-5-0085). TEST PER DESIGN CRITERIA.

6. Type of Test/Pressure: Hydro. ✓ 11 PSIG Pneumatic _____ Other _____

7. Test Medium _____

8. Test Pressure Tolerance: 10-11 PSIG Actual Test Pressure: 11 PSIG Test Temperature: 53.7°F

9. Test Duration: 10 Min. ✓ 30 Min. _____ Other _____

10. M&TE Equipment No: GAUGE CDS 3173 / DIGITAL THERM. CDS 2980 Calibration Due Date: 4-20-95 / 3-23-95

11. Prehydro Walkdown Complete/Accepted and Ready for Test: Steve A. Green

12.

Remarks/Specific Records	Requirements/References	Criteria/Supplementary
FW 56, 57, 58, 59		

13. Acceptable No Leakage Steve A. Green | Acceptable Allowable Leakage _____

13a. Verify restoration of test boundary and lay up requirements are complete.
CDE (signature) Steve A. Green Date 2/21/95

14. Examinations completed for all required attributes
CDE (signature) Steve A. Green Date 2/21/95

15. Inspections completed for all required attributes
CDE (signature) Dennis L. Pastor Date 2-23-95

WIP # 1780-LWM-2013-P-001

PG. 2 OF 2

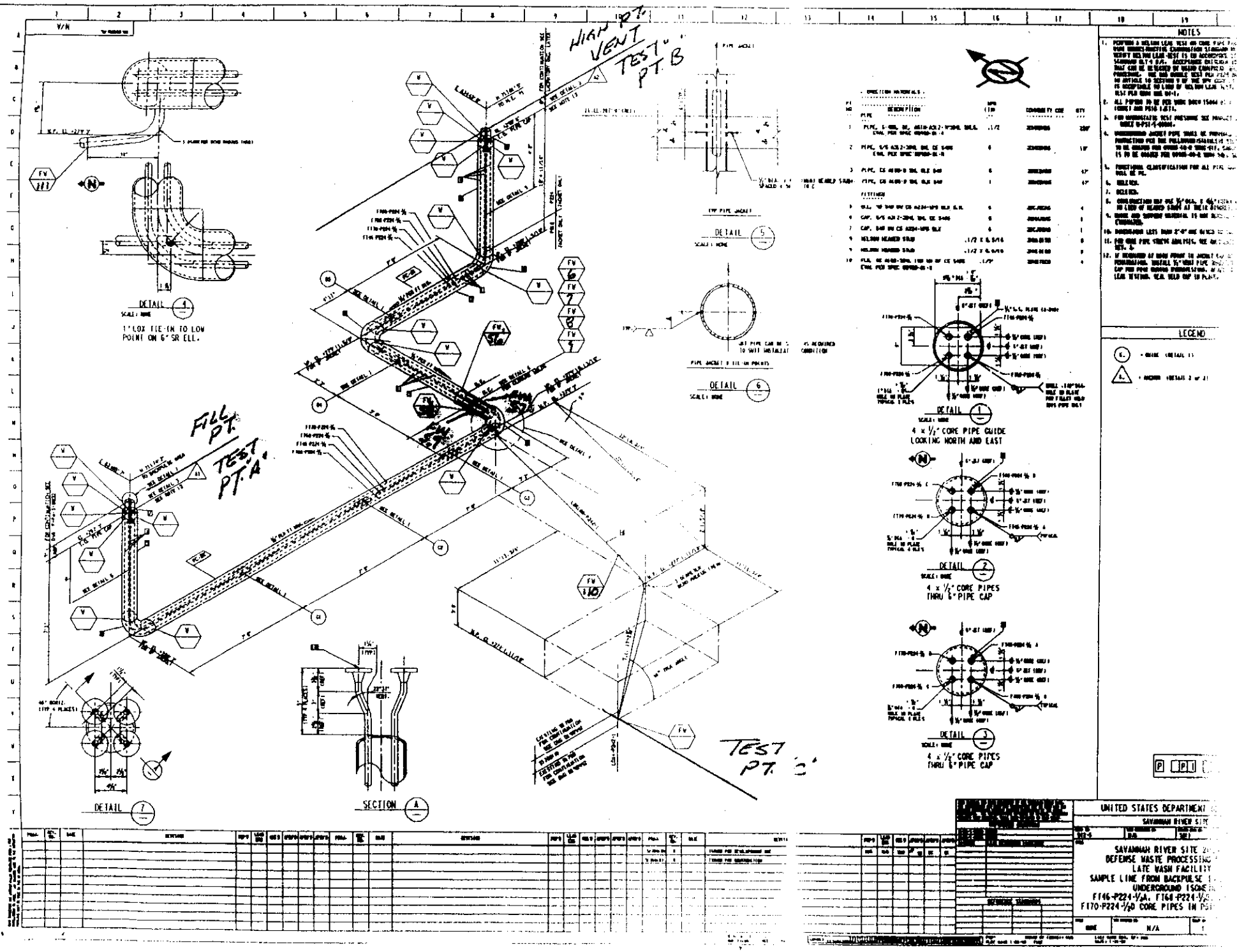

HIGH PT. VENT TEST PT. B
FILL PT. TEST PT. A
TEST PT. C
DETAIL 4
1" LOX TIE-IN TO LOW POINT ON 6" SR ELL.
DETAIL 5
DETAIL 6
DETAIL 1
4 x 1/2" CORE PIPE GUIDE LOOKING NORTH AND EAST
DETAIL 2
4 x 1/2" CORE PIPES THRU 6" PIPE CAP
DETAIL 3
4 x 1/2" CORE PIPES THRU 6" PIPE CAP
DETAIL 7
SECTION A
NOTES
LEGEND
UNITED STATES DEPARTMENT
SAVANNAH RIVER SITE
SAVANNAH RIVER SITE
DEFENSE WASTE PROCESSING
LATE WASH FACILITY
SAMPLE LINE FROM BACKPULSE
UNDERGROUND ISOME
F146-P224-1/2A, F168-P224-1/2
F170-P224-1/2D CORE PIPES IN PS
N/A

File ID CMP 03-6.10-3
Page 1 Of 1

Leak Test Data Sheet

WP Page 1 of 2

1. CMP03-6.10, Rev. 2	2. Work Package No. 1780-LWM-2013-P-001
3. Design Class PS	4. Prepared by STEVE GREEN

5. Scope of Work/Item to be Tested: PERFORM HYDRO. TEST ON LEAK DETECTION PIPING FIELD WELDS. (REF. ISO# P-PI-S-0085). TEST PER DESIGN CRITERIA.

6. Type of Test/Pressure: Hydro ✓ / 52 PSIG Pneumatic _____ Other _____

7. Test Medium: Water ✓ Oil _____

8. Test Pressure Tolerance: 50-55 PSIG Actual Test Pressure: 52 PSIG Test Temperature: 53.7°F

9. Test Duration: 10 Min. ✓ 30 Min. _____ Other _____

10. M&TE Equipment No: GAUGE CDS3173 DIGITAL THERM. CDS 2980 Calibration Due Date 4-20-95 3-23-95

11. Prehydro Walkdown Complete/Accepted and Ready for Test: Steve A. Green

12.

Remarks/Specific Records	Requirements/References	Criteria/Supplementary
FIN. 110 & 111		

13. Acceptable No Leakage Steve A. Green | Acceptable Allowable Leakage _____

13a. Verify restoration of test boundary and lay up requirements are complete.

CDE (signature) Steve A. Green Date 2/21/95

14. Examinations completed for all required attributes

CDE (signature) Steve A. Green Date 2/21/95

15. Inspections completed for all required attributes

CDE (signature) Donna L. Pastor Date 2-23-95

WP # 1780-LWM-2013-P-001 page 55 of 144

PG. 2 OF 2

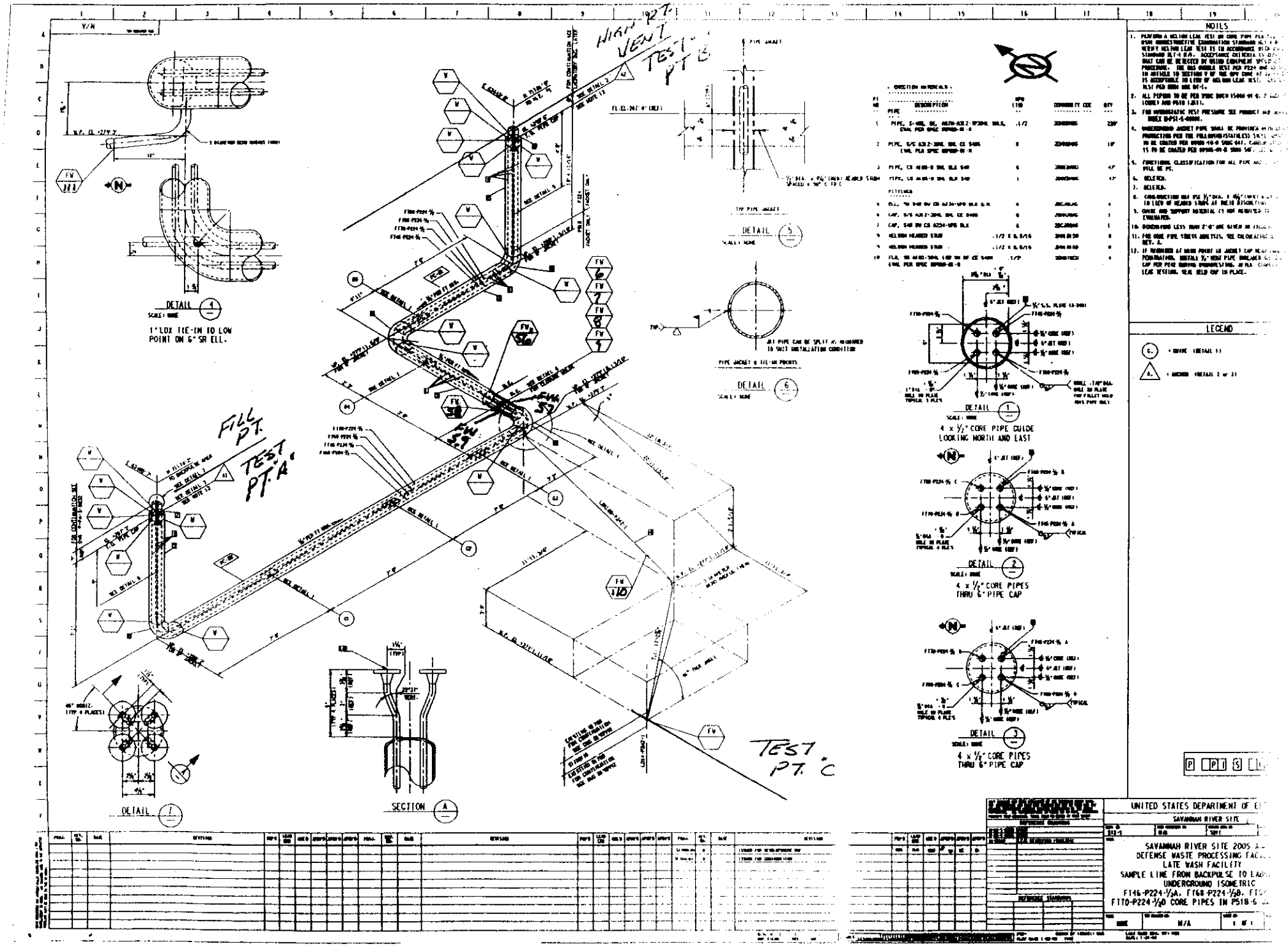

HIGH PT. VENT
TEST PT. B
FILL PT.
TEST PT. A
TEST PT. C
DETAIL 4
1" LOX TIE-IN TO LOW POINT ON 6" SR ELL.
DETAIL 5
DETAIL 6
DETAIL 1
4 x ½" CORE PIPE GUIDE LOOKING NORTH AND EAST
DETAIL 2
4 x ½" CORE PIPES THRU 6" PIPE CAP
DETAIL 3
4 x ½" CORE PIPES THRU 6" PIPE CAP
DETAIL 7
SECTION A
NOTES
LEGEND
UNITED STATES DEPARTMENT OF E
SAVANNAH RIVER SITE
SAVANNAH RIVER SITE 2005
DEFENSE WASTE PROCESSING FAC
LATE WASH FACILITY
SAMPLE LINE FROM BACKPULSE TO LA
UNDERGROUND ISOMETRIC
F146-P224-½A, F168-P224-½B, F
F170-P224-½D CORE PIPES IN P51B-6
N/A

File ID CMP 03-6.10-3
Page 1 Of 1

Leak Test Data Sheet

WP Page ___ of ___

1. CMP03-6.10, Rev. 2	2. Work Package No. 1780-LWM-2013-P-001
3. Design Class P.S.	4. Prepared by STEVE GREEN

5. Scope of Work/Item to be Tested: PERFORM HYDRO. TEST ON FILTRATE CORE PIPE FIELD WELDS (REF. ISO# P-PI-S-0084)

6. Type of Test/Pressure: Hydro. ✓ / 200PSIG Pneumatic ___ Other ___

7. Test Medium: Water ___ Other ___

8. Test Pressure Tolerance: 190-210 Actual Test Pressure: ___ Test Temperature: 66°F

9. Test Duration: 10 Min. ✓ 30 Min. ___ Other ___

10. M&TE Equipment No: CDS 2028 Calibration Due Date 4-4-95

11. Prehydro Walkdown Complete/Accepted and Ready for Test: [signature]

12.

Remarks/Specific Records	Requirements/References	Criteria/Supplementary
FW4, 36R-1		

DIGITAL THERMOMETER/CDS# 2980 DUE DATE 3-23-95

13. Acceptable No Leakage ✓ Acceptable Allowable Leakage ___

13a. Verify restoration of test boundary and lay up requirements are complete.
CDE (signature) [signature] Date 2-27-95

14. Examinations completed for all required attributes
CDE (signature) [signature] Date 2-27-95

15. Inspections completed for all required attributes
CDE (signature) [signature] Date 3-9-95

WP # 1780-LWM-2013-A001 Page 1 of 1

WIT A 1-00 LWM-2013 F-00 ... 6 166

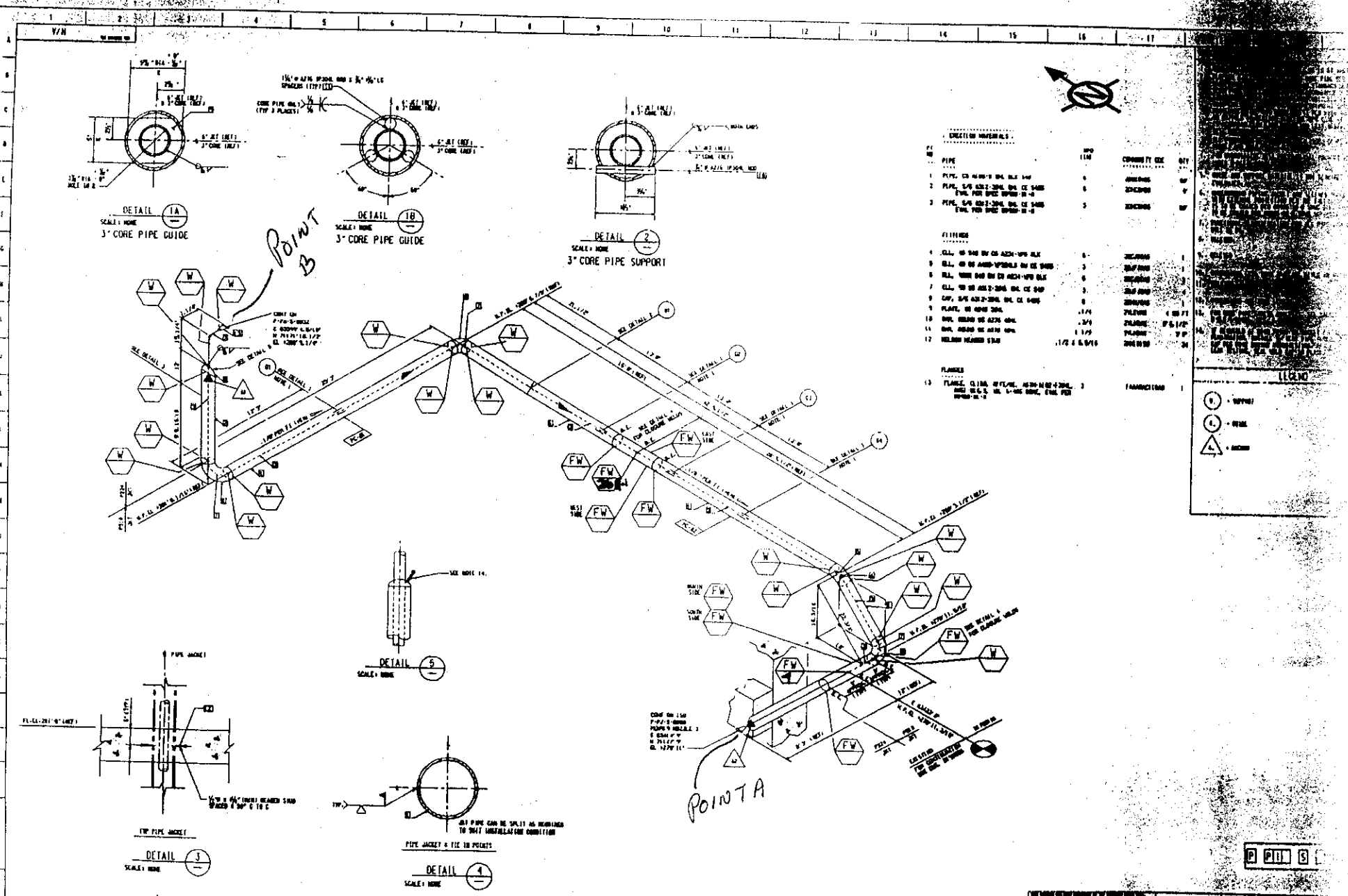

UNITED STATES DEPARTMENT OF ...
SAVANNAH RIVER SITE

SAVANNAH RIVER SITE 2005 A...
DEFENSE WASTE PROCESSING F...
LATE WASH FACILITY
FILTRATE LINE FROM BACKPULS...
TO HOLD TANK
UNDERGROUND ISOMETRIC
FT27-P224A-3 CORE/PS1B-6 JACKET

N/A

Leak Test Data Sheet

WP Page 1 of ___

1. CMP 03-6.10, Rev. 2	2. Work Package No. 1780-LWM-2013-P-001
3. Design Class PS	4. Prepared by DONNA POSTMA

5. Scope of Work/Item to be Tested: PERFORM HYDRO TEST ON FILTRATE CORE PIPE FIELD WELDS (REFERENCE ISO# P-PI-S-00082). TEST PER DESIGN CRITERIA. REF. M-DCF-S-00558 · M-PSI-S-00001 C/2 DLP 3/21/95

6. Type of Test/Pressure: Hydro ✓ ~~280~~ 300 PSIG DLP 3/21/95 Pneumatic ___ Other ___

7. Test Medium: Water ✓ Other ___

8. Test Pressure Tolerance: ~~190-209~~ 300-330 PSIG DLP 3/21/95 Actual Test Pressure: 310 PSI Test Temperature: 75°F

9. Test Duration: 10 Min. ✓ DLP 3/21/95 30 Min. ___ Other 1 HR.

10. M&TE Equipment No: CDS 2629 (THERMOMETER) CDS 2936 (GAUGE) Calibration Due Date 6-19-95 5-28-95

11. Prehydro Walkdown Complete/Accepted and Ready for Test: Donna L Postma

12.

Remarks/Specific Records	Requirements/References	Criteria/Supplementary
FW1		

13. Acceptable No Leakage D L Postma — Acceptable Allowable Leakage 0

13a. Verify restoration of test boundary and lay up requirements are complete.

CDE (signature) D L Postma Date 3-21-95

14. Examinations completed for all required attributes

CDE (signature) D L Postma Date 3-21-95

15. Inspections completed for all required attributes

CDE (signature) [illegible] Date 5/15/95

WIPF 1780LWM-2013-P-001

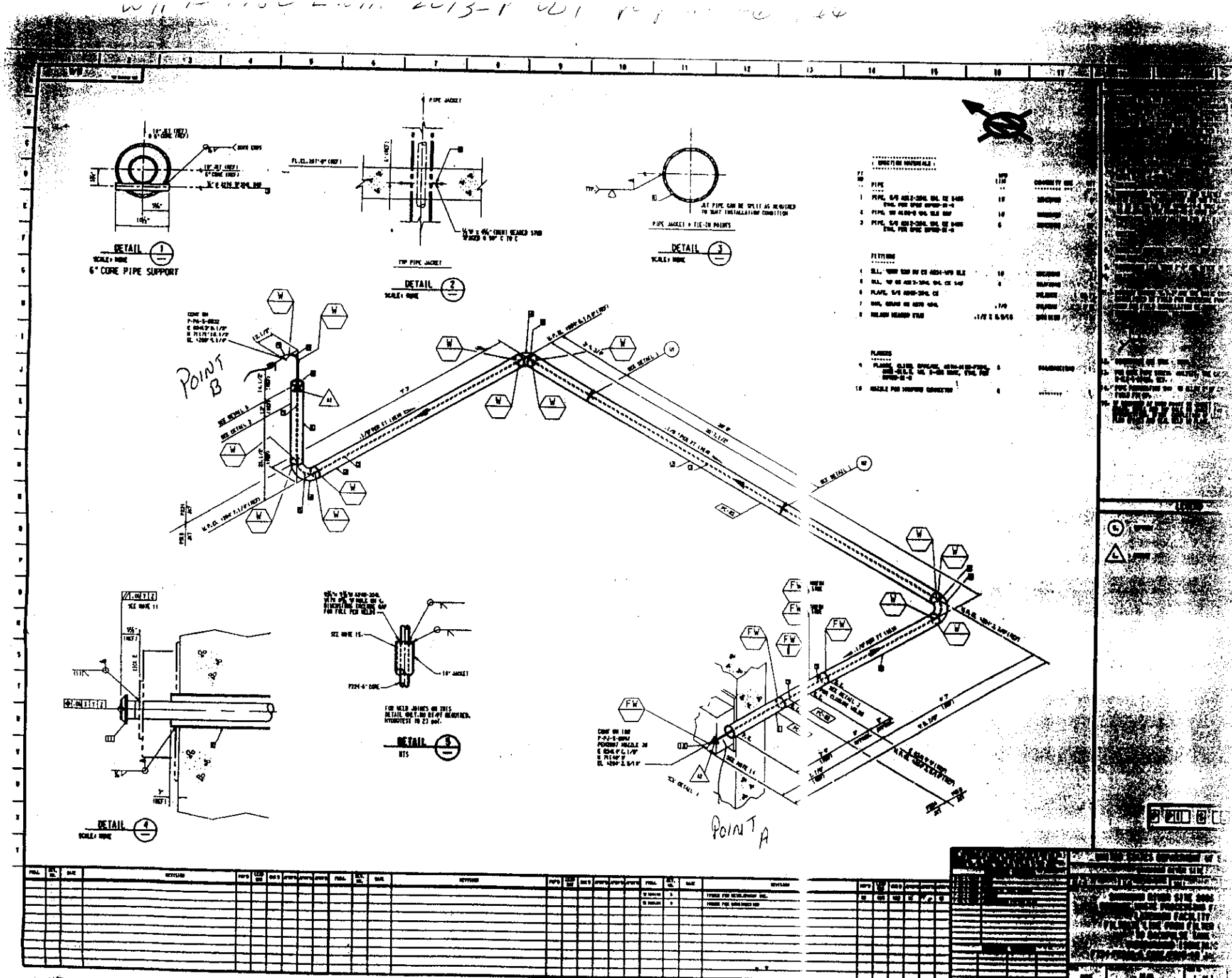
DETAIL 1
6" CORE PIPE SUPPORT
DETAIL 2
TYP PIPE JACKET
DETAIL 3
PIPE JACKET + TIE-IN POINTS
POINT B
POINT A
DETAIL 4
DETAIL 5
FOR WELD JOINTS ON THIS DETAIL ONLY, NO RT/PT REQUIRED. HYDROTEST TO 23 psi.
FW
W

File ID CMP 03-6.10-3
Page 1 Of 1

Leak Test Data Sheet

WP Page 1 of ___

1. CMP 03-6.10, Rev. 2	2. Work Package No. 1780-LWM-2013-P-001
3. Design Class P5	4. Prepared by DONNA POSTMA

5. Scope of Work/Item to be Tested: PERFORM HYDRO TEST ON FILTRATE CORE PIPE FIELD WELDS (REFERENCE ISO# P-PI-S-0083). TEST PER DESIGN CRITERIA. REF. M-DCF-S-00558 & M-PSI-S-00001 R/2 DLP 3/21/95

6. Type of Test/Pressure: Hydro ✓ ~~200 PSIG~~ 300 PSIG DLP 3/21/95 Pneumatic ___ Other ___

7. Test Medium: Water ✓ Other ___

8. Test Pressure Tolerance: ~~190-209~~ 300-330 DLP 3/21/95 PSIG Actual Test Pressure: 310 PSIG Test Temperature: 89°

9. Test Duration: 10 Min. ✓ AG 5-15-95 30 Min. ___ Other ✓ 1 HR

10. M&TE Equipment No: GAGE CDS 2369 DIGITAL THERM. CDS 2190 Calibration Due Date 7-12-95 9-8-95

11. Prehydro Walkdown Complete/Accepted and Ready for Test: [signature]

12.

Remarks/Specific Records	Requirements/References	Criteria/Supplementary
FW2		

13. Acceptable No Leakage [signature] Acceptable Allowable Leakage ___

13a. Verify restoration of test boundary and lay up requirements are complete.
CDE (signature) [signature] Date 5-15-95

14. Examinations completed for all required attributes
CDE (signature) [signature] Date [illegible]

15. Inspections completed for all required attributes
CDE (signature) [signature] Date [illegible]

W/P # 1780-LWM-2013-P-001 Page 64 of 66

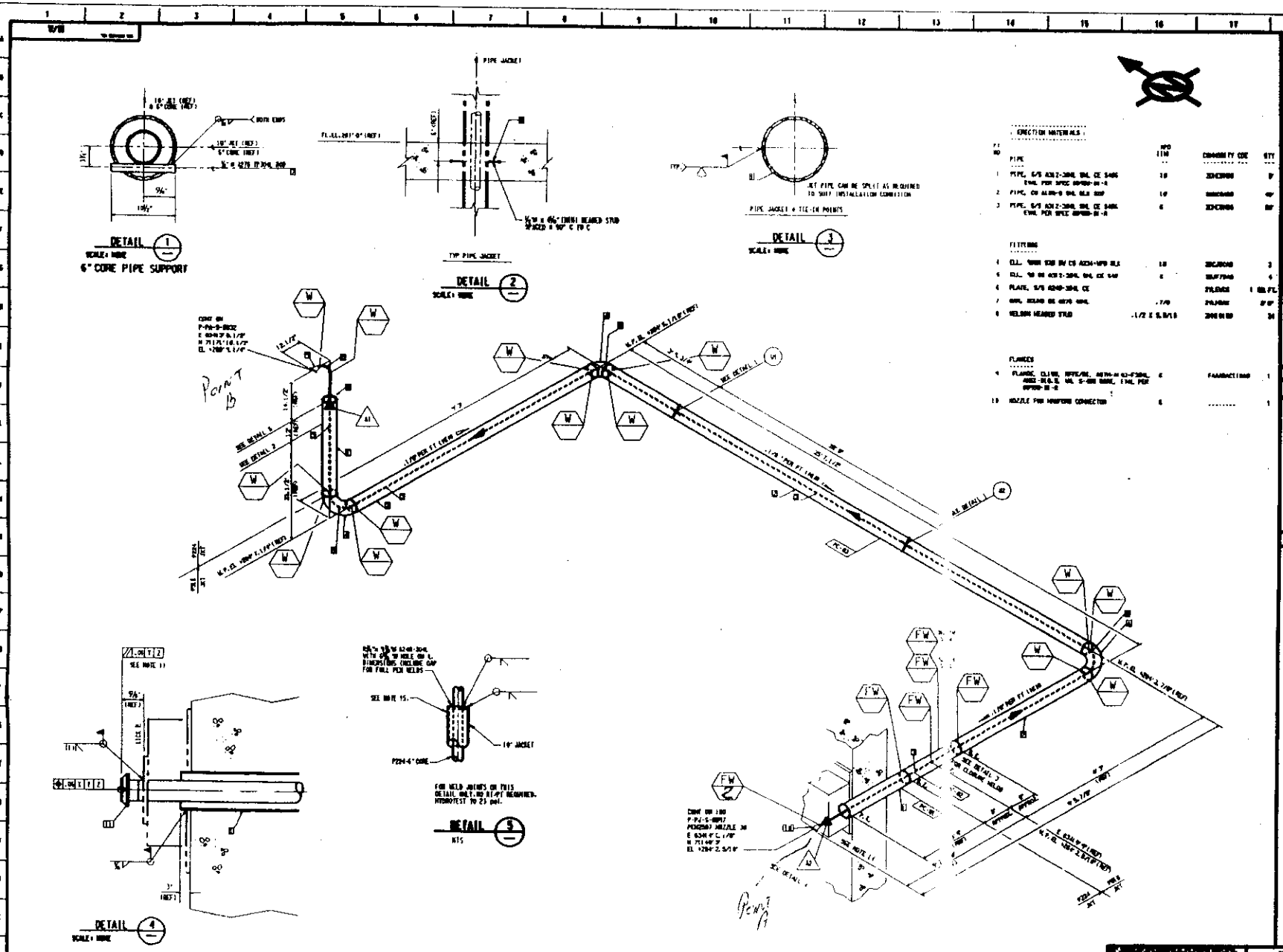

ERECTION MATERIALS

PT NO		NPD	CONVERSITY CODE	QTY
	PIPE			
1	PIPE, S/S A312-304L SML CE S40S EVAL PER SPEC 00900-00-A	10	[illegible]	[illegible]
2	PIPE, CS A106-B SML SLS SCP	10	[illegible]	[illegible]
3	PIPE, S/S A312-304L SML CE S40S EVAL PER SPEC 00900-00-A	6	[illegible]	[illegible]
	FITTINGS			
4	ELL, [illegible] CS A234-WPB SLS	10	[illegible]	3
5	ELL, [illegible] A312-304L SML CE S40	6	[illegible]	4
6	PLATE, S/S A240-304L CE		[illegible]	1 SQ.FT.
7	[illegible]	.7/0	[illegible]	[illegible]
8	WELDON HEADED STUD	.1/2 X 5.5/10	[illegible]	34
	FLANGES			
9	FLANGE, CLIVE, RFFS/RF, [illegible]	6	FAAABACTIBAD	1
10	NOZZLE FOR MANIFORD CONNECTOR	6	.....	1

NOTES

1. PERFORM A HELIUM LEAK TEST ON [illegible] PIPE PER [illegible] WITH CONSTRUCTIVE EXAMINATION STANDARD [illegible] WELDON LEAK TEST IS IN ACCORDANCE WITH [illegible] STANDARD [illegible] ADDITIONAL MATERIAL IS [illegible] THAT CAN BE REJECTED BY [illegible] EQUIPMENT [illegible] PROCEDURE. [illegible] TEST PER [illegible] IN ARTICLE 10 SECTION V OF THE [illegible] CODE [illegible] IS ACCEPTABLE IN LIEU OF HELIUM LEAK TEST. [illegible] TEST PER [illegible] NOTE 4.
2. ALL PIPING TO BE PER [illegible] (NONE) AND [illegible].
3. FOR [illegible] TEST PRESSURE SEE PROJECT [illegible] [illegible]
4. DELETED.
5. UNDERGROUND PIPING, JACKET AND SLEEVES SHALL BE [illegible] WITH EXTERNAL PROTECTION FOR THE FOLLOWING [illegible] IS TO BE [illegible] PER [illegible] SHOP-SAT. [illegible] TO BE COATED PER [illegible] SHOP-SAT. [illegible]
6. FUNCTIONAL CLASSIFICATION FOR ALL PIPE [illegible] WILL BE P1.
7. DELETED.
8. CHOKE AND SUPPORT MATERIAL IS NOT [illegible] EVALUATED.
9. DIMENSIONS LESS THAN 2'-0" ARE GIVEN IN [illegible]
10. DELETED.
11. PRIMARY DATUMS "L.T.2" ARE THE BASIC [illegible] ESTABLISHED BY FIELD FOR REFERENCE PURPOSES [illegible] USED FOR FIELD INSTALLATION OF STRUCTURALS [illegible] REQUIRED POSITIONAL TOLERANCES.
12. DIMENSIONS ARE THIN [illegible]
13. FOR CORE PIPE SIZES [illegible] ANALYSIS. SEE CALCULATION [illegible] M-OLC-S-00425, SEV.
14. PIPE FABRICATION [illegible] TO ALLOW 2" OF ANGULAR FIELD FIT-UP.
15. IF [illegible] AT [illegible] POINT IN JACKET [illegible] DRILL AND TAP HOLE IN JACKET [illegible] [illegible]. AFTER COMPLETION OF LEAK [illegible] PLUG (P[illegible]) AND SEAL WELD IN PLACE.

LEGEND

(R) = SUPPORT

(A) = ANCHOR

UNITED STATES DEPARTMENT OF [illegible]

SAVANNAH RIVER SITE

SAVANNAH RIVER SITE 2006 [illegible]
DEFENSE WASTE PROCESSING FACILITY
LATENAGE FACILITY
FILTRATE LINE FROM FILTER CELL
TO BACKPULSE TANK
UNDERGROUND ISOMETRIC
FT24-P224A-6 CORE/PSIB-10 JACKET

NONE | [illegible] | 1 OF 1

Exhibit 1

SRS	NONDESTRUCTIVE EXAMINATION REPORT VACUUM BOX LEAK TESTING			REPORT NUMBER
IR NO. N/A				PROJECT NUMBER 1780
AREA LATE WASH	WORK PACKAGE NO. 1780-LWM-2013-P001	TEST VACUUM PSI/Hg 12 IN. HG.		DATE 3/23/95
ISO NO./DWG P-PI-S-0083 R/1	LINE NO./PART ID FT-24	BUBBLE SOLUTION TYPE LEAK TEC 277C		BSRI PROC. NO. LT-VB R/A
CODE/WELD CLASS ANSI/ASME B31.3	GAGE M&TE NO. CPS 463A DUE DATE: 8/28/95	PIPE DIA 10"	MATL TYPE S/S, C/S	TEMP: MATL 75°F
NUMBER OF WELDS TESTED 1	NUMBER OF LEAKS DETECTED: 0	TYPE VACUUM PUMP USED VARIAN		

PART OR WELD NUMBER	DISPOSITION ACC	DISPOSITION REJ	REMARKS
FW5	X		

SKETCH:

NOTES:	EXAMINER LEVEL	DATE
USED CONTACT THERM. CK 3/23/95	[signature] II	3/23/95
	INTERPRETER LEVEL [signature] II	DATE 3/23/95
	WITNESSED BY N/A	DATE

MQS-NDE-024
Rev. 2 5/94 BSRI

W/P # 1780-LWM-2013-P001 Rev. 4 Page 5 of 5

PAGE 76 OF 86

Exhibit 1

SRS	NONDESTRUCTIVE EXAMINATION REPORT VACUUM BOX LEAK TESTING			REPORT NUMBER
IR NO. N/A				PROJECT NUMBER 1780
AREA -S LATE WASH	WORK PACKAGE NO. 1780-LWM-2013-P-001	TEST VACUUM PSI/Hg 6 IN. Hg		DATE 2/28/95
ISO NO./DWG P-PI-S-0084/0 P-PI-S-0088/0	LINE NO./PART ID FILTRATE JACKET ~~FOR~~ ~~FT 24~~ 2/28/95 ~~LFT39, FT45, FT40, FT49~~	BUBBLE SOLUTION TYPE LEAK TEC 217C		BSRI PROC. NO. LT-VB REV. 4
CODE/WELD CLASS ANSI/ASME B31.3	GAGE M&TE NO. CPS 396 DUE DATE: 7/18/95	PIPE DIA 6"	MATL TYPE SS	TEMP: MATL 65°F
NUMBER OF WELDS TESTED 6	NUMBER OF LEAKS DETECTED: 0	TYPE VACUUM PUMP USED MARIAN SD-200		

PART OR WELD NUMBER	DISPOSITION ACC	DISPOSITION REJ	REMARKS
FW5	✓		P-PI-S-0084
FW53	✓		
FW54	✓		
FW55	✓		
FW75	✓		
FW77R1	✓		P-PI-S-0088

SKETCH:

NOTES:	EXAMINER	LEVEL	DATE
USED CONTACT THERMOMETER CH 2/28/95	[signature]	II	2/28/95
	INTERPRETER	LEVEL	DATE
	[signature]	II	2/28/95
	WITNESSED BY N/A		DATE

MQS-NDE-024
Rev. 2 5/94 BSRI

MQS 003 FORM
JOB BSRI NDE-2

WIP # 1780-LWM-2013-P-001 page 4 of 10

PAGE 77 OF 96

Exhibit 1

SRS	**NONDESTRUCTIVE EXAMINATION REPORT VACUUM BOX LEAK TESTING**		REPORT NUMBER
IR NO. N/A			PROJECT NUMBER 1780
AREA S - LATE WASTE	WORK PACKAGE NO. 1780-LWM-2013-P001	TEST VACUUM PSI/Hg 6 IN. Hg	DATE 2/28/95
ISO NO./DWG P-PI-S-0087/0	LINE NO./PART ID FILTRATE SAMPLE	BUBBLE SOLUTION TYPE LEAK TEC 277C	BSRI PROC. NO. LT-VB REV. 4
CODE/WELD CLASS ASME/ANSI B31.3i	GAGE M&TE NO. CDS 396 DUE DATE 7/18/95	PIPE DIA 6" / MATL TYPE SS	TEMP: MATL 65°F
NUMBER OF WELDS TESTED: 5	NUMBER OF LEAKS DETECTED: 0	TYPE VACUUM PUMP USED MARIAH SD-200	

PART OR WELD NUMBER	DISPOSITION ACC	DISPOSITION REJ	REMARKS
FW 18	✓		
FW 64	✓		
FW 65	✓		
FW 66	✓		
FW 76	✓		

SKETCH:

NOTES:	EXAMINER [signature] LEVEL II	DATE 2/28/95
	INTERPRETER [signature] LEVEL II	DATE 2/28/95
	WITNESSED BY N/A	DATE

MQS-NDE-024
Rev. 2 5/94 BSRI

MQS 003 FORM
JOB BSRI-NDE-2

WIP # 1780-LWM-2013-P-001 page 40 of 61

PAGE 78 OF 96

Exhibit 1

SRS	NONDESTRUCTIVE EXAMINATION REPORT VACUUM BOX LEAK TESTING		REPORT NUMBER
IR NO. N/A			PROJECT NUMBER 1780
AREA S LATE WASH	WORK PACKAGE NO. 1780-LWM-2013-P-001	TEST VACUUM PSI/Hg 5" Hg	DATE 2-22-95
ISO NO./DWG P-PI-S-0088	LINE NO./PART ID 6" JACKET	BUBBLE SOLUTION LEAK TEC TYPE 277C	BSRI PROC NO BT-1 R11
CODE/WELD CLASS ASME/ANSI B31.3	GAGE M&TE NO. CDS 4451 DUE DATE: 3/14/95	PIPE DIA 6" MATL TYPE C/S	TEMP: MATL 45°F
NUMBER OF WELDS TESTED 5	NUMBER OF LEAKS DETECTED 0	TYPE VACUUM PUMP USED VARIAN SD-200	

PART OR WELD NUMBER	DISPOSITION ACC	DISPOSITION REJ	REMARKS
FW-27	✓		
FW-71	✓		
FW-72	✓		
FW-73	✓		
FW-77	✓		

SKETCH:

NOTES:	EXAMINER	LEVEL	DATE
QG THERMO CDS 2629 6/19/95 EBE 2/22/95	EBEdmunds	II	2-22-95
	INTERPRETER EBEdmunds	LEVEL II	DATE 2-22-95
	WITNESSED BY N/A		DATE

MOS-NDE-024
Rev. 2 5/94 BSRI

WIPH 1780-LWM-2013-P-001 Page 149 of 166

PAGE 79 OF 96

Exhibit 1

SRS	NONDESTRUCTIVE EXAMINATION REPORT VACUUM BOX LEAK TESTING			REPORT NUMBER
IR NO. N/A				PROJECT NUMBER 1780
AREA S LATE WASH	WORK PACKAGE NO. 1780-LWM-2013-P-001	TEST VACUUM PSI/Hg 6 IN. Hg		DATE 3/2/95
ISO NO./DWG P-PI-S-0084 R0	LINE NO./PART ID 6" JACKET	BUBBLE SOLUTION LEAK TEC TYPE 277C		BSRI PROC. NO. LT-VB REV 4
CODE/WELD CLASS ANSI/ASME B31.3	GAGE M&TE NO. CDS 396 DUE DATE: 4/18/95	PIPE DIA 6"	MATL TYPE C/S	TEMP: MATL 57°F
NUMBER OF WELDS TESTED: 4	NUMBER OF LEAKS DETECTED: 0	TYPE VACUUM PUMP USED VARIAN SD-200		

PART OR WELD NUMBER	DISPOSITION ACC	DISPOSITION REJ	REMARKS
FW-80	✓		
FW-81	✓		
FW-82	✓		
FW-83	✓		

SKETCH:

NOTES:	EXAMINER	LEVEL	DATE
DIG THERMO 2629 6-19-95	E B Edmunds	II	3/2/95
	INTERPRETER	LEVEL	DATE
	E B Edmunds	II	3/2/95
	WITNESSED BY		DATE

MQS-NDE-024
Rev. 2 5/94 BSRI

MQS 003 FORM
JOB BSRI-NDE-2

W/P # 1780-LWM-2013-P-001 Page 150 of 166

PAGE 80 OF 96

Exhibit 1

SRS	NONDESTRUCTIVE EXAMINATION REPORT VACUUM BOX LEAK TESTING		REPORT NUMBER
IR NO. N/A			PROJECT NUMBER 1280
AREA S-LATE WASH	WORK PACKAGE NO. 1280-LWN-2013-P-001	TEST VACUUM 16 IN. HG. PSI/Hg	DATE 3-13-95
ISO NO./DWG P-PI-S-0085 #0	LINE NO./PART ID LDX 16B P-242-1"	BUBBLE SOLUTION LEAK TEC TYPE 277C	BSRI PROC. NO. LT. V.B REV. 4
CODE/WELD CLASS ASME/ANSI B31.3	GAGE M&TE NO. CDS 4634 DUE DATE: 8/28/95	PIPE DIA 1" / MATL TYPE C/S	TEMP: MATL 65°F
NUMBER OF WELDS TESTED 1	NUMBER OF LEAKS DETECTED: 0	TYPE VACUUM PUMP USED VARIAN	

PART OR WELD NUMBER	DISPOSITION ACC	DISPOSITION REJ	REMARKS
FW-112	✓		

SKETCH

NOTES:	EXAMINER	LEVEL	DATE
USED CONTACT THERMO. EBE 3-13-95	E.B. Edmunds	II	3-13-95
	INTERPRETER E.B. Edmunds	LEVEL II	DATE 3-13-95
	WITNESSED BY		DATE

MOS-NDE-024
Rev. 2 5/94 BSRI

MOS 003 FORM

WIP # 1280-LWM-2013-P-001 Page 151 of 166

PAGE 81 OF 96

Exhibit 1

SRS	NONDESTRUCTIVE EXAMINATION REPORT BUBBLE LEAK TESTING			REPORT NUMBER
IR NO. N/A				PROJECT NUMBER 178D
AREA 5 GATEWASH	WORK PACKAGE NO. 1780-LNM-2013-P001	TEST PRESSURE 21 PSIG		DATE 3/20/95
ISO NO./DWG P-PI-S-0033/0	LINE NO./PART ID FT-24	BUBBLE SOLUTION TYPE LEAK TEC 2770		BSRI PROC. NO. BT1 REV. 1
CODE/WELD CLASS ANSI/ASME B31.3	PRESSURIZING MEDIUM ARGON	PIPE DIA 6"	MATL TYPE S/S	TEMP: MATL 65°F
NUMBER OF WELDS TESTED: 1	NUMBER OF MECHANICAL JOINTS TESTED: 0	NUMBER OF LEAKS DETECTED: 0		GAGE M&TE NO. CP55 3173 DUE DATE: 9/20/95

PART OR WELD NUMBER	DISPOSITION ACC	DISPOSITION REJ	REMARKS
FW 1	X		

SKETCH:

NOTES: USED CONTACT THERM. CH 3/20/95	EXAMINER LEVEL II	DATE 3/20/95
	INTERPRETER LEVEL II	DATE 3/20/95
	WITNESSED BY/REVIEWED BY	DATE

MQS NDE-018-LT
Rev. 1 5/94 BSRI

PAGE 82 OF 96

Exhibit 1

SRS	NONDESTRUCTIVE EXAMINATION REPORT BUBBLE LEAK TESTING		REPORT NUMBER
IR NO. N/A			PROJECT NUMBER 1780
AREA S-LATEWASH	WORK PACKAGE NO. 1780-LWM-2013-P001	TEST PRESSURE 21 PSIG	DATE 5/10/95
ISO NO./DWG P-PI-S-0083/0	LINE NO./PART ID FT-24	BUBBLE SOLUTION TYPE LEAK TEC 277C	BSRI PROC. NO. BT-1 REV. 1
CODE/WELD CLASS 4HS1/ASME B31.3 S/C	PRESSURIZING MEDIUM ARGON	PIPE DIA 6" / MATL TYPE S/S	TEMP: MATL 75°F
NUMBER OF WELDS TESTED: 2	NUMBER OF MECHANICAL JOINTS TESTED: 0	NUMBER OF LEAKS DETECTED: 0	GAGE M&TE NO. CDS 4101 DUE DATE: 8/1/95

PART OR WELD NUMBER	DISPOSITION ACC	DISPOSITION REJ	REMARKS
FW 2	X		
FW 39	X		

SKETCH:

NOTES:	EXAMINER	LEVEL	DATE
THERM - CDS 2190 9/8/95	[illegible]	II	5/10/95
	INTERPRETER	LEVEL	DATE
	[illegible]	II	5/10/95
	WITNESSED BY/REVIEWED BY		DATE
	N/A		

PAGE 83 OF 96

MQS NDE-018-LT
Rev. 1 5/94 BSRI

Exhibit 1

SRS	**NONDESTRUCTIVE EXAMINATION REPORT BUBBLE LEAK TESTING**		REPORT NUMBER
IR NO. N/A			PROJECT NUMBER 1780
AREA LATE WASH	WORK PACKAGE NO. 1780 · LWM-2013-P-001	TEST PRESSURE 21 PSIG	DATE 02/27/95
ISO NO./DWG P PI-S-0089 R6	LINE NO./PART ID LINE# FT 27-3"	BUBBLE SOLUTION LEAK TEC TYPE 2776	BSRI PROC. NO. BT-1 R11
CODE/WELD CLASS ASME/ANSI B31.3 SEVERE CYCLIC	PRESSURIZING MEDIUM ARGON	PIPE DIA 3" / MATL TYPE S/S	TEMP: MATL 60°F
NUMBER OF WELDS TESTED: 2	NUMBER OF MECHANICAL JOINTS TESTED: N/A	NUMBER OF LEAKS DETECTED: 0	GAGE M&TE NO. CDS4101 DUE DATE: 3/20/95

PART OR WELD NUMBER	DISPOSITION ACC	DISPOSITION REJ	REMARKS
FW 4	✓		
FW 36 R1	✓		

SKETCH:

NOTES: CONTACT THERMOMETER USED DW 2/27/95	EXAMINER [signature]	LEVEL II	DATE 2/27/95
	INTERPRETER [signature]	LEVEL II	DATE 2/27/95
	WITNESSED BY/REVIEWED BY N/A		DATE N/A

MQS NDE-018-LT
Rev. 1 5/94 BSRI

Exhibit 1

SRS	**NONDESTRUCTIVE EXAMINATION REPORT BUBBLE LEAK TESTING**		REPORT NUMBER
IR NO. N/A			PROJECT NUMBER 1780
AREA S LATE WASH	WORK PACKAGE NO. 1780-LWM-2013-P001	TEST PRESSURE 21 PSIG	DATE 2/11/95
ISO NO./DWG P-PI-S-0085/0	LINE NO./PART ID SEE REMARKS	BUBBLE SOLUTION LEAKTEC TYPE 277C	BSRI PROC. NO. BT-1 REV. 1
CODE/WELD CLASS ANSI/ASME B31.3	PRESSURIZING MEDIUM ARGON	PIPE DIA 1/2 IN. / MATL TYPE S/S	TEMP: MATL 58°F
NUMBER OF WELDS TESTED: ~~8~~ 4 CH 2/11/95	NUMBER OF MECHANICAL JOINTS TESTED: 0	NUMBER OF LEAKS DETECTED: 0	GAGE M&TE NO. CDS 4101 DUE DATE: 3/20/95

PART OR WELD NUMBER	DISPOSITION ACC	DISPOSITION REJ	REMARKS
FW6	✓		FT 46
FW7	✓		FT 68
FW8	✓		FT69
FW9	✓		FT 70

SKETCH:

NOTES: DIG. THERM. CDS 2629 DUE 6/19/95	EXAMINER [signature] LEVEL II	DATE 2/11/95
	INTERPRETER [signature] LEVEL II	DATE 2/11/95
	WITNESSED BY/REVIEWED BY	DATE

MQS NDE-018-LT
Rev. 1 5/94 BSRI

WIPH 1780-LWM-2013-P001 1 OF 1 PAGE 85 OF 96

Exhibit 1

SRS	**NONDESTRUCTIVE EXAMINATION REPORT BUBBLE LEAK TESTING**		REPORT NUMBER
IR NO. N/A			PROJECT NUMBER 1780
AREA 5 LATE WASH	WORK PACKAGE NO. 1780-LWM-2013-P001	TEST PRESSURE 21 PSIG	DATE 2/11/95
ISO NO./DWG P.PI.5.0087/0	LINE NO./PART ID SEE REMARKS	BUBBLE SOLUTION TYPE LEAK TEC 277C	BSRI PROC. NO. BT-1 REV 1
CODE/WELD CLASS ANSI/ASME B31.3	PRESSURIZING MEDIUM ARGON	PIPE DIA 1/2 IN. / MATL TYPE S/S	TEMP: MATL 58 °F
NUMBER OF WELDS TESTED: 8	NUMBER OF MECHANICAL JOINTS TESTED: 0	NUMBER OF LEAKS DETECTED: 0	GAGE M&TE NO. CPS 4101 DUE DATE: 3/20/95

PART OR WELD NUMBER	DISPOSITION ACC	DISPOSITION REJ	REMARKS
FW10	✓		FT49
FW11	✓		FT48
FW12	✓		FT39
FW13	✓		FT45
FW32	✓		FT49
FW33	✓		FT48
FW34	✓		FT39
FW35	✓		FT45

SKETCH:

NOTES: PIG/THERM- COS2629 DUE 6/19/95 CA 2/11/95	EXAMINER LEVEL II	DATE 2/11/95
	INTERPRETER LEVEL II	DATE 2/11/95
	WITNESSED BY/REVIEWED BY	DATE

PAGE 86 OF 96

MQS NDE-018-LT
Rev. 1 5/94 BSRI

Exhibit 1

NONDESTRUCTIVE EXAMINATION REPORT
BUBBLE LEAK TESTING

SRS			REPORT NUMBER
IR NO. N/A			PROJECT NUMBER 1780
AREA 5 LATE WASH	WORK PACKAGE NO. 1780-LWAA-Z013-P-001	TEST PRESSURE 21 PSIG	DATE 2/22/95
ISO NO./DWG P-PI-5-0087	LINE NO./PART ID SEE REMARKS	BUBBLE SOLUTION TYPE LEAK TEC 277C	BSRI PROC. NO. BT-1 REV. 1
CODE/WELD CLASS ANSI/ASME B31.3	PRESSURIZING MEDIUM ARGON	PIPE DIA 1/2" / MATL TYPE S/S	TEMP: MATL 45°F
NUMBER OF WELDS TESTED: 4	NUMBER OF MECHANICAL JOINTS TESTED: 0	NUMBER OF LEAKS DETECTED: 0	GAGE M&TE NO. CDS 4101 DUE DATE: 3-20-95

PART OR WELD NUMBER	DISPOSITION ACC	DISPOSITION REJ	REMARKS
FW-14	✓		
FW-15	✓		
FW-16	✓		
FW-17	✓		

SKETCH:

NOTES:	EXAMINER	LEVEL	DATE
DIG THERMO CDS 2629 6-19-95 EBE 2/22/95	E B Edmunds	II	2-22-95
	INTERPRETER E B Edmunds	LEVEL II	DATE 2-22-95
	WITNESSED BY/REVIEWED BY		DATE

MQS NDE-018-LT
Rev. 1 5/94 BSRI

PAGE 87 OF 96

Exhibit 1

NONDESTRUCTIVE EXAMINATION REPORT BUBBLE LEAK TESTING

SRS			REPORT NUMBER
IR NO. N/A			PROJECT NUMBER 1780
AREA S-LATEWASH	WORK PACKAGE NO. 1780-LWM-Z013P001	TEST PRESSURE 21 PSIG	DATE 2/17/95
ISO NO./DWG P-PI-S-0088 REV 0	LINE NO./PART ID FT-74, FT-75, FT-76, FT73	BUBBLE SOLUTION TYPE LEAKTEC 2770	BSRI PROC. NO. BT-1 REV. 1
CODE/WELD CLASS ASME/ANSI B31.3	PRESSURIZING MEDIUM ARGON	PIPE DIA 1/2 IN. / MATL TYPE SS	TEMP: MATL 54° F
NUMBER OF WELDS TESTED: 4	NUMBER OF MECHANICAL JOINTS TESTED: 0	NUMBER OF LEAKS DETECTED:	GAGE M&TE NO. CDS 4101 DUE DATE: 3/20/95

PART OR WELD NUMBER	DISPOSITION ACC	DISPOSITION REJ	REMARKS
FW 23			FT-76
FW 24			FT-75
FW 25			FT-73
FW 26			FT-74

SKETCH

NOTES: THERM. CDS 2980 - DUE 3/23/95	EXAMINER [signature] LEVEL II	DATE 2/17/95
	INTERPRETER [signature] LEVEL II	DATE 2/17/95
	WITNESSED BY/REVIEWED BY N/A	DATE

MQS NDE-018-LT
Rev. 1 5/94 BSRI

Exhibit 1

SRS	**NONDESTRUCTIVE EXAMINATION REPORT BUBBLE LEAK TESTING**		REPORT NUMBER
IR NO. N/A			PROJECT NUMBER 1780
AREA 5 LATE WASH	WORK PACKAGE NO. 1780-LWM-2013-P001	TEST PRESSURE 21 PSIG	DATE 2/11/95
ISO NO./DWG P-PI-5-0088/0	LINE NO./PART ID SEE REMARKS	BUBBLE SOLUTION TYPE LEAKTEC 277C	BSRI PROC. NO. BT-1 REV-1
CODE/WELD CLASS ANSI/ASME B31.3	PRESSURIZING MEDIUM ARGON	PIPE DIA 1/2 IN. / MATL TYPE S/S	TEMP: MATL 58°F
NUMBER OF WELDS TESTED: 8	NUMBER OF MECHANICAL JOINTS TESTED: 0	NUMBER OF LEAKS DETECTED: 0	GAGE M&TE NO. CDS4101 DUE DATE: 3/20/95

PART OR WELD NUMBER	DISPOSITION ACC	DISPOSITION REJ	REMARKS
FW19	✓		FT76
FW20	✓		FT76
FW21	✓		FT75
FW22	✓		FT75
FW28	✓		FT73
FW29	✓		FT73
FW30	✓		FT74
FW31	✓		FT74

SKETCH:

NOTES: DIG. THERM CDS 2629 DUE 6/19/95 CA 2/11/95	EXAMINER [signature]	LEVEL II	DATE 2/11/95
	INTERPRETER [signature]	LEVEL II	DATE 2/11/95
	WITNESSED BY/REVIEWED BY N/A		DATE

MQS NDE-018-LT
Rev. 1 5/94 BSRI

File ID CMP 03-6.10-3
Page 1 Of 1

Leak Test Data Sheet

WP Page ____ of ____

1. CMP03-6.10, Rev. 2 Pcn 3	2. Work Package No. L2015
3. Design Class B	4. Prepared by Jim Paliwkhock

5. Scope of Work/Item to be Tested:

P.PI.S.0083 Rev B
HLPO 11.12

6. Type of Test/Pressure: Hydro ✓ Pneumatic ____ Other ____

7. Test Medium: Water ✓ Other ____

8. Test Pressure Tolerance: -0+10% Actual Test Pressure: 200 Test Temperature: 62

9. Test Duration: 10 Min. ✓ 30 Min. ____ Other ____

10. M&TE Equipment No: 2923 Calibration Due Date 3/22/95

11. Prehydro Walkdown Complete/Accepted and Ready for Test: [signature] 1/17/95

12.

Remarks/Specific Records	Requirements/References	Criteria/Supplementary
	P.PI.S-0083 Rev B	

13. Acceptable No Leakage ✓ Acceptable Allowable Leakage ____

13a. Verify restoration of test boundary and lay up requirements are complete.
CDE (signature) [signature] Date 1/17/95

14. Examinations completed for all required attributes
CDE (signature) [signature] Date 1/17/95

15. Inspections completed for all required attributes
CDE (signature) [signature] Date 2/16/95

WP #L2015 page 6 of 79

File ID CMP 03-6.10-3
Page 1 Of 1

Leak Test Data Sheet

WP Page ____ of ____

1. CMP 03-6.10, Rev. 2PC03	2. Work Package No. C2015
3. Design Class PS	4. Prepared by Jim Palushock

5. Scope of Work/Item to be Tested:

P.P1.5.0083 Rev B

CORE. 19.20

6. Type of Test/Pressure: Hydro ✓ Pneumatic ____ Other ____

7. Test Medium: Water ✓ Other ____

8. Test Pressure Tolerance: -0 +10% Actual Test Pressure: 210 Test Temperature: 62

9. Test Duration: 10 Min. ✓ 30 Min. ____ Other ____

10. M&TE Equipment No: 2923 Calibration Due Date 3/22/95

11. Prehydro Walkdown Complete/Accepted and Ready for Test: [signature] 1/11/95

12.

Remarks/Specific Records	Requirements/References	Criteria/Supplementary
	P.P1.5.0083 Rev B	

13. Acceptable No Leakage ✓ Acceptable Allowable Leakage ____

13a. Verify restoration of test boundary and lay up requirements are complete.

CDE (signature) [signature] Date 1/11/95

14. Examinations completed for all required attributes

CDE (signature) [signature] Date 1/11/95

15. Inspections completed for all required attributes

CDE (signature) [signature] Date 2/16/95

W/P # C2015 page 7 of 79

File ID CMP 03-6.10-3
Page 1 Of 1

Leak Test Data Sheet

WP Page ____ of ____

1. CMP 03-6.10, Rev. 2PCN3	2. Work Package No. C2015
3. Design Class PS	4. Prepared by Jim Palushock

5. Scope of Work/Item to be Tested: P.P1.S-0083 RevB
WELDS 1,2,3

6. Type of Test/Pressure: Hydro ✓ Pneumatic ____ Other ____

7. Test Medium: Water ✓ Other ____

8. Test Pressure Tolerance: -0+10% Actual Test Pressure: 200 Test Temperature: 60

9. Test Duration: 10 Min. ✓ 30 Min. ____ Other ____

10. M&TE Equipment No: 2923 Calibration Due Date 3/22/95

11. Prehydro Walkdown Complete/Accepted and Ready for Test: [signature]

12.

Remarks/Specific Records	Requirements/References	Criteria/Supplementary
P.P1.S-0083 RevB		

13. Acceptable No Leakage ✓ Acceptable Allowable Leakage ____

13a. Verify restoration of test boundary and lay up requirements are complete.
CDE (signature) [signature] Date 2/15/95

14. Examinations completed for all required attributes
CDE (signature) [signature] Date 2/15/95

15. Inspections completed for all required attributes
CDE (signature) [signature] Date 2/16/95

W/P # C0015 Page 8 of 79

File ID CMP 03-6.10-3
Page 1 Of 1

Leak Test Data Sheet

WP Page ____ of ____

1. CMP03-6.10, Rev. 2 Rev 3	2. Work Package No. C2015
3. Design Class Ps	4. Prepared by Jim Palustock

5. Scope of Work/Item to be Tested:
PP1.5.0083 Rev B
CORE 5,6

6. Type of Test/Pressure: Hydro ✓ Pneumatic ____ Other ____

7. Test Medium: Water ✓ Other ____

8. Test Pressure Tolerance: -0 to 2% Actual Test Pressure: 210 Test Temperature: 60

9. Test Duration: 10 Min. ✓ 30 Min. ____ Other ____

10. M&TE Equipment No: 2923 Calibration Due Date 3/22/05

11. Prehydro Walkdown Complete/Accepted and Ready for Test: [signature]

12.

Remarks/Specific Records	Requirements/References	Criteria/Supplementary
	PP1.5.0083	

13. Acceptable No Leakage ✓	Acceptable Allowable Leakage ____

13a. Verify restoration of test boundary and lay up requirements are complete.
CDE (signature) [signature] Date 1/11/05

14. Examinations completed for all required attributes
CDE (signature) [signature] Date 1/11/05

15. Inspections completed for all required attributes
CDE (signature) [signature] Date 2/11/05

WP# C2015 page 9 of 9

File ID CMP 03-6.10-3
Page 1 Of 1

Leak Test Data Sheet

WP Page ____ of ____

1. CMP 03-6.10, Rev. 2PW3	2. Work Package No. L2015
3. Design Class PS	4. Prepared by Jim Palenkak

5. Scope of Work/Item to be Tested:

PP1.5.0083 Rev B
JAUCET WELDS 23, 4, 7, 8, 9, 10, 13, 14, 15, 16
17, 18, 21

6. Type of Test/Pressure: Hydro ✓ Pneumatic ____ Other ____

7. Test Medium: Water ✓ Other ____

8. Test Pressure Tolerance: -0+20% Actual Test Pressure: 11 Test Temperature: 60

9. Test Duration: 10 Min. ✓ 30 Min. ____ Other ____

10. M&TE Equipment No: 0582 Calibration Due Date 3/21/95

11. Prehydro Walkdown Complete/Accepted and Ready for Test: [signature] 2/15/95

12.

Remarks/Specific Records	Requirements/References	Criteria/Supplementary
	PP1.5.0083 Rev B	

13. Acceptable No Leakage ✓ Acceptable Allowable Leakage ____

13a. Verify restoration of test boundary and lay up requirements are complete.

CDE (signature) [signature] Date 2/15/95

14. Examinations completed for all required attributes

CDE (signature) [signature] Date 2/15/95

15. Inspections completed for all required attributes

CDE (signature) [signature] Date 2/16/95

W/P #L2015 Page 10 of 79

File ID CMP 03-6.10-3
Page 1 Of 1

Leak Test Data Sheet

WP Page ____ of ____

1. CMP 03-6.10, Rev. 2 Pw3	2. Work Package No. L 2015
3. Design Class PS	4. Prepared by LARRY MARTIN

5. Scope of Work/Item to be Tested: P-P1-S-0084 R/B
LM 1-18-95
M-PS1-S-0084001 R/1
W 14, 15, 16, 17, 7, 8, 4, 37, 39, 40

6. Type of Test/Pressure: Hydro X Pneumatic ____ Other ____

7. Test Medium: Water X Other ____

8. Test Pressure Tolerance: -0 +10% Actual Test Pressure: 11 Test Temperature: 64

9. Test Duration: 10 Min. X 30 Min. ____ Other ____

10. M&TE Equipment No: CDS 082 Calibration Due Date 3-21-95

11. Prehydro Walkdown Complete/Accepted and Ready for Test: Larry Martin

12.

Remarks/Specific Records	Requirements/References	Criteria/Supplementary
P-P1-S-0084 R/B		

13. Acceptable No Leakage X Acceptable Allowable Leakage ____

13a. Verify restoration of test boundary and lay up requirements are complete.

CDE (signature) Larry Martin Date 1-18-95

14. Examinations completed for all required attributes

CDE (signature) Larry Martin Date 1-18-95

15. Inspections completed for all required attributes

CDE (signature) Larry Martin Date 2-8-95

WIP #L2015 page 13 of 79

Leak Test Data Sheet

WP Page ____ of ____

1. CMP 03-6.10, Rev. 2Rev 3	2. Work Package No. L 2015
3. Design Class PS	4. Prepared by LARRY MARTIN

5. Scope of Work/Item to be Tested: P.P1.S.0084 MB CORE
M-PS1-S-00001 R/1
W ~~18,19,20~~ 5,6,13
LM 1-5-95

6. Type of Test/Pressure: Hydro X Pneumatic ____ Other ____

7. Test Medium: Water X Other ____

8. Test Pressure Tolerance: -0 +10% Actual Test Pressure: 200 Test Temperature: 62

9. Test Duration: 10 Min. X 30 Min. ____ Other ____

10. M&TE Equipment No: CDS 2923 Calibration Due Date 3-22-95

11. Prehydro Walkdown Complete/Accepted and Ready for Test: Larry Martin

12.

Remarks/Specific Records	Requirements/References	Criteria/Supplementary
P.P1.S.0084 R/B		

13. Acceptable No Leakage X	Acceptable Allowable Leakage ____

13a. Verify restoration of test boundary and lay up requirements are complete.
CDE (signature) Larry Martin Date 1-5-95

14. Examinations completed for all required attributes
CDE (signature) Larry Martin Date 1-5-95

15. Inspections completed for all required attributes
CDE (signature) Larry Martin Date 2-8-95

WP# L2015 page 14 of 79

File ID CMP 03-6.10-3
Page 1 Of 1

Leak Test Data Sheet

WP Page ____ of ____

1. CMP 03-6.10, Rev. 2PLN3	2. Work Package No. L2015
3. Design Class PS	4. Prepared by Jim Palushock

5. Scope of Work/Item to be Tested:
PDI-S-0084
CORE .18.19.20

6. Type of Test/Pressure: Hydro ✓ Pneumatic ____ Other ____

7. Test Medium: Water ✓ Other ____

8. Test Pressure Tolerance: -0 +10% Actual Test Pressure: 2000 Test Temperature: 60

9. Test Duration: 10 Min. ✓ 30 Min. ____ Other ____

10. M&TE Equipment No: 2923 Calibration Due Date 3/22/05

11. Prehydro Walkdown Complete/Accepted and Ready for Test: ____

12.

Remarks/Specific Records	Requirements/References	Criteria/Supplementary
	PDI-S-0084 Rev B	

13. Acceptable No Leakage ✓ Acceptable Allowable Leakage ____

13a. Verify restoration of test boundary and lay up requirements are complete.
CDE (signature) [signature] Date 12/29/04

14. Examinations completed for all required attributes
CDE (signature) [signature] Date 12/29/04

15. Inspections completed for all required attributes
CDE (signature) [signature] Date 2/8/05

WIP #L2015 Page 15 of 79

File ID CMP 03-6.10-3
Page 1 Of 1

Leak Test Data Sheet

WP Page ____ of ____

1. CMP03-6.10, Rev. 2 Rev 3	2. Work Package No. L2015
3. Design Class Ps	4. Prepared by Jim Palushock

5. Scope of Work/Item to be Tested:
Hydro P P1.S.0084 RoB
CORE 1.2, 38, 3

6. Type of Test/Pressure: Hydro ✓ Pneumatic ____ Other ____

7. Test Medium: Water ✓ Other ____

8. Test Pressure Tolerance: -0 +0.90 Actual Test Pressure: 200 Test Temperature: ____

9. Test Duration: 10 Min. ✓ 30 Min. ____ Other ____

10. M&TE Equipment No: 2923 Calibration Due Date 3/22/95

11. Prehydro Walkdown Complete/Accepted and Ready for Test: [signature]

12.

Remarks/Specific Records	Requirements/References	Criteria/Supplementary
	P.P1.S.0084-RoB	

13. Acceptable No Leakage ✓ Acceptable Allowable Leakage ____

13a. Verify restoration of test boundary and lay up requirements are complete.
CDE (signature) [signature] Date 1/19/95

14. Examinations completed for all required attributes
CDE (signature) [signature] Date 1/19/95

15. Inspections completed for all required attributes
CDE (signature) [signature] Date [illegible]

W/P # L2015 page 16 of 29

File ID CMP 03-6.10-3
Page 1 Of 1

Leak Test Data Sheet

WP Page ____ of ____

1. CMP 03-6.10, Rev. 2 Rev 3	2. Work Package No. C2015
3. Design Class Ps	4. Prepared by [signature]

5. Scope of Work/Item to be Tested:
P.PI.S.0084 Rev B
JACKET. 29.30.31.36

6. Type of Test/Pressure: Hydro ✓ Pneumatic ____ Other ____

7. Test Medium: Water ✓ Other ____

8. Test Pressure Tolerance: -0 +10% Actual Test Pressure: 11 Test Temperature: 60

9. Test Duration: 10 Min. ✓ 30 Min. ____ Other ____

10. M&TE Equipment No: 4110 Calibration Due Date 2/11/95

11. Prehydro Walkdown Complete/Accepted and Ready for Test: [signature]

12.

Remarks/Specific Records	Requirements/References	Criteria/Supplementary
	P.PI.S.0084 Rev B	

13. Acceptable No Leakage ✓ Acceptable Allowable Leakage ____

13a. Verify restoration of test boundary and lay up requirements are complete.
CDE (signature) [signature] Date 1/10/95

14. Examinations completed for all required attributes
CDE (signature) [signature] Date 1/12/95

15. Inspections completed for all required attributes
CDE (signature) [signature] Date 2/8/95

WP # C2015 Page 17 of 79

File ID CMP 03-6.10-3
Page 1 Of 1

Leak Test Data Sheet

WP Page ____ of ____

1. CMP03-6.10, Rev. 2PCN3	2. Work Package No. L2015
3. Design Class PS	4. Prepared by Jim Palinshock

5. Scope of Work/Item to be Tested:

HYDRO PP1-S-0084 Rev B
CORE WELDS
27, 28, 32, 33, 21, 22, 23, 35, 24, 25, 26

6. Type of Test/Pressure: Hydro ✓ Pneumatic ____ Other ____

7. Test Medium: Water ✓ Other ____

8. Test Pressure Tolerance: -0 +10% Actual Test Pressure: 200 Test Temperature: 60

9. Test Duration: 10 Min. ✓ 30 Min. ____ Other ____

10. M&TE Equipment No: 2923 Calibration Due Date 3/22/95

11. Prehydro Walkdown Complete/Accepted and Ready for Test: ____

12.

Remarks/Specific Records	Requirements/References	Criteria/Supplementary
	PP1S0084 Rev B	

13. Acceptable No Leakage ✓ Acceptable Allowable Leakage ____

13a. Verify restoration of test boundary and lay up requirements are complete.

CDE (signature) [signature] Date 1/6/95

14. Examinations completed for all required attributes

CDE (signature) [signature] Date 1/6/95

15. Inspections completed for all required attributes

CDE (signature) [signature] Date 2/8/95

W/P # L2015 page 18 of 79

File ID CMP 03-6.10-3
Page 1 Of 1

Leak Test Data Sheet

WP Page ____ of ____

1. CMP 03-6.10, Rev. 2 Pen 3	2. Work Package No. L2015
3. Design Class PS	4. Prepared by Jim Palushock

5. Scope of Work/Item to be Tested:

HYDRO CORE P.P1-S-0084 Rev B
WELDS 9, 10, 11, 12, 34

6. Type of Test/Pressure: Hydro ✓ Pneumatic ____ Other ____

7. Test Medium: Water ✓ Other ____

8. Test Pressure Tolerance: -0 +10% Actual Test Pressure: 200 Test Temperature: 60

9. Test Duration: 10 Min. ✓ 30 Min. ____ Other ____

10. M&TE Equipment No: 2923 Calibration Due Date 3/22/95

11. Prehydro Walkdown Complete/Accepted and Ready for Test: [signature] 1/3/95

12.

Remarks/Specific Records	Requirements/References	Criteria/Supplementary
P.P1-S-0084 Rev B		

13. Acceptable No Leakage ✓ Acceptable Allowable Leakage ____

13a. Verify restoration of test boundary and lay up requirements are complete.

CDE (signature) [signature] Date 1/3/95

14. Examinations completed for all required attributes

CDE (signature) [signature] Date 1/3/95

15. Inspections completed for all required attributes

CDE (signature) [signature] Date 2/8/95

WP # L2015 page 19 of 79

Exhibit 1

SRS N/A	**NONDESTRUCTIVE EXAMINATION REPORT BUBBLE LEAK TESTING**		REPORT NUMBER N/A
IR NO. N/A			PROJECT NUMBER 1780
AREA S	WORK PACKAGE NO. L2015	TEST PRESSURE 21 PSIG	DATE 18 OWD 1-19-95 ~~1-20-95~~
ISO NO./DWG P-PI-S-0084 R/B	LINE NO./PART ID FT27	BUBBLE SOLUTION TYPE LEAK TEC 277 C	BSRI PROC. NO. BT-1R/1
CODE/WELD CLASS B31.3	PRESSURIZING MEDIUM AIR	PIPE DIA 3" / MATL TYPE S/S	TEMP: MATL 64°F
NUMBER OF WELDS TESTED: 4	NUMBER OF MECHANICAL JOINTS TESTED: 0	NUMBER OF LEAKS DETECTED: 0	GAGE M&TE NO. 082 DUE DATE: 3-21-95

PART OR WELD NUMBER	DISPOSITION ACC	DISPOSITION REJ	REMARKS
W1	✓	N/A	N/A
W2	✓	N/A	N/A
W3	✓	N/A	N/A
W38	✓	N/A	N/A

SKETCH

N/A

NOTES: DIGITAL THERMOMETER CDS NO. 2750 CAL DUE DATE 04-07-95. TESTED PER DCF NO M-DCF-S-00443 OWD 1-19-95	EXAMINER O.W. Smith	LEVEL II	DATE 1-19-95
	INTERPRETER O.W. Smith	LEVEL II	DATE 1-19-95
	WITNESSED BY/REVIEWED BY N/A		DATE N/A

WIP: #L2015 page 50 of 29

PAGE 26 OF 31

MOS NDE-018-LT
Rev. 1 5/94 BSRI

Exhibit 1

SRS	**NONDESTRUCTIVE EXAMINATION REPORT BUBBLE LEAK TESTING**		REPORT NUMBER N/A
IR NO. N/A			PROJECT NUMBER 1780
AREA S	WORK PACKAGE NO. L2015	TEST PRESSURE 22 PSIG	DATE 1-5-95 ~~BT-1 R11~~ 1-5-95
ISO NO./DWG P-PI-S-0054 R/0	LINE NO./PART ID FT 27	BUBBLE SOLUTION TYPE LEAK TEC 277 C	BSRI PROC. NO. BT-1 R/1
CODE/WELD CLASS B 31.3	PRESSURIZING MEDIUM PLANT AIR	PIPE DIA 3" / MATL TYPE S/S	TEMP: MATL 55°F
NUMBER OF WELDS TESTED: 3	NUMBER OF MECHANICAL JOINTS TESTED: 0	NUMBER OF LEAKS DETECTED: 0	GAGE M&TE NO. 4105 DUE DATE: 02-04-95

PART OR WELD NUMBER	DISPOSITION ACC	DISPOSITION REJ	REMARKS
W5	✓	N/A	N/A
W6	✓	N/A	N/A
W13	✓	N/A	N/A

SKETCH:

NOTES: PRITAL THERMOMETER CDS NO 2750 CAL DUE DATE 04-07-95. TESTED PER DCF NO M-DCF-S-00443 O.W.A 1-5-95	EXAMINER O.W. Smith	LEVEL II	DATE 1-5-95
	INTERPRETER O.W. Smith	LEVEL II	DATE 1-5-95
	WITNESSED BY/REVIEWED BY N/A		DATE N/A

WP #L2015 page 51 of 79

PAGE 27 OF 31

Exhibit 1

SRS	**NONDESTRUCTIVE EXAMINATION REPORT BUBBLE LEAK TESTING**		REPORT NUMBER N/A
IR NO. N/A			PROJECT NUMBER 1780
AREA S	WORK PACKAGE NO. L2015	TEST PRESSURE 21 PSIG	DATE 1-3-95
ISO NO./DWG P-PI-S-0084 R/0	LINE NO./PART ID FT 27	BUBBLE SOLUTION TYPE	BSRI PROC. NO. BT-1 R/1
CODE/WELD CLASS B31.3	PRESSURIZING MEDIUM PLANT AIR	PIPE DIA 3" / MATL TYPE S/S	TEMP: MATL 53°F
NUMBER OF WELDS TESTED: 5	NUMBER OF MECHANICAL JOINTS TESTED: 0	NUMBER OF LEAKS DETECTED: 0	GAGE M&TE NO. 4105 DUE DATE: 02-04-95

PART OR WELD NUMBER	DISPOSITION ACC	DISPOSITION REJ	REMARKS
W 9	✓	N/A	N/A
W10	✓	N/A	N/A
W11	✓	N/A	N/A
W12	✓	N/A	N/A
W34	✓	N/A	N/A

SKETCH:

NOTES: DIGITAL THERMOMETER CDS NO. 2750 CAL DUE DATE 04-07-95 OW 1-03-95	EXAMINER O.W. Smith	LEVEL II	DATE 1-03-95
	INTERPRETER O.W. Smith	LEVEL II	DATE 1-03-95
	WITNESSED BY/REVIEWED BY		DATE

WIP # 2015 page 52 of 79

PAGE 28 OF 31

Exhibit 1

SRS	NONDESTRUCTIVE EXAMINATION REPORT BUBBLE LEAK TESTING			REPORT NUMBER N/A
IR NO. N/A				PROJECT NUMBER 1780
AREA S	WORK PACKAGE NO. SD. L2015	TEST PRESSURE 21 PSIG		DATE 12/29/94
ISO NO./DWG P-PI-S-0084 R/D	LINE NO./PART ID LIVE # FT27-3"	BUBBLE SOLUTION LEAK TEC TYPE 277C		BSRI PROC. NO. BT-1 R/1
CODE/WELD CLASS ASME/AUSI B31.3 SEVERE CYCLIC	PRESSURIZING MEDIUM PLANT AIR	PIPE DIA 3"	MATL TYPE S/S	TEMP: MATL 63°F
NUMBER OF WELDS TESTED: 3	NUMBER OF MECHANICAL JOINTS TESTED: 0	NUMBER OF LEAKS DETECTED: 0		GAGE M&TE NO. CDS 4105 DUE DATE:

PART OR WELD NUMBER	DISPOSITION ACC	DISPOSITION REJ	REMARKS
W18, 19, 20	✓		

SKETCH:

NOTES: DIGITAL THERMOMETER CDS 2750 DUE 4/7/95 TEST PER DCF#	EXAMINER Scott M. Valet	LEVEL II	DATE 12/29/94
	INTERPRETER Scott M. Valet	LEVEL II	DATE 12/29/94
	WITNESSED BY/REVIEWED BY N/A		DATE N/A

W/P #L2015 page 5 of 79

PAGE 29 OF 31

MQS NDE-018-LT
Rev. 1 5/94 BSRI

Exhibit 1

SRS	**NONDESTRUCTIVE EXAMINATION REPORT BUBBLE LEAK TESTING**		REPORT NUMBER N/A
IR NO. N/A			PROJECT NUMBER 1780
AREA S	WORK PACKAGE NO. L2015	TEST PRESSURE 21 PSIG	DATE 1-6-95
ISO NO./DWG P-PI-S-0084 R/0	LINE NO./PART ID FT 27	BUBBLE SOLUTION TYPE LEAK TEC 277C	BSRI PROC. NO. BT-1 R11
CODE/WELD CLASS B31.3	PRESSURIZING MEDIUM PLANT AIR	PIPE DIA 3" / MATL TYPE S/S	TEMP: MATL 49°F
NUMBER OF WELDS TESTED: 10	NUMBER OF MECHANICAL JOINTS TESTED: 0	NUMBER OF LEAKS DETECTED: 0	GAGE M&TE NO. 4105 DUE DATE: 2-04-95

PART OR WELD NUMBER	DISPOSITION ACC	DISPOSITION REJ	REMARKS
W21	✓	N/A	N/A
W22	✓	N/A	N/A
W23	✓	N/A	N/A
W24	✓	N/A	N/A
W25	✓	N/A	N/A
W26	✓	N/A	N/A
W27	✓	N/A	N/A
W28	✓	N/A	N/A
W32	✓	N/A	N/A
W33	✓	N/A	N/A

SKETCH:

N/A

NOTES: DIGITAL TACHOMETER CDS NO 2750 CAL DUE DATE 4-07-95 TESTED PER DCF NO M-DCF-S-00443 OWA 1-6-95	EXAMINER O.W. Smith	LEVEL II	DATE 1-6-95
	INTERPRETER O.W. Smith	LEVEL II	DATE 1-6-95
	WITNESSED BY/REVIEWED BY N/A		DATE N/A

WIP #L2015 page 54 of 79

PAGE 30 OF 31

Exhibit 1

SRS N/A	NONDESTRUCTIVE EXAMINATION REPORT BUBBLE LEAK TESTING		REPORT NUMBER N/A
IR NO. N/A			PROJECT NUMBER 1780
AREA S	WORK PACKAGE NO. L2015	TEST PRESSURE 22 PSIG	DATE 2-15-95
ISO NO./DWG P-PI-S-0083 R/B	LINE NO./PART ID IT 27	BUBBLE SOLUTION LEAK TEC. TYPE 2770	BSRI PROC. NO. BT-1 R/1
CODE/WELD CLASS B31.3	PRESSURIZING MEDIUM AIR	PIPE DIA 6" / MATL TYPE S/S	TEMP: MATL 62°F
NUMBER OF WELDS TESTED: 3	NUMBER OF MECHANICAL JOINTS TESTED: 0	NUMBER OF LEAKS DETECTED: 0	GAGE M&TE NO. 082 DUE DATE: 3-21-95

PART OR WELD NUMBER	DISPOSITION ACC	DISPOSITION REJ	REMARKS
W1	✓	N/A	N/A
W2	✓	N/A	N/A
W3	✓	N/A	N/A

NOTES: DIGITAL THERMOMETER CDI NO 2750 CAL DUE DATE 04-07-95 OWL 2-15-95	EXAMINER O.W. Sutton	LEVEL II	DATE 2-15-95
	INTERPRETER O.W. Sutton	LEVEL II	DATE 2-15-95
	WITNESSED BY/REVIEWED BY N/A		DATE N/A

WP #L2015 page 7 of 79

PAGE 16 OF 20

MQS NDE-018-LT
Rev. 1 5/94 BSRI

Exhibit 1

SRS	NONDESTRUCTIVE EXAMINATION REPORT BUBBLE LEAK TESTING			REPORT NUMBER
IR NO. N/A				PROJECT NUMBER 1780
AREA C/S	WORK PACKAGE NO. L2015	TEST PRESSURE 21 PSIG		DATE 1/11/95
ISO NO./DWG M-M6-S-0019 R/1	LINE NO./PART ID R-P-I-S-0083/B	BUBBLE SOLUTION TYPE LEAK TEC 277C		BSRI PROC. NO. BT-1 R/1
CODE/WELD CLASS B31-3 (P224) S/C	PRESSURIZING MEDIUM AIR	PIPE DIA 6"	MATL TYPE SS	TEMP: MATL 60°F
NUMBER OF WELDS TESTED: 2	NUMBER OF MECHANICAL JOINTS TESTED: 0	NUMBER OF LEAKS DETECTED: 0		GAGE M&TE NO. CDS 4105 DUE DATE: 2/4/95

PART OR WELD NUMBER	DISPOSITION ACC	DISPOSITION REJ	REMARKS
W5	✓		
W6	✓		

SKETCH:

NOTES:	EXAMINER [signature] LEVEL II	DATE 1/11/95
	INTERPRETER [signature] LEVEL II	DATE 1/11/95
	WITNESSED BY/REVIEWED BY N/A	DATE

W/P #L2015 page 72 of 79

PAGE 17 OF 20

Exhibit 1

SRS N/A	**NONDESTRUCTIVE EXAMINATION REPORT BUBBLE LEAK TESTING**		REPORT NUMBER N/A
IR NO. N/A			PROJECT NUMBER 1780
AREA S	WORK PACKAGE NO. L 2015	TEST PRESSURE 21 PSIG	DATE 1-17-95
ISO NO./DWG P-PI-S-0083 R/B	LINE NO./PART ID FT24	BUBBLE SOLUTION TYPE LEAK TEC 277 C	BSRI PROC. NO. BT-1 R/1
CODE/WELD CLASS B31.3	PRESSURIZING MEDIUM PLANT AIR	PIPE DIA 6" / MATL TYPE S/S	TEMP: MATL 67°F
NUMBER OF WELDS TESTED: 2	NUMBER OF MECHANICAL JOINTS TESTED: 0	NUMBER OF LEAKS DETECTED: 0	GAGE M&TE NO. 082 DUE DATE: 3-21-95

PART OR WELD NUMBER	DISPOSITION ACC	DISPOSITION REJ	REMARKS
W11	✓	N/A	N/A
W12	✓	N/A	N/A

SKETCH:

N/A

NOTES: DIGITAL THICKNESS METER CDS NO. 2750 CAL DUE DATE 04-07-95 OWS 1-17-95	EXAMINER O.W. Smithers	LEVEL II	DATE 1-17-95
	INTERPRETER O.W. Smithers	LEVEL II	DATE 1-17-95
	WITNESSED BY/REVIEWED BY		DATE

WIP #L2015 page 7300 29

PAGE 18 OF 20

MQS NDE-018-LT
Rev. 1 5/94 BSRI

Exhibit 1

SRS	**NONDESTRUCTIVE EXAMINATION REPORT BUBBLE LEAK TESTING**		REPORT NUMBER
IR NO. N/A			PROJECT NUMBER 1780
AREA C/S	WORK PACKAGE NO. L2015	TEST PRESSURE 21 PSIG	DATE 1/11/95
ISO NO./DWG M-MG-S-0019 R/1	LINE NO./PART ID R.P.I.-S-0083/B	BUBBLE SOLUTION TYPE LEAK TEC 2770	BSRI PROC. NO. BT-1 R/1
CODE/WELD CLASS B31.3 (P224) S/C	PRESSURIZING MEDIUM AIR	PIPE DIA 6" / MATL TYPE S/S	TEMP: MATL 60°F
NUMBER OF WELDS TESTED: 2	NUMBER OF MECHANICAL JOINTS TESTED: 0	NUMBER OF LEAKS DETECTED: 0	GAGE M&TE NO. CPS 4105 DUE DATE: 2/4/95

PART OR WELD NUMBER	DISPOSITION ACC	DISPOSITION REJ	REMARKS
W19 (R1)	X		
W20	X		

SKETCH:

NOTES:	EXAMINER	LEVEL II	DATE 1/11/95
	INTERPRETER	LEVEL II	DATE 1/11/95
	WITNESSED BY/REVIEWED BY N/A		DATE

W/P # L2015 Page 74 of 79

PAGE 19 OF 20

MQS NDE-018-LT
Rev. 1 5/94 BSRI

File ID CMP 03-6.10-3
Page 1 Of 1

Leak Test Data Sheet

WP Page ____ of ____

1. CMP 03-6.10, Rev. 2	2. Work Package No. FT-01
3. Design Class P.S.	4. Prepared by Zolly Tucker

5. Scope of Work/Item to be Tested: FT System in the Back Pulse Area
See attached markup P&ID.

6. Type of Test/Pressure: Hydro ✓ Pneumatic ____ Other ____

7. Test Medium: Water ✓ Other ____

8. Test Pressure Tolerance: 190 ± 10% Actual Test Pressure: 205 Test Temperature: 63°F

9. Test Duration: 10 Min. ✓ 30 Min. ____ Other ____

10. M&TE Equipment No: CDS 4659, CDS 4660, CDS 2634 Calibration Due Date: 4/4/96, 4/4/96, 5/3/96 Temp

11. Prehydro Walkdown Complete/Accepted and Ready for Test: [signature] 1/23/96

12.

Remarks/Specific Records	Requirements/References	Criteria/Supplementary
All Joints were tested		[signature]

13. Acceptable No Leakage [signature] 1/25/96 Acceptable Allowable Leakage ____

13a. Verify restoration of test boundary and lay up requirements are complete.
CDE (signature) [signature] Date 1/26/96

14. Examinations completed for all required attributes
CDE (signature) [signature] Date 1/26/96

15. Inspections completed for all required attributes
CDE (signature) [signature] Date 3/26/96

Exhibit 1

SRS	**NONDESTRUCTIVE EXAMINATION REPORT BUBBLE LEAK TESTING**		REPORT NUMBER N/A
IR NO. N/A			PROJECT NUMBER 1780(m)
AREA S-LATE WASH	WORK PACKAGE NO. FT01	TEST PRESSURE 21 PSIG	DATE 1/25/96
ISO NO./DWG M-M6-S-0056 A/2	LINE NO./PART ID FILTRATE PIPING	BUBBLE SOLUTION TYPE LEAKTEC 277C	BSRI PROC. NO. BT-1 REV. 1
CODE/WELD CLASS B31.3 SEVERE CYCLIC	PRESSURIZING MEDIUM ARGON	PIPE DIA ½", 3", 6" / MATL TYPE 304L SS	TEMP: 48°F MATL
NUMBER OF WELDS TESTED: 72	NUMBER OF MECHANICAL JOINTS TESTED: 0	NUMBER OF LEAKS DETECTED: 0	GAGE M&TE NO. 3436 DUE DATE: 2/8/96

PART OR WELD NUMBER	DISPOSITION ACC	DISPOSITION REJ	REMARKS
ALL WELDS FT 26A	X		11 WELDS FIELD AND SHOP WELDS INCLUDING FILLETS
ALL WELDS FT 26B	X		15 WELDS
ALL WELDS FT 30A	X		6 WELDS
ALL WELDS FT 72A	X		10 WELDS
FW13-17	X		5 WELDS
ALL WELDS FT 24B	X		7 WELDS
ALL WELDS FT 24A			18 WELDS

SKETCH:

NOTES: REF. CAS 2694 Due 5/3/96 [illegible] 1/25/96	EXAMINER [illegible]	LEVEL II	DATE 1/25/96
	INTERPRETER [illegible]	LEVEL II	DATE 1/25/96
	WITNESSED BY/REVIEWED BY N/A		DATE

MQS NDE-018-LT
Rev. 1 5/94 BSRI

TEST RECORDS

PRECIPITATE LINES

- LEAK TESTS
- VACUUM BOX TESTS
- BUBBLE LEAK TESTS

W.P. PG. 117 OF 124

File ID CMP 03-6.10-3
Page 1 Of 1

Leak Test Data Sheet

WP Page 1

1. CMP 03-6.10, Rev. 2	2. Work Package No. 1780-LWM-2013-P-005
3. Design Class PS	4. Prepared by STEVE GREEN 4/26/95

5. Scope of Work/Item to be Tested: HYDRO. TEST PRECIPITATE PIPE LINE # PCP70 (REF. ISO# P-PI-S-0090)

6. Type of Test/Pressure: Hydro. ✓ / 210 PSIG Pneumatic ____ Other ____

7. Test Medium: Water ✓ Other ____

8. Test Pressure Tolerance: 200-220 Actual Test Pressure: 210 PSIG Test Temperature: 66°F

9. Test Duration: 10 Min. ✓ 30 Min. ____ Other ____

10. M&TE Equipment No: THERMOMETER 2629, GAUGE 4139 Calibration Due Date 6/19/95, 6/22/95

11. Prehydro Walkdown Complete/Accepted and Ready for Test: [signature] 4/26/95

12.

Remarks/Specific Records	Requirements/References	Criteria/Supplementary

WELDS FW22RS & FW21R1 PW 4/26/95
ALSO INCLUDED IN TEST / EXAMINED - FW15 (PRIOR TO RT) AND SHOP WELD (PREVIOUSLY TESTED) BETWEEN FW22RS AND FW21R1 PW 4/26/95

13. Acceptable No Leakage ✓	Acceptable Allowable Leakage ____

13a. Verify restoration of test boundary and lay up requirements are complete.
CDE (signature) [signature] Date 4/26/95

14. Examinations completed for all required attributes
CDE (signature) [signature] Date 4/26/95

15. Inspections completed for all required attributes
CDE (signature) [signature] Date 4-26-95

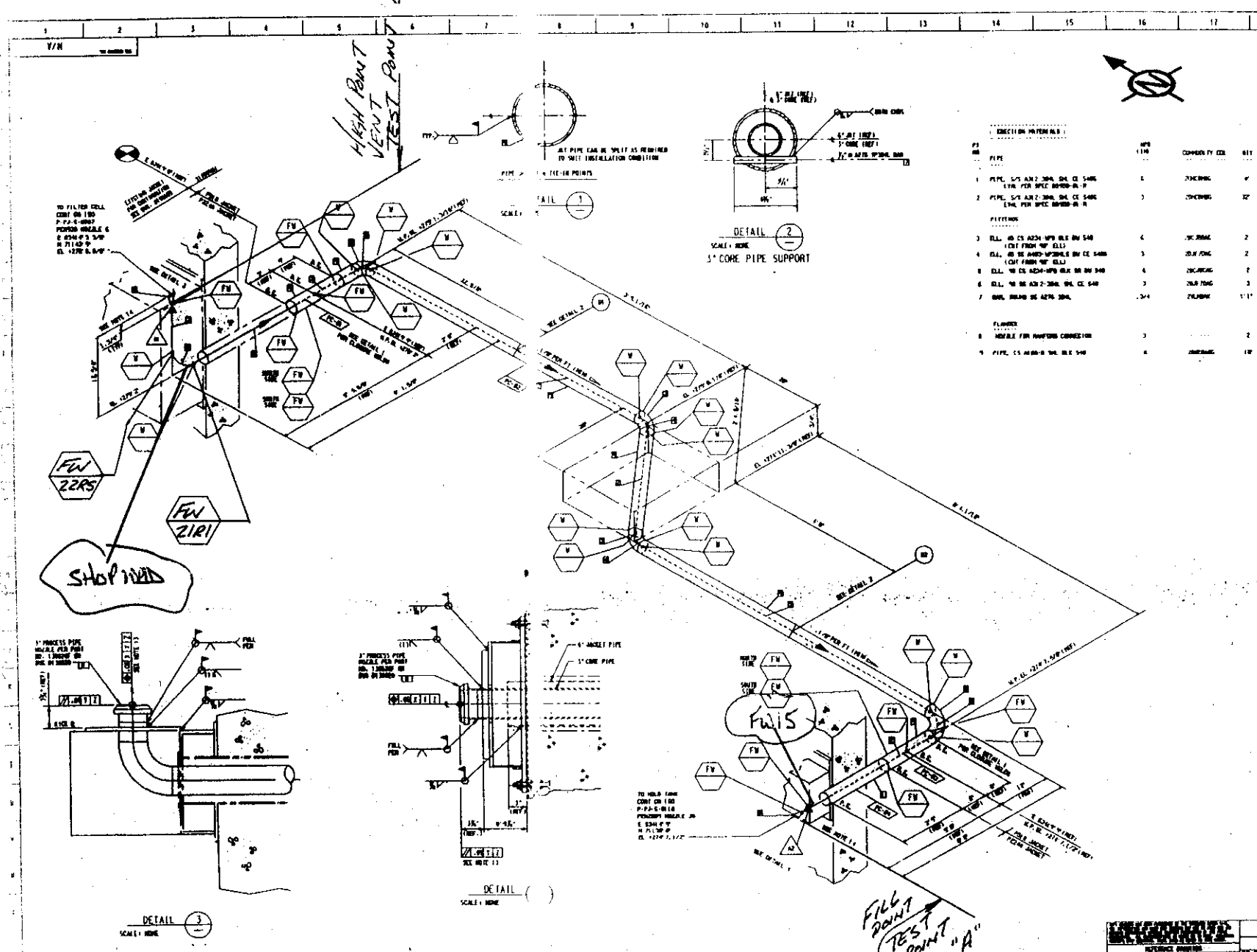

EJECTION MATERIALS

PS NO.	PIPE	NPS (IN)	COMMODITY CODE	QTY
1	PIPE, S/S A312 304L SH. CE 540S EVAL PER SPEC 09900-01-R	6	20HCRMBG	4'
2	PIPE, S/S A312 304L SH. CE 540S EVAL PER SPEC 09900-01-R	3	20HCRMBG	32'
	FITTINGS			
3	ELL, 45 CS A234 WPB BLK BW S40 (CUT FROM 90° ELL)	6	20C.RMAG	2
4	ELL, 45 SS A403 WP304L BW CE S40S (CUT FROM 90° ELL)	3	20.N/CMG	2
5	ELL, 90 CS A234 WPB BLK BW S40	6	20C.RMAG	2
6	ELL, 90 SS A312 304L SH. CE S40	3	20.N/CMG	3
7	BARL ROUND SS A276 304L	.3/4	20LMBAR	1'1"
	FLANGES			
8	NOZZLE FOR MANFORD CONNECTION	3		2
9	PIPE, CS A106-B SH. BLK S40	6	20HCRMBG	12'

NOTES

1. PERFORM A HELIUM LEAK TEST ON CORE PIPE PER P224 AND 0501 UNDESTRUCTIVE EXAMINATION STANDARD ALT-1 R/1. VERIFY HELIUM LEAK TEST IS IN ACCORDANCE WITH ASME STANDARD ALT-1 R/1. ACCEPTANCE CRITERIA IS ZERO LEAKAGE THAT CAN BE DETECTED BY USING COMPOUND SPECIFIED IN THE PROCEDURE. THE GAS ANGLE TEST PER P224 AND AS SPECIFIED IN ARTICLE 10 SECTION 5 OF THE DPV CODE AT 30 +/-0 PSIG IS ACCEPTABLE IN LIEU OF HELIUM LEAK TEST. GAS ANGLE TEST PER ASME SEC 8/9.
2. ALL PIPING TO BE PER WSRC DOCA 15060-01-R, P-CODE P224A (CORE), P224 (JET) AND P010 (JET).
3. FOR HYDROSTATIC TEST PRESSURE SEE PRODUCT AND SERVICE INDEX H-PSI-S-00090.
4. UNDERGROUND PIPING JACKET AND SLEEVES SHALL BE PROVIDED WITH EXTERNAL PROTECTION PER THE FOLLOWING: STAINLESS STEEL IS TO BE COATED PER 09900-10-R SHOP DIV. CARBON STEEL IS TO BE COATED PER 09900-09-R SHOP DIV. SEE H-DLP-S-00731.
5. FUNCTIONAL CLASSIFICATION FOR ALL PIPE AND COMPONENTS WILL BE PS.
6. DELETED.
7. DELETED.
8. DELETED.
9. GUIDE AND SUPPORT MATERIAL IS NOT REQUIRED TO BE CORROSION EVALUATED.
10. DIMENSIONS LESS THAN 2' OF ARE GIVEN IN INCHES.
11. FOR CORE PIPE STRESS ANALYSIS, SEE CALCULATION H-CLC-S-00025, REV. A.
12. DIMENSIONS ARE FINE LENGTH.
13. PRIMARY DATUM "X,Y,Z" ARE THE BASIC CONTROL DATUM TO BE ESTABLISHED BY FIELD FOR REFERENCE PURPOSE. THEY WILL BE USED FOR FIELD INSTALLATION OF STRUCTURES TO ACHIEVE THE REQUIRED POSITIONAL TOLERANCES.
14. PIPE FABRICATION SHOP TO ALLOW 2' OF ADDITIONAL LENGTH FOR FIELD FIT UP.

LEGEND

- SUPPORT
- ANCHOR

P PI S 0090 0

UNITED STATES DEPARTMENT OF ENERGY

SAVANNAH RIVER SITE

SAVANNAH RIVER SITE 200S AREA
DEFENSE WASTE PROCESSING FACILITY
LATE WASH FACILITY

PRECIPITATE FROM FILTER TO HOLD TANK
UNDERGROUND ISOMETRIC
PCP/D-P224A-3 CORE/P224-6 JACKET (U)

NONE | N/A | 1 OF 1 | 0

Leak Test Data Sheet

WP Page 1 of ___

1. CMP 03-6.10, Rev. 2	2. Work Package No. 1780-LWM-2013-P-005
3. Design Class PS	4. Prepared by DL POSTMA

5. Scope of Work/Item to be Tested: PERFORM HYDRO TEST ON PRECIPITATE WASHING AND TRANSFER CORE PIPE FIELD WELDS (REF ISO# P-PI-S-0090) TEST PER DESIGN CRITERIA. FW 12, 13

6. Type of Test/Pressure: Hydro ✓ 210 PSIG Pneumatic ___ Other ___

7. Test Medium: Water ✓ Other ___

8. Test Pressure Tolerance: 200-220 PSIG Actual Test Pressure: 210 PSIG 3-5-95 Test Temperature: 65°F

9. Test Duration: 10 Min. ✓ 30 Min. ___ Other ___

10. M&TE Equipment No: CDS 4140 Calibration Due Date 4-10-95

11. Prehydro Walkdown Complete/Accepted and Ready for Test: [signature]

12.

Remarks/Specific Records	Requirements/References	Criteria/Supplementary
DIGITAL THERMOMETER CDS 2980 DUEDATE: 3-23-95		

13. Acceptable No Leakage ✓	Acceptable Allowable Leakage ___

13a. Verify restoration of test boundary and lay up requirements are complete.
CDE (signature) [signature] Date 2-15-95

14. Examinations completed for all required attributes
CDE (signature) [signature] Date 2-15-95

15. Inspections completed for all required attributes
CDE (signature) [signature] Date 3-9-95

PG. 2 OF

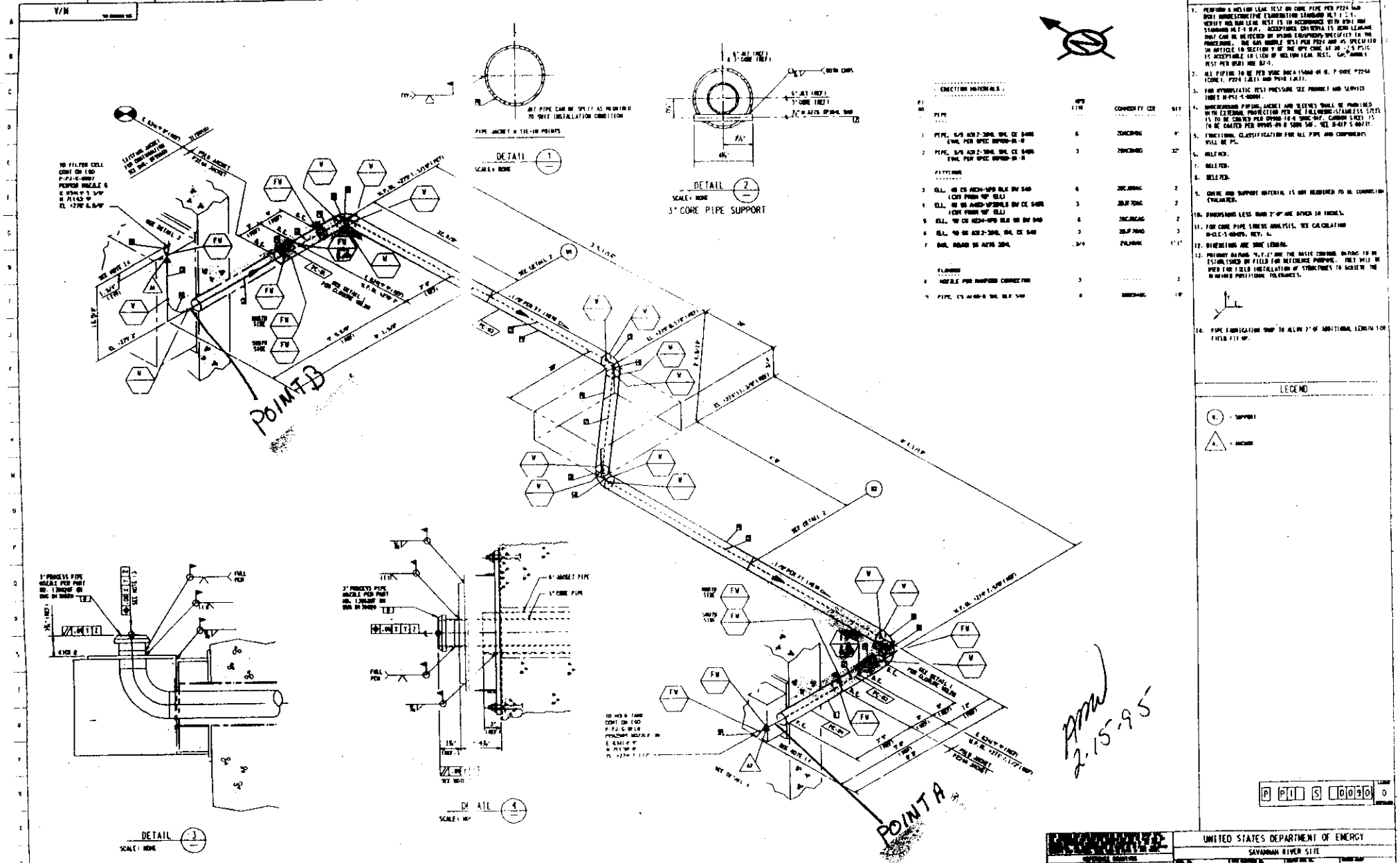
NOTES
LEGEND
DETAIL 1
DETAIL 2
3" CORE PIPE SUPPORT
DETAIL 3
DETAIL 4
POINT B
POINT A
UNITED STATES DEPARTMENT OF ENERGY
SAVANNAH RIVER SITE
SAVANNAH RIVER SITE 2005 AREA
DEFENSE WASTE PROCESSING FACILITY
LATE WASH FACILITY
PRECIPITATE FROM FILTER TO HOLD TANK
UNDERGROUND ISOMETRIC
PCP70-P224A-3 CORE /P224-6 JACKET (U)

W.P. PG. 123 OF 124

File ID CMP 03-6.10-3
Page 1 Of 1

Leak Test Data Sheet

WP Page 1 of

1. CMP 03-6.10, Rev. 2	2. Work Package No. 1780-LWM-Z013-P005
3. Design Class PS	4. Prepared by A.D. WISHAM

5. Scope of Work/Item to be Tested: HYDRO TEST PRECIPITATE PIPE LINE PCP 70 (REF ISO P-PI-5-0090)

6. Type of Test/Pressure: Hydro ✓ 208 PSIG Pneumatic ____ Other ____

7. Test Medium: Water ✓ Other ____

8. Test Pressure Tolerance: 200 - 220 Actual Test Pressure: 208 PSIG Test Temperature: 78.4°F

9. Test Duration: 10 Min. ✓ 30 Min. ____ Other ____

10. M&TE Equipment No: THERM. CDS 2190 GAUGE CDS-2369 Calibration Due Date 9-8-95 7-12-95

11. Pre-Hydro Walkdown Complete/Accepted and Ready for Test: [signature]

12.

Remarks/Specific Records	Requirements/References	Criteria/Supplementary
FW 11, 14, 15, 20		

13. Acceptable No Leakage ✓ AM 5/16/95	Acceptable Allowable Leakage ____

13a. Verify restoration of test boundary and lay up requirements are complete.
CDE (signature) [signature] Date 5-9-95

14. Examinations completed for all required attributes
CDE (signature) [signature] Date 5-9-95

15. Inspections completed for all required attributes
CDE (signature) [signature] Date 5-16-95

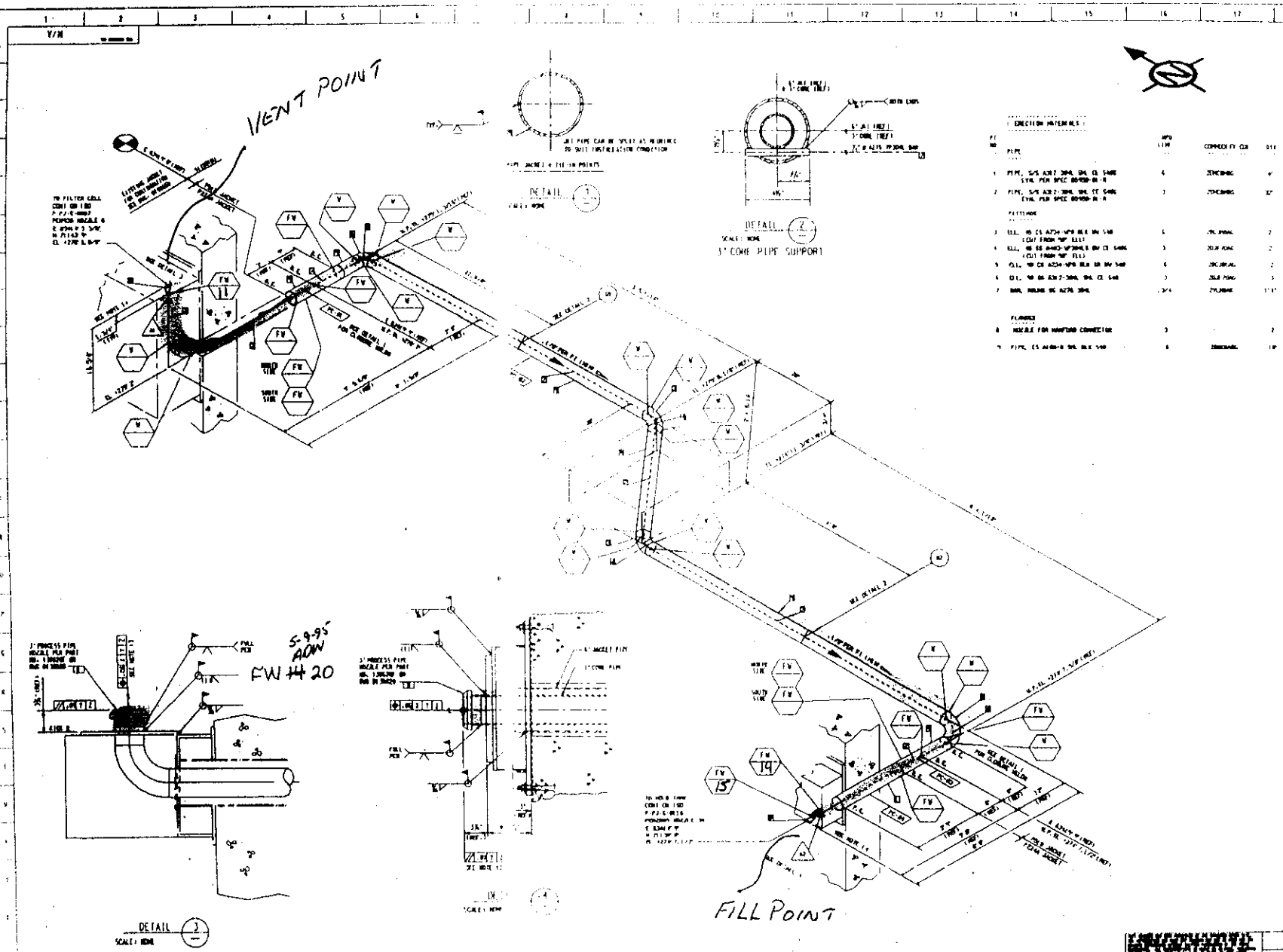

NOTES

1. PERFORM A HELIUM LEAK TEST ON CORE PIPE PER P224 AND PER NONDESTRUCTIVE EXAMINATION STANDARD NET 1 R/1. VERIFY HELIUM LEAK TEST IS IN ACCORDANCE WITH PSAI AND STANDARD NET-1 R/1. ACCEPTANCE CRITERIA IS ZERO LEAKAGE THAT CAN BE DETECTED BY USING EQUIPMENT SPECIFIED IN THE PROCEDURE. THE GAS MANIFOLD TEST PER P224 AND AS SPECIFIED IN ARTICLE 10 SECTION 7 OF THE RPS CORE AT 30 +/-5 PSIG IS ACCEPTABLE TO LIEU OF HELIUM LEAK TEST. GAS MANIFOLD TEST PER NSRI NOE 87-3.
2. ALL PIPING TO BE PER USBC DOCA 15004 49 B, P CODE P224A (CORE), P224 (JET) AND P518 (JET).
3. FOR HYDROSTATIC TEST PRESSURE SEE PRODUCT AND SERVICE INDEX H PSI S-00001.
4. UNDERGROUND PIPING, JACKET AND SLEEVES SHALL BE PROVIDED WITH EXTERNAL PROTECTION PER THE FOLLOWING (STAINLESS STEEL IS TO BE COATED PER OPSOR 10 E SAME SAF. CARBON STEEL IS TO BE COATED PER OPSOR 49 E SAME SAF. SEE 3-417-S-00737.
5. FUNCTIONAL CLASSIFICATION FOR ALL PIPE AND COMPONENTS WILL BE PS.
6. DELETED.
7. DELETED.
8. DELETED.
9. GUIDE AND SUPPORT MATERIAL IS NOT REQUIRED TO BE COMPLETELY EVALUATED.
10. DIMENSIONS LESS THAN 2' 0" ARE GIVEN IN INCHES.
11. FOR CORE PIPE STRESS ANALYSIS, SEE CALCULATION NCLC S 00429, REV. A.
12. DIMENSIONS ARE TRUE LENGTH.
13. PRIMARY DATUMS "X,Y,Z" ARE THE BASIC CONTROL DATUMS TO BE ESTABLISHED BY FIELD FOR REFERENCE PURPOSE. DIET WILL BE USED FOR FIELD INSTALLATION OF STRUCTURES TO ACHIEVE THE REQUIRED POSITIONAL TOLERANCES.
14. PIPE FABRICATION SHOP TO ALLOW 2" OF ADDITIONAL LENGTH FOR FIELD FIT UP.

LEGEND

V SUPPORT

A ANCHOR

P PI S 0090 0

UNITED STATES DEPARTMENT OF ENERGY

SAVANNAH RIVER SITE

SAVANNAH RIVER SITE 200S AREA
DEFENSE WASTE PROCESSING FACILITY
LATE WASH FACILITY

PRECIPITATE FROM FILTER TO HOLD TANK
UNDERGROUND ISOMETRIC
PCP/D-P224A-3 CORE/P224-6 JACKET (U)

REFERENCE DRAWINGS

REFERENCE STANDARDS

W.P. PG. 103 OF 104

File ID CMP 03-6.10-3
Page 1 Of 1

Leak Test Data Sheet

WP Page 1 of ___

1. CMP03-6.10, Rev. 2	2. Work Package No. 1780-LWM-Z013-P-005
3. Design Class PS	4. Prepared by STEVE GREEN

5. Scope of Work/Item to be Tested: HYDRO. TEST PRECIPITATE PIPE LINE # PCP54 (REF. ISO.# P-PI-S-0081)

6. Type of Test/Pressure: Hydro ✓ /210PSIG Pneumatic ___ Other ___

7. Test Medium: Water ✓ Other ___

8. Test Pressure Tolerance: 200-220 PSIG Actual Test Pressure: 209 PSIG Test Temperature: 74°F

9. Test Duration: 10 Min. ✓ 30 Min. ___ Other ___

10. M&TE Equipment No: GAUGE CDS4139 THERM. CDS 2629 Calibration Due Date 6/22/95 6/19/95

11. Prehydro Walkdown Complete/Accepted and Ready for Test: [signature]

12.

Remarks/Specific Records	Requirements/References	Criteria/Supplementary
FW1, FW4, & FW17 & FW16		

13. Acceptable No Leakage ✓ Acceptable Allowable Leakage ___

13a. Verify restoration of test boundary and lay up requirements are complete.
CDE (signature) [signature] Date 5/4/95

14. Examinations completed for all required attributes
CDE (signature) [signature] Date 5/4/95

15. Inspections completed for all required attributes
CDE (signature) [signature] Date 5/4/95

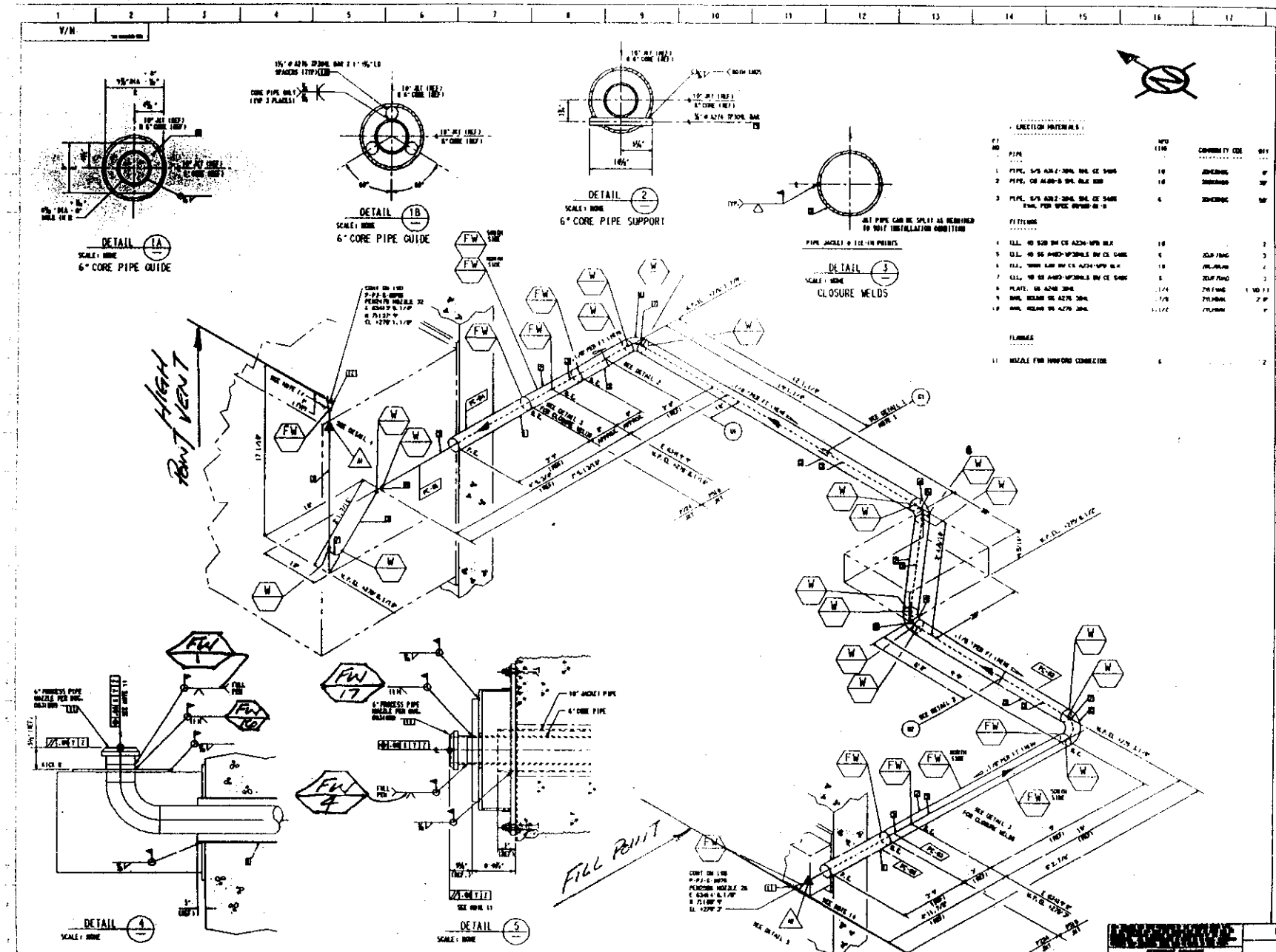
DETAIL 1A
SCALE: NONE
6" CORE PIPE GUIDE
DETAIL 1B
SCALE: NONE
6" CORE PIPE GUIDE
DETAIL 2
SCALE: NONE
6" CORE PIPE SUPPORT
DETAIL 3
SCALE: NONE
CLOSURE WELDS
DETAIL 4
SCALE: NONE
DETAIL 5
SCALE: NONE
HIGH POINT VENT
FILL POINT
NOTES
LEGEND
UNITED STATES DEPARTMENT OF ENERGY
SAVANNAH RIVER SITE
SAVANNAH RIVER SITE 2005 AREA
DEFENSE WASTE PROCESSING FACILITY
LATE WASH FACILITY
PRECIPITATE TO FILTER
UNDERGROUND ISOMETRIC
PCP54-P224A-6 CORE/PS1B-10 JACKET (U)

Leak Test Data Sheet

WP Page 1 of ___

1. CMP 03-6.10, Rev. 2	2. Work Package No. 1780-LWM-2013-P-005
3. Design Class PS	4. Prepared by DL POSTMA

5. Scope of Work/Item to be Tested: PERFORM HYDRO TEST ON PRECIPITATE WASHING AND TRANSFER CORE PIPE FIELD WELDS (REF ISO # P-PI-S-0081) TEST PER DESIGN CRITERIA. FW 2C1 & FW 3

6. Type of Test/Pressure: Hydro ✓ 210 PSIG Pneumatic ___ Other ___

7. Test Medium: Water ✓ Other ___

8. Test Pressure Tolerance: 200 - 220 PSIG Actual Test Pressure: 215 PSIG Test Temperature: 60.1°F

9. Test Duration: 10 Min. ✓ 30 Min. ___ Other ___

10. M&TE Equipment No: GAUGE CDS 2028 TEMP. THERM. CDS 2980 Calibration Due Date 4-4-95 3-23-95

11. Prehydro Walkdown Complete/Accepted and Ready for Test: Steve A. Green

12.

Remarks/Specific Records	Requirements/References	Criteria/Supplementary
FW 2C1		
FW 3		

13. Acceptable No Leakage Steve A. Green	Acceptable Allowable Leakage — 0 —

13a. Verify restoration of test boundary and lay up requirements are complete.
CDE (signature) Steve A. Green Date 2/20/95

14. Examinations completed for all required attributes
CDE (signature) Steve A. Green Date 2/20/95

15. Inspections completed for all required attributes
CDE (signature) Steve A. Green E B Edmunds Date 2/20/95 3-5-95

PG. 2 OF

W.P. 1780-LWM-2013-P-005 PG. 100 OF 124

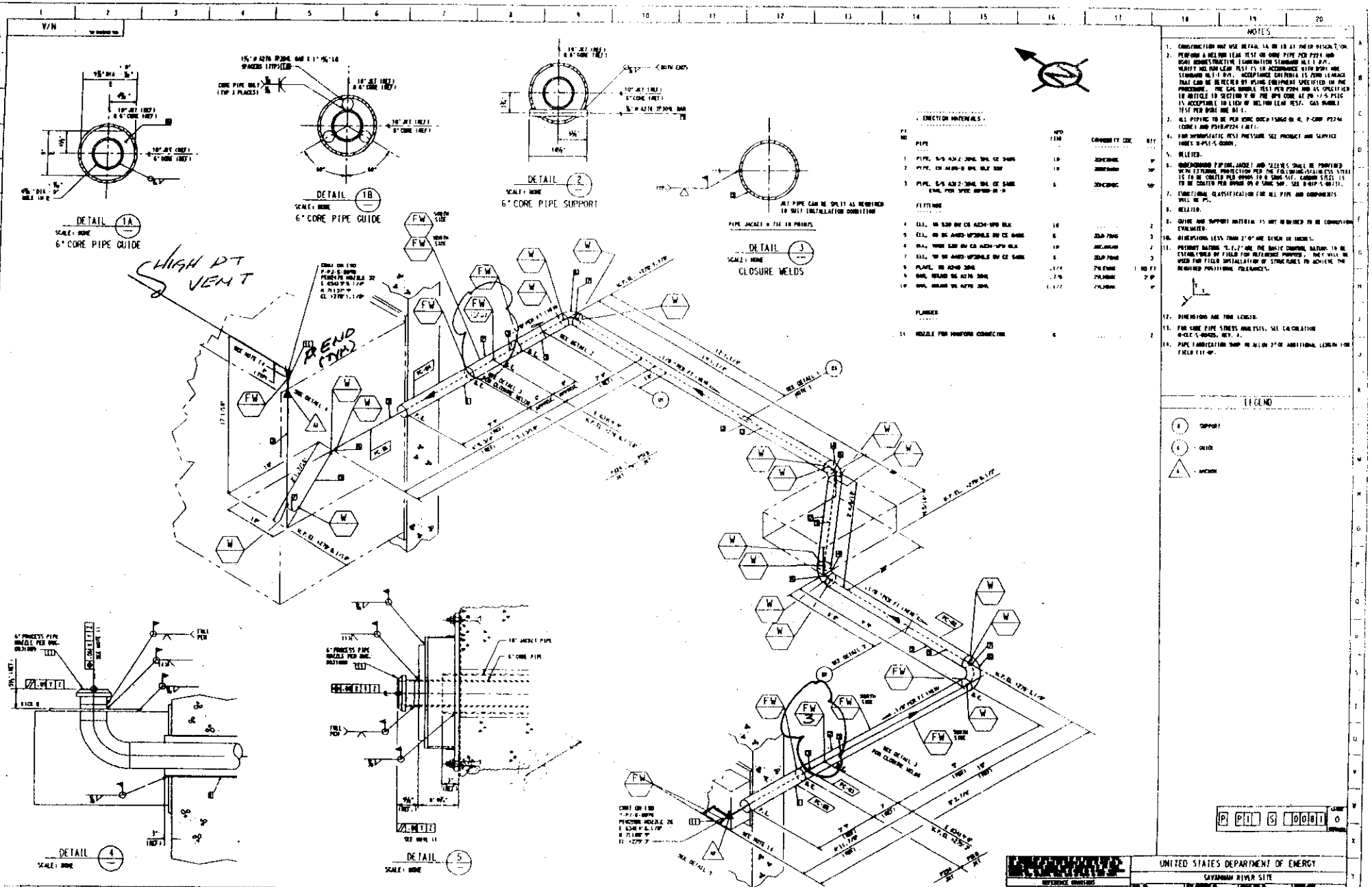

File ID CMP 03-6.10-3
Page 1 Of 1

Leak Test Data Sheet

WP Page 1 of ___

1. CMP 03-6.10, Rev. 2

2. Work Package No. 1780-LWM-2013-P-005

3. Design Class PS

4. Prepared by STEVE GREEN

5. Scope of Work/Item to be Tested: HYDRO. TEST PRECIPITATE PIPE LINE # PCP57 (REF. ISO# P-PI-S-0082)

6. Type of Test/Pressure: Hydro ✓ / 210 PSIG Pneumatic ___ Other ___

7. Test Medium: Water ✓ Other ___

8. Test Pressure Tolerance: 200-220 PSIG Actual Test Pressure: 210 PSIG Test Temperature: 73°

9. Test Duration: 10 Min. ✓ 30 Min. ___ Other ___

10. M&TE Equipment No: GAUGE CDS 4139 TEMP. THERM. Calibration Due Date 6/22/95 6/19/95

11. Prehydro Walkdown Complete/Accepted and Ready for Test: ___

12.

Remarks/Specific Records	Requirements/References	Criteria/Supplementary
FW's #'s 5, 10, 18 & 19		

13. Acceptable No Leakage [signature] Acceptable Allowable Leakage ___

13a. Verify restoration of test boundary and lay up requirements are complete.
CDE (signature) [signature] Date 5/4/95

14. Examinations completed for all required attributes
CDE (signature) [signature] Date 5/4/95

15. Inspections completed for all required attributes
CDE (signature) [signature] Date 5/15/95

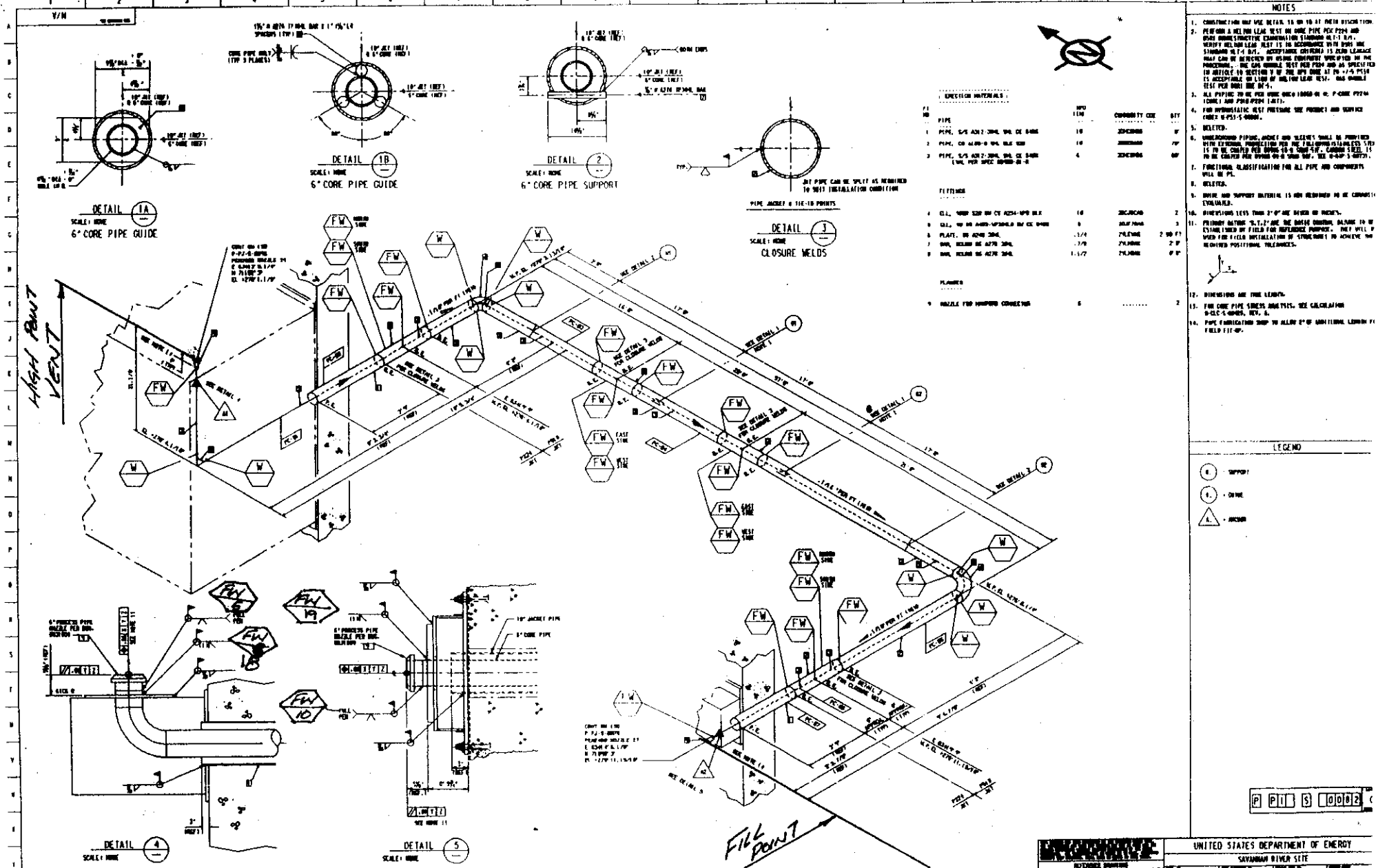
DETAIL 1A
SCALE: NONE
6" CORE PIPE GUIDE
DETAIL 1B
SCALE: NONE
6" CORE PIPE GUIDE
DETAIL 2
SCALE: NONE
6" CORE PIPE SUPPORT
PIPE JACKET & TIE-IN POINTS
DETAIL 3
SCALE: NONE
CLOSURE WELDS
HIGH POINT VENT
FILL POINT
DETAIL 4
SCALE: NONE
DETAIL 5
SCALE: NONE
NOTES
LEGEND
UNITED STATES DEPARTMENT OF ENERGY
SAVANNAH RIVER SITE
SAVANNAH RIVER SITE 2005 AREA
DEFENSE WASTE PROCESSING FACILITY
LATE WASH FACILITY
PRECIPITATE FROM FILTER
TO PRECIPITATE TANK
UNDERGROUND ISOMETRIC
PCP57-P224A-6 CORE/P518-10 JACKET (U)

File ID CMP 03-6.10-3
Page 1 Of 1

Leak Test Data Sheet

WP Page 1 of 2

1. CMP 03-6.10, Rev. 2	2. Work Package No. 1780-LWM-2013-P-005
3. Design Class PS	4. Prepared by STEVE GREEN

5. Scope of Work/Item to be Tested: PERFORM HYDRO. TEST ON PRECIPITATE WASHING AND TRANSFER CORE PIPE FIELD WELDS. (REF. ISO# P-PI-S-0082) TEST PER DESIGN CRITERIA.
~~PIPE BETWEEN~~ SG 2/23/95
SG 2/23/95 ~~FW6 & FW9~~ FW 7&8

6. Type of Test/Pressure: Hydro. ✓ 210 Pneumatic _____ Other _____

7. Test Medium: Water ✓ Other _____

8. Test Pressure Tolerance: 200-220 PSIG Actual Test Pressure: 210 PSIG Test Temperature: 57.2°F

9. Test Duration: 10 Min. ✓ 30 Min. _____ Other _____

10. M&TE Equipment No: CDS 2980 DIGITAL THERMOMETER 3-23-95
CDS 2028 GAUGE Calibration Due Date 4-4-95

11. Prehydro Walkdown Complete/Accepted and Ready for Test: Dana L. Postma ~~32°~~ DLJ 2/22/95 2-22-95

12.

Remarks/Specific Records	Requirements/References	Criteria/Supplementary
~~FW6~~ FW 7, 8		
~~FW9~~ DLJ 2/23/95		

13. Acceptable No Leakage D. L. Postma 2-22-95 Acceptable Allowable Leakage 0

13a. Verify restoration of test boundary and lay up requirements are complete.
CDE (signature) D. L. Postma Date 2-22-95

14. Examinations completed for all required attributes
CDE (signature) D. L. Postma Date 2-22-95

15. Inspections completed for all required attributes
CDE (signature) D. L. Postma Steve A. Green 2/23/95 Date 2-22-95

PG. 2 OF 2

W.P. 1780-WM-2013-P-005 PG. 112 OF 124

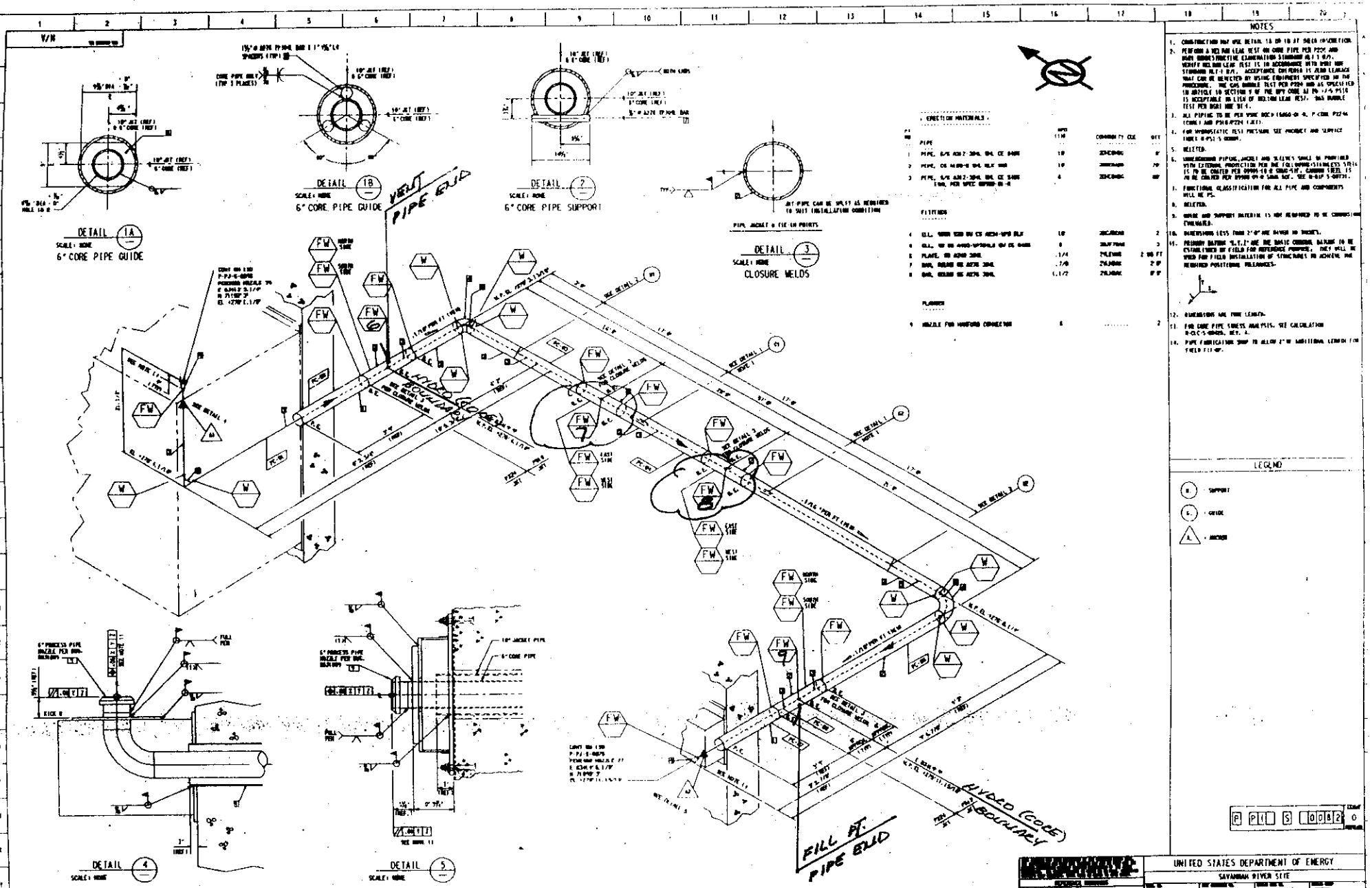

W.P. PG. 113 OF 124

File ID CMP 03-6.10-3
Page 1 Of 1

Leak Test Data Sheet

WP Page ___ of ___

1. CMP 03-6.10, Rev. 2	2. Work Package No. 1780-LWM-2013-P-005
3. Design Class PS	4. Prepared by STEVE GREEN

5. Scope of Work/Item to be Tested: HYDRO. TEST ON PRECIPITATE CORE PIPE FIELD WELDS (REF. ISO# P-PI-S-0082)

6. Type of Test/Pressure: Hydro ✓ 210 PSIG Pneumatic ___ Other ___

7. Test Medium: Water ✓ Other ___

8. Test Pressure Tolerance: 200-220 PSIG Actual Test Pressure: 210 PSIG Test Temperature: ___

9. Test Duration: 10 Min. ✓ 30 Min. ___ Other ___

10. M&TE Equipment No: GAUGE CDS 2028 DIGITAL THERM. CDS 2980 Calibration Due Date 4/4/95 3/23/95

11. Prehydro Walkdown Complete/Accepted and Ready for Test: Steve A. Green

12.

Remarks/Specific Records	Requirements/References	Criteria/Supplementary
FW6 & 9		

13. Acceptable No Leakage Steve A. Green	Acceptable Allowable Leakage ___

13a. Verify restoration of test boundary and lay up requirements are complete.

CDE (signature) Steve A. Green Date 2/28/95

14. Examinations completed for all required attributes

CDE (signature) Steve A. Green Date 2/28/95

15. Inspections completed for all required attributes

CDE (signature) [illegible] Date 3-5-95

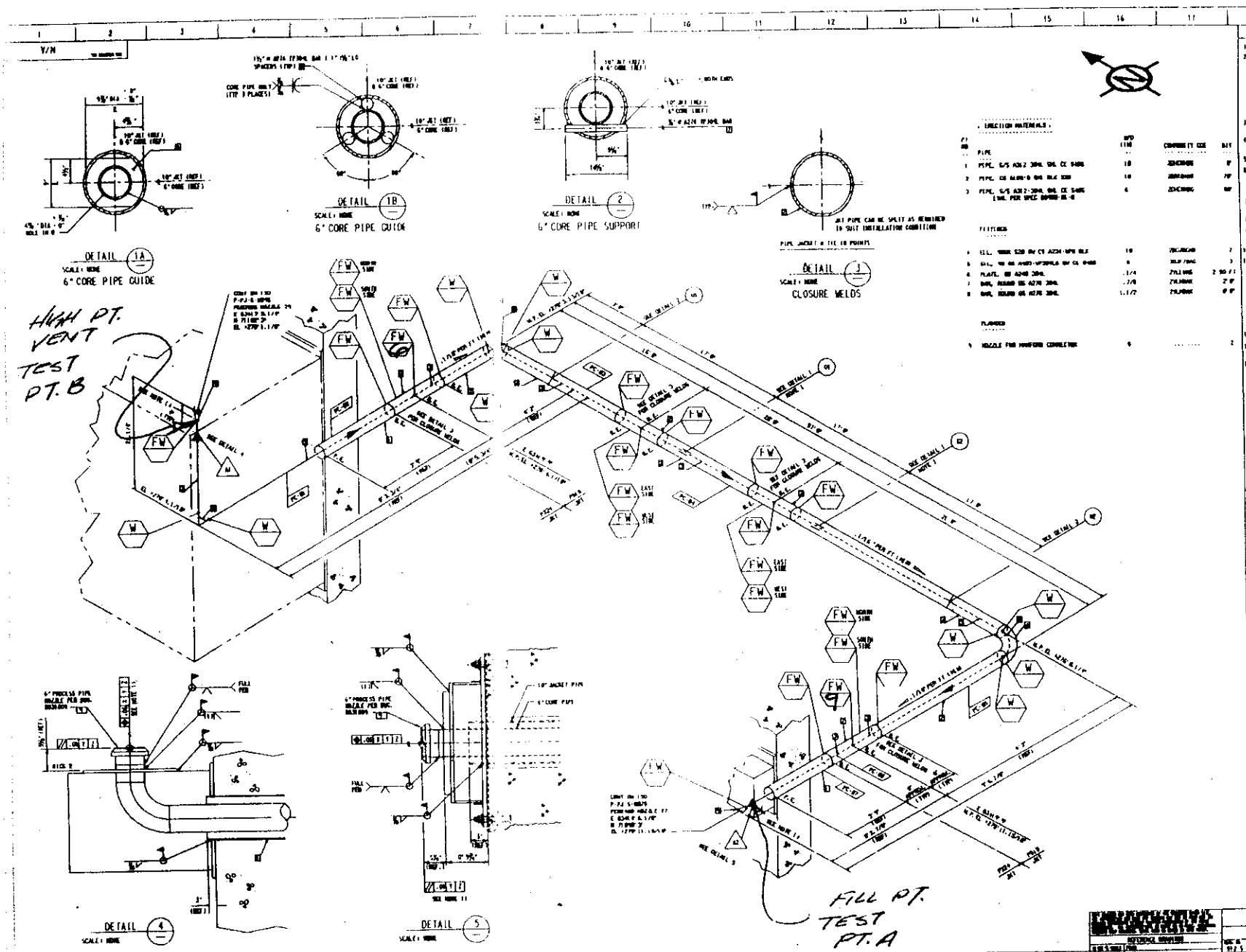
DETAIL 1A
6" CORE PIPE GUIDE
DETAIL 1B
6" CORE PIPE GUIDE
DETAIL 2
6" CORE PIPE SUPPORT
DETAIL 3
CLOSURE WELDS
DETAIL 4
DETAIL 5
HIGH PT. VENT TEST PT. B
FILL PT. TEST PT. A
NOTES
LEGEND
UNITED STATES DEPARTMENT OF ENERGY
SAVANNAH RIVER SITE
SAVANNAH RIVER SITE 2005 AREA
DEFENSE WASTE PROCESSING FACILITY
LATE WASH FACILITY
PRECIPITATE FROM FILTER
TO PRECIPITATE TANK
UNDERGROUND ISOMETRIC
PCP57-P224A-6 CORE/P51B-10 JACKET (U)

File ID CMP 03-6.10-3
Page 1 Of 1

Leak Test Data Sheet

WP Page 1 of ___

1. CMP 03-6.10, Rev. 2	2. Work Package No. 1780-CWM-2013-P-005
3. Design Class PS	4. Prepared by DL POSTMA

5. Scope of Work/Item to be Tested: PERFORM HYDRO TEST ON PRECIPITATE WASHING AND TRANSFER JACKET PIPE FIELD WELDS (REF. ISO# P-PI-S-0082). TEST PER DESIGN CRITERIA.

6. Type of Test/Pressure: Hydro ✓ 52 PSIG Pneumatic ___ Other ___

7. Test Medium: Water ✓ Other ___

8. Test Pressure Tolerance: 50 - 55 PSIG Actual Test Pressure: 52 PSIG Test Temperature: 63°F

9. Test Duration: 10 Min. ✓ 30 Min. ___ Other ___

10. M&TE Equipment No: CDS # 4155 Calibration Due Date 4-14-95

11. Prehydro Walkdown Complete/Accepted and Ready for Test: ___

12.

Remarks/Specific Records	Requirements/References	Criteria/Supplementary
FW 41, 42, 43, 44, 45, 46, 47, 48.		
DIGITAL THERMOMETER CDS # 2980 DUE DATE 3-23-95		

13. Acceptable No Leakage ✓	Acceptable Allowable Leakage ___

13a. Verify restoration of test boundary and lay up requirements are complete.
CDE (signature) [signature] Date 2-24-95

14. Examinations completed for all required attributes
CDE (signature) [signature] Date 2-24-95

15. Inspections completed for all required attributes
CDE (signature) [signature] Date 5-9-95

PG. 2 OF

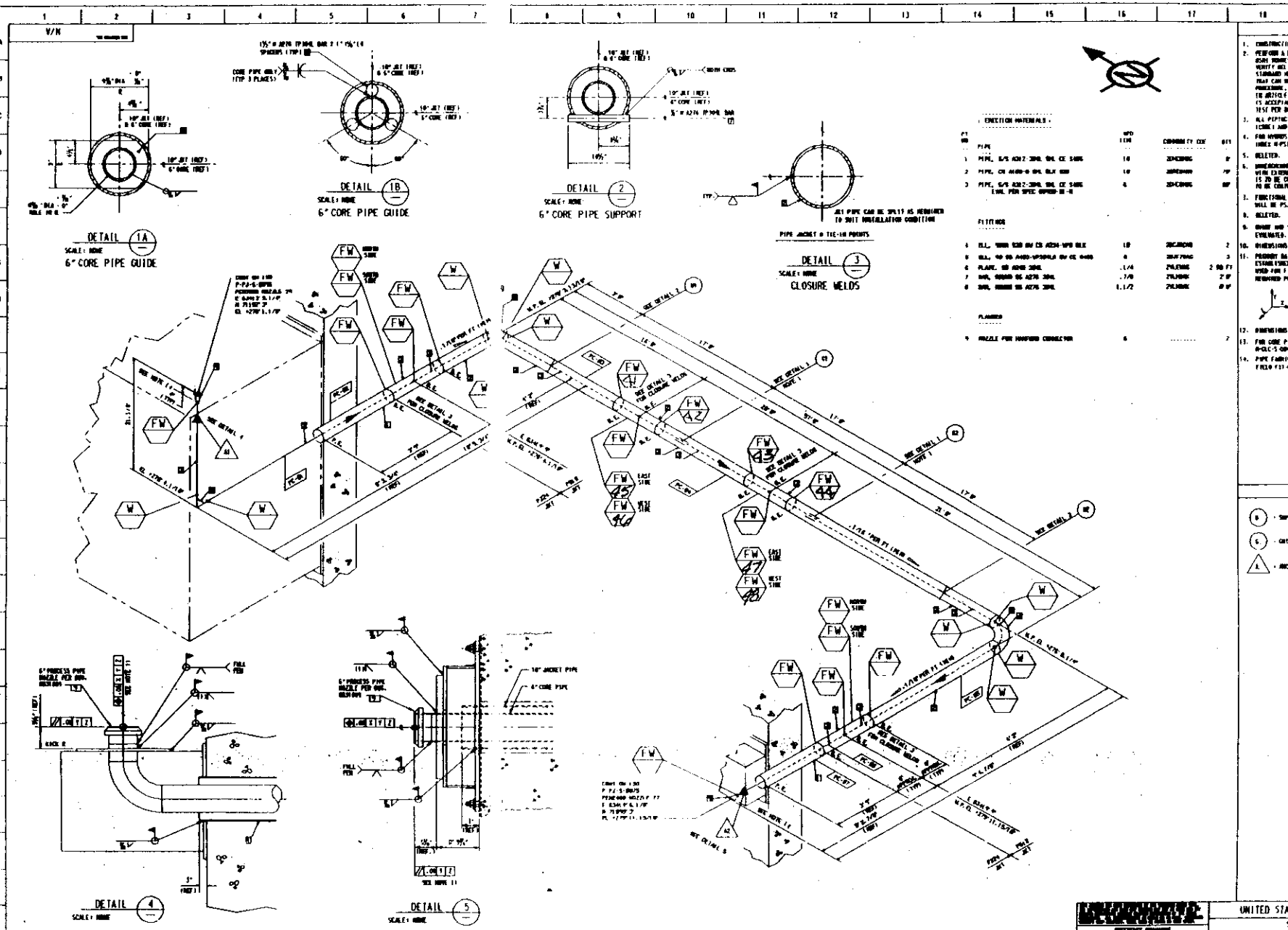

ERECTION MATERIALS

ITEM		QTY	COMMODITY CODE	QTY
	PIPE			
1	PIPE, S/S A312-304L SML CE SCH5	10	304C0H5	8'
2	PIPE, CS A106-B SML BLK SCH	10'	30PE0H0	70'
3	PIPE, S/S A312-304L SML CE SCH5 EXCL PER SPEC 0PP00-00-A	6	304C0H5	80'
	FITTINGS			
4	ELL, 90DEG SCH 5S BW CS A234-WPB BLE	10	30CJ0H0	2
5	ELL, 90 DG A403-WP304L BW CE SCH5	4	304F70H0	3
6	FLANGE, SO A240 304L	.1/4	2HLE0H0	2.00 FT
7	BOLT, HEXHD SS A276 304L	.7/8	2HJ0H0	2' 0"
8	BOLT, HEXHD SS A276 304L	1.1/2	2HJ0H0	0' 0"
	FLANGED			
9	NOZZLE PER HANFORD CONNECTOR	6	.....	2

NOTES

1. CONSTRUCTION MAY USE DETAIL 1A OR 1B AT THEIR DISCRETION.
2. PERFORM A HELIUM LEAK TEST ON CORE PIPE PER P274 AND A 0500 NONDESTRUCTIVE EXAMINATION STANDARD N-T-0-01. VERIFY HELIUM LEAK TEST IS IN ACCORDANCE WITH 0500 NDE STANDARD N-T-1-01. ACCEPTANCE CRITERIA IS ZERO LEAKAGE THAT CAN BE DETECTED BY USING EQUIPMENT SPECIFIED IN THE PROCEDURE. THE GAS BUBBLE TEST PER P274 AND AS SPECIFIED IN APPENDIX B TO SECTION V OF THE ASME CODE AT 20 1/4 PSIG IS ACCEPTABLE IN LIEU OF HELIUM LEAK TEST. GAS BUBBLE TEST PER 0500 NDE N-T-1.
3. ALL PIPING TO BE PER WSRC OCD> 16060-00-0, P-CORE P274 ISOMETRIC AND P518-P224 (JDT).
4. FOR HYDROSTATIC TEST PRESSURE SEE PRODUCT AND SERVICE INDEX H-PS1-S-0000.
5. DELETED.
6. UNDERGROUND PIPING, JACKET AND SLEEVES SHALL BE PROVIDED WITH EXTERNAL PROTECTION PER THE FOLLOWING:STAINLESS STEEL IS TO BE COATED PER 0PP00-10-0 SHEET 5-17. CARBON STEEL IS TO BE COATED PER 0PP00-00-A SHEET 5-17. SEE H-CAP-S-00731.
7. FUNCTIONAL CLASSIFICATION FOR ALL PIPE AND COMPONENTS WILL BE PS.
8. DELETED.
9. GASKET AND SUPPORT MATERIAL IS NOT REQUIRED TO BE CORROSION EVALUATED.
10. DIMENSIONS LESS THAN 2'-0" ARE GIVEN IN INCHES.
11. PRIMARY DATUM "X,Y,Z" ARE THE BASIC COORDS. DATUMS TO BE ESTABLISHED BY FIELD FOR REFERENCE PURPOSE. THEY WILL BE USED FOR FIELD INSTALLATION OF STRUCTURES TO ACHIEVE THE REQUIRED POSITIONAL TOLERANCES.
12. DIMENSIONS ARE TRUE LENGTH.
13. FOR CORE PIPE STRESS ANALYSIS, SEE CALCULATION H-CLC-S-00425, REV. 4.
14. PIPE FABRICATION SHOP TO ALLOW 2" OF ADDITIONAL LENGTH FOR FIELD FIT-UP.

LEGEND

- (S) - SUPPORT
- (G) - GUIDE
- (A) - ANCHOR

P PI S 0082 0

UNITED STATES DEPARTMENT OF ENERGY
SAVANNAH RIVER SITE

SAVANNAH RIVER SITE 2005 AREA
DEFENSE WASTE PROCESSING FACILITY
LATE WASH FACILITY
PRECIPITATE FROM FILTER
TO PRECIPITATE TANK
UNDERGROUND ISOMETRIC
PCP57-P224A-6 CORE/P518-10 JACKET (U)

N/A | 1 OF 1 | 0

REV.	DATE	REVISIONS
0	12-2-04	FOR DEVELOPMENT USE
0		FOR CONSTRUCTION

Exhibit 1

SRS	**NONDESTRUCTIVE EXAMINATION REPORT BUBBLE LEAK TESTING**		REPORT NUMBER N/A
IR NO. N/A			PROJECT NUMBER 1780 (M)
AREA 5 LATE WASH	WORK PACKAGE NO. 1780-LWM-2013-P005	TEST PRESSURE 21 PSIG	DATE 2/20/95
ISO NO./DWG P.PI-S-0081/0	LINE NO./PART ID PCP 5A	BUBBLE SOLUTION TYPE LEAK TEC Z-77C	BSRI PROC. NO. BT-1 REV. 1
CODE/WELD CLASS ANSI/ASME B 31.3 S/C	PRESSURIZING MEDIUM ARGON	PIPE DIA 6" / MATL TYPE S/S	TEMP: MATL 53°F
NUMBER OF WELDS TESTED: 2	NUMBER OF MECHANICAL JOINTS TESTED: 0	NUMBER OF LEAKS DETECTED: 0	GAGE M&TE NO. CDS4101 DUE DATE: 3/20/95

PART OR WELD NUMBER	DISPOSITION ACC	DISPOSITION REJ	REMARKS
FW 2-C-1	✓		
FW 3	✓		

SKETCH:

NOTES: USED CONTACT THERM. CH 2/20/95	EXAMINER [signature] LEVEL II	DATE 2/20/95
	INTERPRETER [signature] LEVEL II	DATE 2/20/95
	WITNESSED BY/REVIEWED BY N/A	DATE

CH 2/20/95

MQS NDE-018-LT
Rev. 1 5/94 BSRI

W.P. PG. 89 OF 124

Exhibit 1

SRS	**NONDESTRUCTIVE EXAMINATION REPORT BUBBLE LEAK TESTING**		REPORT NUMBER N/A
IR NO. N/A			PROJECT NUMBER 1780 (m)
AREA LATE WASH- S	WORK PACKAGE NO. 1780-LWM-~~209~~ 2013-P-005 PWJ 5/3/95	TEST PRESSURE 20 PSIG	DATE 5/3/95
ISO NO./DWG See Remarks	LINE NO./PART ID See Remarks	BUBBLE SOLUTION TYPE 277C	BSRI PROC. NO. BT-1 Rev. 1
CODE/WELD CLASS ASME/ANSI B31.3 Severe Cyclic	PRESSURIZING MEDIUM ARGON	PIPE DIA 6" / MATL TYPE SS	TEMP: MATL 65°F
NUMBER OF WELDS TESTED: 8	NUMBER OF MECHANICAL JOINTS TESTED: N/A	NUMBER OF LEAKS DETECTED: 0	GAGE M&TE NO. 082 DUE DATE: 7/12/~~95~~ 95 PWJ 5/3/95

PART OR WELD NUMBER	DISPOSITION ACC	DISPOSITION REJ	REMARKS
FW5	X		NOZZLE WELD, PEN#2508, P-PI-S-0082 Rev. 0
FW18	X		KICK PLATE ATTACHMENT WELD, PEN#2508, P-PI-S-0082 R/0
FW10	X		NOZZLE WELD, PEN# 2480, P-PI-S-0082 Rev. 0
FW19	X		KICK PLATE ATTACHMENT WELD, PEN# 2480, P-PI-S-0082 R/0
FW4	X		NOZZLE WELD, PEN# 2506, P-PI-S-0081 Rev. 0
FW17	X		KICK PLATE ATTACHMENT WELD, PEN# 2506, P-PI-S-0081 R/0
FW1	X		NOZZLE WELD, PEN# 2478, P-PI-S-0081 Rev. 0
FW16	X		KICK PLATE ATTACHMENT WELD, PEN# 2478, P-PI-S-0081 R/0

SKETCH:

NOTES: TEMP. VERIFIED BY CONTACT THERMOMETER. CHS 5/3/95	EXAMINER	LEVEL II	DATE 5/3/95
	INTERPRETER	LEVEL II	DATE 5/3/95
	WITNESSED BY/REVIEWED BY Peter Kly		DATE 5/3/95

PAGE 10 OF 81

W.P PG. 90 OF 124

Exhibit 1

SRS	NONDESTRUCTIVE EXAMINATION REPORT BUBBLE LEAK TESTING		REPORT NUMBER
IR NO. N/A			PROJECT NUMBER 5-1780
AREA 5-LATE WASH	WORK PACKAGE NO. 1780-LWM-2013-P005	TEST PRESSURE 21 PSIG	DATE 5/9/95
ISO NO./DWG P-PI-5-0090/0	LINE NO./PART ID Nozzlet Kick Plate welds Pen. 938 and Pen 2509	BUBBLE SOLUTION TYPE LEAK TEC 277C	BSRI PROC. NO. BT-1 REV. 1
CODE/WELD CLASS ANSI/ASME B31.3 (SA)	PRESSURIZING MEDIUM ARGON	PIPE DIA 3" / MATL TYPE S/S	TEMP: MATL 75°F
NUMBER OF WELDS TESTED: 4	NUMBER OF MECHANICAL JOINTS TESTED: 0	NUMBER OF LEAKS DETECTED: 0	GAGE M&TE NO. CPS 082 DUE DATE: 7/12/95

PART OR WELD NUMBER	DISPOSITION ACC	DISPOSITION REJ	REMARKS
FW 11	X		Pen 938 Nozzle weld
FW 15	X		Pen 2509 Nozzle weld
FW 14	X		Pen 2509 Kick Plate weld
FW 20	X		Pen 938 Kick Plate weld

SKETCH:

NOTES: USED THERM. CPS 2190 DNE 9/8/95 CH 5/9/95	EXAMINER	LEVEL II	DATE 5/9/95
	INTERPRETER	LEVEL II	DATE 5/9/95
	WITNESSED BY/REVIEWED BY N/A		DATE

MQS NDE-018-LT
Rev. 1 5/94 BSRI

W.P. PG. 91 OF 124

Exhibit 1

SRS	NONDESTRUCTIVE EXAMINATION REPORT BUBBLE LEAK TESTING		REPORT NUMBER
IR NO. N/A			PROJECT NUMBER 1780
AREA S LATE WASH	WORK PACKAGE NO. 1780-2WM-2013-P005	TEST PRESSURE 21 PSIG	DATE 2/28/95
ISO NO./DWG P.PI.S-0082/0	LINE NO./PART ID PCP57	BUBBLE SOLUTION TYPE LEAK TEC 277C	BSRI PROC. NO. BT-1 REV. 1
CODE/WELD CLASS ANSI/ASME B 31.3	PRESSURIZING MEDIUM ARGON	PIPE DIA 6" / MATL TYPE S/S	TEMP: MATL 55 °F
NUMBER OF WELDS TESTED: 2	NUMBER OF MECHANICAL JOINTS TESTED: 0	NUMBER OF LEAKS DETECTED: 0	GAGE M&TE NO. CDS 4101 DUE DATE: 3/24/95

PART OR WELD NUMBER	DISPOSITION ACC	DISPOSITION REJ	REMARKS
FW6	✓		
FW9	✓		

SKETCH:

NOTES: USED CONTACT THERMOMETER CH 2/28/95	EXAMINER LEVEL II	DATE 2/28/95
	INTERPRETER LEVEL II	DATE 2/28/95
	WITNESSED BY/REVIEWED BY N/A	DATE

W.P PG. 92 OF 124

Exhibit 1

NONDESTRUCTIVE EXAMINATION REPORT
BUBBLE LEAK TESTING

SRS			REPORT NUMBER
IR NO. N/A			PROJECT NUMBER 1780
AREA LATE WASH	WORK PACKAGE NO. 1780-LWM-2013-P-005	TEST PRESSURE 21 PSIG	DATE 02/22/95
ISO NO./DWG P-PI-S-0082 R10	LINE NO./PART ID LINE # PCP57-6"	BUBBLE SOLUTION LEAK TEC TYPE 277C	BSRI PROC. NO. BT-1 R11
CODE/WELD CLASS ASME IAW SI B31.3 SEVERE CYCLIC	PRESSURIZING MEDIUM ARGON	PIPE DIA 6" / MATL TYPE SS	TEMP: MATL 50°F
NUMBER OF WELDS TESTED: 2	NUMBER OF MECHANICAL JOINTS TESTED: N/A	NUMBER OF LEAKS DETECTED: 0	GAGE M&TE NO. CDS 4101 DUE DATE: 3/20/95

PART OR WELD NUMBER	DISPOSITION ACC	DISPOSITION REJ	REMARKS
FW7	✓		
FW8	✓		

SKETCH:

NOTES: CONTACT THERMOMETER UTILIZED	EXAMINER [signature]	LEVEL II	DATE 02/22/95
[signature] 2/22/95	INTERPRETER [signature]	LEVEL II	DATE 02/22/95
	WITNESSED BY/REVIEWED BY N/A		DATE N/A

PAGE 76 OF 124

Exhibit 1

SRS	NONDESTRUCTIVE EXAMINATION REPORT BUBBLE LEAK TESTING		REPORT NUMBER
IR NO. N/A			PROJECT NUMBER 1780
AREA 5 LATE WASH	WORK PACKAGE NO. 1780-LWM-2013-P005	TEST PRESSURE 21 PSIG.	DATE 2/15/95
ISO NO./DWG P.PI.S-0090/0	LINE NO./PART ID PCP 70	BUBBLE SOLUTION LEAKTEC TYPE 277L	BSRI PROC. NO. BT-1 REV. 1
CODE/WELD CLASS ANSI B 31.3 S/C	PRESSURIZING MEDIUM NITROGEN	PIPE DIA 3 IN. / MATL TYPE S/S	TEMP: MATL 50°F
NUMBER OF WELDS TESTED: 2	NUMBER OF MECHANICAL JOINTS TESTED: 0	NUMBER OF LEAKS DETECTED: 0	GAGE M&TE NO. CDS 4101 DUE DATE: 3/20/95

PART OR WELD NUMBER	DISPOSITION ACC	DISPOSITION REJ	REMARKS
FW 12	X		
FW 13	X		

NOTES: USED CONTACT THERM. CN 2/15/95	EXAMINER LEVEL II	DATE 2/15/95
	INTERPRETER LEVEL II	DATE 2/15/95
	WITNESSED BY/REVIEWED BY N/A	DATE

MQS NDE-018-LT
Rev. 1 5/94 BSRI

W.P. PG. 94 OF 124

Exhibit 1

SRS	**NONDESTRUCTIVE EXAMINATION REPORT BUBBLE LEAK TESTING**		REPORT NUMBER
IR NO. N/A			PROJECT NUMBER 1780
AREA LATE WASH	WORK PACKAGE NO. 1780-LWM-2013-P005	TEST PRESSURE 21 PSIG	DATE 4/24/95
ISO NO./DWG P-PI-S-0090/0	LINE NO./PART ID PCP70	BUBBLE SOLUTION TYPE LEAK TEC 277C	BSRI PROC. NO. BT-1 REV. 1
CODE/WELD CLASS ANSI/ASME B31.3 3/6	PRESSURIZING MEDIUM ARGON	PIPE DIA 3 " / MATL TYPE S.S.	TEMP: MATL 60°F
NUMBER OF WELDS TESTED: 2	NUMBER OF MECHANICAL JOINTS TESTED: 0	NUMBER OF LEAKS DETECTED: 0	GAGE M&TE NO. 205 082 DUE DATE: 7/12/95

PART OR WELD NUMBER	DISPOSITION ACC	DISPOSITION REJ	REMARKS
FW21	X		
FW22	X		

SKETCH:

NOTES: USED CONTACT THERMOMETER CH 4/24/95	EXAMINER LEVEL II	DATE 4/24/95
	INTERPRETER LEVEL II	DATE 4/24/95
	WITNESSED BY/REVIEWED BY N/A	DATE

PG 78 OF 84

W.P. PG. 95 OF 124

Exhibit 1

SRS	**NONDESTRUCTIVE EXAMINATION REPORT BUBBLE LEAK TESTING**		REPORT NUMBER N/A
IR NO. N/A			PROJECT NUMBER 1780
AREA LATE WASH	WORK PACKAGE NO. 1780-LWM-2013-P005	TEST PRESSURE 21 PSIG	DATE 4/25/95
ISO NO./DWG P-PI-S-0090/0	LINE NO./PART ID PCP 70	BUBBLE SOLUTION TYPE LEAK TEC 277C	BSRI PROC. NO. BT-1 REV. 1
CODE/WELD CLASS ANSI/ASME B31.3 S/C	PRESSURIZING MEDIUM ARGON	PIPE DIA 3" / MATL TYPE S.S.	TEMP: MATL 65°F
NUMBER OF WELDS TESTED: 2	NUMBER OF MECHANICAL JOINTS TESTED: 0	NUMBER OF LEAKS DETECTED: 0	GAGE M&TE NO. CDS 082 DUE DATE: 7/12/95

PART OR WELD NUMBER	DISPOSITION ACC	DISPOSITION REJ	REMARKS
FW21R1	X		
FW22RS	X		

SKETCH:

NOTES: USED CONTACT THERMOMETER	EXAMINER [signature] LEVEL II	DATE 4/25/95
	INTERPRETER [signature] LEVEL II	DATE 4/25/95
	WITNESSED BY/REVIEWED BY N/A	DATE

MQS NDE-018-LT
Rev. 1 5/94 BSRI

W.P. PG 96 OF 124

Exhibit 1

SRS IR NO. N/A	NONDESTRUCTIVE EXAMINATION REPORT VACUUM BOX LEAK TESTING		REPORT NUMBER PROJECT NUMBER 1780
AREA 5 LATE WASH	WORK PACKAGE NO. 1780-LWM-Z013-P-005	TEST VACUUM PSI/Hg 5" HG	DATE 2/22/95
ISO NO./DWG P-PI-5-0090	LINE NO./PART ID LINE PCP 70 - 6" JACKET	BUBBLE SOLUTION LEAK TEC TYPE 277C	BSRI PROC. NO. BT-1 R1
CODE/WELD CLASS ASME/ANSI B31.3	GAGE M&TE NO. CDS 4457 DUE DATE 3/14/95	PIPE DIA 6" MATL TYPE C/S	TEMP: MATL 45°F
NUMBER OF WELDS TESTED 9	NUMBER OF LEAKS DETECTED 0	TYPE VACUUM PUMP USED VARIAN SD-200	

PART OR WELD NUMBER	DISPOSITION ACC	DISPOSITION REJ	REMARKS
FW-52	✓		
FW-53	✓		
FW-54	✓		
FW-68	✓		
FW-30	✓		
FW-55	✓		
FW-56	✓		
FW-69	✓		
FW-31	✓		

SKETCH

NOTES: DIG THERMO CDS 3629 6/19/95 EBE 2/22/95	EXAMINER EBEdmunds	LEVEL II	DATE 2-22-95
	INTERPRETER EBEdmunds	LEVEL II	DATE 2-22-95
	WITNESSED BY		DATE

MOS-NDE-024
Rev. 2 5/94 BSRI

W.P. PG. 97 OF 124

Exhibit 1

SRS	NONDESTRUCTIVE EXAMINATION REPORT VACUUM BOX LEAK TESTING		REPORT NUMBER
IR NO. N/A			PROJECT NUMBER 1780
AREA S-LATE WASH	WORK PACKAGE NO. 1780-LWM-2013-P005	TEST VACUUM PSI/Hg 6 ~~PSI/G~~ CH 2/23/95 IN. HG	DATE 2/23/~~94~~ 95
ISO NO./DWG P-PI-S-0090/0	LINE NO./PART ID PCP-70	BUBBLE SOLUTION TYPE LEAKTEC 2770	BSRI PROC. NO. LT-VB REV. 4
CODE/WELD CLASS ANSI/ASME B31.3	GAGE M&TE NO. 396 DUE DATE:	PIPE DIA 6" / MATL TYPE ~~SS~~ CS CH 2/23/95	TEMP: MATL 60°F
NUMBER OF WELDS TESTED 1	NUMBER OF LEAKS DETECTED: 0	TYPE VACUUM PUMP USED VARIAN SD-200	

PART OR WELD NUMBER	DISPOSITION ACC	DISPOSITION REJ	REMARKS
FW57	X		

SKETCH:

NOTES:	EXAMINER LEVEL	DATE
USED CONTACT THERMOMETER CH 2/23/95	[signature] II	2/23/95
	INTERPRETER LEVEL [signature] II	2/23/95
	WITNESSED BY	DATE

MQS-NDE-024
Rev. 2 5/94 BSRI

Exhibit 1

SRS IR NO. N/A	NONDESTRUCTIVE EXAMINATION REPORT VACUUM BOX LEAK TESTING		REPORT NUMBER N/A PROJECT NUMBER 1780(M)
AREA 5 LATE WASH	WORK PACKAGE NO. 1780-LINM-2013-P-005	TEST VACUUM PSI/Hg 5"	DATE 3-1-95
ISO NO./DWG P-PI-S-0082 %	LINE NO./PART ID 10" JACKET	BUBBLE SOLUTION LEAK TEC TYPE 377C	BSRI PROC. NO. BT-1 R1
CODE/WELD CLASS ASME/ANSI B31.3	GAGE M&TE NO. CDS 396 DUE DATE: 4-18-95	PIPE DIA 10" / MATL TYPE C/S	TEMP: MATL 50°F
NUMBER OF WELDS TESTED: 10	NUMBER OF LEAKS DETECTED: 0	TYPE VACUUM PUMP USED VARIAN SD-200	

PART OR WELD NUMBER	DISPOSITION ACC	DISPOSITION REJ	REMARKS
FW-28	✓		
FW-38	✓		
FW-39	✓		
FW-40	✓		
FW-66	✓		
FW-29	✓		
FW-49	✓		
FW-50	✓		
FW-51	✓		
FW-67	✓		

SKETCH:

NOTES:	EXAMINER	LEVEL	DATE
DIG THERMO CDS 2629 6-19-95	E B Edmunds	II	3-1-95
	INTERPRETER	LEVEL	DATE
	E B Edmunds	II	3-1-95
	WITNESSED BY		DATE
	N/A		

MQS-NDE-024
Rev. 2 5/94 BSRI

Exhibit 1

SRS / IR NO. N/A	NONDESTRUCTIVE EXAMINATION REPORT VACUUM BOX LEAK TESTING		REPORT NUMBER / PROJECT NUMBER 1780
AREA: LATE WASH	WORK PACKAGE NO. 1780 - LWM-2013-P 005	TEST VACUUM PSI/Hg: 5" Hg	DATE: 02/22/95
ISO NO./DWG: P-PI-S-0081 R10	LINE NO./PART ID: LTWE PCP 54-10"	BUBBLE SOLUTION: LEAK TEL TYPE: 277C	BSRI PROC. NO.: BT-1 R11
CODE/WELD CLASS: ASME/ANSI B31.3	GAGE M&TE NO.: CDS 4451 DUE DATE: 3/14/95	PIPE DIA: 10" / MATL TYPE: C/S	TEMP: MATL 50°F
NUMBER OF WELDS TESTED: 5	NUMBER OF LEAKS DETECTED: 0	TYPE VACUUM PUMP USED: VARIAN SD-200	

PART OR WELD NUMBER	DISPOSITION ACC	DISPOSITION REJ	REMARKS
FW27	✓		
FW35	✓		
FW36	✓		
FW37	✓		
FW65	✓		

SKETCH:

NOTES: CONTACT THERMOMETER USED [illegible] 2/22/95	EXAMINER [illegible]	LEVEL II	DATE 2/22/95
	INTERPRETER [illegible]	LEVEL II	DATE 2/22/95
	WITNESSED BY [illegible]		DATE 2/22/95

MOS-NDE-024
Rev. 2 5/94 BSRI

Exhibit 1

SRS IR NO. N/A	NONDESTRUCTIVE EXAMINATION REPORT VACUUM BOX LEAK TESTING		REPORT NUMBER PROJECT NUMBER 1780
AREA 5 LATE WASH	WORK PACKAGE NO. 1780-LWM-E013-P-005	TEST VACUUM PSI/Hg 5" HG	DATE 2/22/95
ISO NO./DWG P-PI-S-0081 R/0	LINE NO./PART ID 10" JACKET	BUBBLE SOLUTION LEAK TEC TYPE 277C	BSRI PROC. NO. BT-1 R/1
CODE/WELD CLASS ASME/ANSI B31.3	GAGE M&TE NO. CDS 4457 DUE DATE: 3/14/95	PIPE DIA 10" / MATL TYPE C/S	TEMP: MATL 45°F
NUMBER OF WELDS TESTED: 5	NUMBER OF LEAKS DETECTED: 0	TYPE VACUUM PUMP USED VARIAN SD-200	

PART OR WELD NUMBER	DISPOSITION ACC	DISPOSITION REJ	REMARKS
FW 26	✓		
FW 32	✓		
FW 33	✓		
FW 34	✓		
FW 64	✓		

SKETCH:

NOTES:	EXAMINER	LEVEL	DATE
QIA THERMO CDS 2629 6/19/95 EBE 2/22/95	EBEdmunds	II	2-22-95
	INTERPRETER EBEdmunds	LEVEL II	DATE 2-22-95
	WITNESSED BY		DATE

MQS-NDE-024
Rev. 2 5/94 BSRI

File ID CMP 03-6.10-3
Page 1 Of 1

Leak Test Data Sheet

WP Page ____ of ____

1. CMP 03-6.10, Rev. 2 PCW 3	2. Work Package No. L2016
3. Design Class PS	4. Prepared by Jim Palinshock

5. Scope of Work/Item to be Tested:

PPI-S-0081 Rev B, M-PSI-S-00001 R/P
CORE 5,6,25,26

6. Type of Test/Pressure: Hydro ✓ Pneumatic ____ Other ____

7. Test Medium: Water ✓ Other ____

8. Test Pressure Tolerance: -0% +10% Actual Test Pressure: 200 Test Temperature: 60

9. Test Duration: 10 Min. ✓ 30 Min. ____ Other ____

10. M&TE Equipment No: 2932 Calibration Due Date 3/22/95

11. Prehydro Walkdown Complete/Accepted and Ready for Test: [signature] 1/3/95

12.

Remarks/Specific Records	Requirements/References	Criteria/Supplementary
PPI-S-0081 Rev B		

13. Acceptable No Leakage ✓ Acceptable Allowable Leakage ____

13a. Verify restoration of test boundary and lay up requirements are complete.

CDE (signature) [signature] Date 1/3/95

14. Examinations completed for all required attributes

CDE (signature) [signature] Date 1/3/95

15. Inspections completed for all required attributes

CDE (signature) [signature] Date 1/23/95

W/P# L2016 Page 1 of 6 95

File ID CMP 03-6.10-3
Page 1 Of 1

Leak Test Data Sheet

WP Page ____ of ____

1. CMP 03-6.10, Rev. 2PCW3	2. Work Package No. L2016
3. Design Class PS	4. Prepared by Jim Polushock

5. Scope of Work/Item to be Tested:

PPI-S0081 REV B - M PSI-S-00001 R/1
JOCKET. 7, 8, 9, 10, 16, 17, 20, 21, 22, 23, 24

6. Type of Test/Pressure: Hydro ✓ Pneumatic ____ Other ____

7. Test Medium: Water ✓ Other ____

8. Test Pressure Tolerance: -0 [illegible] Actual Test Pressure: 60 Test Temperature: 60

9. Test Duration: 10 Min. ✓ 30 Min. ____ Other ____

10. M&TE Equipment No: 24HB Calibration Due Date 1/25/95

11. Prehydro Walkdown Complete/Accepted and Ready for Test: [signature] 1/10/95

12.

Remarks/Specific Records	Requirements/References	Criteria/Supplementary
	PPI-S0081 REV B	

13. Acceptable No Leakage ✓ Acceptable Allowable Leakage ____

13a. Verify restoration of test boundary and lay up requirements are complete.

CDE (signature) [signature] Date 1/10/95

14. Examinations completed for all required attributes

CDE (signature) [signature] Date 1/10/95

15. Inspections completed for all required attributes

CDE (signature) [signature] Date 1/23/95

Page 10 of 40

W/P # L2016

File ID CMP 03-6.10-3
Page 1 Of 1

Leak Test Data Sheet

WP Page ____ of ____

1. CMP03-6.10, Rev. 2 Pcn 3	2. Work Package No. L2016
3. Design Class PS	4. Prepared by LARRY MARTIN

5. Scope of Work/Item to be Tested: P-P1-S-0081 R/B CORE
M-PS1-S-00001 R/1
W 1,2,3,4 CORE

6. Type of Test/Pressure: Hydro X Pneumatic ____ Other ____

7. Test Medium: Water X Other ____

8. Test Pressure Tolerance: -0 +10% Actual Test Pressure: 205 Test Temperature: 60

9. Test Duration: 10 Min. X 30 Min. ____ Other ____

10. M&TE Equipment No: CDS 2923 Calibration Due Date 3-22-95

11. Prehydro Walkdown Complete/Accepted and Ready for Test: Larry Martin

12.

Remarks/Specific Records	Requirements/References	Criteria/Supplementary
P-P1-S-0081 R/B		

13. Acceptable No Leakage X Acceptable Allowable Leakage ____

13a. Verify restoration of test boundary and by-up requirements are complete.

CDE (signature) Larry Martin Date 1-11-95

14. Examinations completed for all required attributes

CDE (signature) Larry Martin Date 1-11-95

15. Inspections completed for all required attributes

CDE (signature) Larry Martin Date 1-23-95

W/P # L2016

File ID CMP 03-6.10-3
Page 1 Of 1

Leak Test Data Sheet

WP Page 1 of ___

1. CMP 03-6.10, Rev. 2 Pcn 3	2. Work Package No. L2016
3. Design Class PS	4. Prepared by Jim Palushock

5. Scope of Work/Item to be Tested:

Hydro welds on P.D1.S.0081 Rev B
M.PS1.S.00001 R/1 Core welds. 11, 18, 14, 12, 19, 15, 13

6. Type of Test/Pressure: Hydro ✓ Pneumatic ___ Other ___

7. Test Medium: Water ✓ Other ___

8. Test Pressure Tolerance: -0 +10% Actual Test Pressure: 2.0 Test Temperature: 60

9. Test Duration: 10 Min. ✓ 30 Min. ___ Other ___

10. M&TE Equipment No: RDS-2923 Calibration Due Date 3/22/95

11. Prehydro Walkdown Complete/Accepted and Ready for Test: [signature] 12/27/94

12.

Remarks/Specific Records	Requirements/References	Criteria/Supplementary
	P.D1.S.0081 Rev B	
	M.PS1.S.00001 Rev 1	Item 18

13. Acceptable No Leakage ✓ Acceptable Allowable Leakage ___

13a. Verify restoration of test boundary and lay up requirements are complete.
CDE (signature) [signature] Date 12/27/94

14. Examinations completed for all required attributes
CDE (signature) [signature] Date 12/27/94

15. Inspections completed for all required attributes
CDE (signature) [signature] Date 1/23/95

W/P # L2016 page 1 of 1

File ID CMP 03-6.10-3
Page 1 Of 1

Leak Test Data Sheet

WP Page 1 of ___

1. CMP03-6.10, Rev. 2 PCN3	2. Work Package No. L2016
3. Design Class PS	4. Prepared by Jim Palushock

5. Scope of Work/Item to be Tested: 12/27/94
P-P1-PS 0082 Rev B, M PS1.S.00001 R1
WELDS 7,8,9 CORE PIPE

6. Type of Test/Pressure: Hydro ✓ Pneumatic ___ Other ___

7. Test Medium: Water ✓ Other ___

8. Test Pressure Tolerance: 0+10% Actual Test Pressure: 2.10 Test Temperature: 60

9. Test Duration: 10 Min. ✓ 30 Min. ___ Other ___

10. M&TE Equipment No: 2923 Calibration Due Date 3/22/95

11. Prehydro Walkdown Complete/Accepted and Ready for Test: [signature] 12/27/94

12.

Remarks/Specific Records	Requirements/References	Criteria/Supplementary
	P.P1.S.0082 Rev B	
	M-PS1.S.00001 Rev 1	ITEM 18

13. Acceptable No Leakage ✓ Acceptable Allowable Leakage ___

13a. Verify restoration of test boundary and lay up requirements are complete.
CDE (signature) [signature] Date 12/27/94

14. Examinations completed for all required attributes
CDE (signature) [signature] Date 12/27/94

15. Inspections completed for all required attributes
CDE (signature) [signature] Date 1/23/95

W/P # L2016 page 1 of 2

File ID CMP 03-6.10-3
Page 1 Of 1

Leak Test Data Sheet

WP Page ____ of ____

1. CMP03-6.10, Rev. 2 PLN 3	2. Work Package No. L2016
3. Design Class PS	4. Prepared by Jim Polushock

5. Scope of Work/Item to be Tested:

P-P1-S-0082 Rev B M-PS1-S-00001 R1

JACKET WELD 3.4.5L

6. Type of Test/Pressure: Hydro ✓ Pneumatic ____ Other ____

7. Test Medium: Water ✓ Other ____

8. Test Pressure Tolerance: -0 +10% Actual Test Pressure: 60 Test Temperature: 60

9. Test Duration: 10 Min. ✓ 30 Min. ____ Other ____

10. M&TE Equipment No: 2481 Calibration Due Date 1/25/95

11. Prehydro Walkdown Complete/Accepted and Ready for Test: [signature] 1/10/95

12.

Remarks/Specific Records	Requirements/References	Criteria/Supplementary
	P-P1-S0082 Rev B	

13. Acceptable No Leakage ✓ Acceptable Allowable Leakage ____

13a. Verify restoration of test boundary and lay up requirements are complete.

CDE (signature) [signature] Date 1/10/95

14. Examinations completed for all required attributes

CDE (signature) [signature] Date 1/10/95

15. Inspections completed for all required attributes

CDE (signature) [signature] Date 1/25/95

W/P # L2016 page 20 of 80

File ID CMP 03-6.10-3
Page 1 Of 1

Leak Test Data Sheet

WP Page ____ of ____

1. CMP 03-6.10, Rev. 2PCW3	2. Work Package No. L2016
3. Design Class PS	4. Prepared by Jim Palushock

5. Scope of Work/Item to be Tested:

P-P1-S-0082 Rev B. M-PS1-S-00001 R/1
JACKET WELDS 13.14.15.16

6. Type of Test/Pressure: Hydro ✓ Pneumatic ____ Other ____

7. Test Medium: Water ✓ Other ____

8. Test Pressure Tolerance: -0-+10% Actual Test Pressure: 60 Test Temperature: 60

9. Test Duration: 10 Min. ✓ 30 Min. ____ Other ____

10. M&TE Equipment No: 2488 Calibration Due Date 1/25/95

11. Prehydro Walkdown Complete/Accepted and Ready for Test: [signature] 1/10/95

12.

Remarks/Specific Records	Requirements/References	Criteria/Supplementary
	P-P1-S-0082 Rev B	

13. Acceptable No Leakage ✓	Acceptable Allowable Leakage ____

13a. Verify restoration of test boundary and lay up requirements are complete.

CDE (signature) [signature] Date 1/10/95

14. Examinations completed for all required attributes

CDE (signature) [signature] Date 1/10/95

15. Inspections completed for all required attributes

CDE (signature) [signature] Date 1/23/95

WP#L2016 Page 2 of 10

File ID CMP 03-6.10-3
Page 1 Of 1

Leak Test Data Sheet

WP Page ____ of ____

1. CMP03-6.10, Rev. 2 PLN 3	2. Work Package No. L 2016
3. Design Class PS	4. Prepared by LARRY MARTIN

5. Scope of Work/Item to be Tested: P-P1-S-0082 R/B
M-PS1-S-00001 R/1
WELDS 1&2 CODE

6. Type of Test/Pressure: Hydro X Pneumatic ____ Other ____

7. Test Medium: Water X Other ____

8. Test Pressure Tolerance: [illegible] Actual Test Pressure: [illegible]

9. Test Duration: 10 Min. X 30 Min. ____ Other ____

10. M&TE Equipment No: CDS 2923 Calibration Due Date 3-22-95

11. Prehydro Walkdown Complete/Accepted and Ready for Test: Larry Martin

12.

Remarks/Specific Records	Requirements/References	Criteria/Supplementary
P-P1-S-0082 R/B		

13. Acceptable No Leakage X Acceptable Allowable Leakage ____

13a. Verify restoration of test boundary and lay up requirements are complete.
CDE (signature) Larry Martin Date 12-22-94

14. Examinations completed for all required attributes
CDE (signature) Larry Martin Date 12-22-94

15. Inspections completed for all required attributes
CDE (signature) Larry Martin Date 1-23-95

W/P # L 2016 Page [illegible]

Leak Test Data Sheet

WP Page ____ of ____

1. CMP03-6.10, Rev. 2 Pen 3	2. Work Package No. L2016
3. Design Class PS	4. Prepared by LARRY MARTIN

5. Scope of Work/Item to be Tested: P-P1-S-0082 R/B
M-PS1-S-00001 R/B
WELDS 10, 11 + 12 BOLTS

6. Type of Test/Pressure: Hydro X Pneumatic ____ Other ____

7. Test Medium: Water X Other ____

8. Test Pressure Tolerance: -0 +10% Actual Test Pressure: [illegible]

9. Test Duration: 10 Min. X 30 Min. ____ Other ____

10. M&TE Equipment No: CDS 2923 Calibration Due Date 3-22-95

11. Prehydro Walkdown Complete/Accepted and Ready for Test: Larry Martin

12.

Remarks/Specific Records	Requirements/References	Criteria/Supplementary
P-P1-S-0082 R/B		

13. Acceptable No Leakage X	Acceptable Allowable Leakage ____

13a. Verify restoration of test boundary and lay up requirements are complete.
CDE (signature) Larry Martin Date 12-22-94

14. Examinations completed for all required attributes
CDE (signature) Larry Martin Date 12-22-94

15. Inspections completed for all required attributes
CDE (signature) Larry Martin Date 1-23-95

W/P + cover page

File ID CMP 03-6.10-3
Page 1 Of 1

Leak Test Data Sheet

WP Page ____ of ____

1. CMP03-6.10, Rev. 2 Pcw 3	2. Work Package No. C2016
3. Design Class PS	4. Prepared by Jim Palushtock

5. Scope of Work/Item to be Tested:

PDI-S-0082 Rev B M-PSI-S-00001 R1
CORE W17,18

6. Type of Test/Pressure: Hydro ✓ Pneumatic ____ Other ____

7. Test Medium: Water ✓ Other ____

8. Test Pressure Tolerance: -0 +10% Actual Test Pressure: 200 Test Temperature: 60

9. Test Duration: 10 Min. ✓ 30 Min. ____ Other ____

10. M&TE Equipment No: 2923 Calibration Due Date 3/22/95

11. Prehydro Walkdown Complete/Accepted and Ready for Test: [signature] 12/29/94

12.

Remarks/Specific Records	Requirements/References	Criteria/Supplementary
	PDI-S-0082 Rev B	

13. Acceptable No Leakage ✓	Acceptable Allowable Leakage ____

13a. Verify restoration of test boundary and lay up requirements are complete.

CDE (signature) [signature] Date 12/29/94

14. Examinations completed for all required attributes

CDE (signature) [signature] Date 12/29/94

15. Inspections completed for all required attributes

CDE (signature) [signature] Date 1/23/95

WP # C2016 1 of 1

File ID CMP 03-6.10-3
Page 1 Of 1

Leak Test Data Sheet

WP Page ____ of ____

1. CMP03-6.10, Rev. 2PCN3	2. Work Package No. L2016
3. Design Class PS	4. Prepared by Jim Polishock

5. Scope of Work/Item to be Tested:

HYDRO CORE P.D1.S.0082 - m PS1.S.0000 (2/1
WELDS 19,20

6. Type of Test/Pressure: Hydro ✓ Pneumatic ____ Other ____

7. Test Medium: Water ✓ Other ____

8. Test Pressure Tolerance: -0 +10% Actual Test Pressure: 210 Test Temperature: 60

9. Test Duration: 10 Min. ✓ 30 Min. ____ Other ____

10. M&TE Equipment No: 2923 Calibration Due Date 3/22/95

11. Prehydro Walkdown Complete/Accepted and Ready for Test: [signature] 1/12/95

12.

Remarks/Specific Records	Requirements/References	Criteria/Supplementary
	P.D1.S.0082 Rev B	

13. Acceptable No Leakage ✓ Acceptable Allowable Leakage ____

13a. Verify restoration of test boundary and lay up requirements are complete.

CDE (signature) [signature] Date 1/12/95

14. Examinations completed for all required attributes

CDE (signature) [signature] Date 1/12/95

15. Inspections completed for all required attributes

CDE (signature) [signature] Date 1/23/95

File ID CMP 03-6.10-3
Page 1 Of 1

Leak Test Data Sheet

WP Page ____ of ____

1. CMP 03-6.10, Rev. 2PCW3	2. Work Package No. L2016
3. Design Class PS	4. Prepared by Jim Palushock

5. Scope of Work/Item to be Tested:

P.P1.S-0090 Rev B, m-PS1.S-0001 a/1
CORE WELDS 3.4.21.22

6. Type of Test/Pressure: Hydro ✓ Pneumatic ____ Other ____

7. Test Medium: Water ✓ Other ____

8. Test Pressure Tolerance: -0 +10% Actual Test Pressure: 200 Test Temperature: 60

9. Test Duration: 10 Min. ✓ 30 Min. ____ Other ____

10. M&TE Equipment No: 2923 Calibration Due Date 3/22/95

11. Prehydro Walkdown Complete/Accepted and Ready for Test: [signature] 1/5/95

12.

Remarks/Specific Records	Requirements/References	Criteria/Supplementary
	P.P1.S.0090 Rev B	

13. Acceptable No Leakage ✓ Acceptable Allowable Leakage ____

13a. Verify restoration of test boundary and lay up requirements are complete.

CDE (signature) [signature] Date 1/5/95

14. Examinations completed for all required attributes

CDE (signature) [signature] Date 1/5/95

15. Inspections completed for all required attributes

CDE (signature) [signature] Date 1/23/95

W/PA-L2016 page 2 / 06 95

File ID CMP 03-6.10-3
Page 1 Of 1

Leak Test Data Sheet

WP Page ____ of ____

1. CMP03-6.10, Rev. 2 Rev3	2. Work Package No. L2016
3. Design Class PS	4. Prepared by LARRY MARTIN

5. Scope of Work/Item to be Tested: P-P1-S-0090 R/B CORE
M-PS1-S-00001 R/1
WELDS 1+2

6. Type of Test/Pressure: Hydro X Pneumatic ____ Other ____

8. Test Pressure Tolerance: -0 +10% Actual Test Pressure: 210 Test Temperature: 60

9. Test Duration: 10 Min. X 30 Min. ____ Other ____

10. M&TE Equipment No: CDS 2923 Calibration Due Date 3-22-95

11. Prehydro Walkdown Complete/Accepted and Ready for Test: Larry Martin

12.

Remarks/Specific Records	Requirements/References	Criteria/Supplementary
P-P1-S-0090 R/B		

13. Acceptable No Leakage X	Acceptable Allowable Leakage ____

13a. Verify restoration of test boundary and lay up requirements are complete.

CDE (signature) Larry Martin Date 1-14-95

14. Examinations completed for all required attributes

CDE (signature) Larry Martin Date 1-14-95

15. Inspections completed for all required attributes

CDE (signature) Larry Martin Date 1-23-95

File ID CMP 03-6.10-3
Page 1 Of 1

Leak Test Data Sheet

WP Page ____ of ____

1. CMP03-6.10, Rev. 2 Plus 3	2. Work Package No. L 2016
3. Design Class PS	4. Prepared by LARRY MARTIN

5. Scope of Work/Item to be Tested: P-P1-S-0090 R/B JACKET
M-PS1-S-00001 R/1
WELDS 5,6,7,8,9,10,15,16,17,18,19

6. Type of Test/Pressure: Hydro X Pneumatic ____ Other ____

7. Test Medium: Water X Other ____

8. Test Pressure Tolerance: -0 +10% Actual Test Pressure: 53 Test Temperature: 60

9. Test Duration: 10 Min. X 30 Min. ____ Other ____

10. M&TE Equipment No: CDS 2488 Calibration Due Date 1-25-95

11. Prehydro Walkdown Complete/Accepted and Ready for Test: Larry Martin

12.

Remarks/Specific Records	Requirements/References	Criteria/Supplementary
P-P1-S-0090 R/B		

13. Acceptable No Leakage X	Acceptable Allowable Leakage ____

13a. Verify restoration of test boundary and lay up requirements are complete.

CDE (signature) Larry Martin Date 1-14-95

14. Examinations completed for all required attributes

CDE (signature) Larry Martin Date 1-14-95

15. Inspections completed for all required attributes

CDE (signature) Larry Martin Date 1-23-95

W/PAC 2016 page 1 of 2

Leak Test Data Sheet

WP Page ____ of ____

1. CMP03-6.10, Rev. 2 Rev 3	2. Work Package No. L2016
3. Design Class P3	4. Prepared by Jim Pishustock

5. Scope of Work/Item to be Tested:
P-P1-S-0090 Rev B
CORE WELDS 11, 12, 13, 14

6. Type of Test/Pressure: Hydro ✓ Pneumatic ____ Other ____

7. Test Medium: Water ✓ Other ____

8. Test Pressure Tolerance: -0% + 10% Actual Test Pressure: [illegible] Test Temperature: 68

9. Test Duration: 10 Min. ✓ 30 Min. ____ Other ____

10. M&TE Equipment No: 2323 Calibration Due Date 3/22/05

11. Prehydro Walkdown Complete/Accepted and Ready for Test: [signature] 12/28/04

12.

Remarks/Specific Records	Requirements/References	Criteria/Supplementary
	P-P1-S-0090 Rev B	
	M-P1-S-00001 Rev 1	Item 18

13. Acceptable No Leakage ✓ Acceptable Allowable Leakage ____

13a. Verify restoration of test boundary and lay up requirements are complete.
CDE (signature) [signature] Date 12/28/04

14. Examinations completed for all required attributes
CDE (signature) [signature] Date 12/28/04

15. Inspections completed for all required attributes
CDE (signature) [signature] Date 1/23/05

WIP#L2016 Page 30 of 40

Exhibit 1

SRS	NONDESTRUCTIVE EXAMINATION REPORT BUBBLE LEAK TESTING			REPORT NUMBER
IR NO. N/A				PROJECT NUMBER 1780
AREA C/S	WORK PACKAGE NO. L2063	TEST PRESSURE 21 PSIG		DATE 1/14/95
ISO NO./DWG M-M65-0019 R/1	LINE NO./PART ID P.P1-S-0090/B	BUBBLE SOLUTION TYPE LEAKTEC 277C		BSRI PROC. NO. BT-1 REV. 1
CODE/WELD CLASS B31.3 (P224) S/C	PRESSURIZING MEDIUM AIR	PIPE DIA 3	MATL TYPE S/S	TEMP: MATL 60°F
NUMBER OF WELDS TESTED: 2	NUMBER OF MECHANICAL JOINTS TESTED: 0	NUMBER OF LEAKS DETECTED: 0		GAGE M&TE NO. CD5082 DUE DATE: 3/21/95

PART OR WELD NUMBER	DISPOSITION ACC	DISPOSITION REJ	REMARKS
W2	✓		

SKETCH:

NOTES:	EXAMINER	LEVEL	DATE
	[signature]	#	1/14/95
	INTERPRETER	LEVEL	DATE
	[signature]	#	1/14/95
	WITNESSED BY/REVIEWED BY		DATE

MQS NDE-018-LT
Rev. 1 5/94 BSRI

W/P#L2 16 page 34 of 8

PAGE 3 OF 16

NIPA0016 [illegible]

Exhibit 1

SRS	NONDESTRUCTIVE EXAMINATION REPORT BUBBLE LEAK TESTING			REPORT NUMBER N/A
IR NO. N/A				PROJECT NUMBER 1780
AREA S	WORK PACKAGE NO. L2016	TEST PRESSURE 22 PSIG		DATE 1-05-95
ISO NO./DWG P-PI-S-0090 R/B	LINE NO./PART ID PCP 70	BUBBLE SOLUTION TYPE LEAK TEC 277C		BSRI PROC. NO. BT-1 R/1 1-5-95
CODE/WELD CLASS B31.3	PRESSURIZING MEDIUM PLANT AIR	PIPE DIA 3"	MATL TYPE S/S	TEMP: MATL 58°F
NUMBER OF WELDS TESTED: 4	NUMBER OF MECHANICAL JOINTS TESTED: 0	NUMBER OF LEAKS DETECTED: 0		GAGE M&TE NO. 4105 DUE DATE: 02-04-95

PART OR WELD NUMBER	DISPOSITION ACC	DISPOSITION REJ	REMARKS
W3	✓	N/A	N/A
W4		N/A	
W21	✓	N/A	N/A
W22	✓	N/A	N/A

SKETCH:

N/A

NOTES: DIGITAL THERMOMETER CDS NO 2750 CAL DUE DATE 4-7-95. TESTED PER DCF NO M-DCF-S-00443 OWD 1-5-95	EXAMINER O.W. Smithers	LEVEL II	DATE 1-5-95
	INTERPRETER O.W. Smithers	LEVEL II	DATE 1-5-95
	WITNESSED BY/REVIEWED BY N/A		DATE N/A

MQS NDE-018-LT
Rev. 1 5/94 BSRI

W/P L2016 page 35 of 8

PAGE 4 OF 16

Exhibit 1

SRS	NONDESTRUCTIVE EXAMINATION REPORT BUBBLE LEAK TESTING			REPORT NUMBER
IR NO. N/A				PROJECT NUMBER 1780
AREA S	WORK PACKAGE NO. S.O. # L2016	TEST PRESSURE		DATE 12/28/94
ISO NO./DWG P-PI-S-0090	LINE NO./PART ID LINE # PCP70	BUBBLE SOLUTION LEAK TEC TYPE 277C		BSRI PROC. NO. BT-1 R/1
CODE/WELD CLASS ASME/ANSI B31.3 SEVERE CYCLIC	PRESSURIZING MEDIUM PLANT AIR	PIPE DIA 3"	MATL TYPE S/S	TEMP: MATL 68°F
NUMBER OF WELDS TESTED: 4	NUMBER OF MECHANICAL JOINTS TESTED: 0	NUMBER OF LEAKS DETECTED: 4		GAGE M&TE NO. CDS 4105 DUE DATE: 02/04/95

PART OR WELD NUMBER	DISPOSITION ACC	DISPOSITION REJ	REMARKS
W11	✓		
W12	✓		
W13	✓		
W14	✓		

SKETCH:

NOTES: DIGITAL THERMOMETER CDS 2750 DUE 4/7/95 TEST PER DCF # M-DCF-S-00443 SW 12/28/94

EXAMINER	LEVEL	DATE
Scott M. Valdez	II	12/28/94
INTERPRETER	LEVEL	DATE
Scott M. Valdez	II	12/28/94
WITNESSED BY/REVIEWED BY		DATE
N/A		N/A

MQS NDE-018-LT
Rev. 1 5/94 BSRI

NP #L2016 page 36 of 82
PAGE 5 OF 16

Exhibit 1

SRS N/A	**NONDESTRUCTIVE EXAMINATION REPORT BUBBLE LEAK TESTING**		REPORT NUMBER N/A
IR NO. N/A			PROJECT NUMBER 1780
AREA 5	WORK PACKAGE NO. L201L	TEST PRESSURE 21 PSIG	DATE 12-22-94
ISO NO./DWG P-PI-S-0032 R/B	LINE NO./PART ID PCP57	BUBBLE SOLUTION TYPE LEAK TEC 277C	BSRI PROC. NO. BT-1 R/1
CODE/WELD CLASS B31.3	PRESSURIZING MEDIUM PLANT AIR	PIPE DIA 6" / MATL TYPE S/S	TEMP: MATL 58°F
NUMBER OF WELDS TESTED: 2	NUMBER OF MECHANICAL JOINTS TESTED: 0	NUMBER OF LEAKS DETECTED: 0	GAGE M&TE NO. 4105 DUE DATE: 02-04-95

PART OR WELD NUMBER	DISPOSITION ACC	DISPOSITION REJ	REMARKS
W1	✓	N/A	N/A
W2	✓	N/A	N/A

SKETCH:

N/A

NOTES: DIGITAL THERMOMETER CDS NO 2750 CAL DUE DATE 04-07-95 TESTED PER DCF NO M-DCF-S-00443 OWS 12-22-94

EXAMINER O.W. Smith	LEVEL II	DATE 12-22-94
INTERPRETER O.W. Smith	LEVEL II	DATE 12-22-94
WITNESSED BY/REVIEWED BY		DATE

PAGE 6 OF 17

MQS NDE-018-LT
Rev. 1 5/94 BSRI

Exhibit 1

NONDESTRUCTIVE EXAMINATION REPORT BUBBLE LEAK TESTING

SRS: N/A			REPORT NUMBER: N/A
IR NO.: N/A			PROJECT NUMBER: 1780
AREA: S	WORK PACKAGE NO.: L201L	TEST PRESSURE: 22.5 PSIG	DATE: 12-23-94
ISO NO./DWG: P-PI-S-0083 R/B	LINE NO./PART ID: PCP 57	BUBBLE SOLUTION TYPE: LEAK TEC 277C	BSRI PROC. NO.: BT-1 R11
CODE/WELD CLASS: B31.3	PRESSURIZING MEDIUM: PLANT AIR	PIPE DIA: 6" / MATL TYPE: S/S	TEMP: MATL 61°F
NUMBER OF WELDS TESTED: 3	NUMBER OF MECHANICAL JOINTS TESTED: 0	NUMBER OF LEAKS DETECTED: 0	GAGE M&TE NO. 4105 DUE DATE: 03-04-95

PART OR WELD NUMBER	DISPOSITION ACC	DISPOSITION REJ	REMARKS
W1	✓	N/A	N/A
W2	✓	N/A	N/A
W3	✓	N/A	N/A

SKETCH:

N/A

NOTES: DIGITAL THERMOMETER CDS NO 2750 CAL DUE DATE 04-07-95. TESTED PER DCR NO M-DCF S-00443 OWA 12-23-94

EXAMINER: O.W. Smith	LEVEL: II	DATE: 12-23-94
INTERPRETER: O.W. Smith	LEVEL: II	DATE: 12-23-94
WITNESSED BY/REVIEWED BY		DATE

MQS NDE-018-LT
Rev. 1 5/94 BSRI

PAGE 7 OF 17

Exhibit 1

NONDESTRUCTIVE EXAMINATION REPORT
BUBBLE LEAK TESTING

SRS: N/A			REPORT NUMBER: N/A
IR NO.: N/A			PROJECT NUMBER: 1780
AREA: S	WORK PACKAGE NO.: L2016	TEST PRESSURE: 21 PSIG	DATE: 12-22-94
ISO NO./DWG: P-PI-S-00032 R/B	LINE NO./PART ID: PCP 57	BUBBLE SOLUTION TYPE: LEAK TEC 277C	BSRI PROC. NO.: BT-1 R11
CODE/WELD CLASS: B31.3	PRESSURIZING MEDIUM: PLANT AIR	PIPE DIA: 6" / MATL TYPE: S/S	TEMP: MATL 65°F
NUMBER OF WELDS TESTED: 3	NUMBER OF MECHANICAL JOINTS TESTED: 0	NUMBER OF LEAKS DETECTED: 0	GAGE M&TE NO. 4105 / DUE DATE: 02-04-95

PART OR WELD NUMBER	DISPOSITION ACC	DISPOSITION REJ	REMARKS
W10		N/A	N/A
W11	✓	N/A	N/A
W12	✓	N/A	N/A

SKETCH:

N/A

NOTES: DIGITAL THERMOMETER CDS No 2750 CAL DUE DATE 04-07-95 TESTED PER DCF NO. M-DCF-S-00443 OWS 12-22-94

EXAMINER: O.W. Smith	LEVEL: II	DATE: 12-22-94
INTERPRETER: O.W. Smith	LEVEL: II	DATE: 12-22-94
WITNESSED BY/REVIEWED BY		DATE

MQS NDE-018-LT
Rev. 1 5/94 BSRI

PAGE 8 OF 17

Exhibit 1

NONDESTRUCTIVE EXAMINATION REPORT
BUBBLE LEAK TESTING

SRS			REPORT NUMBER
IR NO. N/A			PROJECT NUMBER 1780
AREA S	WORK PACKAGE NO. SO. L2016	TEST PRESSURE 20.5 PSIG	DATE 12/29/94
ISO NO./DWG P-PI-S-0082 R/D	LINE NO./PART ID LINE # PCP57-6"	BUBBLE SOLUTION LEAK TEC TYPE 277C	BSRI PROC. NO. BT-1 R/1
CODE/WELD CLASS ASME/ANSI B31.3 SEVERE CYCLIC	PRESSURIZING MEDIUM PLANT AIR	PIPE DIA 6" / MATL TYPE S/S	TEMP: MATL 65°F
NUMBER OF WELDS TESTED: 1	NUMBER OF MECHANICAL JOINTS TESTED: 0	NUMBER OF LEAKS DETECTED: 0	GAGE M&TE NO. CDS 4105 DUE DATE: 2/4/95

PART OR WELD NUMBER	DISPOSITION ACC	DISPOSITION REJ	REMARKS
W17	✓		
W18	✓		

SKETCH:

PAGE 9 OF 17

NOTES: DIGITAL THERMOMETER CDS 2750 DUE 4/7/95 TEST PER DCF #	EXAMINER [signature]	LEVEL II	DATE 12/29/94
	INTERPRETER [signature]	LEVEL II	DATE 12/29/94
	WITNESSED BY/REVIEWED BY N/A		DATE N/A

MQS NDE-018-LT
Rev. 1 5/94 BSRI

Exhibit 1

SRS	NONDESTRUCTIVE EXAMINATION REPORT BUBBLE LEAK TESTING		REPORT NUMBER
IR NO. N/A			PROJECT NUMBER 178D
AREA C/S	WORK PACKAGE NO. L02016	TEST PRESSURE 21 PSIG	DATE 1/12/95
ISO NO./DWG M-M6-S-0019 R1	LINE NO./PART ID R PI-S-0082 / B	BUBBLE SOLUTION TYPE LEAKTEC 277C	BSRI PROC. NO. BT-1 REV. 1
CODE/WELD CLASS B 31.3 (P22A) S/C	PRESSURIZING MEDIUM AIR	PIPE DIA 6" / MATL TYPE S/S	TEMP: MATL 60°F
NUMBER OF WELDS TESTED: 2	NUMBER OF MECHANICAL JOINTS TESTED: 0	NUMBER OF LEAKS DETECTED: 0	GAGE M&TE NO. CPS 4105 DUE DATE: 2/4/95

PART OR WELD NUMBER	DISPOSITION ACC	DISPOSITION REJ	REMARKS
W 19	✓		
W 2L	✓		

SKETCH:

PAGE 10 OF 17

NOTES:

EXAMINER [signature]	LEVEL II	DATE 1/12/95
INTERPRETER [signature]	LEVEL II	DATE 1/12/95
WITNESSED BY/REVIEWED BY N/A		DATE

Exhibit 1

SRS	**NONDESTRUCTIVE EXAMINATION REPORT BUBBLE LEAK TESTING**		REPORT NUMBER
IR NO. N/A			PROJECT NUMBER 1780
AREA C/S	WORK PACKAGE NO. L2016	TEST PRESSURE 21 PSIG	DATE 1/11/95
ISO NO./DWG M-M6-S-0019R1	LINE NO./PART ID RPI-S-0081/B	BUBBLE SOLUTION TYPE LEAKTEC 277C	BSRI PROC. NO. BT-1-REV.1
CODE/WELD CLASS B31.3 (P224) S/G	PRESSURIZING MEDIUM AIR	PIPE DIA 6" / MATL TYPE S/S	TEMP: MATL 60°F
NUMBER OF WELDS TESTED: 4	NUMBER OF MECHANICAL JOINTS TESTED: 0	NUMBER OF LEAKS DETECTED: 0	GAGE M&TE NO. CDS 4105 DUE DATE: 2/9/95

PART OR WELD NUMBER	DISPOSITION ACC	DISPOSITION REJ	REMARKS
W-1	X		
W-2	X		
W-3	X		
W-4	X		

SKETCH:

PAGE 5 OF 20

NOTES:

EXAMINER [signature]	LEVEL II	DATE 1/11/95
INTERPRETER [signature]	LEVEL II	DATE 1/11/95
WITNESSED BY/REVIEWED BY [signature]		DATE 1/11/95

MQS NDE-018-LT
Rev. 1 5/94 BSRI

Exhibit 1

SRS	**NONDESTRUCTIVE EXAMINATION REPORT BUBBLE LEAK TESTING**		REPORT NUMBER N/A
IR NO. N/A			PROJECT NUMBER 1780
AREA S	WORK PACKAGE NO. SMV 12/27/94 ~~L2012~~ L2016	TEST PRESSURE 21 PSIG	DATE 12/27/94
ISO NO./DWG R/B P-PI-S-0081	LINE NO./PART ID (PCP54) P-PI-S-0081	BUBBLE SOLUTION LEAK-TEC TYPE 277C	BSRI PROC. NO. BT-1 R/1
CODE/WELD CLASS B31.3	PRESSURIZING MEDIUM PLANT AIR	PIPE DIA 12/27/94 SMV ~~N/A~~ 6" / MATL TYPE S/S	TEMP: MATL 61°F
NUMBER OF WELDS TESTED: 7	NUMBER OF MECHANICAL JOINTS TESTED: 0	NUMBER OF LEAKS DETECTED: 0	GAGE M&TE NO. 4105 DUE DATE: 02-04-95

PART OR WELD NUMBER	DISPOSITION ACC	DISPOSITION REJ	REMARKS
W11, 12, 13	✓		
W14	✓		
W15	✓		
W18	✓		
W19	✓		

SKETCH:

NOTES: DIGITAL THERMOMETER EDS NO 2750 CAL DUE DATE 04-07-95 TESTED PER DCF NO M-DCF-S-00443 SMV 12/27/94	EXAMINER [signature] LEVEL II	DATE 12/27/94
	INTERPRETER [signature] LEVEL II	DATE 12/27/94
	WITNESSED BY/REVIEWED BY N/A	DATE N/A

MQS NDE-018-LT
Rev. 1 5/94 BSRI

PAGE 6 OF 20

Exhibit 1

SRS	NONDESTRUCTIVE EXAMINATION REPORT BUBBLE LEAK TESTING		REPORT NUMBER N/A
IR NO. N/A			PROJECT NUMBER 1780
AREA S	WORK PACKAGE NO. L2016	TEST PRESSURE 20.5 PSIG	DATE 1-3-95
ISO NO./DWG P-PI-S-0021 R/B	LINE NO./PART ID PCP54	BUBBLE SOLUTION TYPE LEAK-TEC 277C	BSRI PROC. NO. BT-1 R/1
CODE/WELD CLASS B31.3	PRESSURIZING MEDIUM PLANT AIR	PIPE DIA 6" / MATL TYPE S/S	TEMP: MATL 59°F
NUMBER OF WELDS TESTED: 4	NUMBER OF MECHANICAL JOINTS TESTED: 0	NUMBER OF LEAKS DETECTED:	GAGE M&TE NO. 4105 DUE DATE: 02-04-95

PART OR WELD NUMBER	DISPOSITION ACC	DISPOSITION REJ	REMARKS
W5	✓	N/A	N/A
W6	✓	N/A	N/A
W25	✓	N/A	N/A
W26	✓	N/A	N/A

SKETCH:

N/A

PAGE 7 OF 20

NOTES: DIGITAL THERMOMETER CDS NO 2750 CAL DUE DATE 04-07-95 TESTED PER DCF NO M-DCF-S-00443 OWD 1-3-95	EXAMINER O.W. Smith	LEVEL II	DATE 1-3-95
	INTERPRETER O.W. Smith	LEVEL II	DATE 1-3-95
	WITNESSED BY/REVIEWED BY		DATE

MQS NDE-018-LT
Rev. 1 5/94 BSRI

CELL LINER REPAIRS

- LIQUID PENETRANT EXAMINATIONS

Exhibit 1

WIR NUMBER	NONDESTRUCTIVE EXAMINATION REPORT LIQUID PENETRANT EXAMINATION			REPORT NUMBER
N/A				1780-LWM-202-M-003
JOB NUMBER 1780	NAME PENETRATIONS IN HOLD TK. CELL.			DATE 3/6/95
ISO NO./DWG C-CS-S-0054/0	LINE NO./PART ID PEN. 2502, PEN 2509	TIME OF EXAM N/A ☐ PRE-PWHT ☐ POST-PWHT		BSRI. PT PROC. NO. PT(SR)ASME/ANSI REV. 2
CODE/WELD CLASS ASME/ANSI B31.3 S/C	PRE-EXAM CLEANER MAGNAFLUX	PIPE DIA	MATL TYPE S/S	TEMP: MATL 50°F PENETR MATL 60°F

PENETRANT MATERIALS		
SOLVENT MFG: MAGNAFLUX BATCH NO. 94K07K	PENETRANT MFG: MAGNAFLUX BATCH NO. 91H02K	DEVELOPER MFG: MAGNAFLUX BATCH NO. 94D08K

DEFECT CODE:

C - CRACKS R - ROUNDED INDICATION L - LINEAR INDICATION

PART OR WELD NUMBER	DISPOSITION ACC	DISPOSITION REJ	DEFECT CODE (ACC)	DEFECT CODE (REJ)	REMARKS
FW-1	X				
FW-2	X				

SKETCH:

NOTES:	EXAMINER	LEVEL	DATE
USED CONTACT THERMOMETER CH 3/6/95	[signature]	II N1	4/17/96
N1 - INSPECTIONS ACCEPTED ON 3/6/95	INTERPRETER	LEVEL	DATE
EXAM AND INTERPRETER BLOCK	[signature]	II N1	4/17/96
INAVERTANTLY NOT SIGNED CH 4/17/96	WITNESSED BY		DATE

Page 15 of 24

AWS

WIR NUMBER	NONDESTRUCTIVE EXAMINATION REPORT LIQUID PENETRANT EXAMINATION			REPORT NUMBER IR. LOG NO.
1780-LWM-Z02-M-003				1780-LWM 2-02-M003
JOB NUMBER 1780	NAME HOLD TANK CELL - BASE PLATES			DATE 3/6/95
ISO NO/DWG ~~CCS~~ C-CS-S-0054/0	LINE NO./PART ID FIELD WELDS	TIME OF EXAM ☐ PRE-PWHT ☐ POST-PWHT N/A		BSRI. PT PROC. NO. PT. (SR) AWS Rev2
CODE/WELD CLASS AWS-D1.1-90	PRE-EXAM CLEANER MAGNAFLUX	PIPE DIA N/A	MATL TYPE S/S	TEMP: MATL 50°F PENETR MTL 60°F

CH 3/6/95

PENETRANT MATERIALS		
SOLVENT MFG: MAGNAFLUX BATCH NO. 94K07K	PENETRANT MFG: MAGNAFLUX BATCH NO. 91H02K	DEVELOPER MFG: MAGNAFLUX BATCH NO. 94D08K

DEFECT CODE: C - CRACKS R - ROUNDED INDICATION L - LINEAR INDICATION

PART OR WELD NUMBER	DISPOSITION ACC	DISPOSITION REJ	DEFECT CODE (ACC)	DEFECT CODE (REJ)	REMARKS
FW 1	X				
FW 3	X				
FW 5	X				

SKETCH:

NOTE: TEMPERATURE MEASURING DEVICE CONTACT ~~PYROMETER~~ THERMOMETER CH 3/6/95

EXAMINER	LEVEL	DATE
[signature]	II	3/6/95
INTERPRETER	LEVEL	DATE
[signature]	II	3/6/95
WITNESSED BY		DATE

MQS NDE-018-PT
Rev. 0 3/90 BSRI

PS 8 of 9

WIR NUMBER	NONDESTRUCTIVE EXAMINATION REPORT LIQUID PENETRANT EXAMINATION	REPORT NUMBER
1780-LWM-Z02-M-003		N/A

JOB NUMBER	NAME	DATE
20221	SAVANNAH RIVER SITE	3-13-95

ISO NO./DWG	LINE NO./PART ID	TIME OF EXAM	BSRI. PT PROC. NO.
C-CS-S-0054 R/0	FIELD WELDS	☐ PRE-PWHT ☐ POST-PWHT	PT(SR) AWS R/2

CODE/WELD CLASS	PRE-EXAM CLEANER	PIPE DIA	MATL TYPE	TEMP: 65° MATL 55° PENETR MATL 60°
AWS D1.1-90	MAGNAFLUX SKC-S	N/A	S/S	

PENETRANT MATERIALS		
SOLVENT MFG: MAGNAFLUX SKC-S	PENETRANT MFG: MAGNAFLUX SKL-HF/S	DEVELOPER MFG: MAGNAFLUX SKD-NF
BATCH NO. 94K01K	BATCH NO. 91H02K	BATCH NO. 84L031

DEFECT CODE: C - CRACKS R - ROUNDED INDICATION L - LINEAR INDICATION

PART OR WELD NUMBER	DISPOSITION ACC	DISPOSITION REJ	DEFECT CODE (ACC)	DEFECT CODE (REJ)	REMARKS
FW 7	✓				FINAL

SKETCH:

NOTES:	EXAMINER	LEVEL	DATE
~~DIGITAL THERMOMETER CDS#~~ ~~CAL. DATE~~ ~~EXPIRES~~ AMW 3-13-95	[signature]	II	3-13-95
TEMP. MEASURING DEVICE CONTACT THERMOMETER AMW 3-13-95	INTERPRETER [signature]	II	3-13-95
	WITNESSED BY		DATE

Pg 9 of 9

AWS

WIR NUMBER	NONDESTRUCTIVE EXAMINATION REPORT LIQUID PENETRANT EXAMINATION			REPORT NUMBER IR. LOG NO.
N/A				
JOB NUMBER	NAME			DATE
1780m	LATE WASH MOD			5/24/95
ISO NO/DWG	LINE NO./PART ID	TIME OF EXAM		BSRI. PT PROC. NO.
	FIELD WELDS	☐ PRE-PWHT ☐ N/A POST-PWHT		PT. (SR) AWS Rev.
CODE/WELD CLASS	PRE-EXAM CLEANER	PIPE DIA	MATL TYPE	TEMP: 85°F MATL 75°F PENETR MTL 75°F
AWS-D1.1-90	MAGNAFLUX	N/A	S/S	

PENETRANT MATERIALS		
SOLVENT MFG: MAGNAFLUX BATCH NO. 94K01K	PENETRANT MFG: MAGNAFLUX BATCH NO. 91H02K	DEVELOPER MFG: MAGNAFLUX BATCH NO. 94D08K

DEFECT CODE: C - CRACKS R - ROUNDED INDICATION L - LINEAR INDICATION

PART OR WELD NUMBER	DISPOSITION ACC	DISPOSITION REJ	DEFECT CODE (ACC)	DEFECT CODE (REJ)	REMARKS
FW19	✓				FINAL
FW15	✓				FINAL

NOTE: TEMPERATURE MEASURING DEVICE CONTACT PYROMETER.	EXAMINER	LEVEL	DATE
	[signature]	II	5/24/95
	INTERPRETER [signature]	LEVEL II	DATE 5/24/95
	WITNESSED BY		DATE

MQS NDE-018-PT
Rev. 0 3/90 BSRI

Page 21

AWS

WIR NUMBER	NONDESTRUCTIVE EXAMINATION REPORT LIQUID PENETRANT EXAMINATION			REPORT NUMBER IR. LOG NO.
1780-LWM-ZOJ-M-009				N/A
JOB NUMBER 1780(M)	NAME LATE WASH MOD			DATE 3-13-95
ISO NO/DWG C-CS-S-0053	LINE NO./PART ID FIELD WELDS	TIME OF EXAM ☐ PRE-PWHT ☐ N/A POST-PWHT		BSRI. PT PROC. NO. PT. (SR) AWS Rev. 2
CODE/WELD CLASS AWS-D1.1-90	PRE-EXAM CLEANER MAGNAFLUX	PIPE DIA N/A	MATL TYPE S/S	TEMP: 65°F MATL 55°F PENETR MTL 60°F

PENETRANT MATERIALS
SOLVENT MFG: MAGNAFLUX
BATCH NO. 93405K

PENETRANT MFG: MAGNAFLUX
BATCH NO. 91402K

DEVELOPER MFG: MAGNAFLUX
BATCH NO. 84L031

DEFECT CODE: C - CRACKS R - ROUNDED INDICATION L - LINEAR INDICATION

PART OR WELD NUMBER	DISPOSITION ACC	DISPOSITION REJ	DEFECT CODE (ACC)	DEFECT CODE (REJ)	REMARKS
FW 5	✓				FINAL

SKETCH:

NOTE: TEMPERATURE MEASURING DEVICE CONTACT PYROMETER.

EXAMINER	LEVEL	DATE
[signature]	II	3-13-95
INTERPRETER [signature]	LEVEL II	DATE 3-13-95
WITNESSED BY		DATE

MQS NDE-018-PT
Rev. 0 3/90 BSRI

Pg 17 of 21

AWS

WIR NUMBER	NONDESTRUCTIVE EXAMINATION REPORT LIQUID PENETRANT EXAMINATION			REPORT NUMBER IR. LOG NO. WP# 1780-LWM-203 M-009
NA				
JOB NUMBER	NAME			DATE
1780	FW#1 Pen 2507 Late Wash			2-21-95
ISO NO/DWG	LINE NO./PART ID	TIME OF EXAM		BSRI. PT PROC. NO.
C-CS-S-0059 r0	FIELD WELDS	☐ PRE-PWHT	N/A ☐ POST-PWHT	PT. (SR) AWS Rev. 2
CODE/WELD CLASS	PRE-EXAM CLEANER	PIPE DIA	MATL TYPE	TEMP: 50°F MATL 50°F PENETR MTL 50°F
AWS-D1.1-90	MAGNAFLUX	NA	SS	

PENETRANT MATERIALS SOLVENT MFG: MAGNAFLUX BATCH NO. 93A05K	PENETRANT MFG: MAGNAFLUX BATCH NO. 91H02K	DEVELOPER MFG: MAGNAFLUX BATCH NO. 84L031

DEFECT CODE: C - CRACKS R - ROUNDED INDICATION L - LINEAR INDICATION

PART OR WELD NUMBER	DISPOSITION ACC	DISPOSITION REJ	DEFECT CODE (ACC)	DEFECT CODE (REJ)	REMARKS
FW#1 Pen 2507	✓				FINAL PT accepted.

SKETCH:

NOTE: TEMPERATURE MEASURING DEVICE CONTACT PYROMETER.	EXAMINER	LEVEL	DATE
	W.R. Hatton III	II	2-21-95
	INTERPRETER	LEVEL	DATE
	W.R. Hatton III	II	2-21-95
	WITNESSED BY		DATE

MQS NDE-018-PT
Rev. 0 3/90 BSRI

PS 18 of 21

AWS

WIR NUMBER	NONDESTRUCTIVE EXAMINATION REPORT LIQUID PENETRANT EXAMINATION			REPORT NUMBER IR. LOG NO. 1780-LWM-203 M-009
JOB NUMBER 1780	NAME NOZZLE BOX PEN. 2478			DATE 3/6/95
ISO NO/DWG C-CS-S-0060/0	LINE NO./PART ID FIELD WELDS	TIME OF EXAM ☐ PRE-PWHT ☐ N/A POST-PWHT		BSRI. PT PROC. NO. PT. (SR) AWS Rev.
CODE/WELD CLASS AWS-D1.1-90	PRE-EXAM CLEANER MAGNAFLUX	PIPE DIA N/A	MATL TYPE S/S	TEMP: MATL 50°F PENETR MTL 60°F

PENETRANT MATERIALS
SOLVENT MFG: MAGNAFLUX
BATCH NO. 94K07K

PENETRANT MFG: MAGNAFLUX
BATCH NO. 91H02K

DEVELOPER MFG: MAGNAFLUX
BATCH NO. 94D08K

DEFECT CODE: C - CRACKS R - ROUNDED INDICATION L - LINEAR INDICATION

PART OR WELD NUMBER	DISPOSITION ACC	DISPOSITION REJ	DEFECT CODE (ACC)	DEFECT CODE (REJ)	REMARKS
FW3	X				

SKETCH:

NOTE: TEMPERATURE MEASURING DEVICE CONTACT ~~PYROMETER~~ THERMOMETER TCH 3/6/95	EXAMINER	LEVEL II	DATE 3/6/95
	INTERPRETER	LEVEL II	DATE 3/6/95
	WITNESSED BY		DATE

MQS NDE-018-PT
Rev. 0 3/90 BSRI

JB 19021

AWS

WIR NUMBER	NONDESTRUCTIVE EXAMINATION REPORT LIQUID PENETRANT EXAMINATION			REPORT NUMBER IR. LOG NO.
N/A				1780-LWM-203-M009
JOB NUMBER	NAME			DATE
1780M	LATE WASH MOD			5-4-95
ISO NO/DWG	LINE NO./PART ID	TIME OF EXAM		BSRI. PT PROC. NO.
C-CS-S-0073 R0	FIELD WELDS	☐ PRE-PWHT	N/A ☐ POST-PWHT	PT. (SR) AWS Rev. 1
CODE/WELD CLASS	PRE-EXAM CLEANER	PIPE DIA	MATL TYPE	TEMP: 60°F
AWS-D1.1-90	MAGNAFLUX	N/A	S/S	MATL 60°F PENETR MTL 70°F

PENETRANT MATERIALS		
SOLVENT MFG: MAGNAFLUX BATCH NO. 94K01K	PENETRANT MFG: MAGNAFLUX BATCH NO. 91H02K	DEVELOPER MFG: MAGNAFLUX BATCH NO. 94D08K

DEFECT CODE: C - CRACKS R - ROUNDED INDICATION L - LINEAR INDICATION

PART OR WELD NUMBER	DISPOSITION ACC	DISPOSITION REJ	DEFECT CODE (ACC)	DEFECT CODE (REJ)	REMARKS
FW10	✓				FINAL

SKETCH:

NOTE: TEMPERATURE MEASURING DEVICE CONTACT PYROMETER	EXAMINER	LEVEL	DATE
	[signature]	II	5-4-95
	INTERPRETER	LEVEL	DATE
	[signature]	II	5-4-95
	WITNESSED BY		DATE
	Peter Kelly		5/4/95

MQS NDE-018-PT
Rev. 0 3/90 BSRI

AWS

WIR NUMBER	NONDESTRUCTIVE EXAMINATION REPORT LIQUID PENETRANT EXAMINATION			REPORT NUMBER IR. LOG NO. 1780-LWM-203 M-009
N/A				
JOB NUMBER 1780	NAME PRECIPITATE CELL-PEN. #2507 LATE WASH NOZZLE BOX			DATE 2/8/95
ISO NO/DWG C-CE-S-0020/0	LINE NO./PART ID FIELD WELDS	TIME OF EXAM ☐ PRE-PWHT ☐ N/A POST-PWHT		BSRI. PT PROC. NO. PT. (SR) AWS Rev.2
CODE/WELD CLASS AWS-D1.1-90	PRE-EXAM CLEANER MAGNAFLUX	PIPE DIA N/A	MATL TYPE S/S	TEMP: 45°F MATL 45°F PENETR MTL 45°F

PENETRANT MATERIALS		
SOLVENT MFG: MAGNAFLUX BATCH NO. 94J03K	PENETRANT MFG: MAGNAFLUX BATCH NO. 91H02K	DEVELOPER MFG: MAGNAFLUX BATCH NO. 94K07K

DEFECT CODE: C - CRACKS R - ROUNDED INDICATION L - LINEAR INDICATION

PART OR WELD NUMBER	DISPOSITION ACC	DISPOSITION REJ	DEFECT CODE (ACC)	DEFECT CODE (REJ)	REMARKS
PEN. 2507	X				5- TEMP. ATTACHMENT
(OLD PEN 30)					REMOVAL AREAS SHOW BELOW

SKETCH:

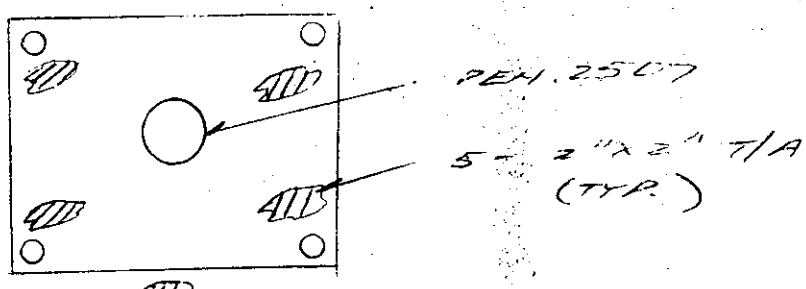

NOTE: TEMPERATURE MEASURING DEVICE 2980 CONTACT PYROMETER. PVE 3/23/95	EXAMINER	LEVEL	DATE
	[signature]	II	2/8/95
	INTERPRETER	LEVEL	DATE
	[signature]	II	2/8/95
	WITNESSED BY N/A		DATE

MQS NDE-018-PT
Rev. 0 3/90 BSRI

Page 21 of 21

ASME

WIR NUMBER	NONDESTRUCTIVE EXAMINATION REPORT LIQUID PENETRANT EXAMINATION			REPORT NUMBER IR. LOG NO. WP#1780-LWM-203 M-009
NA				
JOB NUMBER	NAME			DATE
1780	Late Wash Pen #30 P-2507			2-21-95
ISO NO/DWG	LINE NO./PART ID	TIME OF EXAM		BSRI. PT PROC. NO. PT (SR) ASME/ANSI Rev. 2
C-CS-S-0053 R0	FIELD WELDS	☐ PRE-PWHT ☐ POST-PWHT N/A		
CODE/WELD CLASS	PRE-EXAM CLEANER	PIPE DIA	MATL TYPE	TEMP: 50°F MATL 50°F PENETR MTL 50°F
B31.3 S.C.	MAGNAFLUX	10"	SS.	

PENETRANT MATERIALS
SOLVENT MFG: MAGNAFLUX
BATCH NO. 93A05K

PENETRANT MFG: MAGNAFLUX
BATCH NO. 91H02K

DEVELOPER MFG: MAGNAFLUX
BATCH NO. 84L031

DEFECT CODE: C - CRACKS R - ROUNDED INDICATION L - LINEAR INDICATION

PART OR WELD NUMBER	DISPOSITION ACC	DISPOSITION REJ	DEFECT CODE (ACC)	DEFECT CODE (REJ)	REMARKS
FW#10 2507	✓				FINAL PT accepted

SKETCH:

NOTE: TEMPERATURE MEASURING DEVICE CONTACT PYROMETER

EXAMINER	LEVEL	DATE
W.R. Watton III	II	2-21-95
INTERPRETER	LEVEL	DATE
W.R. Watton III	II	2-21-95
WITNESSED BY		DATE
NA		

MQS NDE-018-PT
Rev. 0 3/90 BSRI

Pg 4 of 4

Exhibit 1

WIR NUMBER	NONDESTRUCTIVE EXAMINATION REPORT LIQUID PENETRANT EXAMINATION			REPORT NUMBER 1780-LWM-203-M009
JOB NUMBER 1780	NAME NOZZLE BOX PEN			DATE 3/6/95
ISO NO./DWG C-CS-S-0060/0	LINE NO./PART ID PEN. 2478	TIME OF EXAM ☐ PRE-PWHT ☐ POST-PWHT		BSRI. PT PROC. NO. PT (SR) ASME/ANSI REV.2
CODE/WELD CLASS ASME/ANSI B31.3 S/C	PRE-EXAM CLEANER MAGNAFLUX	PIPE DIA 10"	MATL TYPE S/S	TEMP: MATL 50°F PENETR MATL 60°F

PENETRANT MATERIALS		
SOLVENT MFG: MAGNAFLUX BATCH NO. 94K07K	PENETRANT MFG: MAGNAFLUX BATCH NO. 91H02K	DEVELOPER MFG: MAGNAFLUX BATCH NO. 94D08K

DEFECT CODE: C - CRACKS R - ROUNDED INDICATION L - LINEAR INDICATION

PART OR WELD NUMBER	DISPOSITION ACC	DISPOSITION REJ	DEFECT CODE (ACC)	DEFECT CODE (REJ)	REMARKS
FW20	X				

SKETCH:

NOTES:	EXAMINER	LEVEL	DATE
USED CONTACT THERMOMETER	[signature]	II	3/6/95
	INTERPRETER	LEVEL	DATE
	[signature]	II	3/6/95
	WITNESSED BY		DATE

PS Sale

ASME

WIR NUMBER	NONDESTRUCTIVE EXAMINATION REPORT LIQUID PENETRANT EXAMINATION	REPORT NUMBER IR. LOG NO.
1780-LWM-Z03-M-009		N/A

JOB NUMBER	NAME	DATE
1780 (M)	LATE WASH MOD	3-13-95

ISO NO/DWG	LINE NO./PART ID	TIME OF EXAM	BSRI. PT PROC. NO.
C-CS-S-0053 R/0	FIELD WELDS	☐ PRE-PWHT ☐ N/A POST-PWHT	PT (SR) ASME/ANSI Rev. 2

CODE/WELD CLASS	PRE-EXAM CLEANER	PIPE DIA	MATL TYPE	TEMP: 65°F MATL 55°F PENETR MTL 60°F
ASME/ANSI B31.3 S.C.	MAGNAFLUX	10"	S/S	

PENETRANT MATERIALS		
SOLVENT MFG: MAGNAFLUX BATCH NO. 93A05M	PENETRANT MFG: MAGNAFLUX BATCH NO. 91H02M	DEVELOPER MFG: MAGNAFLUX BATCH NO. 84L031

DEFECT CODE: C - CRACKS R - ROUNDED INDICATION L - LINEAR INDICATION

PART OR WELD NUMBER	DISPOSITION ACC	DISPOSITION REJ	DEFECT CODE (ACC)	DEFECT CODE (REJ)	REMARKS
FW 30	✓				FINAL

SKETCH:

NOTE: TEMPERATURE MEASURING DEVICE CONTACT PYROMETER	EXAMINER	LEVEL	DATE
	[signature]	II	3-13-95
	INTERPRETER	LEVEL	DATE
	[signature]	II	3-13-95
	WITNESSED BY		DATE

Page 6 of 6

MQS NDE-018-PT
Rev. 0 3/90 BSRI

ASME

WIR NUMBER	NONDESTRUCTIVE EXAMINATION REPORT LIQUID PENETRANT EXAMINATION				REPORT NUMBER IR. LOG NO. N/A
WP# 1780-LWM-Z04-M-003					
JOB NUMBER S1780(M)	NAME LATE WASH MOD.				DATE 2-20-95
ISO NO/DWG	LINE NO./PART ID FIELD WELDS	TIME OF EXAM ☐ PRE-PWHT ☐ N/A POST-PWHT			BSRI. PT PROC. NO. PT (SR) ASME/ANSI Rev.
CODE/WELD CLASS ASME B31.3 SEVERE CYCLIC	PRE-EXAM CLEANER MAGNAFLUX	PIPE DIA 10"	MATL TYPE S/S		TEMP: ____ MATL 51°F PENETR MTL 65°F

PENETRANT MATERIALS		
SOLVENT MFG: MAGNAFLUX BATCH NO. 94K01K	PENETRANT MFG: MAGNAFLUX BATCH NO. 91H02K	DEVELOPER MFG: MAGNAFLUX BATCH NO. 94J03K

DEFECT CODE: C CRACKED R ROUNDED INDICATION L LINEAR INDICATION

PART OR WELD NUMBER	DISPOSITION ACC	DISPOSITION REJ	DEFECT CODE (ACC)	DEFECT CODE (REJ)	REMARKS
FW 10	✓				FINAL
FW 20	✓				FINAL

SKETCH:

NOTE: TEMPERATURE MEASURING DEVICE CONTACT PYROMETER	EXAMINER	LEVEL	DATE
	J. R. Preine	II	2-20-95
	INTERPRETER	LEVEL	DATE
	J. R. Preine	II	2-20-95
	WITNESSED BY		DATE

MQS NDE-018-PT
Rev. 0 3/90 BSRI

DS 5 of 5

AWS

WIR NUMBER	NONDESTRUCTIVE EXAMINATION REPORT LIQUID PENETRANT EXAMINATION			REPORT NUMBER IR. LOG NO.
1780-LWM-709-m-003				N/A
JOB NUMBER	NAME			DATE
1780(M)	LATE WASH MOD			3-13-95
ISO NO/DWG	LINE NO./PART ID	TIME OF EXAM		BSRI. PT PROC. NO.
C-CS-5-0053	FIELD WELDS	☐ PRE-PWHT ☐ N/A POST-PWHT		PT. (SR) AWS Rev. 2
CODE/WELD CLASS	PRE-EXAM CLEANER	PIPE DIA	MATL TYPE	TEMP: 65°F MATL 52°F PENETR MTL 60°F
AWS-D1.1-90	MAGNAFLUX	N/A	S/S	

PENETRANT MATERIALS		
SOLVENT MFG: MAGNAFLUX BATCH NO. 94B01K	PENETRANT MFG: MAGNAFLUX BATCH NO. 91H02K	DEVELOPER MFG: MAGNAFLUX BATCH NO. 84C031

DEFECT CODE: C - CRACKS R - ROUNDED INDICATION L - LINEAR INDICATION

PART OR WELD NUMBER	DISPOSITION ACC	DISPOSITION REJ	DEFECT CODE (ACC)	DEFECT CODE (REJ)	REMARKS
FW 1 PEN 2506	✓				FINAL
FW 2 PEN 2480	✓				FINAL

SKETCH:

NOTE: TEMPERATURE MEASURING DEVICE CONTACT PYROMETER.	EXAMINER	LEVEL	DATE
	[signature]	II	3-13-95
	INTERPRETER	LEVEL	DATE
	[signature]	II	3-13-95
	WITNESSED BY		DATE

MQS NDE-018-PT
Rev. 0 3/90 BSRI

Exhibit 1

WIR NUMBER	NONDESTRUCTIVE EXAMINATION REPORT LIQUID PENETRANT EXAMINATION	REPORT NUMBER
C-070759		N/A

JOB NUMBER	NAME	DATE
1780(m)	LATE WASH ~~FILTER~~ SURGE TANK SUPPORTS PW 9/20/95	7/12/95

ISO NO./DWG	LINE NO./PART ID	TIME OF EXAM	BSRI. PT PROC. NO.
DCF C-DCF-S-00301 C-CS-S-0058 Rev. 0	SUPPORT PEDESTAL/LINER PLATE SEAL WELDS	N/A ☐ PRE-PWHT ☐ POST-PWHT	PT(SR) AWS Rev. 1

CODE/WELD CLASS	PRE-EXAM CLEANER	PIPE DIA	MATL TYPE	TEMP:
AWS D1.1 - STATIC	MAGNAFLUX SKC-S	N/A	304L SS	MATL 80°F PENETR MATL 80°F

PENETRANT MATERIALS		
SOLVENT MFG: MAGNAFLUX BATCH NO. ~~91H02K~~ 94K01K PW 7/12/95	PENETRANT MFG: MAGNAFLUX BATCH NO. 91H02K	DEVELOPER MFG: MAGNAFLUX BATCH NO. 94J03K

DEFECT CODE:

C - CRACKS R - ROUNDED INDICATION L - LINEAR INDICATION

PART OR WELD NUMBER	DISPOSITION ACC	DISPOSITION REJ	DEFECT CODE (ACC)	DEFECT CODE (REJ)	REMARKS
FW2	X				SOUTH EAST SUPPORT
FW4	X				SOUTH WEST SUPPORT
FW5	X				SOUTH LINER PLATE PATCH

SKETCH:

NOTES:	EXAMINER	LEVEL	DATE
TEMP. VERIFIED BY CONTACT THERM. PW 7/12/95	[signature]	II	7/12/95
	INTERPRETER [signature]	LEVEL II	DATE 7/12/95
	WITNESSED BY N/A		DATE

IR LOG# C070759

PAGE 3 OF ~~7~~ 11 7/28/96

MQS NDE-018-PT
Rev. 0 3/90 BSRI

MQS 300 FORM
JOB-BSRI-NDE-2

Exhibit 1

WIR NUMBER	NONDESTRUCTIVE EXAMINATION REPORT LIQUID PENETRANT EXAMINATION	REPORT NUMBER
~~N/A~~ PW 7/13/95 C-070759		N/A

JOB NUMBER	NAME	DATE
1780 (m)	LATE WASH ~~FILTER~~ SURGE TANK SUPPORTS PW 9/20/95	7/13/95

ISO NO./DWG	LINE NO./PART ID	TIME OF EXAM	BSRI. PT PROC. NO.
DCF C-DCF-S-00301 C-CS-S-0058 Rev. 0	SUPPORT PEDESTAL/LINER PLATE SEAL WELDS	N/A ☐ PRE-PWHT ☐ POST-PWHT	PT(SR)AWS Rev. 1

CODE/WELD CLASS	PRE-EXAM CLEANER	PIPE DIA	MATL TYPE	TEMP:
AWS D1.1 - STATIC	MAGNAFLUX SKC-S	N/A	304L SS	MATL 80°F PENETR MATL 80°F

PENETRANT MATERIALS		
SOLVENT MFG: MAGNAFLUX BATCH NO. 94K01K	PENETRANT MFG: MAGNAFLUX BATCH NO. 91H02K	DEVELOPER MFG: MAGNAFLUX BATCH NO. 94J03K

DEFECT CODE: C - CRACKS R - ROUNDED INDICATION L - LINEAR INDICATION

PART OR WELD NUMBER	DISPOSITION ACC	DISPOSITION REJ	DEFECT CODE (ACC)	DEFECT CODE (REJ)	REMARKS
FW1		X		R	NORTH EAST SUPPORT
FW3	X				NORTH WEST SUPPORT
FW6	X				NORTH LINER PLATE PATCH
FW1	X				NORTH EAST SUPPORT - REPAIR

SKETCH:

FW1 DEFECT MARKED IN FIELD - NORTH EAST CORNER OF 3/8" PLATE @ LINER PW 7/13/95

NOTES:	EXAMINER	LEVEL	DATE
TEMP. VERIFIED BY CONTACT THERM. PW 7/13/95	[signature]	II	7/13/95
	INTERPRETER [signature]	II	7/13/95
	WITNESSED BY N/A		

IR LOG# C070759

PAGE 4 OF 7 11 PW 5/20/96

MQS NDE-018-PT
Rev. 0 3/90 BSRI

MQS 300 FORM
JOB-BSRI-NDE-2

Exhibit 1

WIR NUMBER	NONDESTRUCTIVE EXAMINATION REPORT LIQUID PENETRANT EXAMINATION			REPORT NUMBER
C070759				N/A
JOB NUMBER 1780 (m)	NAME LATE WASH MODS.			DATE 8/21/95
ISO NO./DWG C-CS-S-0055 Rev.0	LINE NO./PART ID SEAL WELDS - FILTER SUPPORT	TIME OF EXAM N/A ☐ PRE-PWHT ☐ POST-PWHT		BSRI. PT PROC. NO. PT(SR)-AWS Rev.1
CODE/WELD CLASS AWS D1.1 STATIC (see NOTES)	PRE-EXAM CLEANER MAGNAFLUX SKC-S	PIPE DIA N/A - PLATE	MATL TYPE 304LSS	TEMP: MATL 85°F PENETR MATL 85°F

PENETRANT MATERIALS		
SOLVENT MFG: MAGNAFLUX BATCH NO. 94K01K	PENETRANT MFG: MAGNAFLUX BATCH NO. 91H02K	DEVELOPER MFG: MAGNAFLUX BATCH NO. 94J03K

DEFECT CODE: C - CRACKS R - ROUNDED INDICATION L - LINEAR INDICATION

PART OR WELD NUMBER	DISPOSITION ACC	DISPOSITION REJ	DEFECT CODE (ACC)	DEFECT CODE (REJ)	REMARKS
FW7 (2 Plcs.)	X				C-CS-S-0055 SECT. A - FLOOR PLATES
FW8 (4 Plcs.)	X	X		L, R, C	C-CS-S-0055 SECT. A WEST WALL PLATES
FW9 (2 Plcs.)	X	X		L	C-CS-S-0055 SECT. B NORTH WALL PLATES

SKETCH:

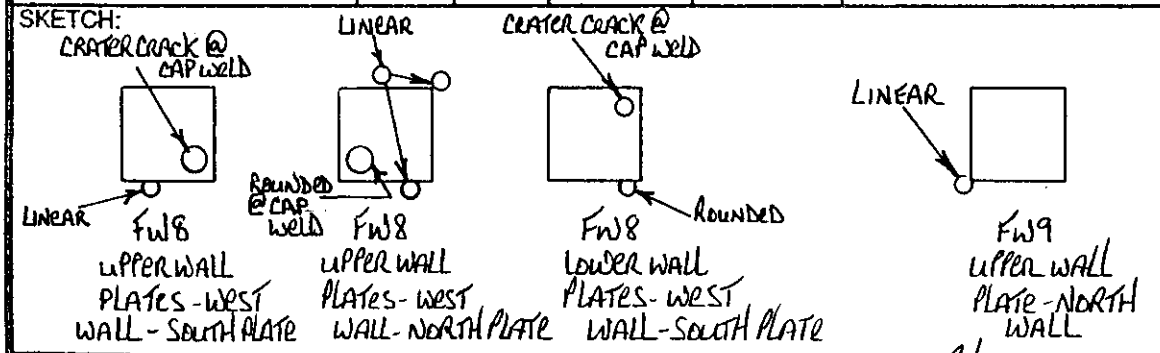

NOTE: PLATES NOT SHOWN ARE ACCEPTED. PW 8/21/95

NOTES:	EXAMINER	LEVEL	DATE
TEMP. VERIFIED BY CONTACT THERMOMETER PW 8/21/95	[signature]	II	8/21/95
NOTE: ALL INDICATIONS IDENTIFIED IN FIELD AND WILL BE REPAIRED. PW 8/21/95	INTERPRETER [signature]	II	8/21/95
NOTE: NO INDICATIONS ALLOWED. PW 8/21/95	WITNESSED BY N/A		DATE

IR# C010759

PAGE 5 OF 11

PW 3/28/96

Exhibit 1

WIR NUMBER	NONDESTRUCTIVE EXAMINATION REPORT LIQUID PENETRANT EXAMINATION	REPORT NUMBER
C070759	FW 8/22/95	N/A

JOB NUMBER	NAME	DATE
1786(m)	LATE WASH & MODS.	8/22/95

ISO NO./DWG	LINE NO./PART ID	TIME OF EXAM	BSRI. PT PROC. NO.
C-CS-S-0055 REV.0	SEAL WELDS - FILTER SUPPORT	N/A ☐ PRE-PWHT ☐ POST-PWHT	PT(SR)-AWS REV.1

CODE/WELD CLASS	PRE-EXAM CLEANER	PIPE DIA	MATL TYPE	TEMP:
AWS D1.1 STATIC (SEE NOTES)	MAGNAFLUX SKC-S	N/A - PLATE	304L SS	MATL 75°F PENETR MATL 75°F

PENETRANT MATERIALS SOLVENT MFG: MAGNAFLUX BATCH NO. 94K01K	PENETRANT MFG: MAGNAFLUX BATCH NO. 91H02K	DEVELOPER MFG: MAGNAFLUX BATCH NO. 94J03K

DEFECT CODE: C - CRACKS R - ROUNDED INDICATION L - LINEAR INDICATION

PART OR WELD NUMBER	DISPOSITION ACC	DISPOSITION REJ	DEFECT CODE (ACC)	DEFECT CODE (REJ)	REMARKS
FW8	X				UPPER PLATE - WEST WALL - SOUTH
FW8	X				UPPER PLATE - WEST WALL - NORTH
FW8	X				LOWER PLATE - WEST WALL - SOUTH
FW9	X				UPPER PLATE - NORTH WALL

SKETCH:

NOTES:	EXAMINER	LEVEL	DATE
TEMP. VERIFIED BY CONTACT THERMOMETER. FW 8/22/95	FW	II	8/22/95
NOTE: REPORT FOR RE-EXAM. AFTER REPAIRS OF INDICATIONS ON REPORT DATED 8/21/95 FW 8/22/95	INTERPRETER FW	II	8/22/95
NOTE! NO INDICATIONS ALLOWED. FW 8/21/95	WITNESSED BY N/A		

IR# C070759 PAGE 6 OF 11

MQS NDE-018-PT
Rev. 0 3/90 BSRI

MQS 300 FORM
JOB-BSRI-NDE-2

INTER-OFFICE MEMORANDUM
Savannah River Site

11-Oct-1994 10:24am EDT

To:	Matthew A. Hunter	(HUNTER-MA-L2335 AT A1 AT SASRS2)
To:	Chuck Hayes	(HAYES-CR-Z9722 @A1@SLSRP1)
To:	William D. O'Grady(R. Alley/K. Dale	(OGRADY-WD-D0650 @A1@SASRS3)
CC:	DAVID J. MARTIN	(MARTIN-DJ-O5585 AT A1 AT SASRS2)
CC:	James M Lovekamp	(LOVEKAMP-JM-Y5029 @A1@SRXSS2)

From: Douglas C. Bumgardner
(BUMGARDNER-DC-L5295 AT A1 AT SASRS2)
Dept: WM&ER/HLWE
Tel : 5570500

RHLWE Wastewater Collection Permit

A meeting is scheduled for tomorrow (10/12/94) at 14:00 hrs. in 742-6G. The purpose of the meeting is to discuss resolution of EPD comments against the RHLWE Wastewater Collection Permit application.

Agenda:

Review comments, propose resolutions and reach agreement on required revisions. (Design requires further direction on inclusion of testing requirements in application.)

Assign actions.

Determine schedule for revision, approval and issuance to SCDHEC.

Please address any comments or questions to me at extension 7-0500.

INTER-OFFICE MEMORANDUM
Savannah River Site

09-Sep-1994 01:26pm EDT

To: See Below

From: Chuck Hayes (HAYES-CR-Z9722)
Dept: EPD
Tel : 7258838

RHLWE PROJECT SUSPENSION - REGULATORY IMPACTS (U)

I concur with Matt's regulatory impact assessment. Please contact me if there are any further questions.

Distribution:

To:	D T BIGNELL	(BIGNELL-DT-O5579)
CC:	SUSAN S. CATHEY	(CATHEY-SS-O4949 @A1@SASRS2)
CC:	W. DANNY DUNAWAY	(DUNAWAY-WD-O7436)
CC:	CARY B. STEVENS	(STEVENS-CB-O5981 @A1@SASRS2)
CC:	W.M. WIERZBICKI	(WIERZBICKI-WM-O5933 @A1@SASRS2)
CC:	Ann R. Gough	(GOUGH-AR-Y5417)
CC:	NEIL R. DAVIS	(DAVIS-NR-O5416 @A1@SASRS2)

DTB ASKED ME TO RESPOND
OR TO ASSESS REGULATORY IMPACT
AND SEND HIM A WRITTEN RESPONSE.

2

INTER-OFFICE MEMORANDUM
Savannah River Site

09-Sep-1994 12:04pm EDT

To: Chuck Hayes (HAYES-CR-Z9722 @A1@SLSRP1)

From: Matthew A. Hunter (HUNTER-MA-L2335 AT A1 AT SASRS2)
Dept: HLW Env Compl
Tel : 557-6416

Impacts from the Delay of the RHLWE (U)

Per your request, I have reviewed the letter from Mr. Richardson with regard to the delay of the Replacement High Level Waste Evaporator for twelve months. I have reviewed both the Industrial Wastewater Permit for the Tank Farms and the Federal Facility Agreement, including all correspondences, and have found no negative impacts from this delay.

A Plan and Schedule for Waste Removal from the HLW Tank Farms has been submitted as a requirement of the Federal Facility Agreement. This Plan and Schedule have not been approved by the South Carolina Department of Health and Environmental Control and did not include any commitments for start up of the RHLWE. The schedule showed the removal from service of each of the non-Type III waste tanks and the 242-H evaporator. The projected schedule for the removal of each of the tanks was tracking well ahead of the commitment date. Due to the recent failure of the heating tube bundle for the 242-H evaporator, it has already been removed from service. The delay in the RHLWE will cause the cushion in the scheduled removal date to compress significantly but should not cause the scheduled removal dates to be slipped.

The Industrial Wastewater Permit to Operate for the Tank Farms has a special condition that only allows the continued use of Tank 13 as the feed tank to the 242-H evaporator as long as the schedule the RHLWE does not vary significantly from the "approved schedule". Since the Plan and Schedule have not been approved by SCDHEC, it has been assumed that operation of the RHLWE by the expiration date of the Industrial Wastewater Permit to Construct for the Tank Farms of 1/1/98 was acceptable to the regulators. Since the 242-H evaporator has been shutdown, the special condition is no longer of concern. However, the SRS will have to request the regulators to extend the expiration date of the construction permit to allow for the completion of the evaporator project.

Thanks for asking. If I can be of any more assistance, please contact me.

→ MAK REIMNITZ

Department of Energy
Savannah River Operations Office
P.O. Box A
Aiken, South Carolina 29802

DOE-PD-FY94-0311

AUG 24 1994

Mr. Austin B. Scott, Jr.
General Manager
High Level Waste Management Division
Westinghouse Savannah River Company
P.O. Box 616
Aiken, SC 29802

Dear Mr. Scott:

Suspension of Work on Project S-4062, Replacement High Level Waste Evaporator (RHLWE)

Fiscal Year 1995 funding restraints will not support optimum High Level Waste System goals and initiatives. It has been determined that the least impactive solution is to delay the RHLWE for approximately one (1) year. Effective immediately you are requested to begin an orderly and safe shutdown of construction activities and place the site in a condition that will allow resumption of work in 12 months with minimum extra effort and expense. The following guidelines are offered to assist in your shutdown efforts.

- Minimum Other Project Cost expenditures
- Minimal or no overtime expenditures
- Skinning the Evaporator Building
- Completion of the Evaporator Vessel Procurement
- Completion of the Distributed Control System Procurement
- Completion of the Feed Pump Procurement
- Completion of crane installation
- Installation of Tank 37 Gravity Drain Line

A formal plan and schedule for the suspension of work and maintenance of the site for the 12 months duration should be submitted by September 8, 1994.

Please direct questions to me, Howard Gnann (7-1067), or John Altoonian (7-1055).

Sincerely,

Steven D. Richardson
Assistant Manager
for High Level Waste

HLWPD:JCT:kl

cc:
Dr. G. T. Wright, WSRC, 703-H
H. Handfinger, WSRC, 704-56A
Robert Wilson, WSRC, 742-2G
C. J. Boasso, WSRC, 704-60H

Westinghouse Savannah River Company

HLW-HLE-95-0081

High Level Waste Engineering

Process Systems Engineering

March 3, 1995

TO: M. A. Hunter, 703-7C
T. Syfert, 703-7C

FROM: M. J. Rea, 707-H (x7-8537) MJR

Wastewater Permit Update -
242-16H Evaporator Pot Replacement

Plans are to replace the 242-16H Evaporator pot during the May-August outage with a similar vessel constructed by Joseph Oat Corporation. The new vessel is consistent with the description in the Wastewater Permit. However, the table providing design parameters for this vessel had several errors (Table 7-32). I have attached marked up copies of the information related to both vessels so that the State can be informed of the upcoming changes to the facility. The existing evaporator will be disposed of in the E-Area vaults. Let me know if you need additional info.

cc: D. M. Grimm, 707-H
C. A. Polson, 707-H
A. W. Wiggins, 241-84H
W. D. Lanham, 707-H
M. A. Ceravolo, 707-H
R. H. Moore, 707-H
J. E. Griffiths, 241-102F
J. A. Quillen, 707-H
C. B. Stevens, 742-6G
R. L. Salizzoni, 707-H

ORIGINAL FORM 99

FAX TRANSMITTAL

# of pages ▶ 1

To: Chuck Hayes
Matt Hunter

Fax #: 546-76

TABLE 7-32

~~NEW SPARE~~ EVAPORATOR POT SPECIFICATIONS
(~~Existing~~ Evaporator System)
242-16H

DESCRIPTION	SPECIFICATION
Year Complete	1994
vendor	Joseph Oat Corporation
Evaporator Pot	
Approximate Dimensions (ϕ, height)	8'ϕ x 16' 5-1/2"
Capacity, Designed Liquid Level (Working)	1800 GAL
Capacity, Overheads Flowrate (~~Average~~) (Ave, max)	10 ~~17~~ GPM (AVE), ~~21~~ 12 GPM (MAX)
Shell Thickness	3/8 INCH
Material of Construction	304L STAINLESS STEEL
(limited by demister design) Design Temperature	~~230°F~~ 320°F
Design Pressure	15 PSIG
Demister	
Dimensions (diameter, height)	36 30" D, ~~25~~ 6' H
~~Capacity (nominal)~~ Material of Construction	304L STAINLESS STEEL
~~Shell Thickness~~	~~16 PSIG~~
capacity (max flow)	6000 lb/hr (12 gpm)
Design Temperature	
Design Pressure	
Heat Tube Bundle	
Dimensions (ϕ, length)	0.75" O.D. x 7.5'L
Number of Tubes (maximum)	233 BENT TUBES
Material of Construction	HASTELLOY G-30 (Or Equivalent)

3/17/95 TOLD MATT WE PROBABLY NEED TO UPDATE THIS PAGE & SEND TO DHEC ~~XX~~ MAY REQUIRE PE STAMP CPH

TABLE 7-21

EVAPORATOR POT SPECIFICATIONS
(242-16H Evaporator System)

vendor: General Atomic

This vessel will be disposed of in the E-Area Vaults

DESCRIPTION	SPECIFICATION
Year Installed	1984 (Rebuilt)
Evaporator Pot	
Approximate Dimensions (diameter, height)	8' D X 16' 5½" H
Capacity, Designed Liquid Level (working)	1800 GALLONS
Capacity, Overheads Flow Rate (average)	6 GPM
Shell Thickness	3/8 INCH
Material of Construction	304L STAINLESS STEEL
Design Temperature	320 °F
Design Pressure	15 PSIG
Heater Tube Bundle	
Dimension (diameter, length)	0.75" O.D. X 7.5' L
Number of Tubes (maximum)	233 BENT TUBES
Material of Construction	14 GAUGE, 304L STAINLESS STEEL
De-entrainment Bubble Cap Trays	
Dimensions (diameter, height)	4' D X 3' H
Number of Trays	3
Bubble Caps per Tray	20 NO. 58 MODIFIED GLITCH
Material of Construction	304L STAINLESS STEEL
Demister	
Dimensions (diameter, height)	25" D x 8" H
Material of Construction	304L STAINLESS STEEL

by various tests in accordance with National Standards. Coupons of the material (identified by lot number) will be subjected to an electrolytic oxalic acid etching test (ASTM A262), and a boiling nitric acid test (ASTM A262). The material will be inspected for pitting following these tests. Upon satisfaction of the ASTM requirements, a test report will be issued by the supplier and the material will be approved for use.

7.1.3 New Spare Evaporator Pot

The new spare evaporator pot and related equipment will be constructed of materials which meet the same standards as the existing evaporators. Similar materials testing methods will be used, in accordance with National Standards. Table 7-32 provides summary specifications for this piece of equipment.

7.2 In-Tank Precipitation

The ITP process equipment consists of retrofitted Type IIIA waste tanks and a new filtration building with associated equipment. This process equipment is described below.

This pot was constructed by Joseph Oat Corporation and is planned to be installed in the 242-16H Evaporator cell during the May-August 1995 outage

WSRC-EPD Telecon Record

First

Subject Title : Wastewater Permitting ***Date:*** 2/21/95 ***Time:***

Purpose: Inform SCDHEC of proposed transfer of up to 12,000 gallons of chromated cooling water to Tank 43 in the High Level Waste Tank Farm

Call Made By: C. R. HAYES CR Hayes

Person(s) Contacted: L. E. ARRINGTON

Discussion Notes:

Caller	Respondent
We are proposing to transfer up to 12,000 gallons of chromated cooling water to Tank 43 in the High Level Waste Tank Farm. Waste will be evaporated and eventually end up in the Vitrification facility and will not be seen at H-016 Outfall.	
We periodically introduce a 55 gallon drum here or there into the waste tanks. But since this major maintenance activity will produce a volume of up to 12,000 gallons, we felt like we would give you a courtesy call.	
We have looked at this from a chemistry standpoint and feel that accepting this volume will not be a problem. If we feel that there is a chance that introducing the entire volume at once could create a problem, we will blend it (possibly in Tanks other than Tank 43).	Since the material is going to end up in the glass, I have no concerns. As the material will not be sent to ETF and eventually H-016, we do not have a problem. We appreciate the notification

Additional Actions Needed:
None.

Distribution:
Permit File W-0517
M. A. Hunter, 703-7C
C. B. Stevens, 742-6G

0520

- TOT. VOL: ~20,000 GALLONS
- REASON: MODS/REPAIRS (10-12K MORE LIKELY)
- SCHEDULE: MID 4/95

OUTLINE

TANK 43 OR 26

1. WASTE TANK COOL DOWN
   - INDEPENDENT OF SPECIAL PROCEDURE
   - PRE REQUISITE

2. VALVE LINE-UP [COOLING COIL LOCK-OUT]
   - CLOSE VALVES 5, 6, & 7 (TKS 9-12)
   - CLOSE VALVES 2, 7, & 8 (TKS 13-16)
   - CLOSE VALVES 1 & 2 (TKS 29-32, 35)
   - CLOSE VALVES 5, 6, & 7 (TKS 36-37)

3. INSTALL HOSE CONNECTIONS FROM VENTS TO DRUMS IN VALVE HOUSES
   - VALVE 12 (TKS 9-12)
   - VALVE 14 (TKS 13-16)
   - VALVE 19 (TKS 29-32)
   - VALVE 12 (TK 35)
   - VALVE 12 (TKS 36-37)

4. ISOLATE CCW IN EPH SYSTEM. [VALVES: 17, 42, 18, 55, 58, 61, 64]

5. SHUT DOWN CCW PUMPS IN WPH & EPH

6. DRAIN EPH HEADERS TO TKS 9-16 AT CATCH TANK
   - CONNECT HOSE TO 1½" MANUAL VALVES AT CATCH TANK FOR CCW SUPPLY AND RETURN.
   - VENT AT TK. 29 (VALVE 19)
   - VENT AT TK. 14 (VALVE 14)

6A. ISOLATE CCW ON DBPR
   - CLOSE 4 ISOLATION VALVES.

(7) • DRAIN WPH HEADERS ON WEST HILL
- CONNECT HOSE TO VALVES 12 AND 13 AT TANK 35
- VENT THROUGH VALVES 12 AND 13 AT TANK 37

(8) • DRAIN WPH HEADERS FROM INSIDE WPH.
- CONNECT HOSE TO VALVES 57 AND 59 INSIDE WPH
- VENT FROM HIGH-POINT VENT ON DBPR AFTER OPENING 2 ISOLATION VALVES.

(9) • INSTALL WET TAPS ON EPH HEADER AT LOCATION FOR TIE-IN BY CONSTRUCTION

(10) • DRAIN EPH HEADERS
- CONNECT HOSES TO WET TAP DRAINS.
- VENT FROM VALVE 19 ON TK. 29.

(11) PERFORM WORK

(12) • DRAIN CCW IN EPH INTO HEADERS
- OPEN THEN CLOSE: VALVES 17, 18, 64, 42, 61, 58, 55.
- CLOSE NEW ISOLATION VALVE

(13) • VALVE LINE-UP FOR WPH SYSTEM STARTUP
- OPEN BYPASSES ON AIR PURGE CONDENSERS
- VALVES 1, 2, 3, 4 (TKS 9-12)
- VALVES 1, 3, 4, 10 (TKS 13-16)
- VALVES 14, 15, 18 (TKS 29-32)
- VALVES 14, 15 (TK 35)
- VALVES 1, 2, 3, 4 (TKS 36-37)

(14) • FILL/VENT (PASSIVELY)
- FILL VIA WPH SURGE TANK.
- ~~VENT~~ UNTIL STEADY STREAM APPEARS FROM THE FOLLOWING VENTS
- VALVE 12 (TKS 9-12)
- VALVE 14 (TKS 13-16)
- VALVE 19 (TKS 29-32)
- VALVE 12 (TKS 35-37)

(15) ISOLATE TKS 29-32 AND 35-37 FROM SYSTEM.
- CLOSE NEW ISOLATION VALVES @ 4.

(16) FILL/VENT (ACTIVELY)
- TURN ON WPH CCW PUMP
- FILL VIA SURGE TANK
- VENT THROUGH VALVES 12 ON TKS 9-12 UNTIL A STEADY STREAM APPEARS
- VENT THROUGH VALVES 14 ON TKS 13-16 UNTIL A STEADY STREAM APPEARS.

(17) OPEN ISOLATION VALVE FOR TANKS 29-32. (SUPPLY)

(18) FILL/VENT (ACTIVELY)
- FILL VIA SURGE TANK
- VENT THROUGH VALVE 19.

(19) SLOWLY OPEN ISOLATION VALVE FOR TANKS 29-32 (RETURN)

(20) OPEN ISOLATION VALVE FOR TANKS 35-37 (SUPPLY)

(21) FILL/VENT (ACTIVELY)
- FILL VIA SURGE TANK
- VENT THROUGH VALVE 12.

(22) OPEN (SLOWLY) ISOLATION VALVE FOR TANKS 35-37 (RETURN).

(23) IN-SERVICE LEAK TEST
- ALL MODIFICATIONS
- ALL VISIBLE LINES

(24) ADD Na_2CrO_4 UNTIL CONCENTRATION IS 600 ppm.

(25) ADD NaOH UNTIL PH IS 10.

(26) LEAK-CHECKING COILS (TKS 9-12)
- OPEN VALVES 5, 6 TKS(9-12)
- OPEN VALVE 7
- CLOSE BY-PASS

(27) LEAK-CHECKING COILS (TKS 13-15)
- OPEN VALVES 7, 8
- OPEN VALVE 2
- CLOSE BY-PASS

(28) LEAK-CHECKING COILS (TKS 29-32 : 35)
- OPEN VALVES 1
- OPEN VALVES 2
- CLOSE BY-PASS

(29) LEAK-CHECKING COILS (TKS 36-37)
- OPEN VALVES 5, 6
- OPEN VALVE 7
- CLOSE BY PASS

WEST PUMPHOUSE CCW HEADERS

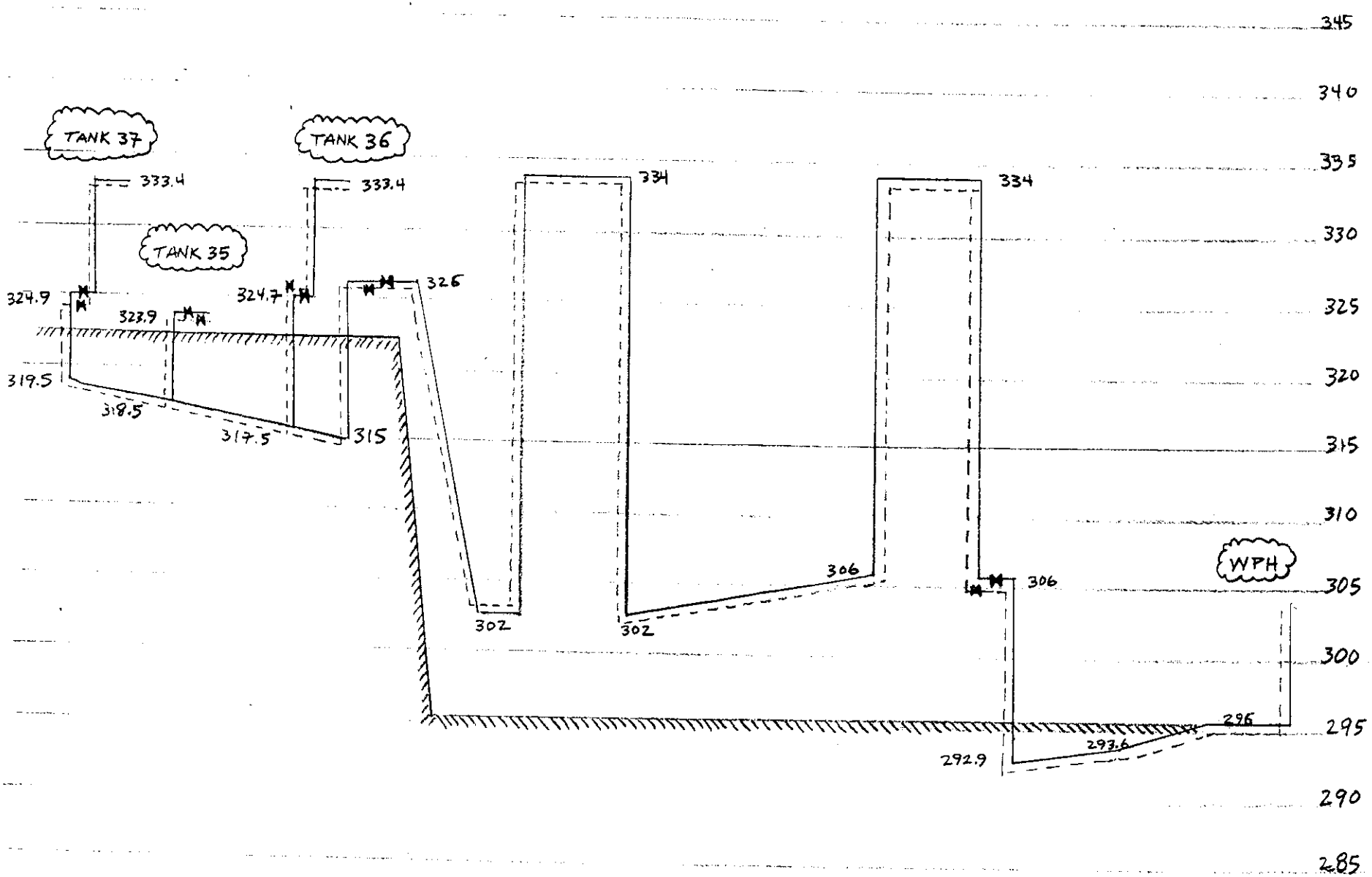

JSL 2/13/95

Title of Project

Subject

Computer

Date

Sheet No.

Project No.

Works

EAST PUMPHOUSE CCW HEADERS

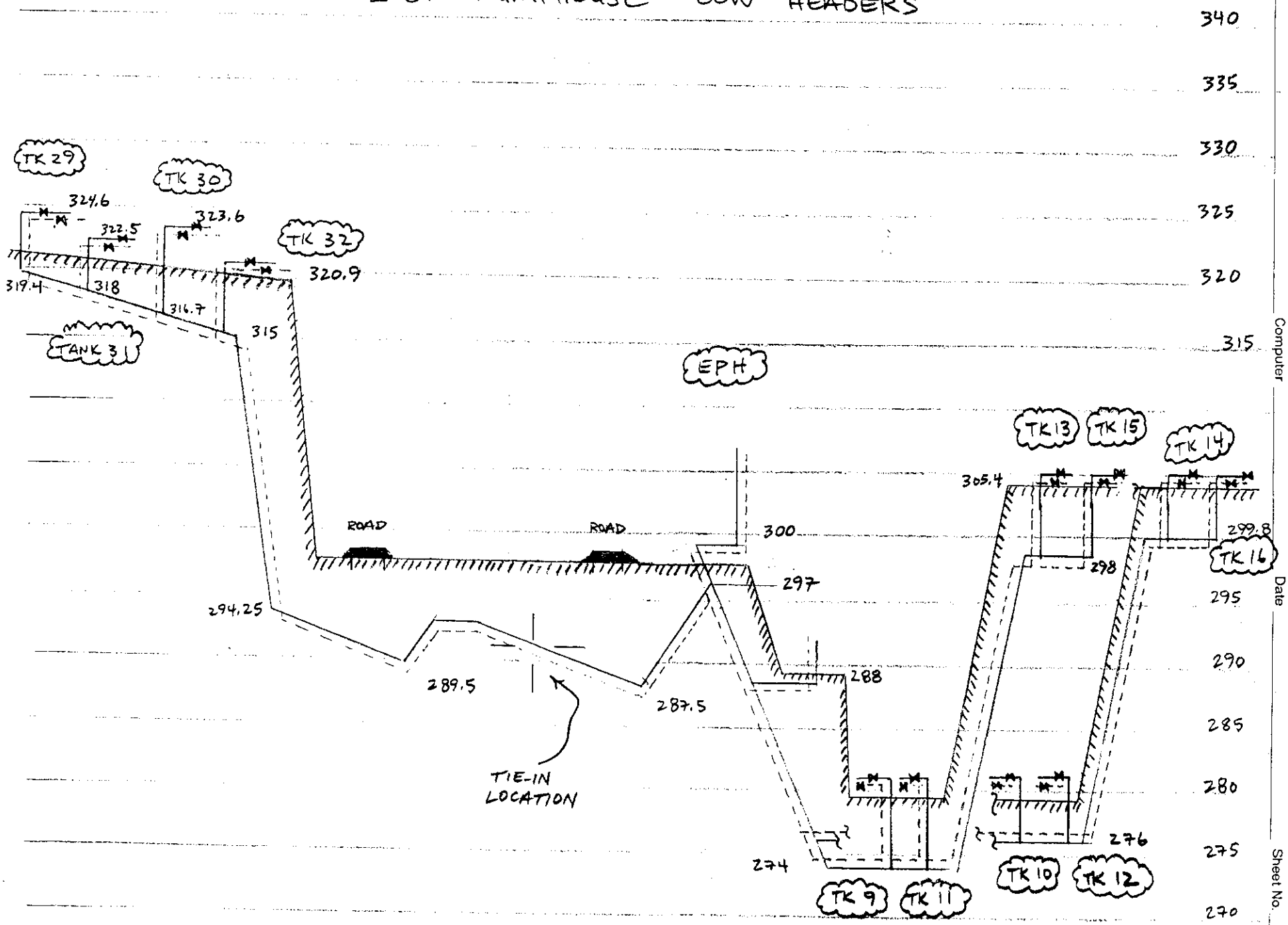

Title of Project

Subject

Computer

Date

Sheet No.

Project No.

Works

ACTIVITY ID	EARLY START	EARLY FINISH	ORIG DUR	REM DUR	TOTL FLT
RHLWE - CONSTRUCTION					
CN63670	9FEB95A	25APR95	40	40	2
CN63660	28FEB95	10MAR95	9	9	-2
CN63680	3APR95	1MAY95	20	20	-2
CN63690	3APR95	17APR95	10	10	5
CN63700	3APR95	7APR95	5	5	28
CN63710	18APR95	20APR95	3	3	5
CN63720	25APR95	27APR95	3	3	18
CN63730	2MAY95	5MAY95	4	4	-2
CN63740	25MAY95	30MAY95	3	3	-2
CN63760	25MAY95	30MAY95	3	3	-1
CN63750	31MAY95	31MAY95	1	1	-2
RHLWE - OPERATIONAL STARTUP					
OP0I24090	6FEB95A	16FEB95	7	4	0
OP0075095	6FEB95A	27FEB95	10	10	-2
OP0075190	7FEB95A	1MAR95	16	12	22
OP0075150	10FEB95A	3MAR95	15	14	10
OP0075116	13FEB95A	6MAR95	15	15	29
OP0075117	13FEB95	27FEB95	10	10	49
OP0075118	13FEB95	27FEB95	10	10	49
OP0075180	13FEB95	17FEB95	5	5	24
OP0I24095	17FEB95	24FEB95	5	5	0
OP0075185	21FEB95	6MAR95	10	10	24
OP0I24100	27FEB95	10MAR95	10	10	0
OP0075195	2MAR95	8MAR95	5	5	22
OP0075152	6MAR95	24MAR95	15	15	10
OP0075119	7MAR95	27MAR95	15	15	29
OP0I24105	13MAR95	17MAR95	5	5	0
OP0075160	13MAR95	31MAR95	15	15	-2
OP0075175	13MAR95	17MAR95	5	5	23
OP0I24110	20MAR95	24MAR95	5	5	0
OP0I24115	27MAR95	31MAR95	5	5	0
OP0I24120	3APR95	7APR95	5	5	0
OP0075140	10APR95	17APR95	5	5	0

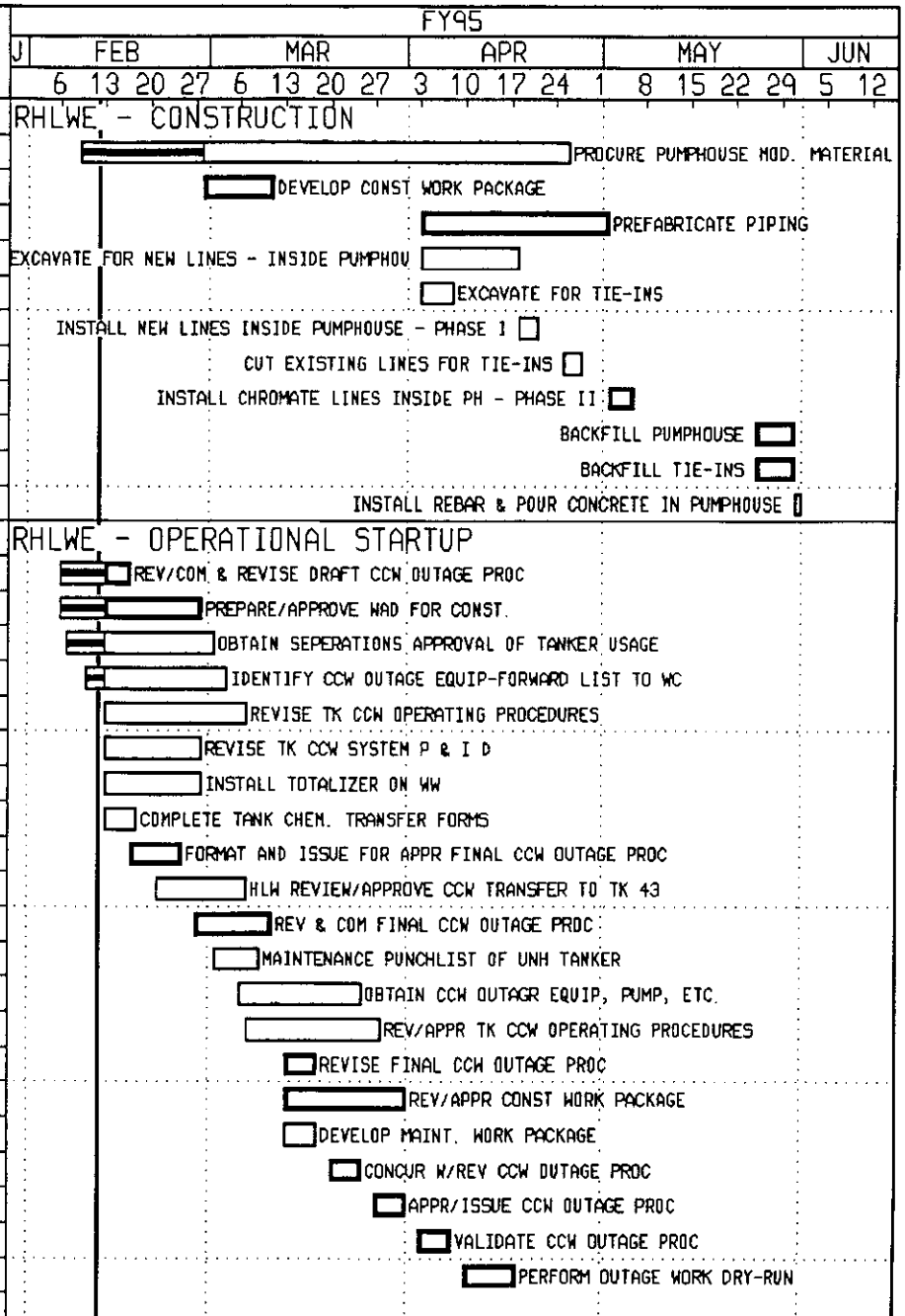

Plot Date 14FEB95
Data Date 12FEB95
Project Start 22MAY94
Project Finish 27JAN00

(c) Primavera Systems, Inc.

Activity Bar/Early Dates
Critical Activity
Progress Bar
Milestone/Flag Activity

REBE

Sheet 1 of 2

BECHTEL SAVANNAH RIVER INC.
RHLW EVAPORATOR: FORECAST SCHEDULE
PUMPHOUSE MODIFICATION

DEPARTMENT OF ENERGY - SAVANNAH RIVER SITE

Date	Revision	Checked	Approved

ACTIVITY ID	EARLY START	EARLY FINISH	ORIG DUR	REM DUR	TOTL FLT
OP0075155	13APR95	17APR95	2	2	3
OP0075500		17APR95	0	0	0
OP0075110	18APR95	24APR95	5	5	3
OP0075115	18APR95	8MAY95	15	15	0
OP0075145	8MAY95	10MAY95	3	3	-2
OP0075120	11MAY95	17MAY95	5	5	-2
OP0075125	18MAY95	24MAY95	5	5	-2
OP0075130	18MAY95	24MAY95	5	5	4
OP0075135	1JUN95	5JUN95	3	3	-2

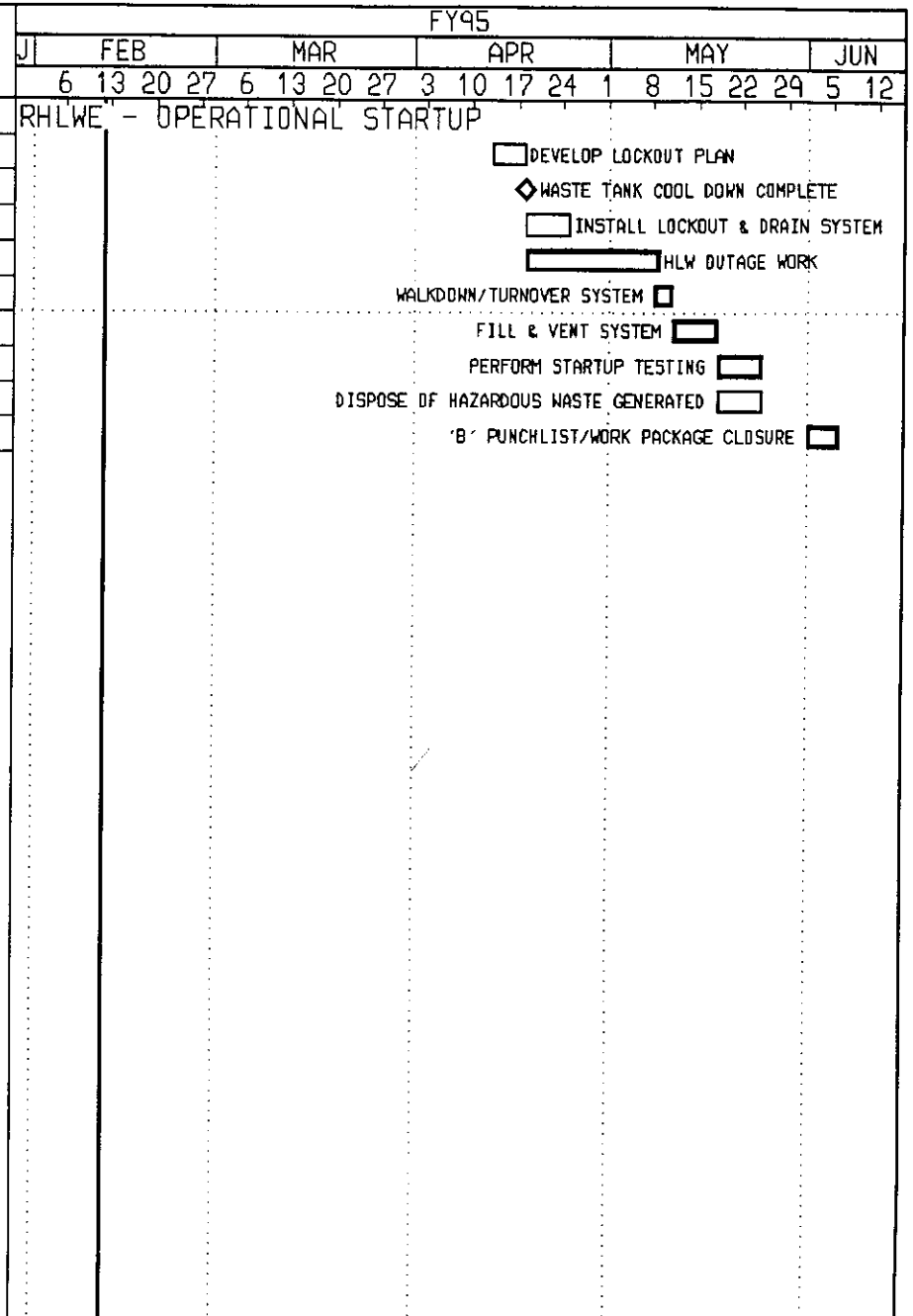

Plot Date 14FEB95
Data Date 12FEB95
Project Start 22MAY94
Project Finish 27JAN00

(c) Primavera Systems, Inc.

Activity Bar/Early Dates
Critical Activity
Progress Bar
Milestone/Flag Activity

REGE

Sheet 2 of 2

BECHTEL SAVANNAH RIVER INC.
RHLW EVAPORATOR: FORECAST SCHEDULE
PUMPHOUSE MODIFICATION

DEPARTMENT OF ENERGY - SAVANNAH RIVER SITE

Date	Revision	Checked	Approved

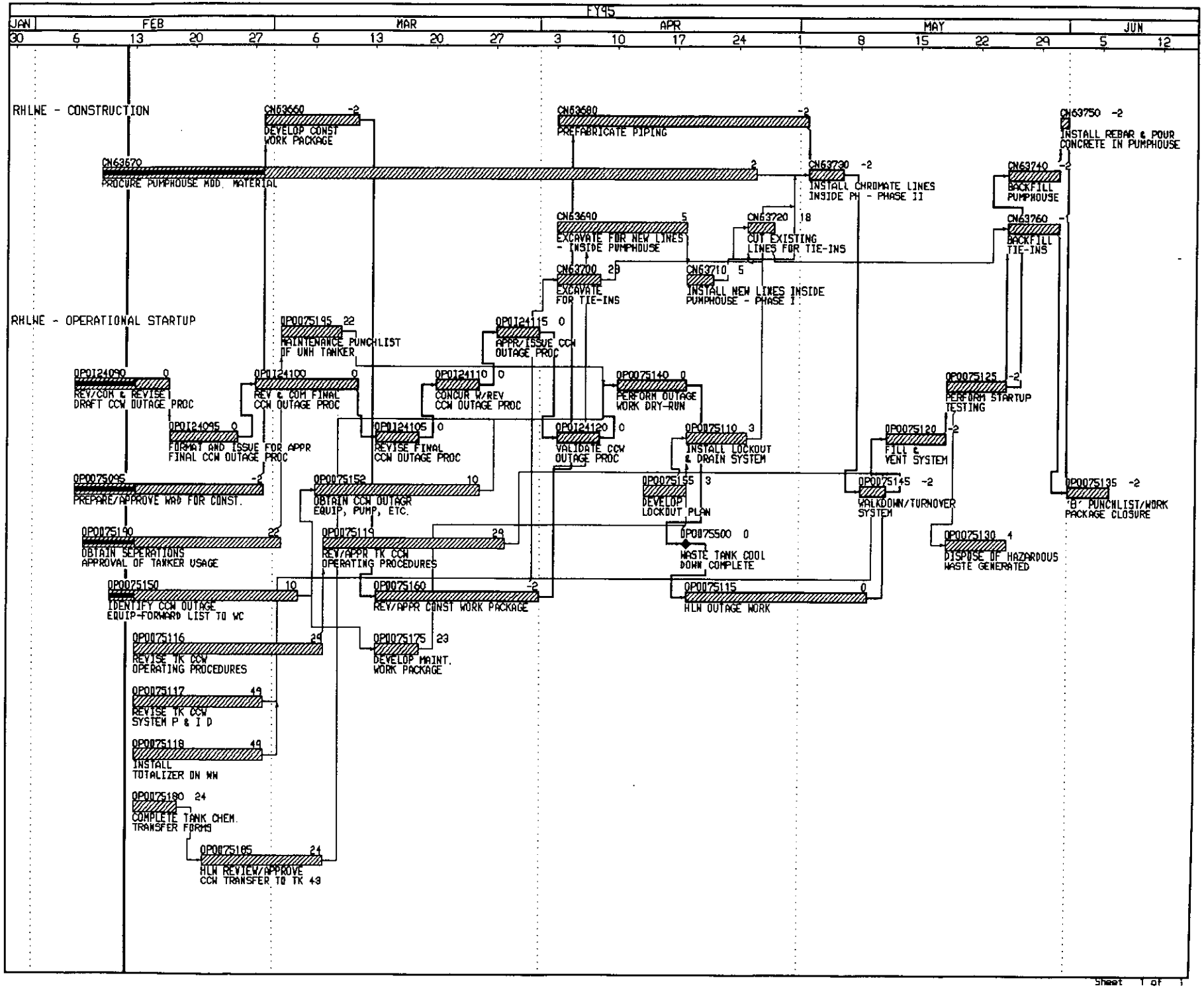
FY95
JAN
FEB
MAR
APR
MAY
JUN
30 6 13 20 27 6 13 20 27 3 10 17 24 1 8 15 22 29 5 12
RHLWE - CONSTRUCTION
CN63660 -2
DEVELOP CONST WORK PACKAGE
CN63680 -2
PREFABRICATE PIPING
CN63750 -2
INSTALL REBAR & POUR CONCRETE IN PUMPHOUSE
CN63670
PROCURE PUMPHOUSE MOD. MATERIAL
2
CN63730 -2
INSTALL CHROMATE LINES INSIDE PH - PHASE II
CN63740 -2
BACKFILL PUMPHOUSE
CN63690 5
EXCAVATE FOR NEW LINES - INSIDE PUMPHOUSE
CN63720 18
CUT EXISTING LINES FOR TIE-INS
CN63760 -
BACKFILL TIE-INS
CN63700 28
EXCAVATE FOR TIE-INS
CN63710 5
INSTALL NEW LINES INSIDE PUMPHOUSE - PHASE I
RHLWE - OPERATIONAL STARTUP
OP0075195 22
MAINTENANCE PUNCHLIST OF UNH TANKER
OP0124115 0
APPR/ISSUE CCW OUTAGE PROC
OP0124090 0
REV/COM & REVISE DRAFT CCW OUTAGE PROC
OP0124100 0
REV & COM FINAL CCW OUTAGE PROC
OP0124110 0
CONCUR W/REV CCW OUTAGE PROC
OP0075140 0
PERFORM OUTAGE WORK DRY-RUN
OP0075125 -2
PERFORM STARTUP TESTING
OP0124095 0
FORMAT AND ISSUE FOR APPR FINAL CCW OUTAGE PROC
OP0124105 0
REVISE FINAL CCW OUTAGE PROC
OP0124120 0
VALIDATE CCW OUTAGE PROC
OP0075110 3
INSTALL LOCKOUT & DRAIN SYSTEM
OP0075120 -2
FILL & VENT SYSTEM
OP0075095 -2
PREPARE/APPROVE WAD FOR CONST.
OP0075152 10
OBTAIN CCW OUTAGE EQUIP, PUMP, ETC.
OP0075155 3
DEVELOP LOCKOUT PLAN
OP0075145 -2
WALKDOWN/TURNOVER SYSTEM
OP0075135 -2
'B' PUNCHLIST/WORK PACKAGE CLOSURE
OP0075190 22
OBTAIN SEPERATIONS APPROVAL OF TANKER USAGE
OP0075119 29
REV/APPR TK CCW OPERATING PROCEDURES
OP0075500 0
WASTE TANK COOL DOWN COMPLETE
OP0075130 4
DISPOSE OF HAZARDOUS WASTE GENERATED
OP0075150 10
IDENTIFY CCW OUTAGE EQUIP-FORWARD LIST TO WC
OP0075160 -2
REV/APPR CONST WORK PACKAGE
OP0075115 0
HLW OUTAGE WORK
OP0075116 29
REVISE TK CCW OPERATING PROCEDURES
OP0075175 23
DEVELOP MAINT. WORK PACKAGE
OP0075117 49
REVISE TK CCW SYSTEM P & I D
OP0075118 49
INSTALL TOTALIZER ON WW
OP0075180 24
COMPLETE TANK CHEM. TRANSFER FORMS
OP0075185 24
HLW REVIEW/APPROVE CCW TRANSFER TO TK 43
Sheet 1 of 1

W-0517

Westinghouse
Savannah River Company

P.O. Box 616
Aiken, SC 29802

ESH-ESS-95-0012

January 11, 1995

Ms. M. C. Reece, District Director
Lower Savannah District Office
South Carolina Department of Health
and Environmental Control
218 Beaufort Street, NE
Aiken, SC 29801

Dear Ms. Reece:

REVISED CERTIFIED OPERATOR-IN-CHARGE FOR SAVANNAH RIVER SITE (SRS) WASTEWATER TREATMENT FACILITY (U)

Regarding the agreement between the Department and SRS, and as required by Part II(C) of the SRS National Pollutant Discharge Elimination System permit, enclosed is one copy of the subject form for the following facility:

- **F/H Tank Farm**

Questions may be directed to B. R. James (644-5746), SRS Operator Certification Coordinator, or W. L. Payne, SRS Wastewater Treatment Operations Coordinator (725-7312).

Yours very truly,

M. D. Dukes

M. D. Dukes, Manager
Environmental Support Section
Environmental Protection Department

WLP:cs
Enclosure

CC: R. W. Sherer, SCDHEC-Columbia
A. G. Linton, EPA Region IV
W. R. Moore, SC Environmental Certification Board

2

Westinghouse
Savannah River Company

P.O. Box 616
Aiken, SC 29802

Wastewater Treatment Facility

Environmental Quality Control Office
Lower Savannah River District
218 Beaufort Street, N.E.
Aiken, South Carolina 29801

Ref.

PERMIT 17,424-IW

PLANT F/H Tank Farm

OWNER U.S. Department of Energy

COUNTY Aiken, S.C.

The operator in charge of the above described plant will be Ricky J. Moxley who holds a valid "A" Physical/Chemical Waste Water treatment certification issued by the South Carolina Environmental Certification Board.

The plant will be operated in compliance with all state of South Carolina rules and regulations for Wastewater Treatment Facilities, and with all other operating and NPDES permit conditions.

In case of an emergency during non-working hours, R.J. Moxley/ R. Moxley may be reached at the following locations:

ADDRESS	PHONE
230 Cheves Cr. Rd. N.A., S.C. 29841	(803) 441-4112

Should the operator of this plant change for any reason, Westinghouse Savannah River Company will notify, in writing, the Lower Savannah district Environmental Quality Control Office and the Board of Certification. This individual has been informed that failure to properly carry out his/her duties as operator will result in the Environmental Quality Control Office requesting appropriate action by the South Carolina Environmental Certification Board, which could result in the revocation or suspension of his/her license.

M D Dukes

Date: 1/11/95

M.D. Dukes, Manager
Environmental Support Section
Environmental Protection Department

3

Ms. M. C. Reece
ESH-ESS-95-0012
January 11, 1995

BCC: H. L. Davis, DOE, 703-47A
L. S. Coward, 742-5A
W. L. Payne, 742-A
B. R. James, 992-2W, Room 221
R. J. Moxley, 241-28H
Records Administration, 773-52A
EPD File, 742-A

OSR 3-4A-W (Rev1-89)

WESTINGHOUSE SAVANNAH RIVER COMPANY

INTER-OFFICE MEMORANDUM

ESH-FSS-95-0019

January 12, 1995

TO: M. A. HUNTER, 703-7C

FROM: C. R. HAYES, 742-5A
(X5-8838)

SOUTH CAROLINA DEPARTMENT OF HEALTH AND ENVIRONMENTAL CONTROL (SCDHEC) APPROVAL OF HIGH LEVEL WASTE (HLW) TANK 24 REACTIVATION (U)

Attached is a copy of the SCDHEC letter approving of the Savannah River Site (SRS) proposal to return HLW Tank 24 to active service. Tank 24 may now begin receiving low activity wastewater only.

Please notice the two (2) conditions contained in the approval letter. Of particular importance is Condition #2, which states that all applicable requirements of the Federal Facility Agreement (FFA) and Construction Permit #17424-IW shall continue to be met.

If there are any questions regarding this letter, contact me at X5-8838.

CRH:sam
Attachment

CC: D. T. Bignell, 719-4A
W. B. Boore, 703-8C
N. R. Davis, 719-4A
W. D. Dunaway, 742-5A
A. R. Gough, 992-3W
E. R. Losure, 707-H
P. W. Norris, 707-H
J. V. Odum, 742-A
W. L. Payne, 742-A
R. Salizzoni, 707-H
C. B. Stevens, 742-6G
T. A. Syfert, 707-H
A. L. Towns, 704-S
M. N. Wells, 719-4A
Records Administration, 773-52A
EPD Fileroom, 742-A

South Carolina
DHEC
Department of Health and Environmental Control
2600 Bull Street, Columbia, SC 29201

Commissioner: Douglas E. Bryant

Board: Richard E. Jabbour, DDS, Chairman
Robert J. Stripling, Jr., Vice Chairman
Sandra J. Molander, Secretary

John H. Burriss
William M. Hull, Jr., MD
Roger Leaks, Jr.
Burnet R. Maybank, III

Promoting Health, Protecting the Environment

January 4, 1995

Mr. W.D. Dunaway, Manager
Permitting Field Support Group
Environmental Protection Department
Westinghouse Savannah River Co.
P.O. Box 616
Aiken, SC 29802

Re: Reactivation Of High Level Waste Tank 24
SRS H-Area
Aiken County

Dear Mr. Dunaway:

This letter is in response to your September 8, 1994 letter requesting concurrence with the plan to return Tank 24 to active service. Based on our review, this office concurs with the plan provided the following conditions are met:

1. Tank 24 shall receive only low activity waste.

2. All applicable requirements of the Federal Facilities Agreement and Construction Permit #17,424-IW shall be complied with.

If you should have any questions please call.

Sincerely,

Larry E. Arrington
Industrial & Agricultural
Wastewater Division

cc: Lower Savannah EQC

recycled paper

First

November 18, 1994

TO: DISTRIBUTION

CH

FROM: CHUCK HAYES, 742-5A

MINUTES FROM 11/17/94 WASTE REMOVAL PLAN AND SCHEDULE (P/S) UPDATE MEETING WITH SCDHEC

Please find attached the 11/17/94 meeting minutes from the Waste Removal update meeting with SCDHEC. Overall, SCDHEC was satisfied with SRS progress and paths forward.

Please contact me at 5-8838 if there are questions or comments.

DISTRIBUTION

D. T. Bignell, 719-4A
N. R. Davis, 719-4A
W. D. Dunaway, 742-5A
A. R. Gough, 992-3W
M. A. Hunter, 703-7C
C. Blair-McManus, 703-H
J. V. Odum, 742-A
C. B. Stevens, 742-6G
A. L. Towns, 703-47A
M. N. Wells, 719-4A

MEETING TO UPDATE SCDHEC ON SRS WASTE REMOVAL PLAN/SCHEDULE (P/S) FOR F/H HIGH LEVEL RADIOACTIVE WASTE TANK FARMS

11/17/94

MEETING MINUTES
(w/ attachments)

Meeting agenda, attendee list and slide handouts are attached.

INTRODUCTION

Chuck Hayes (WSRC-EPD) kicked off the meeting by briefly covering the planned agenda. Cynthia Blair-McManus, Cary Stevens and Michelle Wells were introduced to the SCDHEC Staff.

CURRENT P/S STATUS

Neil Davis (WSRC-HLW) presented this portion of the meeting. His slides are attached. SCDHEC questions/concerns are noted below.

SCDHEC QUESTIONS/CONCERNS

Larry Arrington asked whether the receipt of spent foreign fuel was included in our current planning forecast. Neil stated that future receipt of this fuel is not in the current forecast. Only the 400+ assemblies that we have received recently are included.

Larry also asked if there were no need for Pu Product, what do we plan to do with it? Will it be vitrified? It may require a RCRA of some type of permit for processing. The SRS response was as follows:

There is a lot of discussions going on relative to this issue. All possible avenues are being explored before any decisions are made. However, any need to process this material in the Tank Farms is expected to occur after waste removal of the current inventory.

Larry was very receptive to the proposals as outlined on Page 9 of Neil's handout.

Larry was concerned about the Tank 19 leak , as well as the leak detection capabilities of the Type IV Tanks in general. He stated that we should treat Tank 19 like the other "leakers" as far as the conditions of the wastewater permit are concerned.

Larry did state that the Tank 19 situation should not impact the "approvability" of the Tank 24 proposal.

PATH FORWARD / SUMMARY

Chuck re-stated the need for the approval letter on the status change of Tank 24.

SRS to treat Tank 19 like the other "leakers" as far as the conditions of the wastewater permit are concerned.

CONCLUSION

SCDHEC appeared satisfied with our progress and plans.

F/H HIGH LEVEL WASTE TANK FARM WASTE REMOVAL PLAN AND SCHEDULE UPDATE MEETING

11/17/94, 1:30
(Columbia, 2600 Bull Street)

AGENDA

- Introduction (5 Min) — Chuck Hayes

- Plan and Schedule Update / Discussion (30 Min) — Neil Davis

  - Review of Assumptions
  - Review of Issues
  - Progress since 7/94
  - Waste Removal End Dates
  - Proposal to Revise Order in Which Tanks are Removed From Service
  - RHLWE Status
  - Future Use of Tank 24

  - Discovery of Groundwater in Tank 19

- SCDHEC Questions, Comments, Concerns (10 Min) — Larry Arrington

- Path Forward (5 Min) — All

- Conclusion / Summary (5 Min) — Chuck Hayes

SRS ATTENDEES

NEIL DAVIS
CHUCK HAYES
CARY STEVENS
MATT HUNTER
TONY TOWNS
CYNTHIA BLAIR-McMANUS
MICHELLE WELLS

DHEC ATTENDEES

LARRY ARRINGTON
MELINDA VICKERS

FFA Waste Removal Plan & Schedule
Update Meeting with SCDHEC

Neil Davis
November 17, 1994

UNCLASSIFIED
DOES NOT CONTAIN
UNCLASSIFIED CONTROLLED
NUCLEAR INFORMATION
ADC &
Reviewing
Official: Mr. HLW II
(Name and Title)
Date: 11/17/94

Outline

- Review of Assumptions
- Review of Issues
- Progress since 7/94 Quarterly Update
- Proposal to re-sequence tanks to be removed from service
- RHLWE Status
- Discovery of groundwater inleakage to Tank 19
- Otehr Business

Review of Assumptions

- **General**
  - **no new technical issues**
  - **no new impacts from external reviews**
  - ***assumptions still valid***

- **Evaporators**
  - **each vessel fails once in next 5 years**
  - **Canyon waste per forecast**
  - ***1H Evaporator failed after 14 yrs service, no plans to repair and restart, work-arounds in progress***
  - ***Canyon assumption still valid 10/94 new forecast***

LARRY: PROCESSING Pu SOLUTIONS?

NRD: NOT IN FORECAST (ONLY 400 THAT HAVE ARRIVED SO FAR ARE INCLUDED)

- **Waste Removal**
  - **average const schedule 22-30 months**
  - **waste removal using water washing only** → "HOW CLEAN IS CLEAN" BEFORE TURN OVER TO D&D FOR FURTHER ACTION
  - ***assumptions still valid***

Review of Assumptions

- In-Tank Precipitation
  - Tank 41 can be processed in 30 months
  - ITP will operate per the current plan
  - geotechnical concerns will not delay startup
  - benzene abatement not required prior to startup
  - DCS concerns will not delay startup
  - *assumptions still valid although ITP startup delayed by ~9 weeks*

- Extended Sludge Processing
  - samples of tank contents are representative
  - *Tank 42 is not well mixed, corrective actions in progress, assumption still valid*

- DWPF/Late Wash
  - Safety Classification issues will not delay startup
  - emergent work will be less in the future vs the past
  - *assumptions still valid*

Review of Assumptions

- **Saltstone**
  - **vaults constructed on time**
  - **no Performance Assessment issues**
  - ***corrective actions to preclude rainwater intrusion into vault are complete, assumptions still valid***

Review of Issues

- **Tank 41 criticality could extend schedule**
  - *continuing analytical work favorable to this issue*

- **Geotechnical concerns could divert money and manpower from waste removal or delay it**
  - *ongoing geotechnical studies favorable to this issue*

- **Changes to Separations De-Inventory plans could change the amount and chemical composition of waste sent to the Tank Farm which could effect the Waste Removal Plan & Schedule**
  - *there has been significant activity on this issue*
  - *DNFSB recommendation to quickly and safely disposition in-process nuclear material*
  - *depending on method, could increase waste forecast*
  - *no reason to change current plans at this time*

LEA: WHAT DO YOU PLAN TO DO WITH R? RCRA? WASTE TREATMENT?

- **Analytical lab support may delay waste removal**
  - *lab improvements initiated, no change to this issue*

NRD: ANYTHING THAT WOULD HAPPEN HERE WOULD HAPPEN AFTER WASTE REMOVAL (AS FORECASTED)

Review of Issues

- Actual funding may be less than projected, thus delaying waste removal
  - *budget reduced by $287 M in FY95-00 causing a delay in the overall waste removal program*
  - *current projections show waste removal remains ahead of the FFA schedule*

- New NEPA Activities
  - recent proposal to develop an SEIS for DWPF and decision to develop a Programmatic EIS for Waste Management could result in an ROD that is counter to current plans or causes delays
  - *DWPF SEIS complete and approaching 12/94 ROD*
  - *WM EIS out for review*
  - *No problems foreseen at this time*

Progress Since 7/94

- 2F and 2H Evaporators operating well
- DWPF progressing on schedule for 12/95 startup*; 12 canisters of glass simulant poured, hydrogen/ammonia modifications outage in progress
- In-Tank Precipitation Westinghouse startup readiness reviews completed, startup projected 3/95
- SRS program to reduce waste removal cost developed and approved resulting in a $155M cost reduction

---

* Note: DWPF startup is defined as the start of the radioactive spike test

Proposal

SRS is exploring resequencing the order of tanks to be removed from service as a potential cost savings and to improve the schedule

- Cost savings could accrue:
  - if tank waste removal facilities could be designed, constructed and operated in clusters,
  - then the schedule to transition tanks to the D&D program could be improved

- The Waste Removal Schedule could be improved if:
  - cost is reduced
  - sludge could be removed from old-style tanks and consolidated into new tanks instead of the current plan of removing sludge immediately prior to preparing it for feed to DWPF
  - different batching scenarios could accelerate sludge batches 2 & 3

LARRY LIKES → THESE

- Resequencing <u>will not</u> be used to delay waste removal; if one waste removal tank is delayed, then another will be accelerated

RHLWE Status

- Construction progressing on schedule; approximately 40% complete
- Due to projected funding reductions, the project will be demobilized in FY96-97
- Startup date delayed from 11/97 to ~5/01
- IWW Construction Permit #17,424-IW requires construction completion by 1/1/98
- SRS considering completing construction on schedule but not starting up until ~5/01
- Permit to operate allows continued use of Tank 13 as long as RHLWE does not deviate from its approved schedule

  (Tank 13 was removed from active service when the 1H Evaporator was shut down earlier this year - there are no plans to re-activate Tank 13 at this time)

Tank 19

- Tank 19 is a single wall tank that is partially in the water table
- Tank contents are a 25,000 gallon heel of zeolite resin and 100,000 gallons of ballast water
- A damp spot on the interior wall of the tank well above the waste level was observed 10/94
- This anomoly was first observed in 1985, however, it quickly dissappeared and was not observed again until 10/94 (see Annual Tank Assessment Reports)
- Similar inleakage occurred in Tank 20 in 1987

Other Business

- Letter of concurrence requested regarding use of Tank 24 for dilute waste staging (Tank 24 is not in the water table similar to Tanks 19 and 20)

LCA: CONCERN ABOUT LEAK DETECTION CAPABILITY IN TANKS

- Waste Removal end dates:

  - FFA Waste Removal Plan and Schedule 2028
  - HLW System Plan, Rev. 4 (draft) 2020
  - HLW System Plan, Rev. 3 2018

- SRS is working to restore the 2018 schedule via cost savings initiatives and manpower reductions

Summary

- Significant progress on the startup of HLW facilities has been made
- Funding reductions have extended the projected FFA Waste Removal end date from the year 2018 to 2020
- Waste removal from Tanks 1-24 is still projected to be ahead of the FFA Waste Removal Plan and Schedule as submitted 11/93

W-0517

OSR 3-4A-W (Rev1-89)

WESTINGHOUSE SAVANNAH RIVER COMPANY

INTER-OFFICE MEMORANDUM

ESH-FSS-94-0542

September 21, 1994

TO: D. M. BLUE, 742-6G

FROM: C. R. HAYES, 742-5A
(X5-8838)

C R Hayes

SCDHEC APPROVAL FOR ALTERNATIVE INTEGRITY VERIFICATION FOR THE ITP FILTRATE LINES (U)

Attached is a copy of the SCDHEC letter approving of the SRS proposal to modify the hydrostatic testing frequency of the two ITP filtrate transfer lines. The filtrate lines must be tested once every two years, with the period between tests not to exceed 2.5 years.

Also, please notice the four (4) conditions contained in the approval letter. Of particular importance is Condition #3, which states that if a leak occurs, the line(s) must be replaced such that the FFA secondary containment requirements are met.

If there are any questions regarding this letter, contact me at X5-8838.

CRH:pr
Attachment

CC: C. J. Baker, 704-56H
D. T. Bignell, 719-4A
G. L. Cauthen, 241-119H
B. G. Croley, 241-120H
W. D. Dunaway, 742-5A
E. R. Ennis, 704-56H
A. R. Gough, 992-3W
M. A. Hunter, 703-7C
R. M. Satterfield, 719-4A
A. C. Smith, 706-21C
C. B. Stevens, 742-6G
A. L. Towns, 703-47A
W. M. Wierzbicki, 742-A
EPD Fileroom, 742-A
Records Administration, 773-52A

South Carolina
DHEC
Department of Health and Environmental Control
2600 Bull Street, Columbia, SC 29201

Commissioner: Douglas E. Bryant

Board: Richard E. Jabbour, DDS, Chairman
Robert J. Stripling, Jr., Vice Chairman
Sandra J. Molander, Secretary

John H. Burriss
William M. Hull, Jr., MD
Roger Leaks, Jr.
Burnet R. Maybank, III

Promoting Health, Protecting the Environment

2

RECEIVED
SEP 20 1994
ENVIRONMENTAL PROTECTION DEPT.
WESTINGHOUSE SAVANNAH RIVER CO.

September 15, 1994

Mr. W.D. Dunaway, Manager
Permitting Field Support Group
Environmental Protection Department
Westinghouse Savannah River Co.
P.O. Box 616
Aiken, SC 29802

Re: In-Tank Precipitation (ITP) Facility Filtrate Line Integrity Verification Requirements
SRS/F-Area
Aiken County

Dear Mr. Dunaway:

Per your May 31, 1994 letter, this office approves your request to perform hydrostatic testing of the two single-shelled filtrate transfer lines at the ITP facility once every two years with the testing period not to exceed 2.5 years. This approval is contingent on the following conditions:

(1) SCDHEC reserves the right to require more frequent testing of these lines as determined necessary.

(2) Should a leak occur in these lines, the line shall be replaced such that secondary containment requirements are met.

(3) Any requirements or agreements which require more frequent testing than required by this approval shall apply.

(4) All requirements of Construction Permit #17,424 shall be adhered to.

Should you have any questions, please call.

Sincerely,

Melinda G. Vickers

Melinda G. Vickers
Environmental Engineering Associate
Industrial and Agricultural Wastewater Division

cc: Lower Savannah EQC

recycled paper

3

Westinghouse
Savannah River Company

P.O. Box 616
Aiken, SC 29802

ESH-FSS-94-0304

May 31, 1994

Mr. L. E. Arrington, Engineer
Industrial and Agricultural Wastewater Division
South Carolina Department of Health
and Environmental Control
2600 Bull Street
Columbia, South Carolina 29201

Dear Mr. Arrington:

IN-TANK PRECIPITATION (ITP) FACILITY FILTRATE LINE INTEGRITY VERIFICATION REQUIREMENTS (U)

The Savannah River Site (SRS) intends to modify the frequency of the hydrostatic test of the two single shelled, filtrate transfer lines at the In-Tank Precipitation (ITP) Facility. Your approval is requested to decrease the integrity testing frequency in an effort to minimize exposure of personnel to radiation and unnecessary waste generation.

As outlined on pages 59-61 of the Phase I Tank Assessment Report submitted to SCDHEC as part of the Wastewater Permit Application Package for the F & H-Area High Level Waste Tank Farms, the filtrate transfer lines do not meet the secondary containment requirements of Appendix B of the Federal Facility Agreement (FFA). The lines are used to transport decontaminated salt solution from the cross flow filters to the benzene stripping columns within the ITP Facility. The filter cell walls and floor are constructed of stainless steel as is the stripper building floor - each providing secondary containment to their respective areas. However, the sections of piping leading from the filter cell to the stripper building are encased only within a concrete wall for approximately 35 feet. As discussed in the Tank Assessment Report, the plan was to hydrostatically test these lines to confirm their integrity once every cycle (approximately every 3-4 months). Additionally, to supplement the leak test, a radiologic survey of the outer surface of the filter cell concrete wall was to be performed.

However, it has since been determined that hydrostatic tests result in unnecessary radiation exposure to personnel and the creation of additional radioactive liquid waste. Part of the hydrostatic test requires the removal of the filter cell covers (shielding) to allow access to the lines. The more frequent the cell covers are removed, the greater the chance of personnel exposure. In order to keep exposure as low as reasonably achievable, an engineering evaluation was performed to determine if a more reasonable testing frequency, consistent with the vulnerability of the lines to various degradation mechanisms, could be technically justified. Over pressurization, mechanical damage, thermal damage, vibration induced fatigue, and stainless steel corrosion characteristics were each evaluated and determined to have negligible effects on the degradation of the lines. It has also been concluded that the radiologic survey serves no useful purpose in that a leak of low activity decontaminated salt solution would not be detected on the outside face of the three foot thick concrete wall. It should also be noted that a leak in one of these embedded lines could drain to a point where the line protrudes out of the concrete wall and into an area of secondary containment.

The ITP filters are expected to have a typical operative life of approximately 22 months. As such, SRS intends to test the filtrate lines once very 2 years, with the period between testing not to exceed 2.5 years. This frequency is consistent with the expected schedule for filter fouling and removal. At the time the filter is removed from the filter cell, the radiation hazards associated with these tests are greatly reduced and will thus promote "safer" conditions. In addition, the wastewater generated from conducting the hydrostatic tests will be reduced in equal proportion to the fewer number of tests. The radiologic survey of the filter cell wall will also be discontinued.

This matter has been discussed between yourself and Chuck Hayes. If you have any questions or concerns regarding this proposal, please contact Mr. Hayes at (803) 725-8838.

Yours very truly,

W D Dunaway

W. D. Dunaway, Manager
Permitting Field Support Group
Environmental Protection Department

CRH:pr

CC: M. C. Reece, SCDHEC, Lower Savannah District
A. B. Gould, 703-47A (2)

Letter, L. E. Arrington from W. D. Dunaway
ESH-FSS-94-0304, May 31, 1994

BCC:

C. J. Baker, 704-56H
D. T. Bignell, 719-4A
D. M. Blue, 742-6G
G. L. Cauthen, 241-119H
B. G. Croley, 241-120H
H. L. Davis, 703-47A
W. D. Dunaway, 742-5A
E. R. Ennis, 704-56H
A. R. Gough, 992-3W
C. R. Hayes, 742-5A
M. A. Hunter, 703-7C
R. M. Satterfield, 719-4A
C. B. Stevens, 742-6G
A. L. Towns, 703-47A
W. M. Wierzbicki, 742-A
EPD Fileroom, 742-A
Records Administration, 773-52A

3.2.3 Transfer System Integrity

Limit

L1. The primary containment on ITP/ESP waste transfer lines to and from Tanks 40, 41, 42, 48, 49, 50 and 51 shall be leak free during use.

L2. Leak Detection Boxes (LDBs) shall be FUNCTIONAL prior to performing transfers to and from Tanks 40, 41, 42, 48, 49, 50 and 51. The LDBs associated with the filter feed and return lines, the Tank 48 to Tank 49 line, the Tank 49 valve box to Tank 48 line, the two transfer pump to valve box lines on Tank 49 and the interconnection line in the Tank 49 valve box lines are excluded from this limit.

L3. The nitrogen pressure in the pipe jacket of filter feed and return lines shall be greater than or equal to 85 psig while the lines are in use for a transfer.

Required Settings

None.

Required Conditions

Limits L1 and L2 apply to Tanks 40, 41, 42, 48, 49, 50 and 51. Transfer of liquid radioactive waste to or from each tank must be in lines that have secondary containment (line jackets and valve boxes). Transfers between Tank 48 and filters cells are excluded from L2 because the LDBs for these lines are replaced by nitrogen pressure gauges. Also excluded from L2 are the Tank 48 to Tank 49 line, the Tank 49 valve box to Tank 48 line, the two transfer pump to valve box lines on Tank 49 and the interconnection line in the Tank 49 valve box because use of these lines is not permitted by Reference 6.

Limit L3 applies to filter feed and return lines.

Actions and Completion Times

A1. All waste transfers associated with Tanks 40, 41, 42, 48, 49, 50 and 51 must be stopped immediately for alarms of the applicable leak detection conductivity probe or other confirmation of a leak (including nitrogen pressure below L3).

A2. Deleted.

A3. Upon confirmation that a conductivity probe is not FUNCTIONAL, immediately stop all associated transfers, verify that there is no detectable radioactive leakage within 8 hours and restore probe within 24 hours. (This action does not apply to the filter feed and return lines.)

A4. Within 24 hours of violating L3, initiate an investigation of a potential leak of radioactive material into the pipe jacket.

A5. Following confirmation of a leak in a filter feed or return line, perform appropriate clean-up activities.

Surveillances

S1. Prior to transferring material and every 6 days thereafter during a transfer (e.g., affected transfer line segments and valve boxes) to or from Tanks 40, 41, 42, 48, 49, 50, and 51 (except for filter feed and return lines), perform a CONTINUITY CHECK on the conductivity probe of each leak detection box associated with the transfer.

S2. Annually perform an INSTRUMENT LOOP TEST of the conductivity probes associated with transfer line jackets and valve boxes of Tanks 40, 41, 42, 48, 49, 50, and 51 (except for filter feed and return lines).

S3. The secondary containment of each ITP/ESP line used in transfers to and from Tanks 40, 41, 42, 48, 49, 50, and 51 must have passed an integrity test within two years prior to the transfer. The secondary containment of the filter feed and return lines is excluded from this surveillance.

S4. Inspect the LDBs used in transfers to and from tanks 40, 41, 42, 48, 49, 50 and 51 to confirm LDB overflow plug position, drain plug position and probe height from the floor within two years of performing a transfer. The LDBs associated with filter feed and return lines are excluded from this surveillance.

S5. Prior to transfer, every 12 hours during transfer and immediately following transfer through filter feed and return lines, verify that the nitrogen pressure in the affected line pipe jacket(s) is greater than or equal to 85 psig.

Basis

No leaks from the primary barrier to the secondary are acceptable in transfer lines. Appendix B of the Federal Facility Agreement[2] (FFA) requires that ancillary equipment associated with the High Level Radioactive Waste Tanks must meet secondary containment standards as defined therein.

Surveillance requirement S1 frequency is based upon frequency specified in Ref. 6 for ITP precipitate lines (e.g., filter feed and return lines). Surveillance requirements S2 and S3 intervals for leak detection devices are based on the Tank Farm SAR[8].

Performing S1 on leak detection probes up to six days prior to transfer and every six days thereafter ensures that the alarm circuits are FUNCTIONAL and capable of alarming upon receiving a signal from the leak detection conductivity probe of a leak from the transfer line into the secondary jacket and then to the leak detection conductivity probe.

The FUNCTIONALITY of the leak detection probes shall be verified every year by performance of S2. The INSTRUMENT LOOP consists of the probe, associated wiring, sensing circuitry and alarms.

Surveillance S3, integrity testing of transfer lines, is based on past operating experience and practices[4,5]. The pressure test consists of pressurizing the jacket to 15±0.5 psig with gas, isolating the gas supply, and confirming that any pressure loss is less than 1 psi in 20 minutes.

Limit 2 and Surveillance S4 were added to ensure the integrity of LDBs and prevent non-routine occurrences caused by mispositioned LDB probes.

Limit L3 addresses leak detection controls on the filter feed and return lines between Tank 48 and the Filter Cells. Because a conductivity probe and LDB system would not detect all precipitate leaks, a nitrogen pressure leak detection is used in place of LDBs. The limit of 85 psig is based on the assumption that normal operating differential pressure on the process filters remains below 40 psig. Surveillance S5 ensures sufficient nitrogen pressure is maintained to indicate a leak in the precipitate transfer lines.

Uncertainties

The failure of a leak detection instrumentation could allow a leak to go undetected for a significant period of time. Additional administrative controls such as material balances performed for a transfer reduce the risk of an undetected leak to an acceptable level.

References

1. WSRC-SA-15, Safety Analysis Report "Additional Analysis for DWPF Feed Preparation By In-Tank Processing", Addendum 1, Revision 8, June 1995.

2. "Federal Facility Agreement Under Section 120 of CERCLA and Sections 3008(h) and 6001 of RCRA, Administrative Docket No: 89-05-FF", date stamped November 24, 1992. EPA transmittal letter DOE dated December 4, 1992. Became effective August 16, 1993.

3. "Tank Assessment Report for the F & H Area High Level Waste Tank Systems", August, 1991.

4. B. A. Phillips, "Waste Management High Level Waste Transfer Line Secondary Containment Leak Detection Program", NMP-WMT-91-0399, June 5, 1991.

5. D. L. Fisher, "Secondary Containment Integrity", IWT-STW-91-0065, May 23, 1991.

6. WSRC-RP-94-303, "Operational Safety Requirements, Savannah River Site, 241-82H Control Room (U)", Revision 15, April 1997.

7. R. Satterfield to B. Croley, HLW-REG-950033, "Tank 49 Valve Box Path Forward", February 16, 1995.

8. Safety Analysis - 200 Area Savannah River Plant, Separations Area Operations, Liquid Radioactive Waste Handling Facilities, DPSTSA-200-10, Supplement 18, August 1988.

WESTINGHOUSE SAVANNAH RIVER COMPANY

INTER-OFFICE MEMORANDUM

Reference 4

June 5, 1991

NMP-WMT-910399
Rev. 0
Key Words:
Tank Farms
Transfer Lines
241-H
241-F
Leak Tests

To: B. L. Lewis, 703-H

From: Bruce A. Phillips, 241-102H (7-8657) BAP

WASTE MANAGEMENT HIGH-LEVEL LIQUID WASTE TRANSFER LINE SECONDARY CONTAINMENT LEAK DETECTION AND TESTING PROGRAM (U)

SUMMARY

In December, 1988, Waste Management began a program to evaluate the integrity of all waste transfer line secondary containments in the F and H Area Tank Farms. An air pressure test is used to verify the integrity of carbon steel jacketed secondary containment systems. Since concrete encasements are not designed to hold pressure, a Justification for Continued Operation (JCO) is written to justify the use of the lines contained in these encasements. Transite jackets are also not pressure testable, but the entire line segments contained in these jackets are only used to transfer RBOF waste which is less than the 0.05 Ci/gal Technical Standard Limit that requires secondary containment.

The pressure testing frequency requirement has been set at once every two years. If a line has not been successfully pressure tested within the last two years, it will not be used unless a JCO is written or unless a one-time, immediate transfer, such as a flush of the core pipe to reduce radiation rates so the secondary containment can be repaired or a transfer to immediately return a facility to safe condition, is needed. Currently, methods to administratively implement this two year requirement are being developed. The status of the pressure testing program and a list of the current JCOs are shown in Tables I and III.

A task team with representatives from WMT, WMO, WMWE, WMP, Interim Waste Technology (IWT), and EES has been formed to develop a comprehensive design standard for secondary containment and leak detection for future installed lines and to develop recommendations for improving the existing secondary containment and leak detection systems throughout Waste Management.

BACKGROUND

The Waste Management Tank Farms contain more than 200 line segments used to transfer high-level radioactive waste. Secondary containment is provided for all of these line segments. The three types of secondary containment used are concrete encasements, transite jackets, and carbon steel jackets. Figures 1, 2, and 3 illustrate these types of secondary containment. Concrete encasements, which are the oldest form of containment and were installed with line segments for Types I and II tanks (c. 1950's), are only used for approximately 20 percent of the transfer lines. Transite jackets are only used for approximately 3 percent of the transfer lines and are located on line segments installed for Type IV tanks (c. late 1950's). The most recent type of secondary containment (c. 1960's to present) is carbon steel jackets which are used for the remainder of the transfer lines.[1]

Leaks are detected in all three types of secondary containment by leaked waste flowing to a collection point where a liquid detector (conductivity probe) or pneumatic dip tube senses the liquid. Leaked waste in concrete encasements and transite jackets collect in a catch tank or a sump. Leaked waste in carbon steel jackets collects in Leak Detection Boxes (LDBs), Modified Leak Detection Boxes (MLDBs), or Leak Probe Sleeves (LPSs). Figures 4, 5, and 6 illustrate LDBs, MLDBs, and LPSs. A carbon steel jacketed secondary containment system that collects in a LDB is shown in figure 7.

DISCUSSION

Leak Testing and Test Acceptance Criteria

On November 5, 1988, attempts to clear pluggage in a H-Area Pump Pits 5 and 6 (HPPs 5 & 6) Leak Detection Box (LDB) drain indicated that there was a leak in the LDB Drain Header. Investigation found corrosion of the LDB Drain Header at HPPs 5 & 6 that serves the waste headers from 221-H to HPPs 5 & 6. External corrosion from improper application of a protective coating was the cause.[2]

As a result of this incident, Waste Management began a program in December 1988 to test the integrity of all carbon steel jacketed waste transfer line secondary containments in the F and H Area Tank Farms. (The concrete encasements and transite jackets are not being pressure tested because they are not designed to hold air pressure.) A 15 psig air pressure test is used. During the test a portable air compressor delivers air through a portable air delivery system into the LDB via an LDB dip tube (Fig. 7). The air pressurizes the LDB, jacket, jacket drain line and the jacket vent line. Once the air pressure reaches 15 psig, the air supply valve is closed and the pressure is monitored for 20 minutes. If the pressure drops less than 1 psi in 20 minutes, the secondary containment is considered successfully pressure tested and is released to continue use in radioactive service. This 1 psi allowable pressure drop was selected because experience has shown that a failed jacket/LDB system drops over 1 psi in 20 minutes and only tiny leaks at screwed connections drop less than 1 psi in 20 minutes. It was necessary to implement

this criteria because it is impossible to detect tiny leaks through the underground LDB drain and overflow screwed connections which lead to a containment sump. Calculations were also made by Interim Waste Technology (IWT) which demonstrated that a 1 psi drop in 20 minutes corresponds to a 0.008 inch diameter hole.[3] If the pressure drops more than 1 psi in 20 minutes and no leaks are found at the various screwed connections, leaks from the secondary containment are assumed and steps are initiated to locate the leak.

The first method used to locate the leak is wetting the ground above the transfer line with soapy water, particularly at either end, and looking for bubbles. If bubbles are not seen, helium or sulphur hexafluoride is introduced into the secondary containment as a tracer gas and air samples are taken from small holes bored in the ground above the transfer line until the helium is sensed. Once the location of the leak is found, the piping is excavated and repaired. All corrosion problems are investigated by SRL-Equipment Engineering Section (EES) to determine the cause and to help prevent reoccurrence in the replacement pipe.

In January 1991 it was recommended that a line must have been successfully pressure tested within the last year before it could be used.[3] After reevaluating Waste Management's current manpower and other resources, the requirement for pressure testing transfer lines was set at once every 2 years. After results from future testing are obtained, the frequency of testing will be reevaluated and appropriately changed if necessary. If a line has not been successfully pressure tested within the last 2 years, a Justification for Continued Operation (JCO) will be written before transferring through the line. Table I lists the current lines approved for use under a JCO and the JCO expiration date. Once a permanent testing schedule is developed, Waste Management will attempt to test active lines once every year, but the requirement will remain at once every 2 years.[5] The spreadsheet and tickler system being established to periodically pressure test all carbon steel jacketed line segments will allow this 2 year frequency to be exceeded as long as the test is complete within the calendar month that it came due for testing.

If a transfer line, which has failed the secondary containment pressure test, must be used for a one-time, immediate transfer, such as a flush of the core pipe to reduce radiation rates so the secondary containment can be repaired or a transfer needed for immediate return to safe condition of a facility (e.g., removal of rainwater accumulation, waste removal from a leaking tank, etc.), a JCO will not be written to use the line. However, the following questions will be addressed. Can shielding be used to eliminate flushing? Can core pipe integrity be verified? Can the leak site be located? Can the leak site be isolated and/or monitoring of the leak site area be enhanced?[6]

Self Critique and Ongoing Improvements

In March, 1991 a self-critique of the secondary containment pressure testing program was performed by WMO and WMT representatives. The major problem identified and addressed was implementation of the 2 year testing requirement. Standardization of the air pressure rig design and air testing procedures between both areas was also discussed, and the acceptance criteria of 1 psi drop in 20 minutes was agreed upon at this time. The acceptance criteria and standardization of the air testing procedures have already been implemented. Table II lists the remaining improvements to be implemented to the pressure testing program as a result of this critique.

To administratively implement this pressure testing program, a controlled spreadsheet is being developed which will list all jacketed secondary containment systems, the date they were last tested, whether or not they passed the test, and any comments about the test. This spreadsheet will be maintained as an operator aid, approved by the Facility Manager of each area, and available during all shifts. A WMO Leak Test Coordinator will be provided in each area and will be responsible for field work, updating the spreadsheet, and maintaining a file of latest data sheets of pressure tests. Transfer procedures and other procedures referring to the transfer of waste through a process line (i.e., evaporator operation, Canyon waste receipts, etc.) will contain a step requiring that WMO verify all transfer lines being used during that procedure have been successfully pressure tested within the last 2 years.

Testing Status

Since the concrete encasements cannot be pressure tested, JCOs are required to use these lines. Two flowing water tests have been completed for the H Area concrete encasements. During these tests a measured amount of water was introduced into the encasement and the amount that collected in the catch tank was measured. For the two tests, 93 and 97 percent of the water introduced in the encasement was collected in the catch tank, verifying the integrity of the encasement. Wetting of the concrete and instrumentation inaccuracy accounted for the losses.

The only active lines encased in transite jackets are used for RBOF waste transfers. The Curie content of this waste is less than the 0.05 Ci/gal Technical Standard Limit which requires secondary containment; therefore, no plans to pressure test or write a JCO to operate these lines have been made.

The total number of carbon steel jacketed secondary containment systems in F and H Area is 180 (Table III). 107 have been successfully pressure tested since December 1988. Approximately 22 lines have failed pressure tests due to corrosion. Eleven of those failures have been repaired. Nearly all corrosion failures have been located on the jacket vents, jacket drain lines, or LDB dip tubes. These are small diameter carbon steel lines coated in Bitumastic (coal-tar coating). The jacket is surrounded by Gilsulate (hydrophobic, insulating powder). The Tank 37 CTS loop

line is the only corrosion failure which has been located on a jacket and the mode of failure there has not yet been determined.

Thirty-four lines would not pressurize because they were designed with jacket terminations which could not be easily sealed. Most of these are asbestos packing joints (Fig. 8), Gravity Drain Line (GDL) expansion joints open to the annulus, and jackets open to valve boxes. Design changes have been made to 5 asbestos packing joints, and they subsequently passed the pressure test. Work is scheduled to correct the remaining asbestos packing problems, and the valve box joints will be modified on current and future Waste Removal Projects. There are no plans to modify the four active GDL expansion joint jackets because there are only a few feet of process line on each expansion joint that are outside the annulus wall of the tank.

Leak Detection Task Team

A task team has been formed to: (1) develop a comprehensive design standard for secondary containment and leak detection for future installed radioactive waste transfer lines in Waste Management; (2) evaluate the reliability of the existing secondary containment and leak detection systems; (3) make recommendations for improving these existing systems. The team consists of representatives from WMT, WMO, WMWE, WMPC&I, SRL-Interim Waste Technology (IWT), and EES.[7]

The task team has developed an alternate method of using the existing jacket/LDB systems without relying on the LDB drain lines to remove any collected liquid, since there is a strong possibility that these lines have corrosion problems identical to the corrosion found in the jacket vent and drain lines. These changes to existing systems are being implemented in line segments deemed necessary by management.[8]

Currently, the task team is evaluating the reliability of the existing leak detection methods and developing the design of secondary containment and leak detection for future installed transfer lines. To evaluate the existing leak detection methods, SRL-IWT is preparing to perform a simulated waste flow experiment to determine how well leaked waste will flow to the leak detection point in the existing secondary containment systems. The findings from this experiment will dictate the changes to existing systems necessary to improve the reliability of detecting leaks.[9] For future installed lines, the task team has decided to have moisture sensitive cable installed throughout the entire length of the jacket and a constant, continuous pressure maintained in the jackets. This design will enable core pipe or jacket failures to be immediately detected. The design details needed to implement these leak detection methods in future installed line segments are being developed and will be formally reported when they are complete.[10] The design standard for future installed lines should be complete by the end of June, 1991 and the improvements to existing secondary containment systems will be documented in July, 1991.

References:

[1] DPSTSA-200-10 Sup-18, Safety Analysis - 200 Area Liquid Radioactive Waste Handling Facilities, August 1988.

[2] WMI 88-11-23, "LDB Drain Header Leak," December 9, 1988.

[3] D. L. Fisher to B. A. Phillips, "Secondary Containment Integrity," May 23, 1991.

[4] NMP-WMT-910012, M. J. Rea to R. W. Wilson, et. al., "Leak Detection and Secondary Containment Improvement Programs," January 7, 1991.

[5] M. J. Rea to B. L. Lewis and M. A. Ceravolo, "H-Area Secondary Containment Air Pressure Testing Update," April 11, 1991.

[6] B. A. Phillips to B. L. Lewis, "Use of Transfer Lines with Failed Secondary Containment," May 7, 1991.

[7] B. A. Phillips to B. L. Lewis and M. A. Ceravolo, "Mission of Leak Detection Task Team," November 1, 1990.

[8] NMP-WMT-910181, B. A. Phillips to R. W. Wilson, et. al., "Abandoning Leak Detection Box Drain and Overflow Lines," March 1, 1991.

[9] NMP-WMT-910101, B. A. Phillips to M. G. Looper, "Simulated Waste Flow Experiment," January 30, 1991.

[10] B. A. Phillips to R. W. Wilson, et. al., "Leak Detection and Secondary Containment Design Standard Update," March 20, 1991.

TABLE I

Line Segments Approved for Use Through JCOs

Line Segment	Use	Expiration Date
H-Area		
HDB-7 Sump to Tank 38	To empty sump	7-31-91
2H Evaporator GDL to Tank 38	To lift concentrate from evap pot during operation	7-31-91
Concrete Encased Lines (Type I and II Tanks)	Primarily for waste removal	None
F-Area		
FDB-3 to/from Tanks 33 and 34	High Heat Waste receipt	5-2-92
1F Evaporator Lift Line	To empty 1F Evaporator pot * and F-CTS	4-3-92
F-CTS to Valve Box	To empty 1F Evaporator pot * and F-CTS	4-3-92
Valve Box to FDB-6	To empty 1F Evaporator pot * and F-CTS	4-3-92

* The 1F Evaporator and Concentrate Transfer System (CTS) are not in service. These lines were used once to empty the pot of water added to it when the evaporator was initially taken out of service and to empty rainwater accumulation from the CTS. There are no plans to put more water in the pot. However, the CTS may have to be emptied occasionally because rainwater enters the evaporator and CTS sumps and is jetted to the CTS tank.

Improvements Planned for Secondary Containment Pressure Testing Program

Develop and implement tickler system to test jacketed secondary containment systems once every 2 years.

Develop an operator aid spreadsheet, which will be a controlled document, showing status of pressure tests of all carbon steel jacketed line segments.

Revise transfer procedures to verify, using the operator aid spreadsheet, that line segments have been successfully pressure tested within the last 2 years prior to the transfer.

Appoint a WMO leak testing coordinator in each area to coordinate leak testing field work and maintain documentation.

Standardize the design of the air testing rig to be identical in both areas.

TABLE III

Status of Pressure Testing Carbon Steel Jacket Secondary Containment Systems *

	F-Area	H-Area
Total # of Jacket Containment Systems	84	96
Total # of Jacket Containment Systems Tested since Beginning of Program	61	57
# Successfully Pressure Tested	55	52
# Successfully Pressure Tested within the Last 2 Years	50	30
# of Piping Failures Remaining to be Repaired	6	5
# of Piping Failures Repaired since Beginning of Program	3	8
Total # of Piping Failures Encountered since Beginning of Program	9	13
Total # of Design Problems Encountered since Beginning of Program	17	17
# of Design Problems Modified	0	5
# of Design Problems Remaining to be Modified	17	12
# of Lines (with no design problems) Remaining to be Tested **	6	27

* This table illustrates the status of the air pressure testing program as of April 19, 1991.

** There are no current plans to use these lines any time soon.

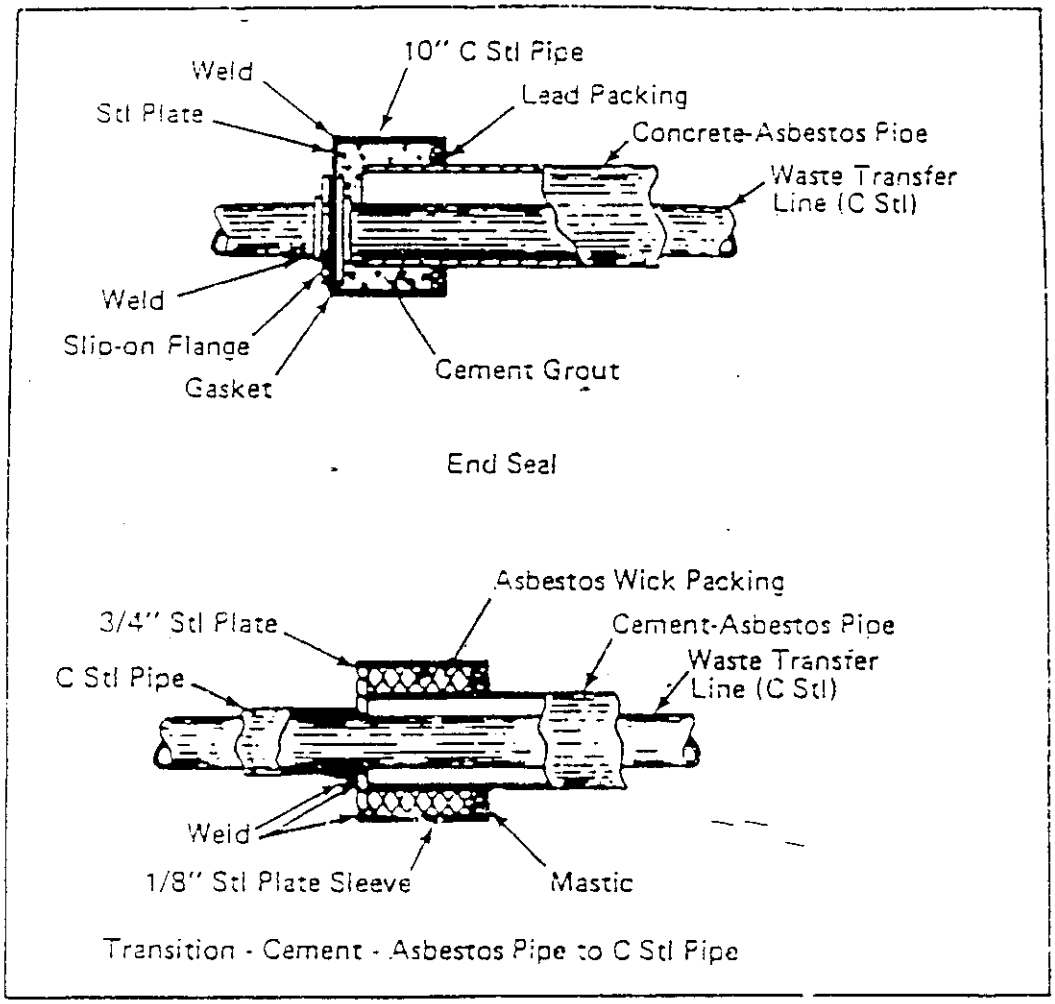

FIGURE 3-49. Type III-A Line Encasement (Concrete-Asbestos Jacket Special Fittings)

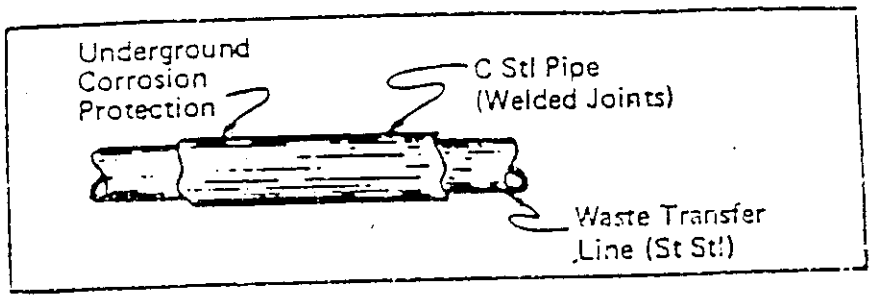

FIGURE 3-47. Type II Line Encasement (Carbon Steel Jacket)

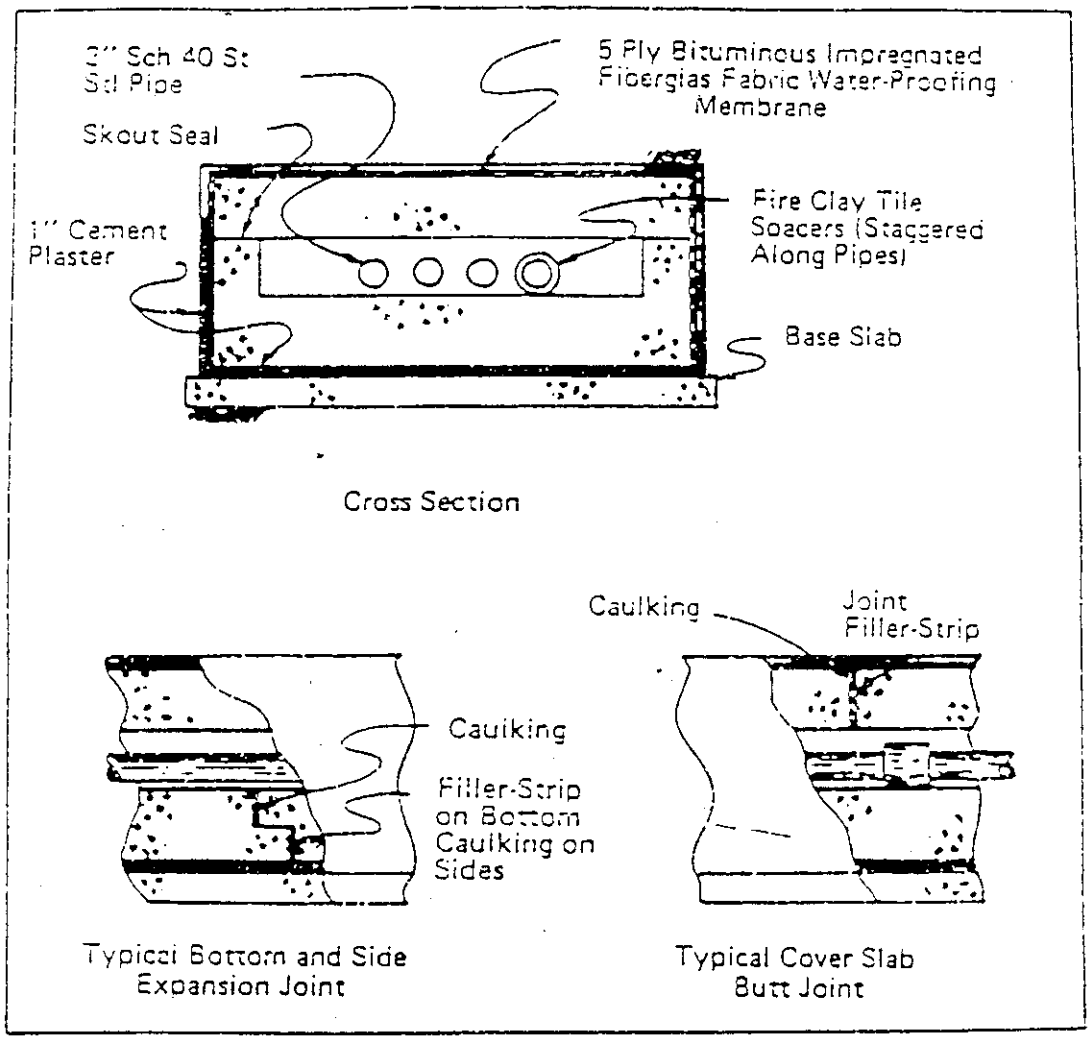

FIGURE 3-46. Type 1 Line Encasement (Sealed Concrete Trench)

DO NOT REMOVE From SRS
Without Approval

TYPICAL LEAK DETECTION BOX (LDB)

* Denotes Revision to this DPSOL

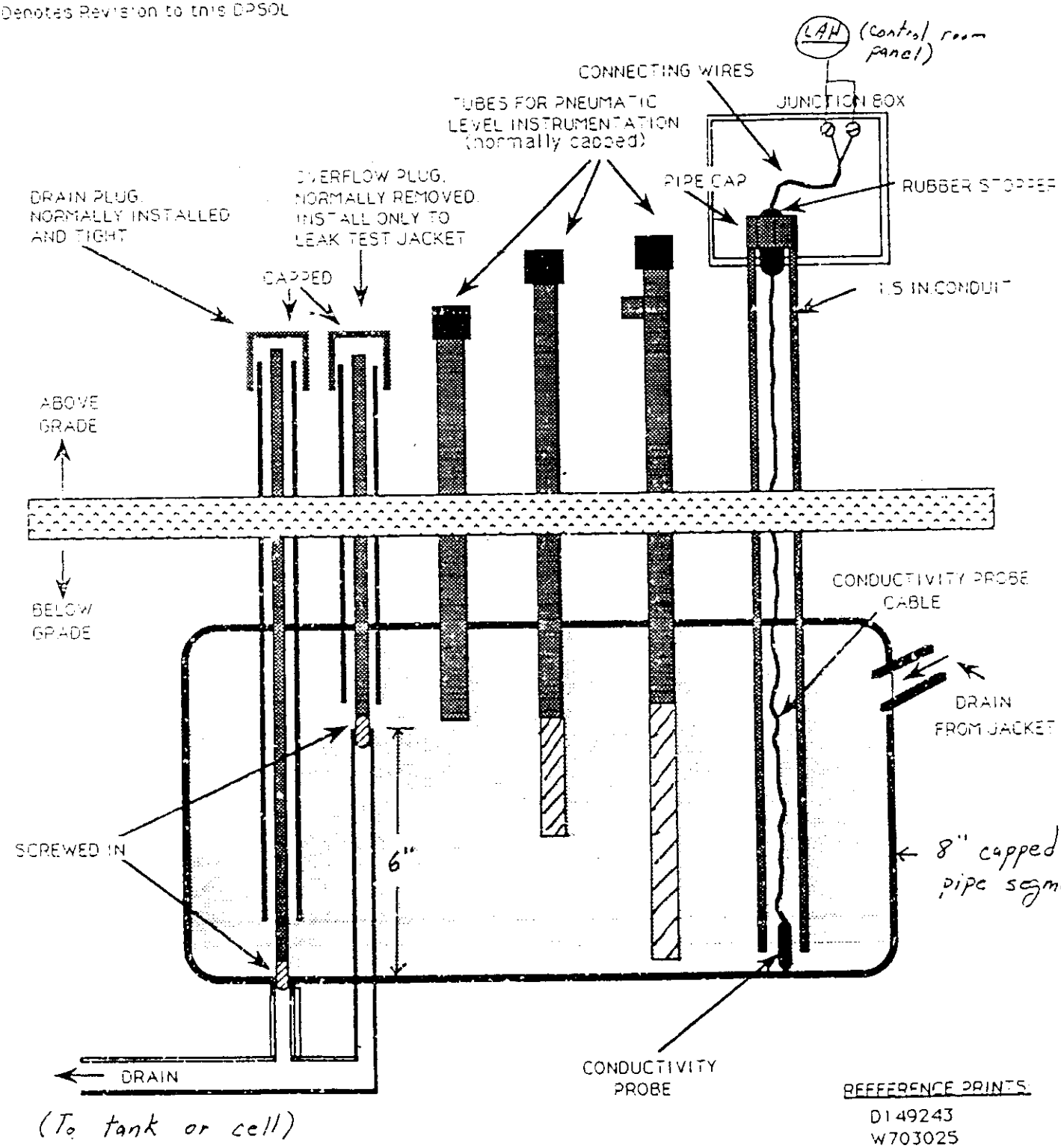

REFERENCE PRINTS:
D149243
W703025
W715343
W701427

138-8-FH-62

MODIFIED LEAK DETECTION BOX (U)

* Denotes revision to this PROCEDURE

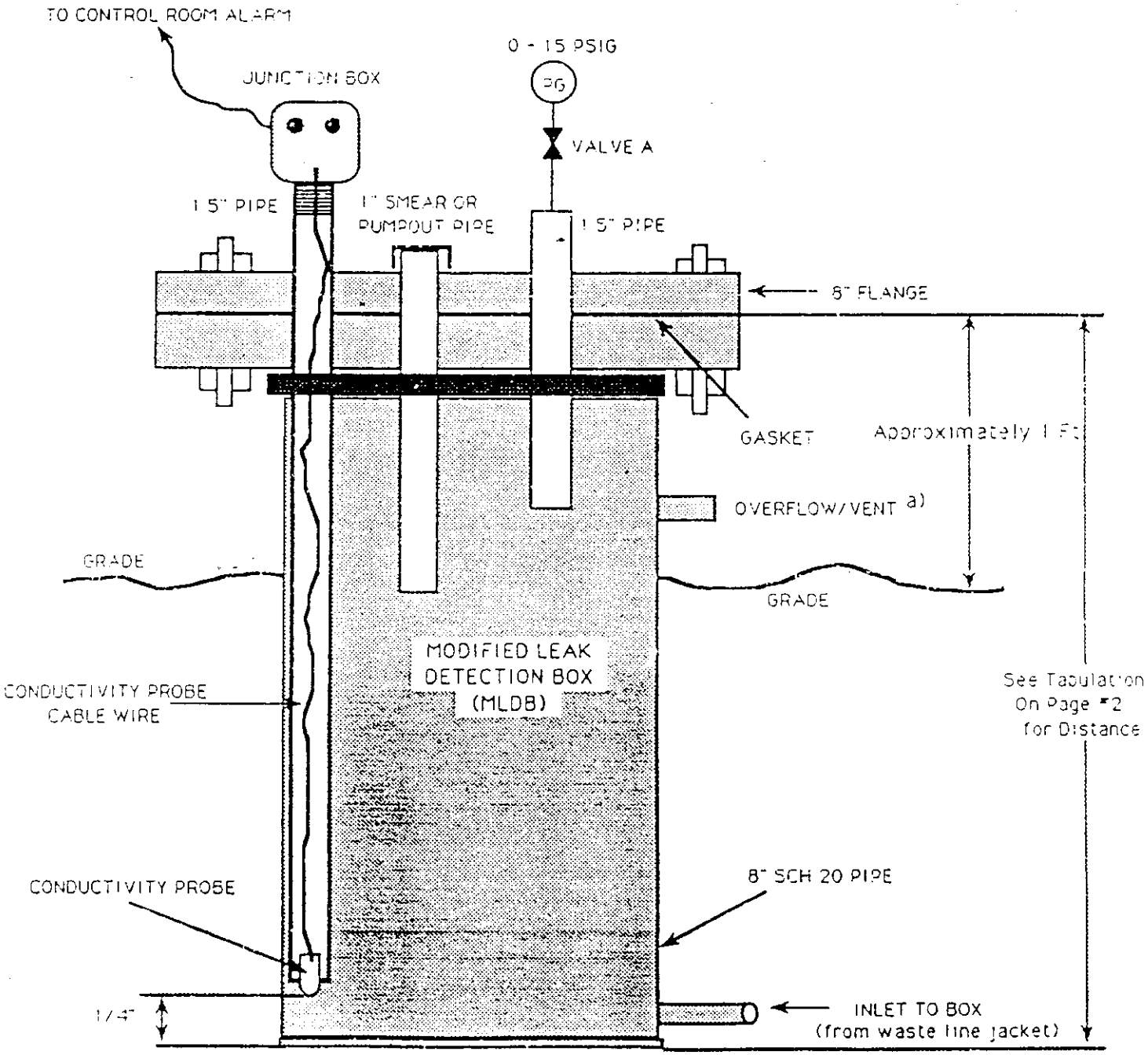

* a) All MLDB's overflow to diversion boxex or pump pits except MLDB #13 (tank 20, northwest riser)

REFERENCE
W702976

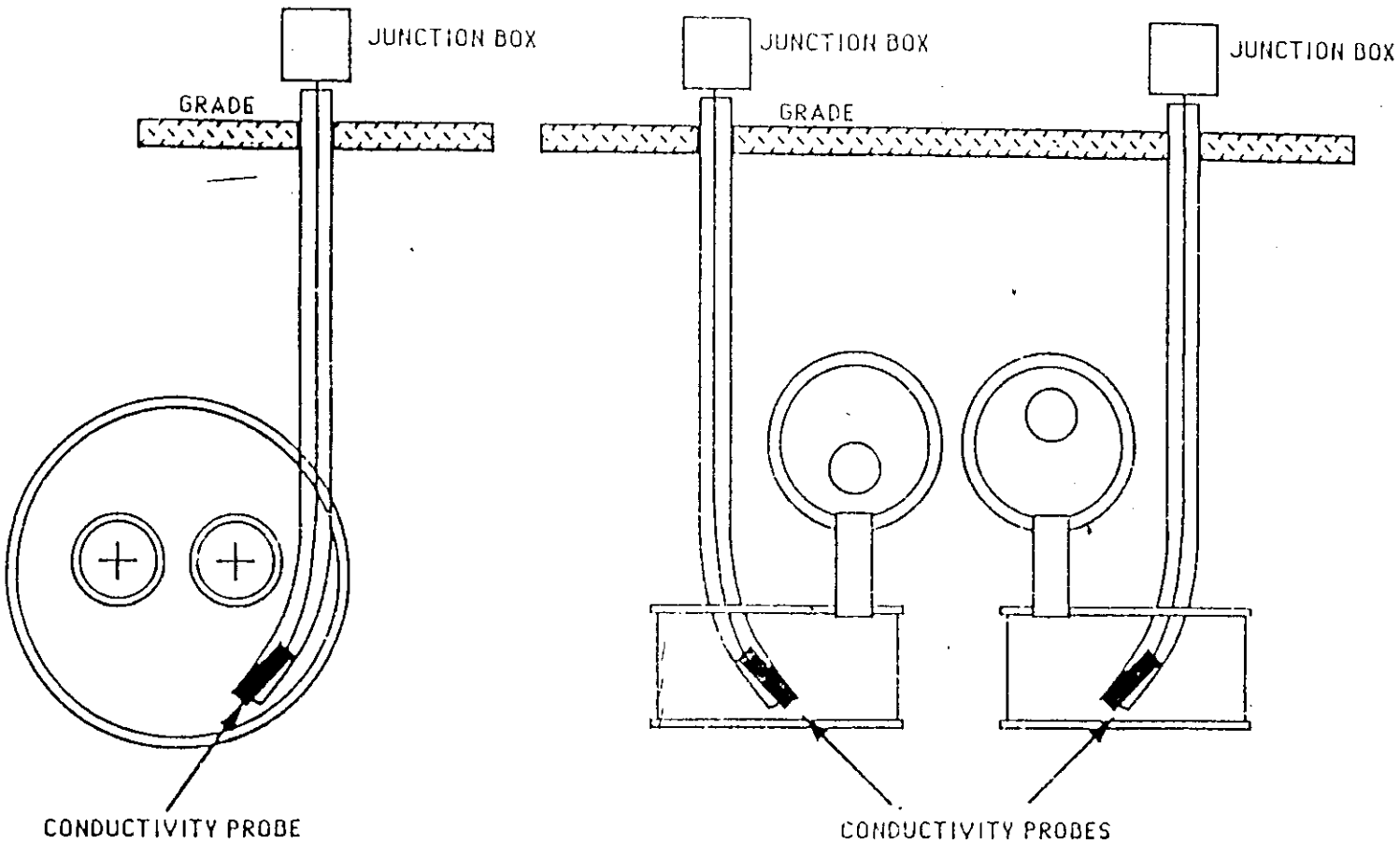

TYPICAL LEAK PROBE SLEEVES (H-AREA ONLY)

138-8-H-362

Revision 1
Approval Date 5/9/91
Category 3
Manual SW1.10
WMO
Page 1 of 1

JACKET/LDB AIR PRESSURE LEAK TESTING EQUIPMENT SETUP (U)

* Denotes Change To This Procedure

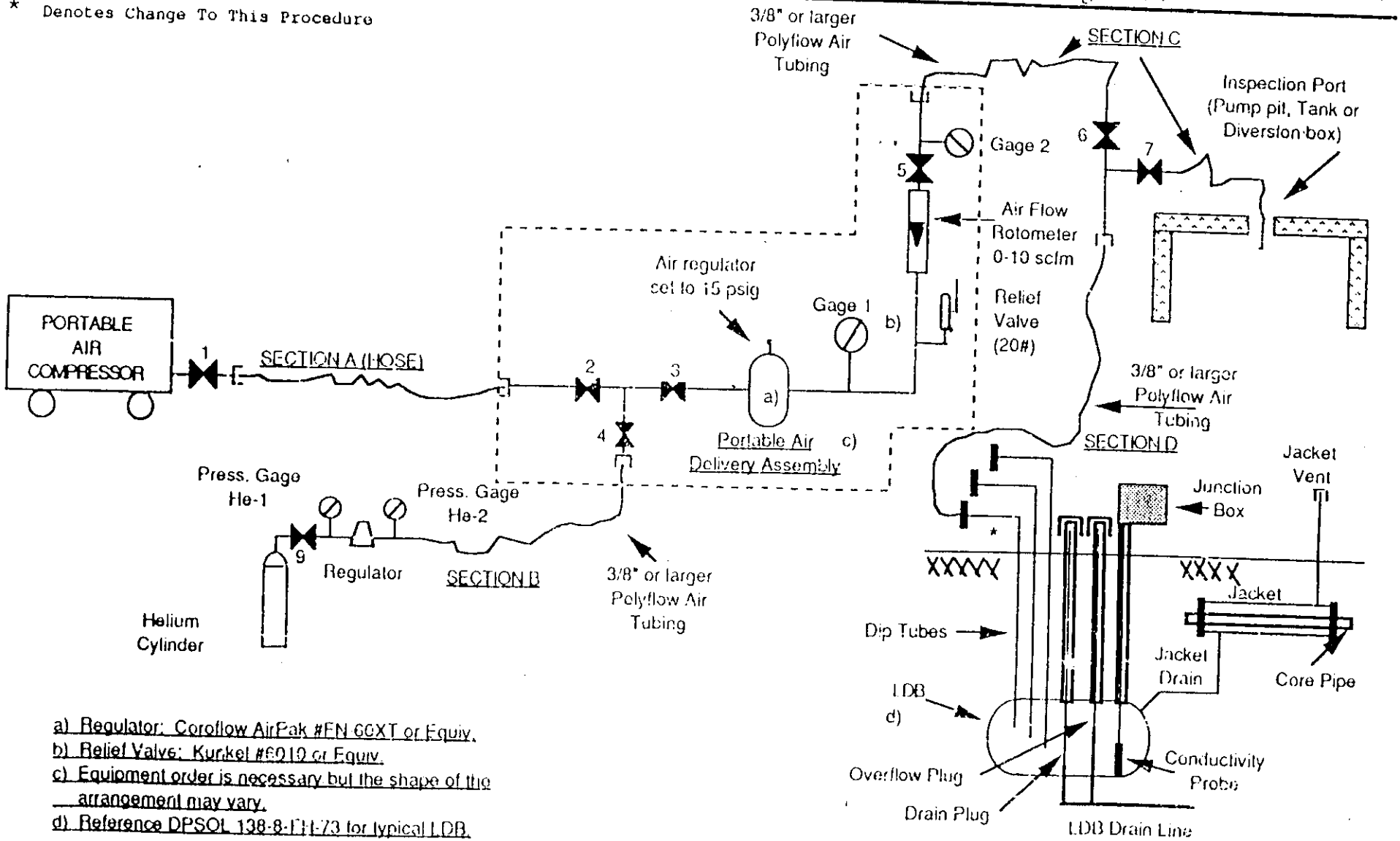

a) Regulator: Coroflow AirPak #EN 60XT or Equiv.
b) Relief Valve: Kunkel #6010 or Equiv.
c) Equipment order is necessary but the shape of the arrangement may vary.
d) Reference DPSOL 138-8-EH-73 for typical LDB.

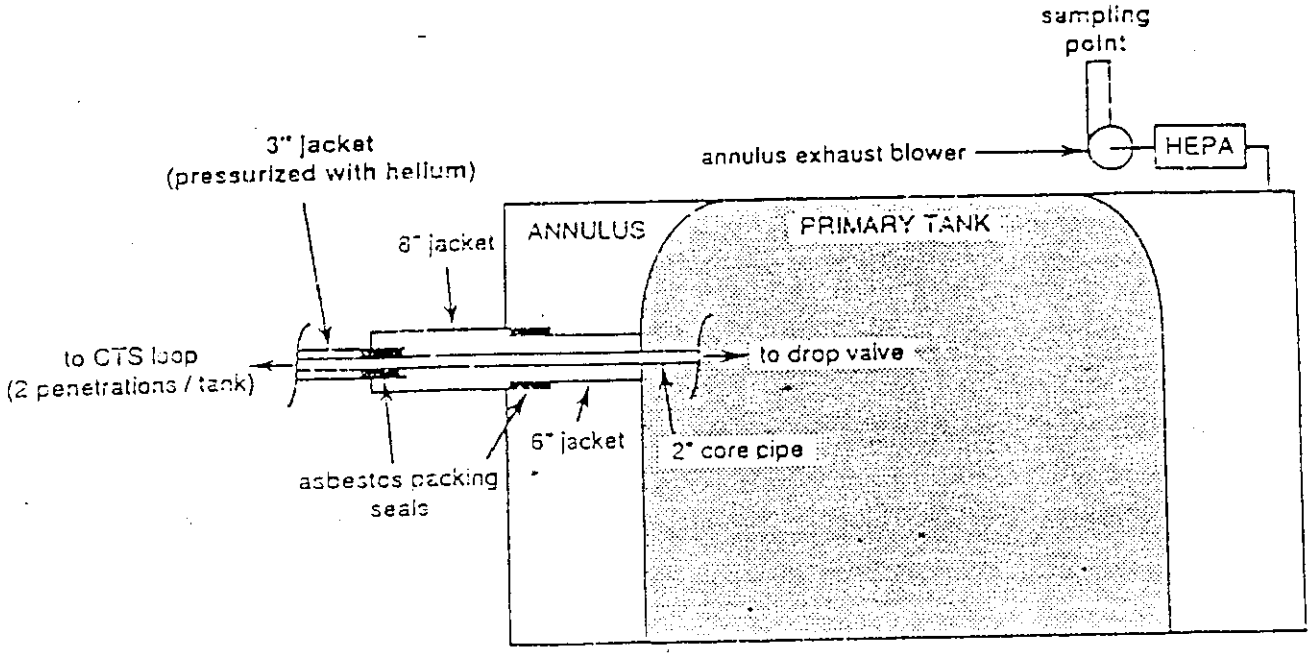

Tanks 29-32 CTS Loop Jacket Seals,
Reference W235519 & D139405

Schematic Diagram of H-Area Waste Line Jacket Helium Tracer Test.

OSR 3-4A-W [Rev1-89]

Leak Section
14041
Reference 5

WESTINGHOUSE SAVANNAH RIVER COMPANY

INTER-OFFICE MEMORANDUM

May 23, 1991

IWT-STW-91-065

TO: B. A. Phillips, 241-102H

FROM: D. L. Fisher, 676-1T DLF

Secondary Containment Integrity (U)

Marshall Looper (IWT) asked me to address a question you had about the secondary containment leak test. I took the information you gave him and came up with an answer based on some simplifying assumptions. Using the given volume, the hole diameter which will allow the annulus pressure to drop 1 psi in 20 minutes is about 0.008 inches. The solution is included for your records.

Given:

annular volume	= 20 gallons
gas	= air at 65 °F and15 psig
allowable pressure drop	= 1 psig in 20 minutes

Assume:

- A hole in the secondary containment pipe can be modeled as an orifice flow device
- flow through the orifice is reversible adiabatic expansion
- the pressure drop in the annulus is negligible for flow calculations (i.e. assume it is a reservoir at a constant pressure of 15 psig).
- the ambient pressure (P_3) outside the containment is less than the critical pressure of the orifice (i.e. the orifice area is the flow limiting factor)

Solution:

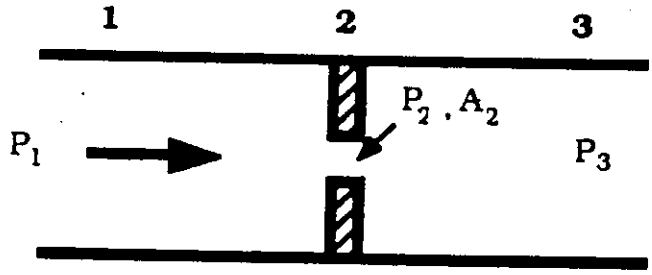

When P_3 is less than the critical pressure of the orifice (as assumed), the flow rate becomes independent of downstream pressure (i.e. dependent on orifice area A_2) and

$$m = k\,C\,P_1 \frac{A_2}{\sqrt{T_1}} \qquad \text{(Marks' Handbook, p. 4-47)}$$

where: m = mass flux (lb/s)
k = ratio of critical pressure to inlet pressure (constant = 0.53)
C = empirically determined discharge coefficient (0.6 standard for orifice flow devices)
P_1 = air pressure at 1 (15 psi = 2160 lb/ft^2) representing the pressure in the annulus
A_2 = orifice area (ft^2)
T_1 = air temperature at 1 (65 °F = 524.7 Rankine)

All quantities are known or can be found with the information given, *except* the orifice area, so

$$A_2 = \frac{m\sqrt{T_1}}{k\,C\,P_1}$$

The mass flux may be found using the ideal gas law and the pressures and volume given. Determine the volume of gas lost from the annulus:

$$P_1 V_1 = P_2 V_2$$

(29.7 psia)(144 in^2/ft^2)(20gal)(1/7.4805gal/ft^3)=(28.7 psia)(144 in^2/ft^2)V_2

V_2 = 2.767 ft^3

$V_2 - V_1$ = (2.767 - 2.674) ft^3 = 0.0932 ft^3 (@ 28.7 psia)
= 0.1820 ft^3 at ambient pressure (14.7 psia)

The density of air at STP is 0.0752 lb/ ft^3, so

(0.182 ft^3)(0.0752 lb/ft^3) = 0.0137 lb of air flow in 20 minutes, or

m = 1.14x10^{-5} lb/s

$$\text{so} \quad A_2 = \frac{1.14 \times 10^{-5}\sqrt{525}}{0.53\ (0.6)\ 2160} = 3.8 \times 10^{-7}\ \text{ft}^2$$

Last

and the diameter (d) of the orifice is

$$d = \sqrt{\frac{4\,A}{\pi}} = 7 \times 10^{-4}\ \text{ft}\ \left(\frac{12\ \text{in}}{\text{ft}}\right) = 0.008\ \text{in}$$

If you have any questions please call and I will be glad to help.

CC: M. G. Looper,676-1T

Westinghouse
Savannah River Company

P.O. Box 616
Aiken, SC 29802

ESH-FSS-94-0486

September 8, 1994

Mr. L. E. Arrington, Engineer
Federal/Energy/Pretreatment Section
Industrial and Agricultural Wastewater Division
South Carolina Department of Health
and Environmental Control
2600 Bull Street
Columbia, South Carolina 29201

Dear Mr. Arrington:

REACTIVATION OF HIGH LEVEL WASTE TANK 24 (U)

Ref.: Construction Permit #17424-IW

In an effort to utilize the available waste tank storage space in the H-Area Tank Farm, SRS intends to return High Level Waste Tank 24 to active service. This re-activation is necessitated by the recent failure of the 242-H (1H) Evaporator system and the subsequent decision not to repair and restart the evaporator. Per your request in the 7/27/94 Waste Removal Plan and Schedule update meeting, your concurrence with the plan to return Tank 24 to active service is hereby requested.

Tank 24 belongs to a cluster of Type IV tanks (Tanks 21-24) in the H-Area Tank Farm. Tanks 21-23 currently receive low activity waste consisting primarily of washwater, collected rain water inleakage and/or wastewater generated at the Receiving Basin for Off-Site Fuel and the Resin Regeneration facility. It is proposed that Tank 24 also be used to store this type of dilute wastewater on an as-needed basis. Tank 24 is listed as "inactive" on page 130 of the referenced permit application package because, at the time, there was no foreseen need for additional storage space. However, due to the failure of the 1H Evaporator system, additional storage space for low activity waste is now needed.

The SRS feels that this change falls under the "normal operations" category in the referenced permit application and, thus does not require a permit modification. Further, no revisions to the Waste Removal Plan and Schedule, submitted to your Office in November, 1993, are necessary as a result of this re-designation.

Please contact Chuck Hayes (725-8838) if there are any questions.

Yours very truly,

W D Dunaway

W. D. Dunaway, Manager
Permitting Field Support Group
Environmental Protection Department

CRH:pr

CC: M. C. Reece, SCDHEC, Lower Savannah District
A. B. Gould, 703-47A (2)

2

Letter, L. E. Arrington from W. D. Dunaway
ESH-FSS-94-0486, September 8, 1994

BCC:

D. T. Bignell, 719-4A
W. B. Boore, 703-8C
H. L. Davis, 703-47A
N. R. Davis, 719-4A
A. R. Gough, 992-3W
C. R. Hayes, 742-5A
M. A. Hunter, 703-7C
E. R. Losure, 707-H
C. B. McManus, 704-S
P. W. Norris, 707-H
W. L. Payne, 742-A
R. Salizzoni, 707-H
C. B. Stevens, 742-6G
A. L. Towns, 704-S
T. A. Syfert, 707-H
W. M. Wierzbicki, 742-A
Records Administration, 773-52A
EPD Fileroom, 742-A

TONY,

HERE IS THE LETTER WE DISCUSSED BY PHONE. PLS. LET ME KNOW IF OK OR IF YOU WANT FORMAL CONCURRENCE.

THANKS.

CHUCK HAYES
9/6/94

Westinghouse
Savannah River Company

P.O. Box 616
Aiken, SC 29802

ESH-FSS-94-0486

September 1, 1994

Mr. L. E. Arrington, Engineer
Federal/Energy/Pretreatment Section
Industrial and Agricultural Wastewater Division
South Carolina Department of Health
and Environmental Control
2600 Bull Street
Columbia, South Carolina 29201

DRAFT

Dear Mr. Arrington:

REACTIVATION OF HIGH LEVEL WASTE TANK 24 (U)

Ref.: Construction Permit #17424-IW

In an effort to utilize the available waste tank storage space in the H-Area Tank Farm, SRS intends to return High Level Waste Tank 24 to active service. This re-activation is necessitated by the recent failure of the 242-H (1H) Evaporator system and the subsequent decision not to repair and restart the evaporator. Per your request in the 7/27/94 Waste Removal Plan and Schedule update meeting, your concurrence with the plan to return Tank 24 to active service is hereby requested.

Tank 24 belongs to a cluster of Type IV tanks (Tanks 21-24) in the H-Area Tank Farm. Tanks 21-23 currently receive low activity waste consisting primarily of washwater, collected rain water inleakage and/or wastewater generated at the Receiving Basin for Off-Site Fuel and the Resin Regeneration facility. It is proposed that Tank 24 also be used to store this type of dilute wastewater on an as-needed basis. Tank 24 is listed as "inactive" on page 130 of the referenced permit application package because, at the time, there was no foreseen need for additional storage space. However, due to the failure of the 1H Evaporator system, additional storage space for low activity waste is now needed.

The SRS feels that this change falls under the "normal operations" category in the referenced permit application and, thus does not require a permit modification. Further, no revisions to the Waste Removal Plan and Schedule, submitted to your Office in November, 1993, are necessary as a result of this re-designation.

Please contact Chuck Hayes (725-8838) if there are any questions.

TONY SAYS OK TO SEND IF ADD C.B. McMANUS TO CC LIST!

Yours very truly,

W. D. Dunaway, Manager
Permitting Field Support Group
Environmental Protection Department

CRH:pr

CC: M. C. Reece, SCDHEC, Lower Savannah District
A. B. Gould, 703-47A (2)

2

Letter, L. E. Arrington from W. D. Dunaway
ESH-FSS-94-0486, September 1, 1994

BCC:

D. T. Bignell, 719-4A
W. B. Boore, 703-8C
H. L. Davis, 703-47A
N. R. Davis, 719-4A
A. R. Gough, 992-3W
C. R. Hayes, 742-5A
M. A. Hunter, 703-7C
E. R. Losure, 707-H
P. W. Norris, 707-H
W. L. Payne, 742-A
R. Salizzoni, 707-H
C. B. Stevens, 742-6G
A. L. Towns, 704-S
T. A. Syfert, 707-H
W. M. Wierzbicki, 742-A
Records Administration, 773-52A
EPD Fileroom, 742-A

DRAFT

C. B. MEYMANDI, 704-S

EPD-FSS
FIELD VISIT REPORT

(REV. 0, 6/10/91)

DISTRIBUTION:

Permit File #W-0517
J. Carroll, 717-9N
M. A. Hunter, 703-7C
J. Ledbetter, 707-2H
C. B. Stevens, 742-6G

EPD REPRESENTATIVE	SECTION (FSS Or FSG)	DATE	TIME STARTED	TIME ENDED	TOTAL TIME IN HRS
C. R. Hayes CR Hayes	PFSG	8/24/94	9:30 AM	11:30 AM	2.0

FIELD CONTACT NAME (Location, Phone #)	FIELD CONTACT DEPT
M. A. Hunter, 703-7C, 7-6416	HLW-EC

OTHER PARTICIPANTS(Name, Department, Location, Phone #)

J. Carroll, 717-9N, 7-4675
J. Ledbetter, 707-2H, 7-1554

LOCATION

Replacement High Level Waste Evaporator (RHLWE)

PURPOSE OF VISIT

Perform interim construction inspection of RHLWE (Construction Permit #17424-IW)

FIELD VISIT SUMMARY

Construction is approximately 35-40% complete.

Were able to see the following:

- The 2 overheads receiver tanks, condenser and mercury collection pot; Also saw the stainless steel cell liners
- Portion of fabrication and excavation to support the gravity drain (and cleanout and return lines) line to/from Tank 37
- Portion of excavation/installation to support the feed line (and return lines) from/to Tank 32
- Stormwater control system was pointed out
- Work being performed on steam supply and exhaust/filter systems
- Piping work package (w/work performed to date)
- Pathway in which the Overheads line will be routed to the ETF Process Sewer Line

To date, all looks OK. Will perform at least one more interim inspection.

ACTION REQUIRED? (YES OR NO) Yes

IF YES DESCRIBE:

EPD to perform at least one more interim inspection.

HIGHLIGHTED ITEM? (YES OR NO) No

W-0529
W-0517

INTER-OFFICE MEMORANDUM
Savannah River Site

22-Aug-1994 02:09pm EDT

To:	Joseph Carroll	(CARROLL-J-Z7084 @A1@SRXSS2)
To:	Bharat R. Damani	(DAMANI-BR-Y4387 @A1@SASRS2)
CC:	Troy Hoover	(HOOVER-TS-Y8803 @A1@SRXSS2)
CC:	Marshall S. Miller	(MILLER-MS-Y4500 @A1@SASRS2)
From:	Chuck Hayes	(HAYES-CR-Z9722)
Dept:	EPD	
Tel :	7258838	

FINAL INSPECTION OF APP BYPASS PROJECT (U)

Per conversation with SCDHEC-Lower Savannah District today, no SCDHEC final inspection or written approval is necessary for the APP Bypass Project. I, however will perform a final inspection of the project. I also need PE certified "as-built" drawings and acceptable pressure/leakage testing results prior to granting the authority to place the lines in service.

Please remember that a final inspection and a permit-to-operate must be issued for the Latewash Project before it can be placed in service.

Please let me know if there are any questions.

INTER-OFFICE MEMORANDUM
Savannah River Site

18-Aug-1994 04:08pm EDT

To:	Todd Wright	(WRIGHT-GT-T6181 AT A1 AT SASRS0)
CC:	CARY B. STEVENS	(STEVENS-CB-O5981 @A1@SASRS2)
CC:	Matthew A. Hunter	(HUNTER-MA-L2335 @A1@SASRS2)
CC:	Chuck Hayes	(HAYES-CR-Z9722)
From:	M.D. Dukes for J.S. Roberts	(ROBERTS-JS-O5782)
Dept:	EPD	
Tel :	725-1728	

Sent By: M. J. McMillan

RE: ITP RSA Finding

EPD has a complete copy of the ITP application. To our knowledge no one has requested it. Matt Hunter of HLW environmental group has several copies. Please check with your personnel.

WMW action please

INTER-OFFICE MEMORANDUM
Savannah River Site

18-Aug-1994 08:32am EDT

To: J. S. (Jack) Roberts [ENV PROT] (ROBERTS-JS-05782 @A1@SLSRP1)

CC: CARY B. STEVENS (STEVENS-CB-05981 @A1@SASRS2)

From: Todd Wright (WRIGHT-GT-T6181 AT A1 AT SASRS0)
Dept: Waste Management
Tel : 7-1527

Sent By: Ginny Ellis

ITP RSA Finding

We have "A" finding that WSRC does not have a complete copy of the permit application that was submitted to EPA/DHEC for ITP. The finding says that these records cannot be found. This is an item that needs to be resolved before startup as well as starting our ORR. It needs to be resolved as soon as possible. Please take care of this.

W-0517

Westinghouse
Savannah River Company

P.O. Box 616
Aiken, SC 29802

ESH-ESS-94-0325

June 20, 1994

Ms. M. C. Reece, District Director
Lower Savannah District Office
South Carolina Department of Health
and Environmental Control
218 Beaufort Street, NE
Aiken, SC 29801

Dear Ms. Reece:

REVISED CERTIFIED OPERATOR-IN-CHARGE FOR SAVANNAH RIVER SITE (SRS) WASTEWATER TREATMENT FACILITY (U)

Regarding the agreement between the Department and SRS, and as required by Part II(C) of the SRS National Pollutant Discharge Elimination System permit, enclosed is one copy of the subject form for the following facility:

- **In-Tank Precipitation Facility**

Questions may be directed to B. R. James (644-5746), SRS Operator Certification Coordinator, or W. L. Payne, SRS Wastewater Treatment Operations Coordinator (725-7312).

Yours very truly,

M. D. Dukes, Manager
Environmental Support Section
Environmental Protection Department

WLP:cs
Enclosure

CC: R. W. Sherer, SCDHEC-Columbia
A. G. Linton, EPA Region IV
W. R. Moore, SC Environmental Certification Board
A. B. Gould, DOE-ECD, 703-47A

Westinghouse
Savannah River Company

P. O. Box 616
Aiken, SC 29802

2

Environmental Quality Control Office
Lower Savannah District
218 Beaufort Street, N. E.
Aiken, South Carolina 29801

Ref:

Wastewater Treatment Facility

PERMIT	17424-IW
PLANT	IN-TANK PRECIPITATION FACILITY
OWNER	U. S. DEPARTMENT OF ENERGY
COUNTY	AIKEN, SC

The operator-in-charge of the above described plant will be Mr. Rheo. E. Meador who holds a valid "A" PHYSICAL/CHEMICAL WASTEWATER treatment certification issued by the South Carolina Environmental Certification Board.

The plant will be operated in compliance with all State of South Carolina rules and regulations for Wastewater Treatment Facilities, and with all other operating and NPDES permit conditions.

In case of an emergency during non-working hours, Mr. Rheo. E. Meador may be reached at the following location:

ADDRESS	**PHONE**
1001 Neilson St. Aiken, S.C. 29803	803-649-7300

Should the operator in charge of this plant change for any reason, Westinghouse Savannah River Company will notify the Lower Savannah District Environmental Quality Control Office and the Board of Certification in writing. This individual has been informed that failure to properly carry out his/her duties as operator will result in the Environmental Quality Control Office requesting appropriate action by the South Carolina Environmental Certification Board, which could result in the revocation or suspension of his/her license.

M D Dukes

M. D. Dukes, Manager
Environmental Support Section
Environmental Protection Department

DATE: 6/20/94

Ms. M. C. Reece
ESH-ESS-94-0325
June 20, 1994

BCC: H. L. Davis, DOE, 703-47A
L. S. Coward, 742-5A
W. L. Payne, 742-A
B. R. James, CCC-2, Room 221
R. E. Meador, 241-197H
D. Blue, 241-152H
Records Administration, 773-52A
EPD File, 742-A

WESTINGHOUSE SAVANNAH RIVER COMPANY

INTER-OFFICE MEMORANDUM

ENGINEERING & PROJECTS DIVISION
PROJECTS MANAGEMENT DEPARTMENT

EPD-RHE-94-0041

June 8, 1994

TO: DISTRIBUTION

FROM: MIKE BLACKBURN MJB
704-60H

S-4062 - REPLACEMENT HIGH LEVEL WASTE EVAPORATOR
REPLANNING MEETING NOTES (U)

Attached are the notes from our meeting held on Wednesday, June 1, 1994.

1. S-2860 Interfaces

- Forecast LSC award for Control House = 6/15/94.
- Forecast T/O of Control House to Operations = 5/15/95.
- Next S2860/4062 Interface meeting is tentatively scheduled for 9:00 am, 6/8/94 in 704-61H .
- K. Weis took an action to review page 3 of 19 of the meeting handout to confirm completeness of the list for S-2860 interfaces and their associated dates.
- HLWO needs to provide a complete list of items being performed by S-2860 required to support start-up testing and operation of S-4062.

2. S-3291 Interfaces

- Per R. Wilson, the need for Tk. 29 is being driven by the long-lead time required to remove the salt from the tank because of its high curie concentration. It is not needed in the near-term as a RHLWE drop tank.
- HLWO's proposed plan is for RHLWE to use Tk. 30 in lieu of Tk. 29 as the first drop tank. Initial indications are that no cooling coils will have to be removed from Tk. 30; however, 4 additional coils will have to be installed.
- A DCF will be required to revise the FPR. Based on that DCF, a Level 2 BCP will be processed and additional design work will have to be performed by ESI.

3. Permitting

- Tie-in to ETF process sewer will require a waste water collection/transmission permit modification prior to beginning construction of the sewer line.

- Forecast issuing application for the above permit to SCDHEC within next 2 weeks and anticipate approval within 6-8 weeks.

- NESHAPS Sampling Protocol letter has been submitted to SCDHEC.

- Permitting Plan issue forecast 6-30-94 which will support incorporation of any required permits into the replanning of the IPS.

- Per M. Hunter, the Power Services Utilization Permit (s) are not needed until we are ready to tie-in to the 13.8 kv feed, steam lines, etc.

4. Technical Safety Requirements

- HLWO agreed to incorporate the current strategy utilizing TSR's in lieu of the TF SAR into the replanning of their portion of the IPS as soon as the letter to DOE-SR is finalized.

5. Hot Tie-Ins

- Per R. Wilson, Tk. 35 will be deleted from our project scope.

- A DCF will be required to revise the FPR. Based on that DCF, a Level 2 BCP deleting Tank 35 GDL will be processed.

6. Replan IPS Schedule Status

- Estimating needs the following in order to complete the to-go T2 Construction Estimate:
  - Mark-up of drawings to reflect installed quantities for the period 2/94-5/94.
  - Need DCF'S (which have now been provided)
  - Craft Support
  - EMCAP by Control Account
  - Non-manual

- Estimating also needs the following to complete the to-go T2 Estimate:
  - Task analysis for PM, Systems Engineers, Project Controls and Design Engineers.
  - PESC estimate.

- To-date, Construction has received only 2 packages from Estimating for review to confirm incorporation of their comments. PM requested that remaining packages be issued to Construction individually as soon as they become available.

- Forecast Estimating will issue final to-go T2 Construction Estimate by 6/7/94 (1 week slip).

7. Engineered Material

- A separate meeting needs to be scheduled to address such issues as those noted below:

  - Identification of those items deemed as major/critical that will be included in the schedule.

  - Resource loading activities in the schedule and CAP'S.

  - Material Status Report.

- Construction requested a list of all equipment and instruments that are being procured as engineered material.

8. Construction to Start-up Logic Ties

- It was agreed to use the existing generic 4 activity "OP" logic (see attached). It was proposed that these activities be renumbered as Construction (CN) activities.

- In order to retain the Start Up/Operations resources and activity coding already loaded against the existing "OP" activities, the renumbering to "CN" activities should be made in the Master Project schedule file.

A schedule update meeting is scheduled for Wednesday, 15 June 1994, 1 - 3 PM in 704-61H. The purpose of the meeting is to get an understanding of where each organization stands on their schedule development and to address issues and problems.

W-0517
4

DISTRIBUTION:

R. Alley, Westgate
Ozzie Ardan, 966W-401
John Bartus, 704-60H
Mike Blackburn, 704-60H
C. J. Boasso, 704-60H
Kenneth R. Brown, 704-60H
D. Bumgardner, 707-2H
Rob Chmura, 704-56H
Jerry Edmunds, 704-60H
Paul Forbes, 704-61H
Chuck Hayes, 742-5A
Matt Hunter, 703-7C
J. Iwert, 966W-401
R. Kanas, 742-2G
M. Keefer, 241-119H
Dennis Kuhl, 704-56H
D. Martin, 707-2H
James McAndrews, 703-5C
D. T. O'Rear, 742-2G
Mark Pelicone, 742-2G
Dusty Rhodes, Westgate
John Serago, 704-56H
P. Unnikrishnan, 742-2G
Karl Weis, 703-5C
David Whitehead, 703-8C
William Wiginton, 966W-401
P. Williams, 704-61H
R. Wilson, 742-2G

INTER-OFFICE MEMORANDUM
Savannah River Site

01-Jun-1994 06:54am EDT

To: See Below

From: Douglas M. Blue (BLUE-DM-L4808 AT A1 AT SASRS2)
Dept: HLWEC
Tel : 5578088

Closure of SAIC Environmental Assessment Findings for ITP (U)

In the summer of 1993, Waste Management (WM) contracted Science Applications International Corporation (SAIC) to evaluate the environmental compliance status of the In-Tank Precipitation (ITP) Facility. The evaluation included interviews with environmental, health and safety, and operating personnel; reviews of environmental files and documentation (including procedures, monitoring data, inspection records, permits, etc.); and a complete walk-through of facility operations and associated regulated activities. The purpose of this All-In-One is to close the following SAIC assessment findings:

(1) 03.031.060293
(2) 03.032.060293
(3) 03.033.060293
(4) 03.012.051193

Please note that the aforementioned findings are BMP in nature. Potential non-compliance issues that were identified during the assessment were corrected immediately. Below is a brief synopsis of the four open findings and the corrective action and/or justification for closure.

(1) Finding 03.032.060293 stated that the permit application for the Industrial Wastewater Permit 17,424-IW, Tank Farm Wastewater Permit, Section 4.5.1.4 requires that a minimum flow be maintained across ITP's sintered metal filters of 100 gpm. SAIC recommended that procedures to operate the filters be modified to reflect this requirement.

Justification - High Level Waste Environmental Compliance (HLWEC) does not feel that a procedure or permit modification is required to close this finding. The wastewater permit application describes general operating systems and conditions at ITP. Section 4.5.1.4 states, "The reacted salt solution is transferred to each cross flow filter at a maximum rate of approximately 500 gallons per minute. In order to maintain the desired operating conditions for the cross flow filters, a minimum reacted salt solution flow rate is maintained. This minimum flow rate (100 gallons per minute) is maintained by recirculating the reacted salt solution/precipitate slurry through the precipitate return lines to Tank 48." The 100 gpm minimum flow rate is to, "maintain the desired operating conditions," so that damage to the filters and pumps do not occur. Flow of material through the filters below the 100 gpm "desired limit" does not warrant a permit violation.

(2) Finding 03.031.060493 and 03.033.060493 states that the permit application for Industrial Wastewater Permit 17,424-IW, Tank Farm Wastewater Permit, Section 4.5.1.4 limits a maximum filtrate flow of 115 gpm to the stripper column #1 during concentration, and 33 gpm to stripper column #2 during washing. SAIC recommended that procedures to

operate the stripper column should be modified.

Justification - Again, the wastewater permit application outlines desired operating conditions and are not actual permit parameters. The 115 gpm and 33 gpm flow rates were based upon design specifications. Based upon start-up testing, it has been determined that the efficiency and associated rated capacity of both the large and small stripping columns are greater than described in the permit application. The stripping columns will be operated at a rate which will promote filtration and high stripping efficiency. As with the previous finding, HLWEC feels that the no permit modification or procedure controls are required.

(3) Finding 03.012.051193 states that the ETF waste concentrate may exceed the radioactivity limits for Tank 50 and SMDF as there are no procedures requiring waste characterization before a transfer.

Corrective Action - Procedure 241-FH-ETF-903I, Waste Concentrate Samples Partial Analysis Sample Results (U), approved on 1/27/94, in conjunction with Procedure 241-FH-ETF-903H, "Waste Concentrate Samples - Full Analysis Sample Results," approved on 11/19/91, ensures that samples are pulled, analyzed, and accepted before transfer to Tank 50. These procedures adequately address and subsequently close the aforementioned finding.

Please insure that the closure of these findings is reflected in the HLW Environmental Compliance Assessment Program Summary Table. Similarly, please note that ITP has no outstanding SAIC findings. If you have any questions regarding the information herein, please contact me at 7-8088.

Distribution:

To:	Jeffry L. Newman	(NEWMAN-JL-L2846 @A1@SLSRP1)
CC:	CARY B. STEVENS (STEVENS-CB-O5981 AT A1 AT SASRS2)	
CC:	D T BIGNELL	(BIGNELL-DT-O5579 @A1@SLSRP1)
CC:	Charles G. Lampley 7-8550 (LAMPLEY-CG-O6174 AT A1 AT SASRS2)	
CC:	Eddie R. Ennis	(ENNIS-ER-Y6279 @A1@SASRS0)
CC:	Chuck Hayes	(HAYES-CR-Z9722 @A1@SLSRP1)
CC:	Cassandra L. Todaro	(TODARO-CL-L4157 @A1@SLSRP1)
CC:	Matthew A. Hunter	(HUNTER-MA-L2335 AT A1 AT SASRS2)
CC:	B.G. Croley	(CROLEY-BG-Y5688 @A1@SLSRP1)
CC:	Bill Van Pelt (VANPELT-WB-O7016 AT A1 AT SASRS2)	

Westinghouse
Savannah River Company

P.O. Box 616
Aiken, SC 29802

ESH-FSS-94-0304

May 31, 1994

Mr. L. E. Arrington, Engineer
Industrial and Agricultural Wastewater Division
South Carolina Department of Health
and Environmental Control
2600 Bull Street
Columbia, South Carolina 29201

Dear Mr. Arrington:

IN-TANK PRECIPITATION (ITP) FACILITY FILTRATE LINE INTEGRITY VERIFICATION REQUIREMENTS (U)

The Savannah River Site (SRS) intends to modify the frequency of the hydrostatic test of the two single shelled, filtrate transfer lines at the In-Tank Precipitation (ITP) Facility. Your approval is requested to decrease the integrity testing frequency in an effort to minimize exposure of personnel to radiation and unnecessary waste generation.

As outlined on pages 59-61 of the Phase I Tank Assessment Report submitted to SCDHEC as part of the Wastewater Permit Application Package for the F & H-Area High Level Waste Tank Farms, the filtrate transfer lines do not meet the secondary containment requirements of Appendix B of the Federal Facility Agreement (FFA). The lines are used to transport decontaminated salt solution from the cross flow filters to the benzene stripping columns within the ITP Facility. The filter cell walls and floor are constructed of stainless steel as is the stripper building floor - each providing secondary containment to their respective areas. However, the sections of piping leading from the filter cell to the stripper building are encased only within a concrete wall for approximately 35 feet. As discussed in the Tank Assessment Report, the plan was to hydrostatically test these lines to confirm their integrity once every cycle (approximately every 3-4 months). Additionally, to supplement the leak test, a radiologic survey of the outer surface of the filter cell concrete wall was to be performed.

However, it has since been determined that hydrostatic tests result in unnecessary radiation exposure to personnel and the creation of additional radioactive liquid waste. Part of the hydrostatic test requires the removal of the filter cell covers (shielding) to allow access to the lines. The more frequent the cell covers are removed, the greater the chance of personnel exposure. In order to keep exposure as low as reasonably achievable, an engineering evaluation was performed to determine if a more reasonable testing frequency, consistent with the vulnerability of the lines to various degradation mechanisms, could be technically justified. Over pressurization, mechanical damage, thermal damage, vibration induced fatigue, and stainless steel corrosion characteristics were each evaluated and determined to have negligible effects on the degradation of the lines. It has also been concluded that the radiologic survey serves no useful purpose in that a leak of low activity decontaminated salt solution would not be detected on the outside face of the three foot thick concrete wall. It should also be noted that a leak in one of these embedded lines could drain to a point where the line protrudes out of the concrete wall and into an area of secondary containment.

The ITP filters are expected to have a typical operative life of approximately 22 months. As such, SRS intends to test the filtrate lines once very 2 years, with the period between testing not to exceed 2.5 years. This frequency is consistent with the expected schedule for filter fouling and removal. At the time the filter is removed from the filter cell, the radiation hazards associated with these tests are greatly reduced and will thus promote "safer" conditions. In addition, the wastewater generated from conducting the hydrostatic tests will be reduced in equal proportion to the fewer number of tests. The radiologic survey of the filter cell wall will also be discontinued.

This matter has been discussed between yourself and Chuck Hayes. If you have any questions or concerns regarding this proposal, please contact Mr. Hayes at (803) 725-8838.

Yours very truly,

W D Dunaway

W. D. Dunaway, Manager
Permitting Field Support Group
Environmental Protection Department

CRH:pr

CC: M. C. Reece, SCDHEC, Lower Savannah District
A. B. Gould, 703-47A (2)

Letter, L. E. Arrington from W. D. Dunaway
ESH-FSS-94-0304, May 31, 1994

BCC:

C. J. Baker, 704-56H
D. T. Bignell, 719-4A
D. M. Blue, 742-6G
G. L. Cauthen, 241-119H
B. G. Croley, 241-120H
H. L. Davis, 703-47A
W. D. Dunaway, 742-5A
E. R. Ennis, 704-56H
A. R. Gough, 992-3W
C. R. Hayes, 742-5A
M. A. Hunter, 703-7C
R. M. Satterfield, 719-4A
C. B. Stevens, 742-6G
A. L. Towns, 703-47A
W. M. Wierzbicki, 742-A
EPD Fileroom, 742-A
Records Administration, 773-52A

EPD-FSS
FIELD VISIT REPORT

(REV. 0, 6/10/91)

DISTRIBUTION:

PERMIT FILES #W-0517, W-0629
J. Carroll, 717-9N
M. A. Hunter, 703-7C

EPD REPRESENTATIVE	SECTION (FSS Or FSG)	DATE	TIME STARTED	TIME ENDED	TOTAL TIME IN HRS
C. R. HAYES CR Hayes	PFSG	5/23/94	9:00 AM	11:00 AM	2.0

FIELD CONTACT NAME (Location, Phone #)	FIELD CONTACT DEPT
J. Carroll, 717-9N, 7-4675	Construction Env.

OTHER PARTICIPANTS(Name, Department, Location, Phone #)

Matt Hunter, HLW Env. Compliance, 7-6416

LOCATION

H-AREA

PURPOSE OF VISIT

Perform interim construction Inspection of Auxiliary Pump Pit Bypass and Latewash facilities.

FIELD VISIT SUMMARY

Zone 2 piping bypass is complete and backfilled. Work on Zones 3 and 4 in various stages of progress.

Bypass "switchover" section was visible.

Excavation for Latewash Additional Vault was nearing completion.

At this point, without seeing certifying documentation, all appears acceptable. Pre-final inspection to follow.

ACTION REQUIRED? (YES OR NO) No

IF YES DESCRIBE:

HIGHLIGHTED ITEM? (YES OR NO) No

INTER-OFFICE MEMORANDUM
Savannah River Site

19-May-1994 10:16am EDT

From: Douglas M. Blue (BLUE-DM-L4808 AT A1 AT SASRS2)
Dept: HLWEC
Tel : 5578088

ITP Environmental Permitting Status (U)

Please find below a summary of pertinent Federal, State and Local environmental permits for the Extended Sludge Processing (ESP) and In-Tank Precipitation (ITP) facilities. Permitting for the ESP facility is complete. The following actions are required for the start-up of the ITP facility.

- Completion of the Supplemental Environmental Impact Statement
- Notification to the South Carolina Department of Health and Environmental Control (SCDHEC) approximately 15 days before radioactive operation - air permit requirement.
- Provide tour of the facility to SCDHEC. Tour will focus on air emissions from tanks, buildings and diesel. Operating permit will be issued for diesel upon completion of a DHEC inspection.

Although in certain circumstances permit special conditions are listed below, the purpose of this memo is to provide a list and status of applicable permits. Permit special conditions and requirements are communicated to the facilities through existing protocol. Permit special conditions and limits are provided herein for information only and are by no means all inclusive.

If you have any questions, please contact me at 7-8088 or pager 2651.

EXTENDED SLUDGE PROCESSING (ESP) - Project S-2081

1. National Environmental Policy Act (NEPA)

- Environmental Evaluation Checklist prepared and issued (NMP-WMP-92-4504, 3/6/92).

- SRS-NEPA group determines no further documentation will be required for resumption of ESP activities (ESH-NEP-92-0209, 6/11/92).

2. SCDHEC Industrial Wastewater Treatment Permit

- 'Permit to Operate' granted by SCDHEC on 3/3/93 (ESH-FSS-93-0129). No further notification is required for ESP start-up.

- Note that this permit will serve as the primary operating permit for the ESP facility. Design, process or operating changes concerning the ESP facility may require prior SCDHEC approval before implementation.

3. Resource Conservation and Recovery Act (RCRA)

- Due to issuance of SCDHEC Industrial Wastewater Permit (see above) the current RCRA Part A permit for SRS has been amended to delete the F/H Tank Farms (WER-HLE-930259, 2/16/93).

4. National Emission Standard for Hazardous Air Pollutants - Radionuclides

- Radionuclide emissions from ESP calculated/estimated by HLWE (WER-WMH-920316 REV 1, 6/3/92) and SRTC (SRT-ETS-920133, 6/9/92).

- Results of these studies were reviewed by the SRS Environmental Protection Department (EPD) who concluded (ESH-ESS-920444, 8/4/92) that no further regulatory work, monitoring equipment, or studies will be necessary for ESP. Periodic confirmation of radionuclide emissions will be required.

5. Mercury Emissions from ESP

- Two SRTC studies (SRT-LWP-92-050, 5/12/92 & SRT-ETS-920121, 6/1/92) have indicated ~ 1.47 lbs Hg/yr will be emitted from the ESP facility. Modeling indicates mercury will contribute a concentration of 5.0 x 10E-16 ug/m3 at the SRS plant boundary.

- Information on Mercury concentrations forwarded to SCDHEC to determine if permit is required (ESH-ESS-920347, 6/17/92).

- SCDHEC response indicates no permit will be required for ESP mercury emissions (ESH-ESS-920619, 11/11/92).

6. SCDHEC Domestic Water Permit

- ESP facility is covered by existing SCDHEC Domestic Water Permit for the F/H Tank Farms (SCDHEC Permit # 405556, 4/21/88).

7. National Pollutant Discharge Elimination System (NPDES)

- ESP facility covered by existing SRS NPDES Permit (#SC0000175, 7/1/88). Stormwater run-off from ESP will be routed to NPDES outfall (#H-07) and/or diverted to the H-Area Retention Basin (#H-17). Note that the ESP facility has no planned liquid releases/discharges.

8. SCDHEC Sanitary Wastewater Permit

- ESP facility is covered by the existing SCDHEC Sanitary Wastewater Permit (#11442, 8/4/87).

** For further discussion of the ESP permitting history/status - please see "Environmental Permits for the ESP Facility" (WER-WMH-920367,

6/29/92).

IN-TANK PRECIPITATION FACILITY (ITP) - PROJECT S-1588/S-3781

1. SCDHEC Industrial Wastewater Treatment Permit

- 'Permit to Operate' granted by SCDHEC on 3/3/93 (ESH-FSS-93-0129). No further notification is required for ITP start-up.

- A special condition of the SCDHEC Wastewater Permit requires that information regarding the ITP Filtrate Hold Tank Liner be forwarded to SCDHEC within 60 days of issuing the permit. This information was forwarded to SCDHEC on 3/18/93 (ESH-FSS-93-0137).

- Note that this permit will serve as the primary operating permit for the ITP facility. Design, process or operating changes concerning the ITP facility may require prior SCDHEC approval before implementation.

2. Resource Conservation and Recovery Act (RCRA)

- Due to issuance of SCDHEC Industrial Wastewater Permit (see above) the current RCRA Part A permit for SRS has been amended to delete the F/H Tank Farms (WER-HLE-930259, 2/16/93).

- Note: the generation and management of non-routine hazardous/mixed waste at the ITP facility is still governed under the RCRA regulations. Waste will be placed into a satellite and/or staging area as appropriate.

3. SCDHEC Air Quality Control Permit - Benzene

- WSRC notifies SCDHEC of the start of cold chemical runs at the ITP facility (ESH-ESS-920379, 7/6/92).

- SCDHEC inspection of ITP facility (9/17/92) raises no issues. SCDHEC representatives does state that a more detailed inspection of the ITP facility will be performed at a later date.

- EPD issues memo clarifying that the ITP process has been granted a 'Permit to Operate' by SCDHEC Bureau of Air Quality Control (ESH-ESS-920588, 10/22/92).

- SCDHEC issues modified permits (SCDHEC # 0080-0041-H-CA through CF) for the ITP facility to release ~ 23 tons/yr (ESH-ESS-920683, 12/30/92).

* SCDHEC allows for 394 lbs of benzene to be emitted from the test facility feed tank during cold chemical runs, (Ref: Letter from R.A. Gibson to M.D. Dukes, January 6, 1993).

- SCDHEC issues modified consolidated air permit (SCDHEC #0080-0041) for H-area and ITP, effective May 18, 1993.

* SCDHEC allows for an additional 804 lbs of benzene to be emitted from the test facility feed tank during cold chemical runs, (Ref: Letter

from R.A. Gibson to M.D. Dukes, July 26, 1993).

- SCDHEC issues revised modified consolidated air permit (SCDHEC #0080-0041) for H-area and ITP, effective April 11, 1994. An inspection of the facility is required prior to radioactive processing. Permit limits are annualized averages. Permit limits are as follows: Tank 48, 0.6 lbs/hr; Tank 49, 3.66 lbs/hr; Tank 50, 0.002 lbs/hr; Tank 22, 0.001 lbs/hr; STPB storage tank ~ 0.0097 lbs/hr; Stripper Column, 0.71 lbs/hr.

  * Specifically required for Benzene testing.

4. Mercury Emissions from ITP

- Two studies completed (M-CLC-H-00226, 5/14/92 & SRT-ETS-920095, 5/21/92) indicated ITP process will emit ~ 4.8 lbs Hg/yr which will correlate to an offsite concentration of 9.2x10E-6 ug/m3 at the SRS boundary.

- Information on Mercury Emissions sent to SCDHEC (ESH-ESS-920346, 6/17/92).

- SCDHEC issues modified permits (SCDHEC # 0080-0041-H-CA & CB) for the ITP facility to release ~ 5 lbs/yr (ESH-ESS-920683, 12/30/92).

- SCDHEC issues modified consolidated air permit (SCDHEC #0080-0041) for H-area and ITP, effective May 18, 1993.

- SCDHEC issues modified consolidated air permit (SCDHEC #0080-0041) for H-area and ITP, effective April 11, 1994. Permit limit for Diphenyl Mercury for Tanks 48 and 49 is 2.4 lbs/hr annual average.

5. NESHAP Radionuclide Permit

- Approval to construct issued by EPA for DWPF/ITP (EPA # 4APT-AC, 4/25/88).

- SRTC/WME study completed (SRL-ETS-9200239, 6/5/90) that indicated offsite concentration attributed to ITP process is ~ 4.3x10E-4 mrem/yr. EPA limit is 0.1 mrem/yr.

- Sampling & Analytical Protocol for the ITP facility (submitted 5/22/92 #ESH-ESG-920300) is approved by the EPA (ESH-BCB-92016, 7/27/92).

- Sampling must be completed 30 to 90 days after radioactive operations. Sampling will be performed by EMS.

6. NESHAP Benzene

- Regulation deemed 'Not Applicable' by DOE-SR ("Position Paper on NESHAP Benzene Issue" Turner to Messick, 12/21/90).

7. SCDHEC Air Quality Control Permit - Diesel Generator (254-4H)

- Construction Permit for Diesel Generator opacity limit issued by SCDHEC (SC#0080-0046-CE, 3/31/86).

- Generator yet to be placed into operation.

- SCDHEC has issued a modified consolidated air permit (# 0080-0041) for H-area and ITP, effective May 18, 1993. 254-4H is not included on this operating permit, however, has a construction permit. Once the diesel is ready to be placed in operation, the permit will be modified to include this source. Before being placed into operation, tests may be performed on the diesel so long as run times are recorded in the log book per 241-FEH-775. DHEC must inspect the diesel in order to provide an permit to operate.

8. SCDHEC Air Quality Control Permit - Diesel Fire Pumps (241-125H)

- Construction permit for opacity limit issued by SCDHEC (SC#0080-0042-CI, 3/15/92).

- Notified SCDHEC Construction is complete (ESH-ESC-920050, 1/23/92).

- Permission to operate granted by SCDHEC (WER-WMT-920064, 1/21/92).

- SCDHEC inspection of Fire Pumps on 9/17/92. No issues raised.

- Diesel Fire Pumps have been turned over to the Power Department. ITP is no longer custodian of this equipment.

9. NEPA Documentation for ITP

- Memo-to-File issued for Tank 48 and 49 modifications for ITP process (DOE Memorandum "Compliance with NEPA- ITP, Tank 48, Savannah River Plant", 6/15/84).

- Supplement to Memorandum To File for benzene emissions issued (DOE Memorandum "ITP, Tank 48 - SRP-Compliance with NEPA" 4/18/85).

- Categorical Exclusion for Stripping Columns/Nitrogen System issued (Memorandum "NEPA Env Evaluation - ITP Safety and Env Enhancement Project S-1588", 3/28/89).

- Categorical Exclusion issued for ITP Fire Suppression System (Memo "NEPA Env Evaluation - Fire Suppression ITP 241-H Project S-1588" 4/2/89).

- Env Analysis for DWPF/ITP sent to DOE-HQ ("Analysis of Env Impacts Resulting from Modifications in the DWPF" January 1991 DOE-ED).

- Per DOE-HQ memo ("NEPA Determination for DWPF at SRS" Ziemer to Duffy, 10/12/90) no further NEPA documentation for ITP necessary.

Note: A Supplement to the aforementioned EIS has been determined to be required. Anticipated Record of Decision (ROD) is November 1994.

10. Tank 50 - SCDHEC Wastewater Permit

- SCDHEC Operating Permit issued (SC # 14520, 9/12/88).

11. H-Z Inter Area Line - SCDHEC Wastewater Permit

- SCDHEC Operating Permit issued (SC # 14338, 9/12/88).

12. H-S Inter Area Line - SCDHEC Wastewater Permit

- SCDHEC Operating Permit issued (SC # 17,424-IW, 3/4/93). (NOTE - Final inspection of Auxiliary Pump Pit is required prior to operation).

13. Domestic Water Permits

- Operating Permit for the ITP Filter/Stripping facilities issued by SCDHEC (SC # 40556, 11/22/85).

- Operating Permit for the ITP Fire Suppression System issued by SCDHEC (SC#LS91005, 3/23/92).

14. Sanitary Wastewater Permit (607-7H)

- Operating Permit issued by SCDHEC (SC#11442, 2/4/87).

15. National Pollutant Discharge Elimination System (NPDES) Permit

- Outfalls that accept releases from the ITP Facility (#H-07, #H-08 #H-17) have been permitted (#SC0000175, 9/24/88) per the SRS NPDES Permit.

- The use of STPB in the test facility has brought rise to rainwater containing concentrations of benzene. Rainwater collected in the test facility dike is being transferred to ETF for treatment; SCDHEC was notified that benzene is "believed present" in the effected NPDES outfalls, (ESH-ESS-93-0388).

- Note that the ITP process will have no planned liquid release of any kind during normal operation.

16. Benzene Abatement Project

- Functional Design Criteria (M-FDC-H-00023) issued on 8/7/92.

- Project currently unfunded.

17. ITP Filter Disposal Program

- FDC issued for design of filter disposal box (M-FDC-G-00024, 8/27/92)

- Request for "Treatability Variance" submitted to EPA (WSRC-RP-91-777, 1/10/92)

- EPA approves Petition for a Treatability Variance from the Land Disposal Restrictions Treatment Standards for the Filters. Variance effective October 1, 1993.

- Filter box designed and remotability test performed on May 12, 1994.

** Further information on the ITP Env Permitting can be found in #NMP-WMT-910919)

INTER-OFFICE MEMORANDUM
Savannah River Site

24-Apr-1994 01:57pm EDT

To: See Below

From: Douglas M. Blue (BLUE-DM-L4808 AT A1 AT SASRS2)
Dept: HLWEC
Tel : 5578088

~~7-0500~~

Filtrate Line (U)

Chuck,

Recall several months ago our discussion regarding the difficulties associated with the hydrostatic inspection requirements for the ITP Filtrate Lines as outlined in the Tank Assessment Report - once every cycle. ITP Engineering and Operations have proposed an inspection frequency of once every 2 years - consistent with anticipated filter replacement. This inspection frequency is supported by corrosion data, piping codes, and most importantly ALARA considerations. I have obtained approval from ITP management to propose this inspection frequency to SCDHEC. So that we can expedite the proposal to the State, please give me a call at 7-8088 to arrange a time to go over the details of the proposal and to answer any questions you may have.

Thanks,

Douglas Blue
ITP Environmental

ASKED DOUG BLUE TO SEND ME A DRAFT SRS → DHEC LETTER ON THIS. I'LL COMMENT AND THEN WE'LL MEET.

CRH
4/27

Distribution:

To: Chuck Hayes (HAYES-CR-Z9722 @A1@SLSRP1)

CC: CARY B. STEVENS
(STEVENS-CB-O5981 AT A1 AT SASRS2)
CC: D T BIGNELL (BIGNELL-DT-O5579 @A1@SLSRP1)
CC: Matthew A. Hunter (HUNTER-MA-L2335 AT A1 AT SASRS2)
CC: Chi L Leung (LEUNG-CL-O8827 AT A1 AT SASRS2)
CC: Chris J. Baker (BAKER-CJ-B4996 @A1@SRXSS2)
CC: Daniel C. Wood (WOOD-DC-O6237 @A1@SRXSS2)
CC: James N. Brooke (BROOKE-JN-Y4574 AT A1 AT SASRS2)
CC: Gary L. Cauthen (CAUTHEN-GL-Y8117 @A1@SRXSS2)
CC: Donald Thaxton
(THAXTON-GD-O5806 AT A1 AT SASRS2)
CC: B.G. Croley (CROLEY-BG-Y5688 @A1@SLSRP1)
CC: Allen C. Smith (SMITH-AC-B6354 @A1@SLSRP1)
CC: Bill Van Pelt
(VANPELT-WB-O7016 AT A1 AT SASRS2)
CC: Eddie R. Ennis (ENNIS-ER-Y6279 @A1@SASRS0)
CC: Charles G. Lampley 7-8550
(LAMPLEY-CG-O6174 AT A1 AT SASRS2)

2

INTER-OFFICE MEMORANDUM
Savannah River Site

15-Apr-1994 03:18pm EDT

To: **See Below**

From: Douglas M. Blue (BLUE-DM-L4808 AT A1 AT SASRS2)
Dept: WMRC
Tel : 5578088

Hydrostatic Inspection Requirement for the Filtrate Lines (U)

Gentlemen:

The filtrate lines leading from the filters to the stripping columns are partially embedded within concrete - these lines do not meet the secondary containment requirements as mandated in the Federal Facility Agreement (FFA). As was required by the FFA, WSRC submitted a wastewater permit application with a report assessing the adequacy of secondary containment for all waste tanks, ancillary equipment, and transfer lines - the filtrate lines were identified as lacking secondary containment. As such, WSRC committed to inspecting the lines once every cycle, approximately every 3-4 months in order to meet the intent of the secondary containment requirement. This inspection frequency was acceptable to a professional engineer and subsequently received his certification of approval before the assessments submittal to the South Carolina Department of Health and Environmental Control (DHEC).

However, ITP Operations and Engineering has determined that the inspection frequency is too rigorous in light of the personnel exposure risks and contamination risks associated with the removal of the filter cell covers which will be required to perform the hydrostatic test. Similarly, the relatively benign nature of the material which will be transferred through the line does not warrant an inspection frequency of every cycle.

Allen Smith, ITP Engineering, evaluated the forms of potential degradation of the line. Mr. Smith determined that, "In the absence of any active degradation mechanism, the inspection of the filtrate line following every operating cycle is not justified. Based on the very low corrosion rates found in testing, the filtrate line inspection frequency can be chosen based on operational consideration rather than degradation concerns." Mr. Smith recommended:

(1) The embedded filtrate line should be inspected every two years.
(2) The interval between inspections should not exceed 2.5 years.
(3) The filters are expected to have a typical operating life of 22 months. In the event this proves to be the operating life of the filters, inspection at the time off filter replacement is recommended.

These recommendations are consistent with the expectations of High Level Waste Environmental Compliance and the Environmental Protection Department.

The purpose of this AIO is to ensure that all effected parties are in agreement with these recommendations/commitments. If you would like a copy of Mr. Smith's evaluation, please contact me at 7-8088 pager 2651. If I do not receive any comments or concerns by the close of business on 4/22, I will have this proposal forwarded to DHEC.

Thank you in advance for your prompt attention to the matter.

Douglas Blue
ITP Environmental Coordinator
File Code 21.7

Distribution:

To:	Chris J. Baker	(BAKER-CJ-B4996 @A1@SRXSS2)
To:	B.G. Croley	(CROLEY-BG-Y5688 @A1@SLSRP1)
To:	Eddie R. Ennis	(ENNIS-ER-Y6279 @A1@SASRS0)
CC:	James N. Brooke	(BROOKE-JN-Y4574 AT A1 AT SASRS2)
CC:	CARY B. STEVENS (STEVENS-CB-O5981 AT A1 AT SASRS2)	
CC:	Matthew A. Hunter	(HUNTER-MA-L2335 AT A1 AT SASRS2)
CC:	D T BIGNELL	(BIGNELL-DT-O5579 @A1@SLSRP1)
CC:	Allen C. Smith	(SMITH-AC-B6354 @A1@SLSRP1)
CC:	Daniel C. Wood	(WOOD-DC-O6237 @A1@SRXSS2)
CC:	Harvey M. Handfinger (HANDFINGER-HM-L3128 AT A1 AT SASRS2)	
CC:	Gary L. Cauthen	(CAUTHEN-GL-Y8117 @A1@SRXSS2)
CC:	Chi L Leung	(LEUNG-CL-O8827 AT A1 AT SASRS2)
CC:	Donald Thaxton (THAXTON-GD-O5806 AT A1 AT SASRS2)	
CC:	W.C. Clark	(CLARK-WC-O6888 AT A1 AT SASRS2)
CC:	Bill Van Pelt (VANPELT-WB-O7016 AT A1 AT SASRS2)	
CC:	RICHARD C. FOWLER	(FOWLER-RC-O5974 @A1@SRXSS2)
CC:	Fay T. Kelley	(KELLEY-FT-L5088 AT A1 AT SASRS2)
CC:	Rod M. Satterfield	(SATTERFIELD-RM-T3212 @A1@SLSRP1)

OSR 3-4A-W (Rev1-89)

WESTINGHOUSE SAVANNAH RIVER COMPANY

INTER-OFFICE MEMORANDUM

ESH-FSS-94-0148

March 21, 1994

TO: D. T. BIGNELL, 719-4A

FROM: W. D. DUNAWAY, 742-5A
(X5-5754)

DEFENSE WASTE PROCESSING FACILITY (DWPF) AND IN-TANK PRECIPITATION FACILITY (ITP) CHEMICAL RUNS (U)

Ref.: Memo, Dunaway to Bignell, 1/4/94

The referenced memo states that although SCDHEC approval may not be required for some equipment / processing changes during chemical runs at DWPF and ITP, prior written approval from the Environmental Protection Department (EPD) is required for any equipment or processing changes regardless of scope.

In an attempt to clarify the type of changes requiring SCDHEC or EPD approval, a sample listing of activities/installations that could possibly occur at DWPF and ITP is attached. The list was compiled by a task team made up of members from DWPF and High Level Waste Environmental Compliance, DOE-Environmental Compliance Division and EPD. The list is broken into the following four general approval categories:

- SCDHEC permit / permit modification required
- SCDHEC approval (no permit / permit modification) required
- EPD approval required
- DWPF Environmental Compliance approval required

Please keep in mind that this list is intended to be used only as a guide and is not all inclusive.

If there are any questions, please let me (X5-5754) or Chuck Hayes (X5-8838) know.

CRH:pr
Attachment

CC: R. K. Cauthen, 704-15S
A. R. Gough, 992-3W
C. R. Hayes, 742-5A
M. A Hunter, 742-6G
J. L. Keyes, 742-A
W. L. Payne, 742-A
J. S. Roberts, 742-A
R. Satterfield, 719-4A
C. B. Stevens, 742-6G
A. L. Towns, 703-47A
W. M. Wierzbicki, 742-A
Records Administration, 773-52A
EPD Fileroom, 742-A

DWPF & ITP CHEMICAL RUNS PERMITTING / APPROVAL LISTING

ITEMS REQUIRING SCDHEC PERMIT / PERMIT MODIFICATION

(REQUIRES DOE CONCURRENCE)

- INSTALLING CARBON BED / MERCURY REMOVAL UNIT
- INSTALLING HYDROGEN / AMMONIA SCRUBBERS IN DWPF OFF GAS SYSTEM
- INSTALLING pH ADJUSTMENT EQUIPMENT IN ORDER TO ADJUST RECYCLE WASTEWATER
- ADDING PROCESS CHEMICAL TANKS / PUMPS / OTHER EQUIPMENT
- TRANSFORMING APP INTO A "LATEWASH" FACILITY

ITEMS REQUIRING SCDHEC APPROVAL (PERMIT MODIFICATION UNNECESSARY)

(REQUIRES DOE CONCURRENCE)

- INSTALLING NEW (NOT REPLACEMENT) TRANSFER PUMPS
- INSTALLING A LARGER FAVC UNIT (WITH NO CHANGE IN LIQUID EFFLUENT)
- IMPLEMENTING EQUIPMENT MODS OR PROCESS FLOW REROUTINGS DURING COLD CHEMICAL RUNS ON A PERMANENT BASIS
- IMPLEMENT THE USE OF NITRIC ACID AS A REPLACEMENT FOR FORMIC ACID
- REDIRECTING LAB DISCHARGES TO THE RCT
- DISPOSING OF A WASTE STREAM CONTAMINATED WITH ANYTHING IN EXCESS (OR ANYTHING NEW) OF WHAT HAS BEEN SUBMITTED TO SCDHEC IN THE CCR RECYCLE TREATABILITY STUDIES

DWPF & ITP CHEMICAL RUNS PERMITTING / APPROVAL LISTING

ITEMS REQUIRING EPD APPROVAL ONLY

(DWPF ENV. AFFAIRS NOTIFIES DOE-DWPD)

- INSTALLATION OF A TEMPORARY JUMPER TO REDIRECT PROCESS TANK CONTENTS
- MINOR EQUIPMENT MODIFICATIONS
- PROCESS FLOW IS REROUTED DURING COLD CHEMICAL RUNS
- TESTING ALTERNATIVE CHEMICALS (PROVIDED THEY DO NOT BECOME PART OF A WASTESTREAM DISCHARGED TO THE ENVIRONMENT

ITEMS REQUIRING DWPF - ENV. AFFAIRS APPROVAL ONLY

(DWPF ENV. AFFAIRS NOTIFIES DOE-DWPD)

- REPLACEMENT OF VALVES, PIPING, JUMPERS, ETC. WITH "LIKE KIND" SUBSTITUTES
- RELOCATION OF INSTRUMENTATION
- REPLACEMENT OF A SUMP LEAK DETECTION PROBE WITH A DIFFERENT DESIGN AND AT A DIFFERENT LOCATION
- REPAIRING PROCESS WASTEWATER LINES

Westinghouse
Savannah River Company

P.O. Box 616
Aiken, SC 29802

ESH-FSS-94-0122

February 18, 1994

Mr. R. L. Hutchinson, Manager
Underground Storage Tank Section
Ground-Water Protection Division
South Carolina Department of Health
and Environmental Control
2600 Bull Street
Columbia, SC 29201

Dear Mr. Hutchinson:

REMOVAL OF TANKS FROM NOTIFICATION LIST (U)

The Savannah River Site (SRS) has identified 84 tanks on the South Carolina Department of Health and Environmental Control (SCDHEC) underground storage tank (UST) notification list that are exempt from the requirements of R.61 - 92 Part 280. SRS requests that these tanks be removed from the notification list. A tabulation of the tanks and their notification numbers is attached. Each set of tanks is discussed below.

A total of 10 tanks are listed on notification numbers N-02-GF-09481 (lines 1 - 8) and N-02-GF-09482 (lines 1 - 2). These tanks contain mixed radioactive hazardous waste. They are included in the SRS Part A Resource Conservation and Recovery Act (RCRA) permit and operate under interim status.

Nine storage tanks are listed on notification number N-02-GF-09483 (lines 1 - 7) and N-02-GF-09486 (lines 7 - 8). These tanks are also hazardous waste storage tanks included on the SRS Part A RCRA permit. An additional tank listed under number N-02-GF-09483 (line 8) was previously closed as a hazardous waste tank. SRS requested that SCDHEC delete this tank in the July 12, 1988, modified UST notification.

Fourteen tanks are listed under notification number N-02-GF-09487 (lines 1 - 8) and N-02-GF-09488 (lines 1 - 6) which are process flow-through tanks. These tanks were identified as being excluded from UST notification requirements in the May 8, 1986, notification. Notification forms were completed and submitted for informational purposes only.

A total of 51 high level waste tanks are listed on lines 1 - 8 of notification numbers N-02-GF-09489, N-02-GF-09490, N-02-GF-09491, N-02-GF-09492, N-02-GF-09493, N-02-GF-09494, and lines 1 - 3 of N-02-GF-09495. These are high level radioactive waste tanks which are operating under a waste water treatment permit. The waste water operating permit was granted on March 3, 1993.

If you have any questions or need more information, please contact Ross Fanning of my staff at (803) 725-4853.

Sincerely,

S. J. Carroll

S. J. Carroll, Acting Manager
Facility Support Section
Environmental Protection Department

RLF:sam
Enclosure

CC: A. C. Doswell, 703-47A
R. L. Fanning, 742-A
C. R. Hayes, 742-5A
W. M. Wierzbicki, 704-59F
N. V. Halverson, 773-43A
EPD Files, 742-A
Records Administration, 773-52A

List of Tanks to be Removed from Notification List

Notification #	Line #	SRS Location	Capacity	Material
N-02-GF-09481	1	776-A	5,900	Rad. Waste
N-02-GF-09481	2	776-A	5,900	Rad. Waste
N-02-GF-09481	3	776-A	5,900	Rad. Waste
N-02-GF-09481	4	776-A	3,670	Rad. Waste
N-02-GF-09481	5	776-A	3,670	Rad. Waste
N-02-GF-09481	6	776-A	3,670	Rad. Waste
N-02-GF-09481	7	776-A	5,900	Rad. Waste
N-02-GF-09481	8	776-A	5,900	Rad. Waste
N-02-GF-09482	1	776-A	5,900	Rad. Waste
N-02-GF-09482	2	776-A	5,900	Rad. Waste
N-02-GF-09483	1	643-7G. #25	25,000	Rad. Waste
N-02-GF-09483	2	643-7G. #26	25,000	Rad. Waste
N-02-GF-09483	3	643-7G. #27	25,000	Rad. Waste
N-02-GF-09483	4	643-7G. #28	25,000	Rad. Waste
N-02-GF-09483	5	643-7G. #29	25,000	Rad. Waste
N-02-GF-09483	6	643-7G. #30	25,000	Rad. Waste
N-02-GF-09483	7	643-7G. #31	25,000	Rad. Waste
N-02-GF-09483	8	643-7G. #32	25,000	Rad. Waste
N-02-GF-09486	7	643-7G. #23	25,000	Rad. Waste
N-02-GF-09486	8	643-7G. #24	25,000	Rad. Waste
N-02-GF-09487	1		1,250	Rad. Waste
N-02-GF-09487	2		100	Rad. Waste
N-02-GF-09487	3		1,690	Rad. Waste
N-02-GF-09487	4		6,450	Rad. Waste
N-02-GF-09487	5		6,450	Rad. Waste
N-02-GF-09487	6		6,450	Rad. Waste
N-02-GF-09487	7		6,450	Rad. Waste
N-02-GF-09487	8		17,700	Rad. Waste

List of Tanks to be Removed from Notification List, cont.

N-02-GF-09488	1	17,700	Rad. Waste
N-02-GF-09488	2	150	Rad. Waste
N-02-GF-09488	3	1,250	Rad. Waste
N-02-GF-09488	4	560	Rad. Waste
N-02-GF-09488	5	10,800	Rad. Waste
N-02-GF-09488	6	840	Rad. Waste
N-02-GF-09489	1	750,000	Rad. Waste
N-02-GF-09489	2	750,000	Rad. Waste
N-02-GF-09489	3	750,000	Rad. Waste
N-02-GF-09489	4	750,000	Rad. Waste
N-02-GF-09489	5	750,000	Rad. Waste
N-02-GF-09489	6	750,000	Rad. Waste
N-02-GF-09489	7	750,000	Rad. Waste
N-02-GF-09489	8	750,000	Rad. Waste
N-02-GF-09490	1	1,300,000	Rad. Waste
N-02-GF-09490	2	1,300,000	Rad. Waste
N-02-GF-09490	3	1,300,000	Rad. Waste
N-02-GF-09490	4	1,300,000	Rad. Waste
N-02-GF-09490	5	1,300,000	Rad. Waste
N-02-GF-09490	6	1,300,000	Rad. Waste
N-02-GF-09490	7	1,300,000	Rad. Waste
N-02-GF-09490	8	1,300,000	Rad. Waste
N-02-GF-09491	1	1,300,000	Rad. Waste
N-02-GF-09491	2	1,300,000	Rad. Waste
N-02-GF-09491	3	1,300,000	Rad. Waste
N-02-GF-09491	4	1,300,000	Rad. Waste
N-02-GF-09491	5	1,300,000	Rad. Waste
N-02-GF-09491	6	1,300,000	Rad. Waste
N-02-GF-09491	7	1,300,000	Rad. Waste
N-02-GF-09491	8	1,300,000	Rad. Waste

List of Tanks to be Removed from Notification List, cont.

N-02-GF-09492	1	1,300,000	Rad. Waste
N-02-GF-09492	2	1,300,000	Rad. Waste
N-02-GF-09492	3	1,300,000	Rad. Waste
N-02-GF-09492	4	1,300,000	Rad. Waste
N-02-GF-09492	5	1,300,000	Rad. Waste
N-02-GF-09492	6	750,000	Rad. Waste
N-02-GF-09492	7	750,000	Rad. Waste
N-02-GF-09492	8	750,000	Rad. Waste
N-02-GF-09493	1	750,000	Rad. Waste
N-02-GF-09493	2	1,030,000	Rad. Waste
N-02-GF-09493	3	1,030,000	Rad. Waste
N-02-GF-09493	4	1,030,000	Rad. Waste
N-02-GF-09493	5	1,030,000	Rad. Waste
N-02-GF-09493	6	1,300,000	Rad. Waste
N-02-GF-09493	7	1,300,000	Rad. Waste
N-02-GF-09493	8	1,300,000	Rad. Waste
N-02-GF-09494	1	1,300,000	Rad. Waste
N-02-GF-09494	2	1,300,000	Rad. Waste
N-02-GF-09494	3	1,300,000	Rad. Waste
N-02-GF-09494	4	1,300,000	Rad. Waste
N-02-GF-09494	5	1,300,000	Rad. Waste
N-02-GF-09494	6	1,300,000	Rad. Waste
N-02-GF-09494	7	1,300,000	Rad. Waste
N-02-GF-09494	8	1,300,000	Rad. Waste
N-02-GF-09495	1	1,300,000	Rad. Waste
N-02-GF-09495	2	1,300,000	Rad. Waste
N-02-GF-09495	3	1,300,000	Rad. Waste

INTER-OFFICE MEMORANDUM
Savannah River Site

17-Feb-1994 08:15am EST

To: See Below

From: Douglas M. Blue (BLUE-DM-L4808 AT A1 AT SASRS2)
Dept: WMRC
Tel : 5578088

Path forward - Handling Rainwater w/ STPB and Benzene (U)

Continuous management of rainwater collected in the ITP test facility dike is labor intensive, time consuming, and subsequently, costly. Accordingly, per ITP Operation's request, ITP Engineering in conjunction with High Level Waste Environmental Compliance (HLWEC) are re-evaluating the current practice of containerizing and transferring rainwater to ETF via the process sewer line for benzene removal. This memo's intent is to status and summarize the re-evaluation effort.

1. Rainwater with concentrations of benzene >= 0.0025 ppm can not be discharged to the basin or creek - this limit is consistent with the South Carolina's Toxic Control Strategy. HLWEC contacted the Environmental Protection Department, Chuck Hayes, with regards to permitting the 8H stormwater retention basin. In order to obtain an industrial wastewater permit, and potentially a higher benzene discharge limit, WSRC would be required to install a secondary containment liner and leak detection devices. Obtaining a permit for the sole purpose of discharging benzene contaminated rainwater does not appear to be cost effective at this time.

2. Although there are no discharge limits for Sodium Tetraphenylborate, the degradation properties of STPB to benzene necessitate testing for free benzene and total benzene potentially present after degradation. Currently, ITP lab's lower detection limits for benzene is 0.001 ppm. However, the inability of the lab to test for STPB prohibits verification that potential benzene levels are below discharge limits. Currently, all rainwater collected in the dike is containerized and sent to ETF. Kathy Johns, ITP Lab Manager, is working with SRTC to develop a sample prep method which will enable detection of low quantities of benzene/STPB.

3. DWPF has received approval from the South Carolina Department of Health and Environmental Control (SCDHEC) to truck cold chemical runs waste water to ETF for treatment. Based upon discussions with the Environmental Protection Department, Bill Payne, ITP's rainwater could be handled in a similar manner contingent upon ETF's and the State's approval. ITP in essence could "piggy back" on DWPF's approval. Mr. Payne feels that verbal notification to the State, with a possible follow-up letter would be all that is necessary. Again, approval from ETF must be obtained by ITP Operations before notification to the State.

4. In light of the aforementioned analytical and management difficulties, ITP Engineering and HLWEC recommend the installation of a temporary tarp over the test facility. This tarp will help prevent the accumulation of rain water in the dike and subsequently alleviate the majority of the associated management difficulties. Per conversation with D.A. Pervis, major modifications to the Safety Evaluation would be required if the tarp was to remain in place during benzene testing. Therefore, it is recommended that the tarp is installed

immediately and removed before the next round of benzene testing. The tarp can be re-install at the completion of testing until the dike is cleaned and sealed.

If you have any questions or comments, please contact me at 7-8088 or pager 2651.

Distribution:

To:	Eddie R. Ennis	(ENNIS-ER-Y6279 @A1@SASRS0)
CC:	B.G. Croley	(CROLEY-BG-Y5688 @A1@SLSRP1)
CC:	Chris J. Baker	(BAKER-CJ-B4996 @A1@SRXSS2)
CC:	Bill Van Pelt	(VANPELT-WB-O7016 AT A1 AT SASRS2)
CC:	Kathy W. Johns	(JOHNS-KW-O8091 AT A1 AT SASRS2)
CC:	CARY B. STEVENS	(STEVENS-CB-O5981 AT A1 AT SASRS2)
CC:	Thomas A. Syfert	(SYFERT-TA-L5282 AT A1 AT SASRS2)
CC:	Arthur W. Wiggins, Jr.	(WIGGINS-AW-O6172 AT A1 AT SASRS2)
CC:	Bill Payne	(PAYNE-WL-Y7708 @A1@SLSRP1)
CC:	Chuck Hayes	(HAYES-CR-Z9722 @A1@SLSRP1)
CC:	Kester Uzochukwu	(UZOCHUKWU-K-L1224 AT A1 AT SASRS2)
CC:	WOODIE L. MELTON	(MELTON-WL-O8975 AT A1 AT SASRS2)
CC:	Andrew P. Christensen	(CHRISTENSEN-AP-O5913 AT A1 AT SASRS2)
CC:	Joel B. Harris	(HARRIS-JB-W2801 AT A1 AT SASRS2)
CC:	Charles G. Lampley 7-8550	(LAMPLEY-CG-O6174 AT A1 AT SASRS2)

INTER-OFFICE MEMORANDUM
Savannah River Site

01-Feb-1994 11:46am EST

To: Chuck Hayes (HAYES-CR-Z9722 @A1@SLSRP1)

CC: Matthew A. Hunter (HUNTER-MA-L2335 AT A1 AT SASRS2)
CC: Allen C. Smith (SMITH-AC-B6354 @A1@SLSRP1)

From: Douglas M. Blue (BLUE-DM-L4808 AT A1 AT SASRS2)
Dept: WMRC
Tel : 5578088

Could you please take a look at this draft... (U)

Comments and questions??

2

INTER-OFFICE MEMORANDUM
Savannah River Site

21-Jan-1994 12:51pm EST

To: Douglas M. Blue (BLUE-DM-L4808 @A1@SASRS2)
To: Daniel C. Wood (WOOD-DC-O6237 @A1@SRXSS2)

From: Allen C. Smith (SMITH-AC-B6354 AT A1 AT SLSRP1)
Dept: SRL/NES
Tel : 7258218

Embeded Filtrate Line Inspection Frequency

Attached is a draft recommendation for extending the inspection frequency based on the low corrosion rates found in testing.

Please review and then we'll talk.

Regards,

Allen

****

WESTINGHOUSE SAVANNAH RIVER COMPANY
INTER-OFFICE MEMORANDUM

January 14, 1994 HLW-ITP-9400**

TO: D. C. Wood, 706-8C B. G. Croley, 241-120H
D. Blue J. Brooke

CC: L. Sumner (ITP File), 704-56H

FROM: A. C. Smith, 706-8C

EVALUATION OF DEGRADATION OF EMBEDDED FILTRATE LINE (U)

Summary

Corrosion testing of 304L stainless steel has shown no indication of either localized or general corrosion. The line is supported and protected against vibration induced fatigue by the concrete wall. Likewise, the wall protects the line against wear and mechanical damage. As a result, the line need not be inspected following every operating cycle.

Background

The line carrying filtrate from the ITP filter to the FHT is imbedded in

the wall of the filter cell for much of its length. Under regulations promulgated after construction, such lines are required to have double containment. An agreement was reached with SCDHEC to perform periodic inspections of the line to verify its integrity, in lieu of replacing it with a double containment line.

Performance of a hydrostatic test on the filtrate line will result in significant radiation exposure to personnel and creation of several gallons of contaminated water. In keeping with the need to keep radiation exposure as low as reasonably achievable, the hydrostatic testing of the line should be done on a frequency consistent with the vulnerability of the line to the various degradation mechanisms.

The forms of degradation or damage which would necessitate inspection of the embedded line are over pressurization, mechanical damage, vibration induced fatigue or wear, erosion and corrosion.

Over pressurization of the system would result in damage to other components before the pressure would be great enough to damage the filtrate line. Inspection for damage due to over pressurization is required only following discovery of pressure damage to other components, such as the filter.

Mechanical damage is not an issue because the line is protected by the concrete wall in which it is embedded.

Vibration induced fatigue and wear are likewise not an issue, for the same reason. That is, the line is supported against vibration by the concrete wall in which it is embedded.

The filtrate contains no slurry and has relatively low velocity and temperature. Under these conditions erosion is not a concern.

Stainless steel corrosion mechanisms include various cracking mechanisms in addition to general corrosion, depending upon the environment. For this reason, the behavior of 304L in the ITP chemical environment has been the studied. The results of these studies are summarized in Reference 1 which concludes that the rate of corrosion would be insignificant. The mechanisms of greatest concern are the cracking processes. The factors which lead to cracking are not present in the ITP environment.

Conclusions

In the absence of any active degradation mechanism, the inspection of the filter following every operating cycle is not justified.

Based on the very low corrosion rates found in testing, the filter inspection frequency can be chosen based on operational considerations rather than degradation concerns.

Recommendations

1. It is recommended that the line be inspected at the time that the corresponding filter is replaced. This will minimize exposure by taking advantage of the cell being open, decontaminated and the removal of the filter as a source.

2. The interval between inspections should not exceed 2.5 years.

3. Whenever more than 18 mos have passed since a line inspection, the

filtrate line should be inspected as part of any maintenance work which necessitates removal of the cell covers.

4. A side stream test chamber for corrosion coupons should be employed on the filtrate line, to monitor material performance.

References

1. Wiersma, B.J., "ITP Filter Corrosion Assessment", SRT-MTS-93-3106, Oct. 4, 1993.

2. Congdon, J.W. , "Evaluation of Corrosion Inhibitors for Washed Precipitate Coupon Test Results", DPST-86-721, Oct. 15, 1986.

3. Wiersma, B.J., "Corrosion Study of Replacement Materials for Hazardous Low Level Waste Processing Tanks", WSRC-TR-91-138, March 28, 1991.

4. Reichman, A.F., "Oxalic Acid Cleaning of Porous Stainless Steel Filters", DPST-84-514, June 11, 1984.

RECOMMENDATIONS

HYDRO ??

- WHAT IS MEANT BY INSPECTION? IN TAR WE SAY WE CANNOT VISUALLY INSPECT!
- HOW ABOUT TEST WHENEVER CELL COVERS ARE REMOVED (PERIOD)?

PAGES 59-61 OF PHASE 1 TAR

Chuck
FYI - DWPF Recycle
Composition

CC: Bill Payne

INTER-OFFICE MEMORANDUM
Savannah River Site

.85
x12
90
85

Date: 26-Jan-1994 10:13 EST
From: Douglas F. Brown
BROWN-DF-O7607
Dept: HLWE
Tel No: x7-1447

TO: Matthew A. Hunter (HUNTER-MA-L2335)

Subject: what benzene related species are on the TCLP/etc lists ?

Since you were out this AM, and I'll be out this PM; perhaps this E-mail will connect us ...

The list of organic chemicals expected in the DWPF recycle stream is changing:
- Once upon a time, it was going to be a few hundred mg/l phenol (benzene-OH) or the related sodium salt (benzene-ONa), along with some benzene.
- Now they are finding that a lot (much?, most?, sometimes all!) of the rings have one or more nitrites on them. Ie nitrobenzene (benzene-NO2) or nitrophenol (O2N-benzene-OH), and di- & tri- nitro species. (PS: once you get enough NO2's on the rings, and accumulate enough of the stuff, it can go boom.) Also amine/aniline species (benzene-NH2). And more complicated mixtures (benzene with -OH and -NO2 and -NH2); or multi-benzene structures (biphenyl, terphenyls), some with OH/NO2/NH2 substitutions.
- Basically any structure you can imagine can be present.
- They are trying to quantify these now, but many are present at <5 mg/l, several at <50 mg/l, and a couple at 100-300 mg/l.

Aren't some of these species on the TCLP characteristic leaching list? Eg, Paul d'Entremont's old list (from 3/90) included 2 mg/l nitrobenzene. Is phenol listed now? What about the isomers of nitro-phenol?

If any of these are on one of the lists, **and** the recycle exceeds the magic values, **then will** we be @#$%~!*-out-of-luck because the only one included in the FFA(?) was benzene (it's on that old TCLP list at 0.5 mg/l) ???

Don't zero in on my naming the TCLP list and FFA specifically, they're just ones that ignorant-old-me is aware of. Be broad minded -- what various lists could get us in hot water? Eg, "they" are expanding the SARA list now?

Who should I be asking these questions? Or has this ground been plowed already? If that is your answer, then I'll question the details, because although the "organics in DWPF recycle" subject is an old one, as best I can find out, that history only included benzene & phenol. Recognition of the -NO2 and -NH2 substitutions is rather new (within the past ~~6 months). And I haven't heard them discussed in a regulatory context yet, so far it is "just" the SRTC types worrying about how much/where/when/why/etc; and the potential explosion concern.

Do you agree that it's time for you "RC" folks to get involved? Nothing real hot yet, but it's not too early to start warming up ...

INTER-OFFICE MEMORANDUM
Savannah River Site

29-Jan-1994 03:43pm EST

To: See Below

From: BRUCE LAWRENCE (LAWRENCE-BM-O4037)
Dept: ENVIRONMENTAL PROTECTION
Tel : 725-3690

Toluene Guidance

The attached note from M. Hagenbarth concerns the tank farm item mentioned in Friday's staff meeting. I wonder how unusual it is to have a commercial chemical product as an integral part of a piece of equipment.

Distribution:

To:	Chuck Hayes	(HAYES-CR-Z9722)
To:	Hal W. Morris	(MORRIS-HW-Y6149)
To:	Jill G. Suhm	(SUHM-JG-T7584)
To:	Sandra J. Carroll	(CARROLL-SJ-Y6910)
To:	WILLIAM J. MALONEY	(MALONEY-WJ-O8567)
CC:	MONTE HAWKINS	(HAWKINS-M-O6779)

INTER-OFFICE MEMORANDUM
Savannah River Site

27-Jan-1994 01:18pm EST

To: See Below

From: Michael J. Hagenbarth
(HAGENBARTH-MJ-L2326 AT A1 AT SASRS2)
Dept: WMRC
Tel : X7-0279

TOLUENE CONTAMINATED EQUIPMENT (U)

Per our telephone conversation today, the following guidance is being provided for disposal of toluene and toluene contaminated equipment. Based on the availability of new information on the contents of the equipment (i.e., receipt of MSDS sheet), this guidance differs from previous guidance provided yesterday. M. Hawkins and B. Lawrence of EPD have concurred with this position:

Assumptions

The equipment to be removed consists of a meter with a probe. The material within the probe is composed of 100% pure toluene and therefore carries the waste codes of U220 (toluene) and D002 (ignitability due to flashpoint <140 degrees Fahrenheit).

Guidance

The equipment can be removed either in one piece to contain the toluene, or cut up as long as the toluene is captured. The preferred method is to remove the equipment in one piece to limit the number of waste streams, however this decision should be made by HP and Engineering personnel depending on factors such as worker exposure.

If the equipment is removed in one piece and the toluene is contained, this material must be placed in Satellite Accumulation Area located at or near the point of generation (provided less than 55 gallons of waste is present). Procedure WM-AP-3003 must be followed when establishing the Satellite Area. If radioactive, the equipment must be managed as mixed waste and carry both the U220 and D002 waste codes.

Should it be necessary to release the toluene from containment (e.g., cut up the equipment) it must be captured. If the toluene is radioactive, it must be placed in a Satellite Accumulation Area, labeled as mixed waste, and carry the U220 and D002 waste codes. The remaining equipment may be placed in the same Satellite Area, carry the same waste codes and also be labeled as mixed waste. If the toluene is not radioactive, it may still be placed in the same Satellite area as the equipment, however a barrier of some kind must be place between the two drums and the toluene drum would not require the mixed waste label (see WM-AP-3003 for more details).

If you have any further questions, please contact me at x7-0279.

MJH

3

Distribution:

To:	George Garcia	(GARCIA-G-L0500 @A1@SLSRP1)
CC:	Garry Davis	(DAVIS-G-O4089 @A1@SASRS0)
CC:	D T BIGNELL	(BIGNELL-DT-O5579 @A1@SLSRP1)
CC:	CARY B. STEVENS (STEVENS-CB-O5981 AT A1 AT SASRS2)	
CC:	Mark S. Peters	(PETERS-MS-O5010 AT A1 AT SASRS2)
CC:	MONTE HAWKINS	(HAWKINS-M-O6779 @A1@SLSRP1)
CC:	BRUCE LAWRENCE	(LAWRENCE-BM-O4037 @A1@SLSRP1)
CC:	Bryan R. Hess	(HESS-BR-Y6210 @A1@SRXSS2)
CC:	William F. Ware	(WARE-WF-O8635 AT A1 AT SASRS2)
CC:	Keith D. Harp	(HARP-KD-O8468 AT A1 AT SASRS2)
CC:	M.D. Buxton	(BUXTON-MD-O6214 AT A1 AT SASRS2)

INTER-OFFICE MEMORANDUM
Savannah River Site

Date: 13-Jan-1994 10:06am EST
From: Douglas M. Blue
BLUE-DM-L4808 AT A1 AT SASRS2
Dept: WMRC
Tel No: 5578088

TO: See Below

Subject: Addition of ethyl acetate waste from ITP lab to Tk 48

As we discussed on January 12, 1994, ITP lab is currently evaluating the use of ethyl acetate. After usage, the lab plans to dispose of the ethyl acetate waste via a lab drain, approximately 1 liter a month, in tank 48. Please notify High Level Waste Environmental Compliance when a final decision to use the chemical is made. The Industrial Wastewater Permit governing ITP requires administrative approval from the Environmental Protection Department for "new" influent wastes to the Tank Farm. This approval is required before any additions of ethyl acetate waste to tank 48 is conducted.

If you have any questions, please call me at 7-8088 or beeper 2651. Thanks.

Distribution:

TO:	James J. Pirkle	(PIRKLE-JJ-L4311 AT A1 AT SASRS2)
CC:	David A. Pervis	(PERVIS-DA-O5645 AT A1 AT SASRS2)
CC:	Kathy W. Johns	(JOHNS-KW-O8091 AT A1 AT SASRS2)
CC:	Bill Van Pelt	(VANPELT-WB-O7016 AT A1 AT SASRS2)
CC:	Chuck Hayes	(HAYES-CR-Z9722 @A1@SLSRP1)
CC:	CARY B. STEVENS	(STEVENS-CB-O5981 AT A1 AT SASRS2)
CC:	Matthew A. Hunter	(HUNTER-MA-L2335 AT A1 AT SASRS2)
CC:	WOODIE L. MELTON	(MELTON-WL-O8975 AT A1 AT SASRS2)
CC:	D T BIGNELL	(BIGNELL-DT-O5579 @A1@SLSRP1)

~~Bruce,~~ Bill Wierzbicki / Stu Evans

BC

There is not enought information or time available to really assess the regulatory impacts of the various cases. I would suggest that they include a statement under the generic comments that:

In all cases, except for case 1, the FFA and FFCA would have to be examined to determine if there were any impacts. In addition since all of the cases, except for case 1, involve a change in the characteristics of the waste being sent to the tank farms, possibly ETF, DWPF, and Z-Area (increased volumes, additives, dilution of the Pu rather than processing) the operating permits for the tank farm, ETF, Z-Area and DWPF would need to be evaluated against each case. I suspect that the air emissions will be different that during normal processing this should also examined.

I would also beef up the generic statement on RCRA compliance. Permitting of the canyons as RCRA facilities would be a time consuming process and could require compliance agreements.

Bill / Stu

Above are some ideas about the "Disposition of Pu in F Canyon" draft you asked us to look at this morning.

Bruce Lawrence
1/7/94

cc: Monte Hawkins
Danny Dunaway
Bill Maloney

First

WESTINGHOUSE SAVANNAH RIVER COMPANY
INTER-OFFICE MEMORANDUM

NMP-ESE-94-000X
Retention

DATE: January 6, 1994

TO:

FROM:

Disposition of Plutonium in F-Canyon

The plutonium in F Canyon, and in other materials at SRS which have not been processed, has value as a weapons material and as an energy source. The design intent and mission of F Canyon and FB-Line continues to be the recovery of plutonium in a form that preserves such value. The ultimate disposition of these materials has not been determined.

The question has been raised about the possibility of disposing of plutonium currently in F Canyon to the waste tanks. Recognizing that the amount of this material is large, such a decision would be a significant change in facility mission and also would be a declaration that the material is a waste. The NEPA process must be utilized for making a decision of this magnitude. (Reference x). If the outcome of the NEPA process was that the material in F Canyon would be disposed to the SRS waste tanks, F Canyon and all processes used to manage the material (storage, treatment, and handling) would be subject to RCRA regulations.

The purpose of this document is to describe cases that could be considered in such decision-making and to compare these cases to the current operating plans for SRS facilities. None of these cases can be accomplished within currently defined technology, risk, and waste tank space availability.

A description of each case and the specific concerns and constraints for each case are described in the attached.

/sbk

Att.

ATTACHMENT

CASE STUDIES FOR DISPOSITION OF PLUTONIUM IN F CANYON

Prepared by

L.S. Evans
M.C. Chandler
D.F. Chester

Contents

		Page
I.	Summary	2
II.	Case Selection	?
III.	Case Definitions and Issues	?
IV	Case Comparisons	?

F. Summary

These cases were prepared as a result of questions raised about the possibility of disposing of plutonium currently in F Canyon to the waste tanks. Except for Case 1, each case was prepared and issues were developed from the perspective of discarding all plutonium in F Canyon ~~would be discarded~~, in the manner defined for the particular case, to the waste tanks.

Case 1 represents operating F Canyon using the Purex process, which is the planned operation. Only the currently planned operation of F Canyon and F B-Line can be accomplished within currently defined technology, risk, and waste tank space availability.

Several generic issues exist, as follows:

1. No consideration was given to the potential outcome of other studies which are in progress. In particular studies evaluating disposition of Americium/Curium solutions in F Canyon and Neptunium solution in H Canyon were not considered. The outcome of these studies could have significant impact on High Level Waste (HLW) operations.

2. The waste tank space available for potential disposal is limited to that which is currently forecasted to be used for F Canyon operation, and miscellaneous waste transferred through F Area facilities. Regulatory commitments for DWPF startup and waste tank use constrain the available space.

3. Waste minimization is explicitly not maintained in these cases except for Case 1. In all other cases the quantity and content of waste is higher than currently forecasted

2. Full RCRA Compliance would be required for F Canyon activities except for case 1, which is the only case in which the plutonium solutions are not managed as ~~haz~~ mixed hazardous waste

3. NEPA issues exist for all cases.

6. All manpower estimates are given as man months of effort. These are not equal to ~~chronological~~ calendar months. The critical technical resources which would be required to resolve issues are already fully utilized. ~~In addition to the new~~ ~~to the studies~~ New studies would have to be prioritized vs. existing commitments ~~and would~~ to determine actual schedules for accomplishing such work.

All cases and issues are summarized in Table 1. ~~The~~ Section III, Case Definitions and Issues, ~~explains~~ contains a detailed description of the issues associated with ~~each~~ individual cases.

II. Case Selection

A brief explanation of ~~the~~ each case and the reason for selection follows:

<u>Case 0</u> This case represents the average waste conditions that exist in the F Area waste tanks. This case was selected because it represents the closest approximation ~~of~~ to current F Area waste tank ~~conditions~~ contents. However, ~~the~~ this waste, and the waste for all cases except Case 1, ~~would have to~~ would be a synthetic (manufactured) waste.

<u>Case 1</u> This case represents the ~~normal~~ historical F Canyon operation (PUREX). This case was selected because it is the basis for ~~comparison with~~ comparing planned operation with all other cases.

<u>Case 2</u> This case represents the waste currently generated from F Canyon for the occasional, non-routine, waste transfer which contains discardable plutonium quantities of

Case 2 (cont'd) This case was selected to make a literal comparison to the procedures currently used to control waste transferred from F Canyon.

Case 3 This case represents waste which has a fissile Pu content equivalent to that ~~waste with the~~ found in the existing waste tank which contains the highest concentration of fissile material. This case was selected because it represents the existing bounding ~~of~~ condition for fissile material concentration in sludge.

Case 4 This case represents waste which has an activity equivalent ~~to that found in the~~ to the average source term value for H area waste tanks, ~~[illegible] selected because it represents~~ and was selected for this reason. The average source term value for H area waste tanks is higher than F area waste tanks.

Case 5 This case represents waste which has an activity equivalent to the highest source term value of any existing waste tanks, ~~and~~ This case was selected because it represents the existing bounding condition for source term in waste tank sludge.

III. Case Definitions and Issues

Case	Page
0	?
1	?
2	?
3	?
4	?
5	?

CASE "0"

DEFINITION defined [redacted] such that
is [redacted]

This case ~~involves~~ ~~assuming~~ the plutonium concentration in the resulting sludge is typical of normal F-area sludge, 0.07 grams Pu per liter of settled sludge volume. Dilution of the plutonium will be required and the dilution recipe would incorporate the normally associated neutron poisons and other sludge components easily assimilated by sludge processing and eventually DWPF.

~~Significant Impacts: The projected liquid and sludge volume generated by this case can not be accepted by HLW~~ the ~~High Level Waste~~

SAFETY ISSUE - CRITICALITY SAFETY

During normal operation Pu is a minor constituent of the insoluble solids entering waste tanks. The following conditions are present in the F area waste tanks and are typical of the objectives of this case.

- Most Kg of eqPu in a tank = 59kg
- Highest concentration in sludge volume = 0.12 g/liter, avg.= 0.07 g/l

When uniform distribution of Pu is assumed criticality safety can be described by concentration and areal density. For non-uniform conditions reliance on the very limited eqPu mass transferred and other waste constituents, which act as neutron poisons (Fe and Mn) and/or diluents (dep.U), is required. depleted

		Average	
	safe	HHW	LHW
Fe:Pu***	160:1	184:1	703:1
Mn:Pu***	32:1	69:1*	47:1
depU:Pu	192:1	243:1	15:1**

* Mn in HHW only in early years
** Less depU in LHW but also lower Pu conc.
*** Combinations of Fe and Mn requires less

1. Ongoing Criticality Activities Associated With Normal Conditions

- Documentation of process stream and waste tank historical conditions (FY94)

- Co-precipitation and sludge processing laboratory studies to better define Pu behavior in waste from normal processing. (2nd QTR CY94)

- Improving Technical Basis documentation for Safety Analyses (FY94).

- Waste Acceptance Criteria (WAC) for safety basis agreement between Sep. operations and HLW (draft issued) (Rev. 1 due 4/94)
  - WAC expected to result in new requirements/limits in Separation's

2. Issues for ~~Case 0 [Remaining~~ Operation Within the Neutralization Tank Mass Limit~~]~~

Remaining within the current mass limit controls of the neutralization tank provides conditions whereby safety limits must be violated for an abnormal transfer to waste. Since the limit is very low the probability of sufficient mass in a single transfer for criticality to occur has been evaluated as a non-credible occurrence.

switch order

This case involves controlled batching of material for transfer to the waste tanks on a continuous basis. Normally, the available plutonium in waste is solely due to process losses. This ~~will~~ would require a re-analysis of the criticality risk since this is a change in normal operation. For this case, the impact of such an analysis ~~is~~ would be expected to be ~~minimal~~ small.

- Neutralization Tank Risk Analysis (2-3 months, SRTC-FSAS)

3. Issues for ~~Case 0 [~~Operation Outside of the Neutralization Tank Mass Limit]

~~To~~ Operability could be improved if reduce the number of transfers and ~~reduce~~ minimize the volume of liquid sent to waste ~~it would be advantageous to~~ transfer would a greater mass of Pu. This case would be outside the safety analysis for both the canyon and HLW. A nuclear criticality safety risk analysis would be required for the neutralization tank (agitated) and the waste receipt pump tank (unagitated). This analysis must address double contingency conditions and establish the probability of criticality.

in each transfer batch. In this case a much higher criticality mass limit would have to be established for the neutralization tank.

- Neutralization Tank Risk Analysis (3-4 months, SRTC-FSAS)
- Pump Tank Risk Analysis (1 months, SRTC-FSAS)
- Nuclear Criticality Safety Analysis and USQD/SAR addendum (4 months, Sep & HLW Eng.)
- Internal and External Independent Review (6 months)

wb = would be

If the probability can not be demonstrated to be incredible, a consequence analysis of the pump tank and waste tank ~~is~~ were determined to be required. If the expected dose from a criticality ~~is~~ would be >12 R a criticality alarm system ~~is~~ would be required, if <12 R a criticality detection system ~~is~~ would be required. In either case major changes in training, procedures, emergency planning, and safety analysis would be required.

- Pump Tank Consequence Analysis (4 months, SRTC-SC)
- Waste Tank Consequence Analysis (1-2 months, SRTC-SC) [one was already initiated for another tank so less time ~~is~~ wb needed]

remove underlining

If NIMs are required ;
- NIM placement analysis (1months, SRTC-SCS)
- Changes to Emergency Planning in HLW (4 months to initiate changes, undefined but major impact on operations)
- Safety Class Equipment installation (unknown impact)

If only Incident Detection
- Design and procurement (unknown impact)
- Safety Class Equipment installation (unknown impact)

SAFETY ISSUE - SOURCE TERMS

For this case there ~~are~~ wb no source term issues. The plutonium ~~will~~ would be diluted to normal conditions and therefore ~~does~~ would not increase the dose risk.

TECHNICAL ISSUES

In this case the sludge ~~is~~ wb very similar to normal F-area sludge and ~~does~~ would not represent a new technical issue.

?

OPERATIONAL ISSUES

This case results in a volume of waste the tank farm ~~can not tolerate~~ would not ~~[illegible]~~ contain within the next several years. Requirements for sludge, supernate and salt volume ~~will~~ require possibly a combination of the following; new waste tanks, use of old tanks not meeting regulatory requirements, delaying DWPF operations, completion of F to H area line, installation of waste removal equipment, etc.

REGULATORY ISSUES

Receipt of the volume of waste generated by this case ~~will~~ would result in an impact to regulatory agreements. Could Delays ~~will~~ occur in removing from service old tanks and tanks that have leaked. ~~May require an~~ Environmental Impact Statement for the delays and aging tank farm equipment ~~might~~ be necessary in addition to an overall EIS to address disposal of such a large quantity of Pu.

CASE "1"

DEFINITION

This case ~~involves~~ is processing in the canyon facilities as currently defined by Safety Analyses.

~~Significant Impacts: There are no impacts.~~

SAFETY ISSUE - CRITICALITY SAFETY

During normal operation Pu is a minor constituent of the insoluble solids entering waste tanks. The following conditions are present with F area waste tank and are typical for the objectives of this case,

- Most Kg of eqPu in a tank = 59kg
- Highest concentration in sludge volume = 0.12 g/liter, avg.= 0.07 g/l

When uniform distribution of Pu is assumed criticality safety can be described by concentration and areal density. For non-uniform conditions reliance on the very limited eqPu mass transferred and other waste constituents, which act as neutron poisons (Fe and Mn) and/or diluents (dep.U), is required.

		Average	
	safe	HHW	LHW
Fe:Pu***	160:1	184:1	703:1
Mn:Pu***	32:1	69:1*	47:1
depU:Pu	198:1	243:1	15:1**

* Mn in HHW only in early years
** Less depU in LHW but also lower Pu conc.
*** Combinations of Fe and Mn requires less

Ongoing Criticality Activities Associated With Normal Conditions

- Documentation of process stream and waste tank historical conditions (FY94)
- Co-precipitation and sludge processing laboratory studies to better define Pu behavior in waste from normal processing. (2nd QTR CY94)
- Improving Technical Basis documentation for Safety Analyses (FY94)

- Waste Acceptance Criteria for safety basis agreement between Sep. and HLW (draft issued) (Rev. 1 due 4/94)
  - WAC expected to result in new requirements/limits in Separation's

SAFETY ISSUE - SOURCE TERMS

For this case there are no source term issues. The plutonium will be diluted to normal conditions and therefore does not impact the dose risk.

TECHNICAL ISSUES

There are no technical issues for this case.

OPERATIONAL ISSUES

This case ~~has been accounted~~ is in the planning basis for in HLW operations. Space has been ~~made~~ reserved ~~available~~ based on forecasted transfer volumes.

REGULATORY ISSUES

There ~~are~~ is no regulatory issues other than the overall EIS. Normal Separation processing is addressed by the HLW Waste Water Permit.

CASE "2"

This ~~would~~ results in a plutonium concentration in the settled sludge on ~.4 g Pu per liter of settled sludge, which is the maximum value experienced in tank farm

DEFINITION

This case ~~involves~~ is based on utilizing the current special procedure for non-routine waste disposal from Separations. Addition of Depleted uranium ~~is used~~ controlled to dilute the fissile isotopic content of the insoluble solids to an equivalent content of natural uranium. This procedure has been in place for non-routine transfers only, ~~The procedure remains~~ which are controlled within the current safety limits imposed on the canyon waste neutralization tank. However, if ~~this~~ procedure were used to ~~[illegible]~~ dispose of large quantities of fissile plutonium the risk of the operation ~~[illegible]~~ is significantly increased.

~~Significant impacts: This case generates a large volume of sludge and liquid volume similar to case 0. In addition, the increase in uranium mass in the waste would need to be evaluated for impact on DWPF.~~

CRITICALITY SAFETY

Insert (A) here

~~The criticality safety issues associated with this case are not very different from those expressed in case 0. One major difference related to criticality safety is the batching control. In case 0 the concentration is controlled whereas~~ In this ~~case~~ manner the fissile enrichment ~~will~~ would be controlled, ~~which will control the plutonium concentration at a different value than case 0. This new plutonium concentration will be greater than the typical F-area sludge value.~~

Insert (B)

Remaining within the current mass limit controls of the neutralization tank ~~would~~ provide~~s~~ conditions whereby safety limits must be violated for an abnormal transfer to waste. Since the limit is very low, the probability of sufficient mass in a single transfer for criticality to occur has been evaluated as a non-credible occurrence.

This condition has been acceptable for the few non-routine waste transfers. Transferring a large quantity of non-routine material on a continuous basis ~~will~~ would require a re-analysis of the criticality risk since the frequency of these transfers ~~is not~~ would be increased and the chemistry of the system (just depU and fissile Pu) ~~[illegible]~~ not safe in all situations.

- Neutralization Tank Risk Analysis (2-3 months, SRTC-FSAS)

If the probability of criticality were not determined to be ~~cannot be demonstrated to be~~ incredible, a consequence analysis of the pump tank and waste tank ~~is~~ wb required. If the expected dose from a criticality ~~is~~ >12 R a criticality alarm system ~~is~~ wb required, if <12 R a criticality detection system ~~is~~ wb required. In either case major changes in

were determined to be

training, procedures, emergency planning, and safety analysis would be required.

Remove lines

- Pump Tank Consequence Analysis (4 months, SRTC-SC)
- Waste Tank Consequence Analysis (1-2 months, SRTC-SC) [one was already initiated for another tank so less time ~~is~~ wb needed]

If NIMs are required;
- NIM placement analysis (1 months, SRTC-SCS)
- Changes to Emergency Planning in HLW (4 months to initiate changes, undefined but major impact on operations)
- Safety Class Equipment installation (unknown impact)

If only Incident Detection;
- Design and procurement (unknown impact)
- Safety Class Equipment installation (unknown impact)

SAFETY ISSUE - SOURCE TERMS

For this case the expected plutonium concentration ~~is~~ wb such that the dose potential remains less than the potential from H-area tanks, but greater than the typical F-area value.

would ~~be significantly lower~~

TECHNICAL ISSUES

The increased mass of uranium in the F-area tanks ~~will~~ would need to be evaluated for blending requirements to ~~not~~ determine potential impact on DWPF certification.

OPERATIONAL ISSUES

This case results in a volume of waste that the tank farm ~~may not~~ may be able to contain ~~tolerate in the near future~~. in the next few years.

REGULATORY ISSUES

This case does not represent a significant change to the waste received but ~~will require~~ would be required evaluation versus regulatory requirements. Not expected to be a significant issue.

CASE "3"

DEFINITION

This case involves controlling the plutonium concentration in the waste to the maximum value experienced in the tank farm, 0.4 g Pu per liter of settled sludge volume. This case requires neutron poisons, preferably Fe and Mn, to be present and control of dilution.

Significant Impact: The criticality safety risk analysis associated with control of the batching operation is the most significant issue.

SAFETY ISSUE - CRITICALITY SAFETY

The criticality safety issues associated with this case are ~~not very different from cases 0 and 2, except~~ the plutonium concentration will be controlled at a higher value than usual for F-area conditions. This case ~~is more~~ closely related to case 0 for the condition where the neutralization tank mass limit ~~will~~ be exceeded. The resulting sludge matrix ~~will still~~ be safe by ~~virtue of concentration and poison content. Neutron poison remain a secondary control to concentration and have been evaluated for the following conditions:~~

		wt. ratio
Fe only	Fe:eqPu	160:1
Mn only	Mn:eqPu	32:1
Fe and Mn	Fe:Mn:eqPu	30:30:1

This case is outside the safety analysis for both the canyon and HLW due to the need to control the plutonium ~~concentration~~ enrichment and operating the neutralization tank at a higher mass value than currently allowed. A nuclear criticality safety risk analysis would be required for the neutralization tank (agitated) and the waste receipt pump tank (unagitated). This analysis must address double contingency conditions and establish the probability of criticality.

- Neutralization Tank Risk Analysis (3-4 months, SRTC-FSAS)
- Pump Tank Risk Analysis (1 months, SRTC-FSAS)
- Nuclear Criticality Safety Analysis and USQD (4 months, Sep & HLW Eng.)
- Internal and External Independent Review (6 months)

were determined to be

If the probability ~~can~~ were not be demonstrated to be incredible, a consequence analysis of the pump tank and waste tank ~~is~~ are required. If the expected dose from a criticality ~~is~~ are >12 R a criticality alarm system ~~is~~ are required, if <12 R a criticality detection system ~~is~~ are required. In either case major changes in training, procedures, emergency planning, and safety analysis would be required.

remove line

- Pump Tank Consequence Analysis (4 months, SRTC-SC)
- Waste Tank Consequence Analysis (1-2 months, SRTC-SC) [one was already initiated for another tank so less time ~~is~~ was needed]

If NIMs are required
- NIM placement analysis (1months, SRTC-SCS)
- Changes to Emergency Planning in HLW (4 months to initiate changes, undefined but major impact on operations)
- Safety Class Equipment installation (unknown impact)

If only Incident Detection
- Design and procurement (unknown impact)
- Safety Class Equipment installation (unknown impact)

SAFETY ISSUE - SOURCE TERMS

For this case the resulting sludge source term due to the increased plutonium concentration ~~is~~ was greater than F-area conditions but less than H-area conditions.

TECHNICAL ISSUES

In this case the sludge ~~is~~ was very similar to normal F-area sludge except the plutonium concentration ~~is~~ was higher. The higher plutonium content ~~is~~ was not expected to impact DWPF processing once the sludge ~~is~~ was blended in HLW.

OPERATIONAL ISSUES

This case results in a volume of waste the tank farm may be able to ~~tolerate~~ contain in the n~~ear future~~ next few years

REGULATORY ISSUES

There are no regulatory issues. The increased plutonium concentration is greater, but not greater than H-area conditions. Notification may be all that is required.

CASE "3"

DEFINITION

This case is based on ~~involves~~ controlling the plutonium concentration in the waste to the maximum value experienced in the tank farm, 0.4 g Pu per liter of settled sludge volume. This case requires neutron poisons, preferably Fe and Mn, to be present and control of dilution.

~~Significant Impact: The criticality safety risk analysis associated with control of the batching operation is the most significant issue.~~

SAFETY ISSUE - CRITICALITY SAFETY

Criticality issues for

The criticality safety issues associated with this case are similar to Case 2 in that ~~not very different from cases 0 and 2, except~~ the plutonium concentration will be controlled at a higher value than usual for F-area conditions. This case will be ~~is more~~ closely related to case 0 for the condition where the neutralization tank mass limit would ~~will~~ be exceeded. The resulting sludge matrix would ~~will still~~ be safe by control ~~virtue~~ of concentration and poison content. Neutron poison ~~remains~~ is a secondary control to concentration and has ~~have~~ been evaluated for the following conditions:

controlled to be

		wt. ratio
Fe only	Fe:eqPu	160:1
Mn only	Mn:eqPu	32:1
Fe and Mn	Fe:Mn:eqPu	30:30:1

This case will be ~~is~~ outside the safety analysis for both the canyon and HLW due to the need to control the plutonium concentration and operating the neutralization tank at a higher mass value than currently allowed. A nuclear criticality safety risk analysis would be required for the neutralization tank (agitated) and the waste receipt pump tank (unagitated). This analysis must address double contingency conditions and establish the probability of criticality.

- Neutralization Tank Risk Analysis (3-4 months, SRTC-FSAS)
- Pump Tank Risk Analysis (1 months, SRTC-FSAS)
- Nuclear Criticality Safety Analysis and USQD (4 months, Sep & HLW Eng.)
- Internal and External Independent Review (6 months)

were determined to be

If the probability ~~can~~ were not be demonstrated to be incredible, a consequence analysis of the pump tank and waste tank ~~is~~ are required. If the expected dose from a criticality ~~is~~ is >12 R a criticality alarm system ~~is~~ is required, if <12 R a criticality detection system ~~is~~ is required. In either case major changes in training, procedures, emergency planning, and safety analysis would be required.

- Pump Tank Consequence Analysis (4 months, SRTC-SC)
- Waste Tank Consequence Analysis (1-2 months, SRTC-SC) [one was already initiated for another tank so less time ~~is~~ is needed]

Remove lines

If NIMs are required
- NIM placement analysis (1months, SRTC-SCS)
- Changes to Emergency Planning in HLW (4 months to initiate changes, undefined but major impact on operations)
- Safety Class Equipment installation (unknown impact)

If only Incident Detection
- Design and procurement (unknown impact)
- Safety Class Equipment installation (unknown impact)

SAFETY ISSUE - SOURCE TERMS

For this case the resulting sludge source term due to the increased plutonium concentration ~~is~~ is greater than F-area conditions but less than H-area conditions.

TECHNICAL ISSUES

In this case the sludge ~~is~~ is very similar to normal F-area sludge except the plutonium concentration ~~is~~ is higher. The higher plutonium content ~~is~~ is not expected to impact DWPF processing once the sludge ~~is~~ was blended in HLW.

OPERATIONAL ISSUES

This case results in a volume of waste the tank farm may be able to ~~tolerate~~ contain in the ~~near future.~~ next few years.

REGULATORY ISSUES

other than an overall EIS.

There ~~are~~ wb no regulatory issues. The increased plutonium concentration is greater [redacted], but not greater than H-area conditions. Notification may be all that ~~is~~ wb required.

CASE "4"

DEFINITION

This case ~~involves~~ is based on controlling the plutonium concentration in the waste to the average source term conditions experienced in H-area, this allows 2.5 g Pu per liter of settled sludge volume. This case would ~~requires~~ require neutron poisons, possibly a combination of Fe, Mn, and Gd, since the plutonium concentration is in excess of conditions experienced in ~~normal~~ existing tank farm operations.

Significant Impact: ~~The~~ criticality safety risk analysis associated with control of the batching operation and relying ~~on neutron poisons for criticality safety~~ is a significant issue.

CRITICALITY SAFETY

This case goes beyond conditions bounded by current waste sludge. The much higher concentration of Pu in the precipitate formed during neutralization must be evaluated for it's impact on HLW. A strong technical basis ~~will~~ would be required ~~proving~~ that the precipitate ~~will~~ would remain uniformly mixed with neutron poisons during transfer, sludge settling, sludge processing and during DWPF processing.

- ~~Required~~ Co-precipitation and sludge processing studies ~~to~~ would be required and would have to establish a technical basis for criticality safety for this case to be viable.
  - Fe and Mn studies underway would need to be expanded to higher Pu concentrations. (4months added to current schedule, SRTC)
  - Gd study conditions would need to be defined and studies ~~initiated~~ conducted (8months, SRTC)

- Since neutron poisons ~~will~~ would be required as a primary control, criticality safety calculations ~~will~~ would be required and would have to demonstrate ~~that~~ nuclear criticality safety could be maintained
  - For Fe and Mn the cross section variability studies require completion. (This study to begin after new codes adapted and certified on site) Lack of validating critical experiments will impact technical acceptability. ***May require critical experiments.*** (unknown impact)

  - For Gd the cross section data sets require validation and bias adjustment for use on site. Also lack of validating critical experiments will impact technical acceptability. ***May require critical experiments.*** (unknown impact)

• Nuclear Criticality Safety Analysis and USQD (12 months, Sep & HLW Eng.)

• Internal and External Independent Review (6 months)

The following issues are similar to those described for case~~s~~ 0,2, and 3 above but will require more effort and rigor due to relying on neutron poisons alone for criticality safety.

This case is outside the safety analysis for both the canyon and HLW. A nuclear criticality safety risk analysis would be required for the neutralization tank (agitated) and the waste receipt pump tank (unagitated). This analysis must address double contingency conditions and establish the probability of criticality.

• Neutralization Tank Risk Analysis (3-4 months, SRTC-FSAS)
• Pump Tank Risk Analysis (1 months, SRTC-FSAS)
• Nuclear Criticality Safety Analysis and USQD (3-4 months, Sep & HLW Eng.)

If the probability ~~can~~ were not be demonstrated to be incredible, a consequence analysis of the pump tank and waste tank ~~is~~ were determined to be required. If the expected dose from a criticality ~~is~~ was >12 R a criticality alarm system ~~is~~ was required, if <12 R a criticality detection system ~~is~~ was required. In either case major changes in training, procedures, emergency planning, and safety analysis would be required.

• Pump Tank Consequence Analysis (4 months, SRTC-SC)
• Waste Tank Consequence Analysis (1-2 months, SRTC-SC) [one was already initiated for another tank so less time ~~is~~ was needed]

remove lines

<u>If NIMs are required</u>
• NIM placement analysis (1months, SRTC-SCS)
• Changes to Emergency Planning in HLW (4 months to initiate changes, undefined but major impact on operations)
• Safety Class Equipment installation (unknown impact)

<u>If only Incident Detection</u>
• Design and procurement (unknown impact)
• Safety Class Equipment installation (unknown impact)

<u>SAFETY ISSUE - SOURCE TERMS</u>

For this case the resulting sludge source term due to the increased plutonium concentration ~~is~~ was much greater than F-area conditions but remains less than H-area conditions.

Average H-area conditions = 6.3 E+8 rem/gallon of sludge (actinides)

F-area Pu normalized dose value = 6.7 E+7 rem/gram

To remain within the average H-area conditions the Pu concentration ~~can~~ could not ~~to~~ allowed exceed 9.4 grams/gallon or 2.5 grams/liter.

TECHNICAL ISSUES

The higher plutonium content ~~is~~ would not be expected to impact DWPF processing once the sludge ~~is~~ was blended in HLW.

OPERATIONAL ISSUES

This case results in a reasonable volume of waste which could be contained in the F area ~~the~~ tank farm. ~~can accommodate~~.

REGULATORY ISSUES

~~There are expected to be~~ regulatory issues due to the increased plutonium concentration. ~~An~~ The Environmental Impact Statement may be required to specifically address the

CASE "5"

DEFINITION

This case is based on ~~involves~~ controlling the plutonium concentration in the waste to the highest source term conditions experienced in the Tank Farm, allowing 16 g Pu per liter of settled sludge volume. This case requires neutron poisons, expected to require Gd, since the plutonium concentration is well in excess of conditions experienced in normal tank farm operations.

Significant Impact: The criticality safety risk analysis associated with control of the batching operation and relying on neutron poisons for criticality safety is a significant issue.

CRITICALITY SAFETY

This case goes beyond conditions bounded by current waste sludge. The much higher concentration of Pu in the precipitate formed during neutralization must be evaluated for it's impact on HLW. A strong technical basis would ~~will~~ be required and would have to prove that ~~proving~~ the precipitate would ~~will~~ remain uniformly mixed with neutron poisons during transfer, sludge settling, sludge processing and during DWPF processing.

- ~~Required~~ Co-precipitation and sludge processing studies would be required and would have to ~~to~~ establish a technical basis for criticality safety for this case to be viable.
  - Gd study conditions would need to be defined and studies ~~initiated~~ conducted (8months, SRTC)
- Since neutron poisons would ~~will~~ be required as a primary control criticality safety calculations would ~~will~~ be required and would have to demonstrate that nuclear criticality safety could be maintain
  - For Gd the cross section data sets require validation and bias adjustment for use on site. Also lack of validating critical experiments will impact technical acceptability. ***May require critical experiments.*** (unknown impact)

- Nuclear Criticality Safety Analysis and USQD (12 months, Sep & HLW Eng.)

- Internal and External Independent Review (6 months)

The following issues are similar to those described for case 0,2, and 3 above but will require more effort and rigor due to relying on neutron poisons alone for criticality safety.

This case is outside the safety analysis for both the canyon and HLW. A nuclear criticality safety risk analysis would be required for the neutralization tank (agitated) and the waste receipt pump tank (unagitated). This analysis must address double contingency conditions and establish the probability of criticality.

- Neutralization Tank Risk Analysis (3-4 months, SRTC-FSAS)
- Pump Tank Risk Analysis (1 months, SRTC-FSAS)
- Nuclear Criticality Safety Analysis and USQD (3-4 months, Sep & HLW Eng.)

If the probability ~~can~~ were not be demonstrated to be incredible, a consequence analysis of the pump tank and waste tank were determined to be required. If the expected dose from a criticality is >12 R a criticality alarm system is required, if <12 R a criticality detection system is required. In either case major changes in training, procedures, emergency planning, and safety analysis would be required.

- Pump Tank Consequence Analysis (4 months, SRTC-SC)
- Waste Tank Consequence Analysis (1-2 months, SRTC-SC) [one was already initiated for another tank so less time is needed]

X fines

<u>If NIMs are required</u>
- NIM placement analysis (1months, SRTC-SCS)
- Changes to Emergency Planning in HLW (4 months to initiate changes, undefined but major impact on operations)
- Safety Class Equipment installation (unknown impact)

<u>If only Incident Detection</u>
- Design and procurement (unknown impact)
- Safety Class Equipment installation (unknown impact)

SAFETY ISSUE - SOURCE TERMS

For this case the resulting sludge source term due to the increased plutonium concentration is much greater than F-area conditions and creates a small volume of waste at the bounding conditions found in H-area waste.

Highest H-area conditions = 4.1 E+10 rem/gallon of sludge (actinides)

F-area Pu normalized dose value = 6.7 E+7 rem/gram

To remain within the average H-area conditions the Pu concentration ~~can~~ could not be allowed to exceed 61 grams/gallon or 16 grams/liter.

TECHNICAL ISSUES

The higher plutonium content ~~is~~ was not expected to impact DWPF processing once the sludge ~~is~~ was blended in HLW.

OPERATIONAL ISSUES

This case results in a volume of waste which could be contained in the F area ~~the~~ tank farm, ~~can accommodate.~~

REGULATORY ISSUES

~~There are expected to be regulatory~~ issues due to the increased plutonium concentration. ~~An~~ The Environmental Impact Statement may be required ~~to~~ specifically address the

IV Case Comparisons

The technical feasibility of each case can be ~~[illegible]~~ judged based on the significance and range of technical, safety, and regulatory issues that pertain to each case. Case 1 is the only case for which ~~these issues [illegible]~~ which has no unresolved issues from the perspective of waste generation. Case 0 is the next most technically feasible case, ~~[illegible]~~ ~~[illegible]~~ ~~[illegible]~~ ~~[illegible]~~ ~~[illegible]~~ ~~[illegible]~~ ~~[illegible]~~ ~~[illegible]~~ ~~[illegible]~~ ~~[illegible]~~ ~~[illegible]~~ ~~[illegible]~~ ~~[illegible]~~ ~~[illegible]~~ None of the other cases ~~could be~~ are considered technically feasible. ~~at this time~~

The number of unevaluated safety ~~and tech~~ issues on the lack of demonstrated process chemistry ~~prohibit~~ prevent these cases from being considered technically feasible. The scope and depth of studies which would be required to evaluate Cases 4 and 5 ~~are~~ would ~~be of~~ ~~a~~ larger than for Cases 2 and 3, however in all cases the time required to determine feasibility is judged to be multiple years. ~~The relationship of which~~

Figure ~~2~~ 1 provides a visual depiction of the ~~combined~~ combination of technical feasibility and waste volume factors. Case 1 is the only case which ~~waste~~ can be accomplished within currently defined technology, risk, and waste tank space availability. The ~~judgment~~ categorization ~~ranking~~ of cases for waste generation ~~waste~~ acceptability was based on the waste generation factors for each case (see below) and the ~~quantity of~~ forecast for waste tank space availability, and the quantity of plutonium in F Canyon.

IV. Case Comparisons (cont'd)

Waste generation factors were calculated based on the assumptions made in the individual case definitions. ~~[illegible]~~ Results are shown on Table 2. Figure 2 compares the waste volume generated per kg discarded to ~~waste~~ (~~[illegible]~~ for case 1; per kg processed). Case 1 represents the ~~most~~ minimum waste disposal case by far. This is the base case for the current waste forecast. ~~Cases 4 and 5 can be~~ The waste generation factors for Cases 4 and 5 are low enough that ~~the plutonium~~ all waste generated could be discarded to the waste tanks in the near future, if these were technically feasible cases. ~~Cases 2 and 3~~ The waste generation factors for Cases 2 and 3 are ~~large~~ small enough that waste tank space could become available in the next few years, if these were technically feasible cases. ~~[illegible]~~

The waste generation factor for case 0 is so large that ~~[illegible]~~ it is ~~not~~ a viable case.

Table D

F-Canyon Solution Disposal ~~Comparison~~

Calculation Results

1/4/94

Case		I	II	III	IV	V	VI	VII (PUREX)
	Pu basis, kg	1	1	1	1	1	1	1
Poison	Depleted U, lb	1,000	–	–	–	–	–	10[e]
	Fe + Mn, lb (Fe:Mn:Pu = 30:30:1)	–	235[c]	234	–	–	–	–
	Fe + Mn, lb (Fe:Mn:Pu = 20:30:1)	–	–	–	190	–	–	–
	Gd, lb (Gd:Pu = 5:1)	–	–	–	–	14.7[d]	–	–
	Gd, lb (Gd:Pu = 1.32:1)	–	–	–	–	–	3.9	–
To 241-F	Volume, gal	3,000[b]	1,550	479	474	251	244	85
	Sludge, lb	1,280	1,215	240	195	17.2	8.3	17
	Sludge, *l*	2,490	2,360	465	378	33.4	16	9
	Eq. Pu g/*l* sludge	0.38	0.4	2.0	2.5	28.2	58.7	1.1
To DWPF	Canisters	1	0.9	0.18	0.15	<0.01	<0.01	<0.02
	Saltstone, yd³	15	31	11	11	5.8	5.4	2
Limit	Discardable Pu[a], kg	67	129	418	422	797	820	~~2,350~~ 23.5 [f]

(a) Assuming 200,000 gal waste space available at 241-F.

(b) Based on WHC data; Uranium in waste must be ≤ 40 g/*l* to prevent waste header pluggage.

(c) As $Mn(OH)_2$ & $Fe(OH)_3$ in waste.

(d) As $Gd(OH)_3$ in waste.

(e) Assuming 1% overall Pu loss.

(f) Processing of 2350 kg of Pu would be possible before exceeding 200,000 gals of waste production based on an assumed 1% loss.

Table 2

F-Canyon Solution Disposal ~~Comparison~~

Calculation Results

1/4/94

Case		I	II	III	IV	V	VI	VII (PUREX)
	Pu basis, kg	1	1	1	1	1	1	1
Poison	Depleted U, lb	1,000	–	–	–	–	–	10[e]
	Fe + Mn, lb (Fe:Mn:Pu = 30:30:1)	–	235[c]	234	–	–	–	–
	Fe + Mn, lb (Fe:Mn:Pu = 20:30:1)	–	–	–	190	–	–	–
	Gd, lb (Gd:Pu = 5:1)	–	–	–	–	14.7[d]	–	–
	Gd, lb (Gd:Pu = 1.32:1)	–	–	–	–	–	3.9	–
To 241-F	Volume, gal	3,000[b]	1,550	479	474	251	244	85
	Sludge, lb	1,280	1,215	240	195	17.2	8.3	17
	Sludge, *l*	2,490	2,360	465	378	33.4	16	9
	Eq. Pu g/*l* sludge	0.38	0.4	2.0	2.5	28.2	58.7	1.1
To DWPF	Canisters	1	0.9	0.18	0.15	<0.01	<0.01	<0.02
	Saltstone, yd³	15	31	11	11	5.8	5.4	2
Limit	Discardable Pu[a], kg	67	129	418	422	797	820	~~2,350~~ 23.5 [f]

(a) Assuming 200,000 gal waste space available at 241-F.

(b) Based on WHC data; Uranium in waste must be ≤ 40 g/*l* to prevent waste header pluggage.

(c) As $Mn(OH)_2$ & $Fe(OH)_3$ in waste.

(d) As $Gd(OH)_3$ in waste.

(e) Assuming 1% overall Pu loss.

(f) Processing of 2350 kg of Pu would be possible before exceeding 200,000 gals of waste product based on an assumed 1% loss.

last
4 BC last

IV Case Comparisons (cont'd)

Waste generation factors were calculated based on the assumptions made in the individual case definitions. ~~[illegible]~~ Results are shown on Table 2. Figure 2 compares the waste volume generated per kg discarded to waste (~~[illegible]~~ for case 1; per kg processed). Case 1 represents the ~~[illegible]~~ minimum waste disposal case by far. This is the base case for the current waste forecast. ~~Cases 4 and 5 can be~~ The waste generation factors for Cases 4 and 5 are low enough that ~~the plutonium~~ all waste generated could be discarded to the waste tanks in the near future, if these were technically feasible cases. ~~Cases 2 and 3~~ The waste generation factors for Cases 2 and 3 are ~~large~~ small enough that waste tank space could become available in the next few years, if these were technically feasible cases. ~~[illegible]~~

The waste generation factor for case 0 is so large that ~~[illegible]~~ it is not a viable case.

INTER-OFFICE MEMORANDUM
Savannah River Site

Date: 06-Jan-1994 12:04pm EST
From: Douglas M. Blue
BLUE-DM-L4808 AT A1 AT SASRS2
Dept: WMRC
Tel No: 5578088

TO: See Below

Subject: TBP Injection System Environmental Considerations (U)

Per your request, High Level Waste Environmental Compliance provides the following design input/guidance with regards to the secondary containment requirements of the Tributyl phosphate (TBP) injection system chemical supply line.

The TBP injection system chemical supply line, which will protrude from the west side of the 241-96H Stripper Building, does not require secondary containment, i.e. double jacketing. The Federal Facility Agreement (FFA) requires lines which normally contain waste to be provided with secondary containment. Although the TBP injection system ties into a filtrate waste line inside the 241-96H building, the line outside the building is not expected to contain waste and is subsequently not subject to the secondary containment requirement. Moreover, there have been no environmental regulations promulgated which require the line to be drained after use or while in a "stand by" mode.

High Level Waste Environmental Compliance does recommend that the chemical supply line is provided with a dike (secondary containment) around the area where unloading of the TBP takes place. This will mitigate spills, releases to the environment, and is consistent with Best Management Practices.

If you have any questions or comments please call me at 7-8088 or beeper 2651.

Distribution:

TO:	David A. Pervis	(PERVIS-DA-O5645 AT A1 AT SASRS2)
CC:	Steve L. Fullen	(FULLEN-SL-L2093 @A1@SLSRP1)
CC:	DEEPAK BHASIN	(BHASIN-D-Y5397 @A1@SLSRP1)
CC:	Bill Van Pelt	(VANPELT-WB-O7016 AT A1 AT SASRS2)
CC:	CARY B. STEVENS	(STEVENS-CB-O5981 AT A1 AT SASRS2)
CC:	Matthew A. Hunter	(HUNTER-MA-L2335 AT A1 AT SASRS2)
CC:	D T BIGNELL	(BIGNELL-DT-O5579 @A1@SLSRP1)
CC:	Chuck Hayes	(HAYES-CR-Z9722 @A1@SLSRP1)
CC:	S. Scott Hinds	(HINDS-SS-Y5223 AT A1 AT SASRS2)

OSR 3-4A-W (Rev1-89)

WESTINGHOUSE SAVANNAH RIVER COMPANY

INTER-OFFICE MEMORANDUM

ESH-FSS-94-0002

January 4, 1994

TO: D. T. BIGNELL, 719-4A

FROM: W. D. DUNAWAY, 742-5A
(X5-5754)

WDDunaway

DEFENSE WASTE PROCESSING FACILITY (DWPF) AND IN-TANK PRECIPITATION FACILITY (ITP) CHEMICAL RUNS (U)

Ref.: Letter, Dunaway to Richardson, 8/16/93 (attached)

Attached is a copy of the SCDHEC letter concurring with the SRS request to make equipment / processing changes at DWPF and ITP during chemical runs without prior SCDHEC approval. The following changes during chemical runs at ITP and DWPF do not require prior SCDHEC approval, provided the composition of wastestreams or approved methods of disposal are not altered:

- Redirecting flows within ITP
- Redirecting flows within DWPF (approved by 4/30/93 SCDHEC letter)
- Testing alternative chemicals within ITP/DWPF
- Making minor equipment modifications within ITP/DWPF

However, please note the highlighted statement in the attached referenced letter regarding approval authority. Although SCDHEC approval may not be required for some changes, prior written approval from the Environmental Protection Department (EPD) is required for <u>any equipment or processing changes regardless of scope</u>.

As committed to in the referenced letter, prior to radioactive operation, SCDHEC must be provided with any "as-built" changes to drawings that have been previously provided during the permitting process. These will capture modifications during cold runs that will remain permanent.

Please let me (X5-5754) or Chuck Hayes (X5-8838) know if you have any questions.

CRH:pr
Attachment

CC: S. J. Carroll, 742-A
R. K. Cauthen, 704-15S
A. R. Gough, 992-3W
C. R. Hayes, 742-5A
J. V. Odum, 742-A
W. L. Payne, 742-A
J. S. Roberts, 742-A
R. Satterfield, 719-4A
C. B. Stevens, 742-6G
Records Administration, 773-52A
EPD Fileroom, 742-A

South Carolina
DHEC
Department of Health and Environmental Control
2600 Bull Street, Columbia, SC 29201

Commissioner: Douglas E. Bryant

Board: Richard E. Jabbour, DDS, Chairman
Robert J. Stripling, Jr., Vice Chairman
Sandra J. Molander, Secretary

William E. Applegate, III,
John H. Burriss
Tony Graham, Jr., MD
John B. Pate, MD

Promoting Health, Protecting the Environment

October 26, 1993

Mr. W.D. Dunaway, Manager
Permitting Field Support Group
Environmental Protection Department
Westinghouse Savannah River Co.
P.O. Box 616
Aiken, SC 29802

Re: DWPF & ITP Chemical Runs
SRS S-Area
Aiken County

Dear Mr. Dunaway:

Per your April 12, 1993 letter, this office concures that minor alterations within the DWPF and ITP do not require SCDHEC approval provided the alterations do not change the composition of the wastestream(s) or the approved method(s) of disposal. The following are alterations which do not require approval:

1. Redirecting flows within ITP.

2. Testing alternative chemicals within ITP/DWPF provided the chemicals do not become a part of a wastestream which is discharged to the environment

3. Making minor equipment modifications within ITP/DWPF.

If you should have any questions please call.

Sincerely,

Larry E. Arrington
Industrial & Agricultural
Wastewater Division

cc: Lower Savannah EQC

recycled paper

Westinghouse
Savannah River Company

P.O. Box 616
Aiken, SC 29802

ESH-FSS-93-0561

August 16, 1993

Mr. C. W. Richardson, Manager
Federal/Energy/Pretreatment Section
Industrial and Agricultural Wastewater Division
South Carolina Department of Health
and Environmental Control
2600 Bull Street
Columbia, South Carolina 29201

Dear Mr. Richardson:

DEFENSE WASTE PROCESSING FACILITY (DWPF) AND IN-TANK PRECIPITATION FACILITY (ITP) CHEMICAL RUNS (U)

Ref.: Letter, L. E. Arrington to W. D. Dunaway, 4/30/93

The referenced letter gives the SRS flexibility to alter process flow within DWPF during cold chemical runs without prior SCDHEC approval. Some changes may include rerouting flows and storing and transferring tank contents. These changes would not alter wastestream composition or approved methods of disposal. SCDHEC's support of the Site's flexibility need during start-up of DWPF is greatly appreciated.

Some alterations similar and in addition to those mentioned above can be expected during chemical runs at ITP and DWPF. Therefore, the SRS proposes that the following changes during chemical runs at ITP and DWPF do not require prior SCDHEC approval:

- Redirecting flows within ITP
- Testing alternative chemicals within ITP/DWPF
- Making minor equipment modifications within ITP/DWPF

Prior to radioactive operation, we propose providing your office with any "as-built" changes to drawings that have been provided to SCDHEC during the permitting process. These will capture modifications during cold runs that will remain permanent.

* Please be aware that via procedures, the Environmental Protection Department has approval authority for any proposed equipment modifications, process flow changes and wastewater disposals at both ITP and DWPF.

For your information, a schedule outlining the testing schedules for both ITP and DWPF is attached.

This matter was discussed with you and your staff during the SRS / SCDHEC Quarterly Wastewater Meeting on 8/3/93. Thank you in advance for your assistance in this matter. Please let me know (725-5754) if you have any questions.

Yours very truly,

W. D. Dunaway, Manager
Permitting Field Support Group
Environmental Protection Department

CRH:pr
Attachment

CC: M. C. Reece, SCDHEC, Lower Savannah District
C. W. Richardson, SCDHEC-Columbia
A. B. Gould, 703-41A (2)

---------- TOP ----------

INTER-OFFICE MEMORANDUM
Savannah River Site

Date: 03-Jan-1994 03:08pm EST
From: Kester Uzochukwu
UZOCHUKWU-K-L1224 AT A1 AT SAfi
Dept: WMRC
Tel No: 557-0320

TO: See Below

Subject: RE: ADDING CHROMATE COOLING WATER TO HLW TANKS (U)

Please see attached -
The practice of adding chromated cooling water to the HTF tanks is an operating procedure issue, and does not require to be documented on the BMP plan. BMP plan provides guidelines for controlling discharges of significant amounts of toxic and hazardous substances. Item 52, Section 4.7 Rev 1 of WSRC-IM-90-49 (the latest revision to the BMP plan) provides such guidance. Routine addition of chromated cooling water needs to be specifically addressed on the HTF operating procedure/s.

Distribution:

TO:	Jeffry L. Newman	(NEWMAN-JL-L2846 AT A1 AT SLSRP1)
CC:	Matthew A. Hunter	(HUNTER-MA-L2335 @A1@SASRS2)
CC:	Kester Uzochukwu	(UZOCHUKWU-K-L1224 @A1@SASRS2)
CC:	CARY B. STEVENS	(STEVENS-CB-O5981 @A1@SASRS2)
CC:	D T BIGNELL	(BIGNELL-DT-O5579 AT A1 AT SLSRP1)
CC:	Chuck Hayes	(HAYES-CR-Z9722 AT A1 AT SLSRP1)
CC:	Cassandra L. Todaro	(TODARO-CL-L4157 AT A1 AT SLSRP1)

W-0517

INTER-OFFICE MEMORANDUM
Savannah River Site

Date: 15-Dec-1993 09:07am EST
From: Chuck Hayes
HAYES-CR-Z9722
Dept: EPD
Tel No: 7258838

TO: See Below

Subject: ADDING CHROMATE COOLING WATER TO HLW TANKS (U)

The addition of collected chromated cooling water to HLW tanks is acceptable from a wastewater permitting standpoint. The addition is considered a Best Management Practice. You should ensure, however that this practice is covered in the current F/H HLWTF BMP Plan.

Distribution:

TO:	Matthew A. Hunter	(HUNTER-MA-L2335 @A1@SASRS2)
CC:	Jeffry L. Newman	(NEWMAN-JL-L2846)
CC:	CARY B. STEVENS	(STEVENS-CB-O5981 @A1@SASRS2)
CC:	W. DANNY DUNAWAY	(DUNAWAY-WD-O7436)
CC:	Paul C. Carroll	(CARROLL-PC-O6031)
CC:	Bill Payne	(PAYNE-WL-Y7708)

2

INTER-OFFICE MEMORANDUM
Savannah River Site

Date: 15-Dec-1993 08:10am EST
From: Matthew A. Hunter
HUNTER-MA-L2335 AT A1 AT SASRS2
Dept: HLW Env Compl
Tel No: 5570521

TO: Chuck Hayes (HAYES-CR-Z9722 @A1@SLSRP1)

Subject: Chromate H2O Additions

Did you receive this request? I don't remember it. If not, can you issue something on this topic?

By the way, how was earring shopping? Success?

3

INTER-OFFICE MEMORANDUM
Savannah River Site

Date: 06-Dec-1993 11:08am EST
From: Jeffry L. Newman
NEWMAN-JL-L2846 AT A1 AT SLSRP1
Dept: WMER/WMRP-Environmen
Tel No: 5571437

TO: Matthew A. Hunter (HUNTER-MA-L2335 @A1@SASRS2)

CC: CARY B. STEVENS (STEVENS-CB-05981 @A1@SASRS2)

Subject: CHROMATE COOLING H2O ADDITIONS

HAVE YOU HEARD BACK FROM YOUR EPD REQUEST FOR FORMAL STANCE ON CHROMATE COOLING WATER ADDITIONS TO TANKS?? THE DATE I ASKED FOR IT WAS 11/12/93.

THANKS,

J

INTER-OFFICE MEMORANDUM
Savannah River Site

Date: 11-Nov-1993 10:31am EST
From: Chuck Hayes
HAYES-CR-Z9722
Dept: EPD
Tel No: 7258838

TO: See Below

Subject: ITP MODIFICATIONS FOR CHEMICAL SUPPORT SYSTEMS (U)

Per conversation with Larry Arrington of SCDHEC on 11/3/93, no SCDHEC permits or approvals are required to (1) modify the filter cleaning system at ITP by adding an oxalic acid washing step and (2) install a tributyl phosphate injection system on the inlet side of the stripper columns at ITP. It is understood that the scope of the project will be as described in your 11/8/93 IOM.

SCDHEC stated, however, that if these modifications result in changes to the as-built drawings that were provided at the time of the final inspection for the Tank Farms (in 2/93) then revised drawings will have to be submitted to the State.

Also, as a result of adding / modifying these systems, update should be made to the ITP portion of the SRS Best Management Practices (BMP) Plan.

Please contact me when construction is complete to schedule an inspection.

Distribution:

TO:	Douglas M. Blue	(BLUE-DM-L4808 @A1@SASRS2)
CC:	Chris J. Baker	(BAKER-CJ-B4996 @A1@SRXSS2)
CC:	D T BIGNELL	(BIGNELL-DT-O5579)
CC:	Gary L. Cauthen	(CAUTHEN-GL-Y8117 @A1@SRXSS2)
CC:	B.G. Croley	(CROLEY-BG-Y5688)
CC:	W. DANNY DUNAWAY	(DUNAWAY-WD-O7436)
CC:	Eddie R. Ennis	(ENNIS-ER-Y6279 @A1@SASRS0)
CC:	TIMOTHY P. GAUGHAN	(GAUGHAN-TP-O8815 @A1@SASRS2)
CC:	Harvey M. Handfinger	(HANDFINGER-HM-L3128 @A1@SASRS2)
CC:	Matthew A. Hunter	(HUNTER-MA-L2335 @A1@SASRS2)
CC:	Chi L Leung	(LEUNG-CL-O8827 @A1@SASRS2)
CC:	Bill Van Pelt	(VANPELT-WB-O7016 @A1@SASRS2)
CC:	CARY B. STEVENS	(STEVENS-CB-O5981 @A1@SASRS2)
CC:	Donald Thaxton	(THAXTON-GD-O5806 @A1@SASRS2)
CC:	Anthony L. Towns	(TOWNS-AL-A9389)

2

INTER-OFFICE MEMORANDUM
Savannah River Site

Date: 08-Nov-1993 10:37am EST
From: Douglas M. Blue
BLUE-DM-L4808 AT A1 AT SASRS2
Dept: WMRC
Tel No: 7-8088 pager 2651

SPOKE WITH LARRY 11/3

TO: See Below

Subject: Wastewater Permit Modifications for ITP (U)

Per our discussion on Wednesday, November 4, 1993, High Level Waste Environmental Compliance (HLWEC) requests that the Environmental Protection Department (EPD) notify the South Carolina Department of Health and Environmental Control (SCDHEC) regarding the In-Tank Precipitation's (1) modification to the chemical cleaning system and (2) construction of a Tributyl Phosphate injection system. Both systems are to be installed at the In-Tank Precipitation Facility (ITP) before radioactive start-up. Although HLWEC anticipates that no permit modifications will be required, ITP would like to ensure that DHEC concurs with this position and requires no project specific data to be submitted. As you are aware both projects are in their infancy stages and are subject to change. Nevertheless, a brief description of the projects is listed below for your information.

The chemical cleaning system will utilize the existing temporary feed tank to supply Oxalic Acid (OA) to the filters for cleaning. A Tee will be put in the precipitate feed line with double valving allowing for additions of OA to the system. Because of the high level of radiation in the precipitate line, the Tee and associated piping which normally contain waste will have a double jacket and shielding.

Additionally, the Tributyl Phosphate (TBP) injection system is required for the control of foaming and resulting dP in the stripper columns. Approximately 1 to 1.5 liters/hr of Tributyl Phosphate will be added to the filtrate line on the inlet side of the stripper columns. The system will have a storage tank approximately 100-150 gallons for the storage of the TBP. The exact location of the TBP storage tank and system has yet to be determined.

Please let me know the outcome of the communication with DHEC and any actions required of ITP. If you have any questions, please contact me at 7-8088 or pager 2651. Thanks.

Distribution:

TO:	Chuck Hayes	(HAYES-CR-Z9722 @A1@SLSRP1)
CC:	Harvey M. Handfinger	(HANDFINGER-HM-L3128 AT A1 AT SASRS2)
CC:	B.G. Croley	(CROLEY-BG-Y5688 @A1@SLSRP1)
CC:	Chris J. Baker	(BAKER-CJ-B4996 @A1@SRXSS2)
CC:	Eddie R. Ennis	(ENNIS-ER-Y6279 @A1@SRXSS2)
CC:	Bill Van Pelt	(VANPELT-WB-O7016 AT A1 AT SASRS2)
CC:	Gary L. Cauthen	(CAUTHEN-GL-Y8117 @A1@SRXSS2)
CC:	Donald Thaxton	(THAXTON-GD-O5806 AT A1 AT SASRS2)

3

CC:	Chi L Leung	(LEUNG-CL-O8827 AT A1 AT SASRS2)
CC:	TIMOTHY P. GAUGHAN	(GAUGHAN-TP-O8815 AT A1 AT SASRS2)
CC:	Matthew A. Hunter	(HUNTER-MA-L2335 AT A1 AT SASRS2)
CC:	D T BIGNELL	(BIGNELL-DT-O5579 @A1@SLSRP1)
CC:	CARY B. STEVENS	(STEVENS-CB-O5981 AT A1 AT SASRS2)

INTER-OFFICE MEMORANDUM
Savannah River Site

Date: 08-Nov-1993 01:48pm EST
From: Matthew A. Hunter
HUNTER-MA-L2335 AT A1 AT SASRS2
Dept: HLW Env Compl
Tel No: 557-0521 bpr# 2801

TO: Chuck Hayes (HAYES-CR-Z9722 @A1@SLSRP1)

Subject: Chromate in the Tank Farms

Chcuk,

I need a memory refresher. How did we address this question? I'm having trouble remembering the standard line that we used.

REITERATED TO MAH, THE BMP POSITION. (I.E. WE SHOULD TREAT Cr WATER JUST LIKE SPILLS FROM SWTP CHEMICAL FEED BUILDINGS (WHICH ARE HARD PIPED TO THE SWTPs)).

CDH
11/11

2

INTER-OFFICE MEMORANDUM
Savannah River Site

Date: 08-Nov-1993 12:31pm EST
From: Jeffry L. Newman
NEWMAN-JL-L2846 AT A1 AT SLSRP1
Dept: WMER/WMRP-Environmen
Tel No: 5571437

TO: Michael J. Hagenbarth (HAGENBARTH-MJ-L2326 @A1@SASRS2)
TO: Matthew A. Hunter (HUNTER-MA-L2335 @A1@SASRS2)

CC: CARY B. STEVENS (STEVENS-CB-O5981 @A1@SASRS2)
CC: D T BIGNELL (BIGNELL-DT-O5579 AT A1 AT SLSRP1)

Subject: ADDING Cr COOLING H2O TO TANK 43

Matt/Mike,

Ref.: "THE F/H AREA TANK FARM WASTE WATER PERMIT #17,424-1W, SPECIAL CONDITION #4", dated 10/20/93

In the above referenced IOM RS Murphy outlined the process chemicals listed in the referenced permit. Chromated cooling water was not on the list. This sparked Karen Lesko's interest because as she states "we regularly, by procedure, add chromated cooling water to Tank 43". This would occur as a result of a spill.

Matt and I have discussed this situation. I'm still not comfortable with the answers (at least not comfortable enough to go back to Karen). Please get me some documentation (reg, letter, etc.) on this situation so I can explain it to anyone who asks.

By the way, the distribution list on this IOM was impressive (Wright, Monahon, French, etc.).

jn

W-0517

INTER-OFFICE MEMORANDUM
Savannah River Site

WER-HLE-931182

September 24, 1993

TO: James N. Brooke (241-120H)

FROM: Douglas Blue (742-6G) DB

ITP Filtrate Line Inspection Requirements (U)

Introduction

Per your request, please find below a recommendation from High Level Waste Environmental Compliance (HLWEC) on inspection alternatives for the ITP Filtrate Lines. Upon concurrence by ITP Engineering and ITP Operations, HLWEC will propose the following plan to the South Carolina Department of Health and Environmental Control (SCDHEC). Also included is the regulatory background and summary of the inspection difficulties associated with the lines.

Background

On August 16, 1993, the Department of Energy (DOE) was notified by the Environmental Protection Agency (EPA) that the Federal Facility Agreement (FFA) was effective. The FFA is a tri-party agreement between the DOE, Environmental Protection Agency (EPA), and SCDHEC. The FFA provides for the integration of the Resource Conservation and Recovery Act (RCRA), and the Comprehensive Environmental Response, Compensation, and Liability Act (CERCLA) and for the environmental restoration of hazardous waste sites. Section IX of the FFA requires DOE to prepare and submit an Industrial Wastewater As-Built Construction Permit Application for the F and H-Area HLW Tank Farms and a report assessing the secondary containment of the waste tank systems. In anticipation of the signing and commitments of the FFA, the Industrial Wastewater Permit Application was prepared in accordance with the SCDHEC wastewater permit program and was submitted to the State on July 17, 1991. The Tank Assessment Report specific to the In-Tank Precipitation Facility (ITP) was also submitted at this time. The Wastewater permit to operate was received on March 3, 1993.

The FFA, in conjunction with the Wastewater Permit, provides greater operating flexibility than the RCRA Part A interim status permit which previously governed the waste tank systems. Unlike RCRA, the regulation's

under which the Wastewater Permit was issued does not require equipment to have full secondary containment. The EPA and DHEC, however, included secondary containment requirements in the FFA for new tank systems, new and modified equipment, and equipment regularly utilized in the waste removal process. The FFA was also drafted to provide a means for removing waste from equipment without secondary containment. Equipment lacking secondary containment must either be provided with secondary containment or have sufficient administrative and engineering controls to minimize potential releases to the environment. A description of these controls are documented in the Tank Assessment Reports.

Discussion

The ITP filtrate lines referenced in the Tank Assessment report do not meet the secondary containment criteria. The filtrate lines are not double-walled or jacketed and are above ground and embedded within a concrete wall. In an effort to avoid a State mandated modification to the lines, SRS proposed in the Tank Assessment Report (p. 59) to hydrostatically test the lines once every ITP operation cycle (e.g. each processing batch - approximately every 3-4 months). The frequency of testing equates to approximately 3 inspections per year. ITP is required to perform the filtrate line inspections after radiological operations commence. A test should be conducted before start-up to verify the integrity of the lines. Additionally, a daily radiologic survey of the outer surface of the filter cell concrete wall is planned.

It has been determined that the frequency of the hydrostatic test is not practical since the test would require the removal of the filter cell cover at a frequency which would increase the risk of contamination to the environment and increase the potential of employee exposure. ITP engineering has requested that High Level Waste Environmental Compliance offer guidance and pursue any potential relief from the inspection frequency.

Recommendation

HLWEC has discussed relief options with the Environmental Protection Department (EPD) and HLW engineering. HLWEC recommends that a yearly hydrostatic test, based on the completion of 3 batch cycles with periods between tests not to exceed 18 months be proposed to the State. This recommendation is based upon past EPD negotiations with the State and is consistent with the yearly status reporting requirements of the FFA. The radiologic surveys as outlined in the Tank Assessment Report will also be conducted. Although diminishing the frequency of inspections, HLWEC feels that this program is consistent with ALARA practices and has a high probability of approval with the regulatory agency. Additionally, HLWEC recommends investigating inspection/modification alternatives for the lines (e.g. non-destructive line assessments, re-design, etc.) prior to hot operations; changes to the system before start-up will avoid problems associated with plant modifications in a radiological environment.

Additionally, HLWEC understands the following is under investigation:

1. Evaluation of the corrosion data for the filtrate lines.

2. Investigate the use of a coupon program so that actual corrosion data can be collected.

3. Investigate alternative programs which would allow for more frequent testing of the lines and/or different methods to test the lines. (i.e. Non-destructive testing techniques)

4. Investigate alternative piping (with secondary containment) which would eliminate the laborious inspection requirements all together.

Please note that State approval may be contingent upon the availability of the above data. Although unlikely, it should be noted that revisiting the inspection program may draw unnecessary attention and scrutiny from the State. As a result, the State may strictly enforce the once per cycle testing/inspection requirements. If you have any questions or comments please contact Douglas Blue at 7-0520 or beeper 2651.

CC: G.T. Wright, 703-H
H.M. Handfinger, 5002-H
T.M. Monahon, 703-H
V.G. Dickert, 703-H
B.G. Croley, 241-120H
E.R. Ennis, 5002-H
G.D. Thaxton, 241-119H
W.B. VanPelt, 241-152H
T.L. Ortner, 241-152H
W.D. Dunaway, 742-5A
C.B. Stevens, 742-6G
T.P. Gaughan, 241-152H
D.T. Bignell, 742-6G
J.A. Pike, 703-H
~~G.D. Hayes, 742-5A~~
G.L. Cauthen, 241-119H
R.M. Satterfield, 719-4A

W-0517

Westinghouse
Savannah River Company

P.O. Box 616
Aiken, SC 29802

ESH-FSS-93-0585

September 14, 1993

Mr. C. W. Richardson, Manager
Federal/Energy/Pretreatment Section
Industrial and Agricultural Wastewater Division
South Carolina Department of Health
and Environmental Control
2600 Bull Street
Columbia, South Carolina 29201

Dear Mr. Richardson:

242-16F HIGH LEVEL WASTE EVAPORATOR HIGH HEAT WASTE PROCESSING PLAN (U)

Please find attached for your information a copy of the 242-16F Evaporator High Heat Waste Processing Plan Overview. In an effort to maximize the available waste tank storage space in the F-Area Tank Farm, Evaporator 242-16F will begin processing high heat waste supernate. This change is needed to support F-Area Canyon operations and to serve as a contingency to process DWPF recycle wastewater. Historically, the 16F Evaporator has processed only low heat waste. The 16F Evaporator is expected to be available for high heat waste processing in early 1994.

The SRS feels that the design and installation of equipment to support the 16F Evaporator mission change falls under the "normal operations" category in the F/H Tank Farms wastewater permit application and, thus does not require a permit modification. Also, the secondary containment assessment provided with the aforementioned permit application is not affected by this change.

This matter has been discussed with Larry Arrington. Please contact C. R. Hayes (725-8838) if there are any questions.

Yours very truly,

W. D. Dunaway, Manager
Permitting Field Support Group
Environmental Protection Department

CRH:pr
Attachment

CC: w/ attachment
M. C. Reece, SCDHEC, Lower Savannah District
L. E. Arrington, SCDHEC, Columbia
A. B. Gould, 703-47A (2)

W-0517

BCC:

D. T. Bignell, 719-4A
D. M. Blue, 742-6G
J. E. Bolen, 703-47A *
L. S. Coward, 742-5A *
H. L. Davis, 703-47A *
A. R. Gough, 992-3W *
C. R. Hayes, 742-5A
M. A. Hunter, 742-6G
B. L. Lewis, 703-H
T. M. Monahon, 703-H
J. V. Odum, 742-A
W. L. Payne, 742-A
R. L. Peterson, 703-47A
C. B. Stevens, 742-6G
K. Z. Wolf, 704-15S
Records Administration, 773-52A *
EPD Fileroom, 742-A *

* - w/attachment

3

UNCLASSIFIED

WER-CMD-93-1007
Revision 2

SAVANNAH RIVER SITE

2F EVAPORATOR HIGH HEAT WASTE PROCESSING PLAN OVERVIEW (U)

Prepared by: J. E. Griffiths
Date: July 22, 1993

Westinghouse Savannah River Company
Savannah River Site
Aiken, SC 29808

PREPARED FOR THE U. S. DEPARTMENT OF ENERGY UNDER CONTRACT NO. DE-AC09-88SR18035

UNCLASSIFIED

TABLE OF CONTENTS

	Page
1.0 OBJECTIVE	1
2.0 DRIVERS	1
3.0 PROPOSAL	1

Objective: To maximize the available waste tank storage space in the F-Area Tank Farm by processing dilute high heat waste supernate in Tank 33 and 34 in the 242-16F Evaporator to support F-Area Canyon operations and to serve as a contingency to process DWPF recycle.

Drivers:

1. *Lack of dilute LHW feed:* Presently, the 2F Evaporator system (includes Tanks 25, 27, 28, 44, 45, and 47) is essentially full of salt and high specific gravity waste (> 1.5)

2. *Backlog of unconcentrated HHW supernate:* Approximately 6 million gallons of HHW supernate is ready to be processed in both the F and H Area Tank Farms. Roughly 2 million gallons of HHW supernate is available in Tanks 33 and 34.

3. *Delays in 1H Evaporator Restart to process the HHW backlog:* Startup of the 1H Evaporator has been delayed to address some environmental (FFA) and technical (criticality) issues.

4. *Need to maximize tank space available prior to DWPF startup to compensate for unforeseen delays in RHLWE startup.*

5. *If the HHW Processing Plan is not implemented:* F-Area Tank Farm will not have the space required to support continued F-Area Canyon operations and will not be available to aid H-Area Tank Farm in dealing with DWPF recycle stream.

Proposal: Activities for the HHW Processing Plan can be broken into four areas. They are:

1. Transfer high specific gravity waste from Tank 26.
2. Prepare the 242-16F Evaporator to process HHW supernate.
3. Prepare Tank 46 to serve as a concentrate receipt tank.
4. Maintain emergency spare capacity.

1. Transfer high specific gravity waste from Tank 26.

The 2F Evaporator system contains approximately 2.4 million gallons of high specific gravity supernate. Roughly 750,000 gallons is stored in Tank 26. To maximize evaporator operation during HHW processing, a significant portion of the high specific gravity waste currently stored in Tank 26 must be removed and stored elsewhere in the 2F Evaporator system. The available tanks to accept this waste are Tanks 25, 27, 28, 44 and 45. Tank 47 is to be used as the vent tank and therefore cannot accept the waste from Tank 26. The possibility of transferring some of this waste to Tanks 5, 6, and 8 was eliminated because of SCDHEC decision (per our request) to only allow transfer of waste to Type I tanks in emergency situations.

Prior to the beginning of HHW Processing, supernate will be transferred from Tank 26 to Tanks 25, 27, 28, 44, 45, and 46. Approximately, 12 inches (42,120 gallons) will be added to Tank 46 to provide a buffer layer between the tank bottom and the hot evaporator concentrate. This will also allow the concentrate to be cooled immediately since cooling coils are located approximately one foot from the tank bottom. Transfers to Tank 28, 44, and 45 will be completed by operating the evaporator and utilizing existing operating procedures. Because the secondary containment for the transfer lines from FBD-4 to Tank 28 and 44 are not pressure testable at this time, transferring waste to these tanks via the evaporator is the only possible means to complete these transfers. Tank 45 will be filled in this manner because it is the current concentrate receipt tank for the 242-16F Evaporator.

In order to complete the transfers from Tank 26 to Tanks 25, 27, and 46, two temporary jumpers will be fabricated and installed in FDB-4. The transfer route will be as follows:

Tk 26 jet --> FDB-4; Noz. 13 --> FDB-4; Noz. 2 --> FPT-3 --> FDB-4; Noz. 3 --> FDB-4; Noz. 16D --> FDB-4; Noz. 16 (to Tk 25) or Noz. 11 (to Tk 27) or Noz. 18 (to Tk 46)

See sketch 1 for the FDB-4 jumper configuration during these transfers. Once the transfer are complete, the temporary jumpers will be removed and the previous jumper configuration installed (see sketch 2).

2. Prepare the 2F Evaporator to process HHW supernate.

Several technical issues regarding the processing of HHW supernate in the 2F Evaporator have been addressed. These issues include criticality, shielding requirements and age of the waste to be processed. Initial evaluations (TR# SR-92-362, Rev 1) show that criticality is not a problem for processing F-Area HHW supernate. A recent study on this issue has stated that " no evidence that criticality in the SRS Evaporator Systems due to accumulation of uranium and plutonium in the feed and concentration tanks and in the evaporator itself could occur" (Reference 3). Health Protection Engineering has evaluated chemistry data from Tanks 33 and 34 and has determined that no additional shielding requirements are necessary to process HHW in the 2F Evaporator. The Safety Analysis Report (Reference 1) for the waste tank farms states that HHW will be aged for one year prior to being processed in the evaporator. The age of the waste to be processed by this plan has been determined to be over 4 years. More information on these issues can be found in Technical Review # SR-92-362, Revision 1.

Along with the technical issues mentioned above, the following field activities must also be completed before HHW Processing can begin.

A. *Design and fabrication of a new south lift jumper for the 2F Evaporator.* Several years ago, the evaporator lift jumper design was modified to include a separator pot which would increase the capacity of the evaporator lift. This "new" design is used on the north lift in the 2F Evaporator and for all lift jumpers in the 1H and 2H Evaporators. This design has been in use for

several years and is now considered the standard design for lift jumpers. This activity will bring the south lift in agreement with this philosophy.

B. *Replacement of the Tank 27 Cesium Removal Column:* The CRC presently installed in Tank 27 has a ruptured screen which has rendered the CRC inoperable. The CRC was bypassed at the time of the failure (approximately 1988) because the radioactivity in the overheads was well below the ETF release limits (2500 d/m/ml) to the ETF. While the overheads activity is not anticipated to exceed ETF limits during HHW Processing, the Tank 27 CRC will be replaced as a precautionary measure. When the CRC was bypassed, some flush water piping was removed to ensure adequate insolation. Therefore, this piping is being replaced according to existing design requirements.

C. *Repair of the Tank 47 GDL-COP Drain line penetration:* Several months ago, water was discovered in the Tank 47 annulus when an annulus conductivity probe alarm was received. Samples of the water were taken and were found to be within clean limits which would negate the possibility of a tank leak. Photographic inspection of the annular space revealed a water mark on the annulus wall just below the penetration of the Tank 47 Gravity Drain line - Cleanout Port (GDL-COP) drain line. It was determined that the penetration had failed and was allowing ground water to seep into the annulus. A work request was initiated to repair the penetration so that Tank 47 can be used as the 2F Evaporator Vent tank when HHW Processing commences. This activity is considered a maintenance item.

3. Prepare Tank 46 to receive evaporator concentrate.

In order to ensure that Tank 46 would be ready to receive evaporator concentrate the following items must be addressed and/or completed.

Technical Issues

A. *Resolve bottom deposit issue.* During a photographic inspection of the tank interior in April 1992, a rust-like deposit was observed over approximately 30% of tank bottom. After sampling the deposit and further photographic inspection, it was determined by the Savannah River Technology Center (SRTC) that the deposit was caused by a one time incursion of water in the tank. SRTC also determined that this deposit did not adversely affect the tank's structural integrity (Reference 2). This issue is considered to be complete.

B. *Verify tank monitoring equipment is operational.* This equipment includes radiation monitors, the heating and ventilation systems, leak detection equipment, and hydrogen monitors. Because Tank 46 was designated the emergency spare storage tank for F-Area, it has been maintained in a standby mode. This means that the equipment referenced above has been maintained as if the tank were actually operating. Periodic maintenance activities are performed to ensure operability of this equipment.

Field Items

A. *Install Model 185 Reel Tape.* The existing reel tape on Tank 46 is obsolete. A program to replace all reel tapes on WM waste storage tanks has been initiated. Because of the recent mission change for F-Area Tank Farm, the Tank 46 installation had been moved up on the priority list to meet the HHW Processing Plan schedule. The new reel tape design is very similar to the old design with the exception of digital readouts versus analog as on the older versions.

B. *Design, fabricate and install transfer jet.* Technical Standard DPSTS 241-1.01, C2 & 3 requires that a tank jet or pump (minimum capacity of 75 gpm) and associated piping be available and ready for use within 24 hours to transfer waste from a leaking tank. Installation of the transfer jet in Tank 46 will allow Waste Management to meet this requirement when waste is added to the tank.

C. *Design, fabricate and install containment curb and hut at Tank 46 GDL riser (C3).* Because of previous incidents involving a riser overflow, the installation of a containment curb and hut has become a standard practice within WM to ensure adequate containment in the event a riser should overflow in the future.

D. *Repair and install GDL-BFV assembly in Tank 46.* A backflush valve assembly must be installed, in order for Tank 46 to operate as a concentrate receipt tank. This assembly is a standard feature on concentrate receipt tanks in the 2F and 2H Evaporator systems.

4. Maintain emergency spare capacity.

Emergency spare capacity must be maintained such that the cumulative available space in each Type III and IIIA tank exceeds the 1.3 million gallons requirement. Tickler 138-9-FH-201Q, "F and H Tank Farm Available Space (U)" will be revised to record all available space in F Tank Farm on a monthly basis to ensure adequate emergency spare space is maintained. Presently, H Tank Farm maintains it's emergency spare space in the manner described above. Attachment 1 shows the estimated available space in Tanks 33, 34, 46 and 47 once HHW Processing Begins.

References:

1. DPSTSA-200-10, Sup-18, "Safety Analysis - 200 Area liquid Radioactive Waste Handling Facilities (U)", August 1988.

2. SRT-MTS-92-3040, P. E. Zapp to B. L. Lewis, "Characterization of Tank 46 Floor Particles (U)", June 25, 1992.

3. WSRC-TR-93-081, "Evaluation of Potential Accumulation of Uranium and/or Plutonium in the HLW Evaporator Systems (U), G. K. Georgeton & M. C. Chandler, February 1, 1993.

Sketch 1

138-8-F-512

DIVERSION BOX FDB-4 (U)

FDB-4 Configuration for HHW Processing Plan (Transfers from Tk 26 to New Hill Tanks)

Revision 9
Approval Date 7/23/91
Category 3
Manual SW1.10
WMO
Page 1 OF 1

*This is a Complete Revision

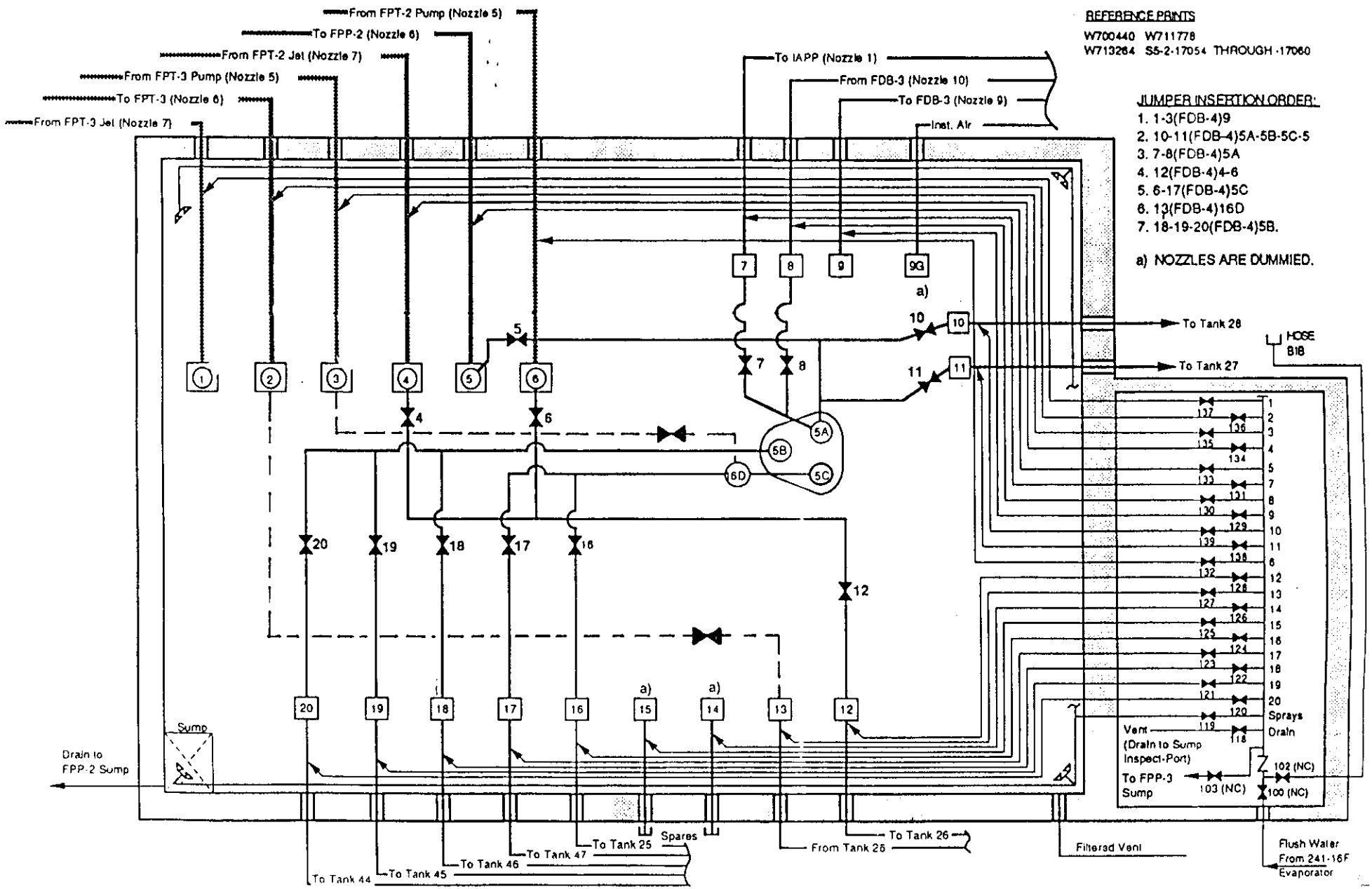

Sketch 2

138-8-F-512

DIVERSION BOX FDB-4 (U)

FDB-4 Normal Configuration

Revision 9
Approval Date 7/23/91
Category 3
Manual SW1.10
WMO
Page 1 OF 1

*This is a Complete Revision

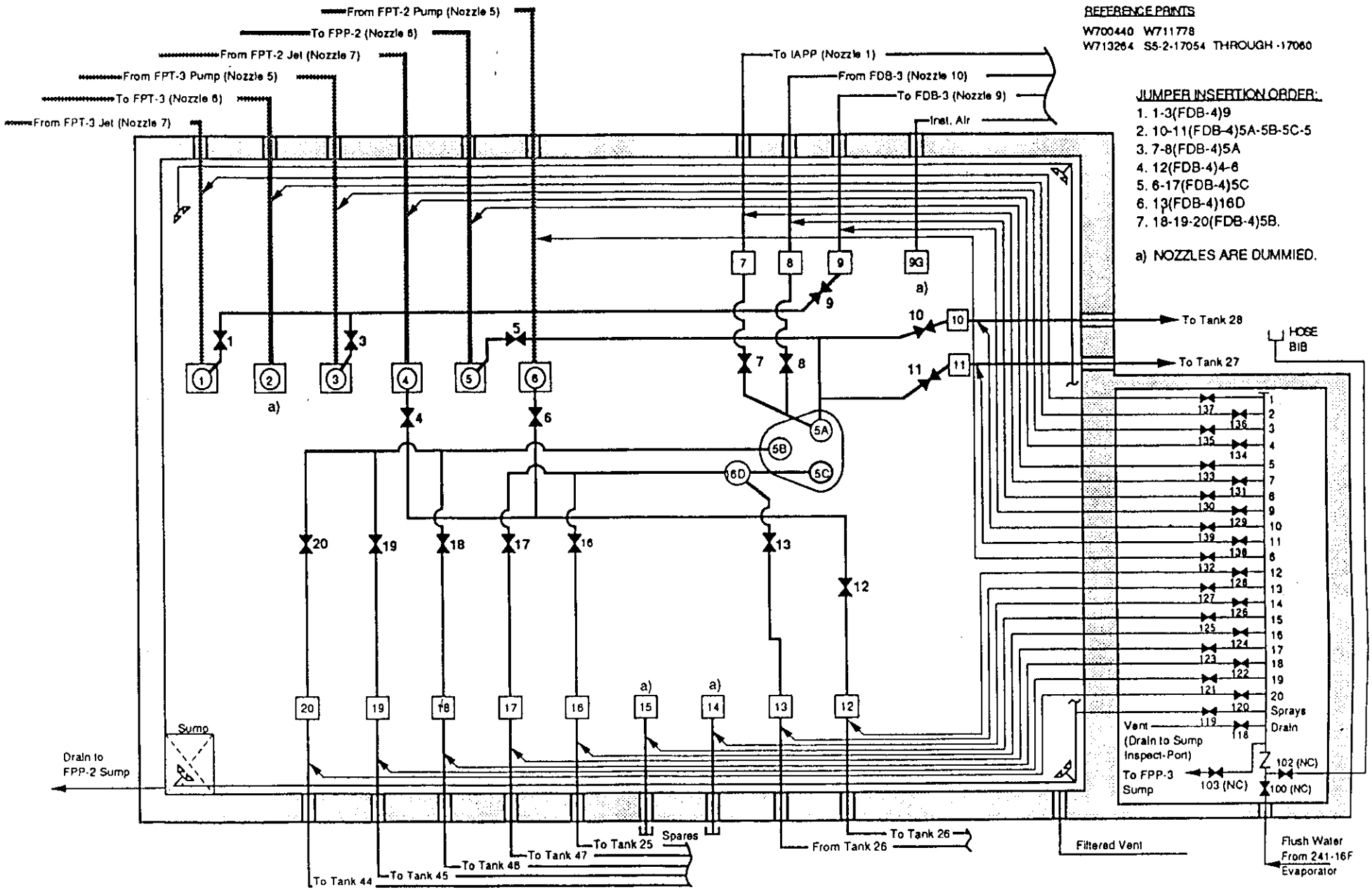

2F Evaporator HHW Conversion Plan
Proccessing Strategy

Evaporator Operation
(estimated time to process and space reclaimed)

Assumptions:

1. *A volume reduction factor= 1.19 (Total Feed/Net Concentrate)
   *(From 1991 Yearly Data Record)
2. Maximum space available for a transfer in Tk 26 = 473,850 gallons
3. A heel of 5 feet in Tank 46 = 210,600 gallons
4. Tank 26 Level can be lowered to 215 inches.
5. "Maximum LL in Tank 46 " includes tank heel.
6. "Days to Process" does not include downtime due to scheduled outages, desalt/descale operations, equipment failures, etc. Anticipated Utility is roughly 90%.
7. Evaporator is fed at a rate of 15 gpm (21,600 gallons/day).

Tank Data

	Tank 26*	Tank 33	Tank 34
Level, inches	298.5	346.2	352.2
Jet/Feed Pump Elevation,	215	145	100
Available Feed, in	83.5	201.2	252.2
Available Feed, gallons	293,085	706,212	885,222

* *Includes required heel for proper feed pump operation.*

Attachment 1

Processing Tanks 34 first, then Tank 33 without transfer of HHW supernate to Tank 46.

Transfer	Gallons to T26	Feed remaining in T34, gal	Total Feed, gallons	Net Conc to T46, gallons	Days to Process	Max LL in T46, inches	Available Space gallons	Space Gain, gallons
1	180,765	704,457	473,850	398,193	22	113	1,308,018	75,657
2	473,850	230,607	473,850	398,193	22	227	1,383,674	75,657
3	230,607	0	230,607	193,787	11	282	1,420,494	36,820
4R	473,850		473,850	398,193	22	261	1,496,151	75,657
5R	473,850		473,850	398,193	22	239	1,571,807	75,657
6R	473,850		473,850	398,193	22	217	1,647,464	75,657
7R	473,850		473,850	398,193	22	196	2,429,333	75,657
8R	473,850		473,850	398,193	22	174	2,307,728	75,657
								566,419

** 'R' denotes recycle from Tank 46 back to Tank 26.

Transfer	Gallons to T26	Feed remaining in T33, gal	Total Feed, gallons	Net Conc to T46, gallons	Days to Process	Max LL in T46, inches	Available Space gallons	Space Gain, Gallons
1	473,850	232,362	473,850	398,193	22	288	2,615,746	75,657
2	232,362	0	232,362	195,262	11	343	2,420,484	37,100
3R	473,850		473,850	398,193	22	322	2,496,141	75,657
4R	473,850		473,850	398,193	22	300	2,571,798	75,657
5R	473,850		473,850	398,193	22	279	2,647,454	75,657
								339,728

Total Time to process = 263 days
8.76 months
0.72 years

Total Space Gain= 906,147

Westinghouse
Savannah River Company

P.O. Box 616
Aiken, SC 29802

ESH-FSS-93-0561

August 16, 1993

Mr. C. W. Richardson, Manager
Federal/Energy/Pretreatment Section
Industrial and Agricultural Wastewater Division
South Carolina Department of Health
and Environmental Control
2600 Bull Street
Columbia, South Carolina 29201

Dear Mr. Richardson:

DEFENSE WASTE PROCESSING FACILITY (DWPF) AND IN-TANK PRECIPITATION FACILITY (ITP) CHEMICAL RUNS (U)

Ref.: Letter, L. E. Arrington to W. D. Dunaway, 4/30/93

The referenced letter gives the SRS flexibility to alter process flow within DWPF during cold chemical runs without prior SCDHEC approval. Some changes may include rerouting flows and storing and transferring tank contents. These changes would not alter wastestream composition or approved methods of disposal. SCDHEC's support of the Site's flexibility need during start-up of DWPF is greatly appreciated.

Some alterations similar and in addition to those mentioned above can be expected during chemical runs at ITP and DWPF. Therefore, the SRS proposes that the following changes during chemical runs at ITP and DWPF do not require prior SCDHEC approval:

- Redirecting flows within ITP
- Testing alternative chemicals within ITP/DWPF
- Making minor equipment modifications within ITP/DWPF

Prior to radioactive operation, we propose providing your office with any "as-built" changes to drawings that have been provided to SCDHEC during the permitting process. These will capture modifications during cold runs that will remain permanent.

Please be aware that via procedures, the Environmental Protection Department has approval authority for any proposed equipment modifications, process flow changes and wastewater disposals at both ITP and DWPF.

For your information, a schedule outlining the testing schedules for both ITP and DWPF is attached.

This matter was discussed with you and your staff during the SRS / SCDHEC Quarterly Wastewater Meeting on 8/3/93. Thank you in advance for your assistance in this matter. Please let me know (725-5754) if you have any questions.

Yours very truly,

W. D. Dunaway, Manager
Permitting Field Support Group
Environmental Protection Department

CRH:pr
Attachment

CC: M. C. Reece, SCDHEC, Lower Savannah District
C. W. Richardson, SCDHEC-Columbia
A. B. Gould, 703-41A (2)

Attachment A

DWPF STARTUP TESTING SCHEDULE

EVENT	DATE
Cold Chemical Runs Commencement	3/8/93
Melter and Waste Qualification Runs	4/94 - 2/95
Commencement of Mercury Testing	6/95
Radioactive Startup	12/95

ITP STARTUP TESTING SCHEDULE

EVENT	DATE
Commencement of Simulant Testing	9/92
Commencement of Benzene Testing	5/93
Radioactive Startup	1Q/94

W-0517
W-0468

3

BCC:
J. E. Bolen, 703-47A
D. T. Bignell, 719-4A
L. S. Coward, 703-18A
B. R. Damani, 704-15S
H. L. Davis, 703-47A
C. R. Hayes, 703-18A
M. A. Hunter, 742-6G
J. L. Keyes, 742-A
J. V. Odum, 742-A
J. F. Ortaldo, 704-S
W. L. Payne, 742-A
J. S. Roberts, 742-A
R. Satterfield, 719-4A
C. B. Stevens, 742-6G
A. L. Towns, 704-S
K. Uzochukwu, 742-6G
K. Z. Wolf, 704-15S
Records Administration, 773-52A
EPD Fileroom, 742-A

W-0517 1

INTER-OFFICE MEMORANDUM
Savannah River Site

Date: 19-Jul-1993 09:40am EDT
From: Bill Payne
PAYNE-WL-Y7708
Dept: EPD/ESH&QA
Tel No: 59002

TO: See Below

Subject: ITP RAINWATER DISPOSAL (U)

Your draft memo looks good with a couple of exceptions.

(1) The two week turn-around time to get DHEC approval may not be realistic.

(2) According to the most recent conversations Randy Weigel has had with SCDHEC, you may discharge benzene directly to the ground if it is below the drinking water standard of 5 ppb, but it may not enter surface waters without prior SCDHEC approval. We recommend you change your guidance to reflect this requirement.

Per our phone conversation this morning, and the discussions some of us had on Friday, the path forward appears to be...

(1) Resolve the concerns Chuck Hayes mentioned relative to discharges to stormwater basins creating a "potential" need to permit the basins.

(2) After (1) is resolved, Randy Weigel will approach SCDHEC verbally to get a reading regarding what concentration of benzene is permissible for discharge to the retention basin and/or other outfalls around ITP.

(3) Depending on how (2) is answered, a written request may be forwarded to SCDHEC to discharge benzene as you have proposed.

Call me if you need any clarification about the information contained in this All-In-1.

Distribution:

TO:	Douglas M. Blue	(BLUE-DM-L4808 @A1@SASRS2)
CC:	Thomas A. Syfert	(SYFERT-TA-L5282 @A1@SASRS2)
CC:	Chuck Hayes	(HAYES-CR-Z9722)
CC:	Randall W. Weigel	(WEIGEL-RW-Y8299)
CC:	JOHN L. KEYES	(KEYES-JL-O8263)
CC:	W. DANNY DUNAWAY	(DUNAWAY-WD-O7436)
CC:	Kim S. Wierzbicki	(WIERZBICKI-KS-O6535 @A1@SASRS2

OSR 3-4A-W (Rev 1-89)

2

WESTINGHOUSE SAVANNAH RIVER COMPANY

INTER-OFFICE MEMORANDUM

WER-HLE-930999

July 16, 1993

To: G. D. Thaxton, 241-119H

From: K. S. Wierzbicki, 742-6G KSW

Disposal of ITP Secondary Containment Rain Water (Rev.2) (U)

Ref.: (1) K. S. Wierzbicki to G. D. Thaxton, "Disposal of Secondary Containment Rain Water," October 12, 1992.

(2) J. L. Keys to L. E. Arrington, "Savannah River Site Request to Include Sodium Tetraphenylborate and Benzene in Wastewater Discharge at NPDES H-016 Outfall (U)," June 21, 1993.

(3) L. E. Arrington to J. L. Keys, "Sodium Tetraphenylborate & Benzene Discharge SRS F/H-Area Outfall H-16," July 1, 1993.

(4) WSRC-TR-93-031, "Hazards Assessment Document: Effluent Treatment Facility"

High Level Waste Environmental Compliance (HLWEC) provides the following guidance for the disposition of storm water containing benzene and sodium tetraphenylborate (STPB). This guidance supersedes all previous issued discharge parameters (Ref. 1), and should be applied where process knowledge indicates that benzene/STPB may be present in storm water collected in secondary containment, e.g. test facility dike. Releases to the basin/outfall should consider the total benzene that could be released after degradation of STPB. It is HLWEC understanding that ITP engineering is in the process of determining the total benzene which could potentially be released from STPB. Storm water discharge limits for the ITP should be revised as follows:

Water ≤ 0.005 ppm

1. Water containing ≤ 0.005 ppm total benzene (free benzene + potential benzene liberated from STPB) can be discharged to the outfall directly. The ≤ 0.005 ppm limit is consistent with acceptable parameters set forth in the South Carolina Water Quality Criteria, R.61-68. Constituents discharged to a NPDES permitted outfall (H-007) must be below Water Quality Standards unless higher discharge parameters are approved by the State on the NPDES permit. Benzene is not approved for elevated discharge limits.

3

Water >0.005 ppm and <0.5 ppm

2. Site NPDES permit # SC 0000175, Part II.B.8.a.1 requires the State to be notified as soon as a facility has reason to believe that an activity has occurred or will occur which will result in the discharge into an outfall of greater than 0.1 ppm of any toxic pollutant - benzene is such a pollutant. As such, the H-017 NPDES permit which accepts discharge from the 8H retention basin, is currently being modified to include benzene as "Believed Present." Contingent upon SCDHEC approval, water containing >0.005 ppm and <0.5 ppm total benzene (free benzene + potential benzene liberated from STPB) can be discharged to the 8H retention basin. Response from the State is anticipated within 2 weeks from the date of this letter. However, until approval is received, disposal of water within the aforementioned parameters, should be managed in a manner consistent with #3 below - treatment by ETF. An Immediate Procedure Change (IPC) has been implemented on procedure 241-H-1977, "Draining Temporary Facility Dike (U)," by HLWEC preventing inadvertent discharges to the basin.

   The <0.5 ppm limit is consistent with the Resource Conservation and Recovery Act hazardous waste determination. In addition, the volume ratio of the basin assures that benzene will not exceed detectable limits at the H-017 outfall. Flushing the storm sewer and asphalt outside the dike after a discharge event with approximately 500 gallons of domestic water is recommended per guidance from ETF (Skip Wiggins). Flushing the storm sewer has been included in the draft revision of procedure 241-H-1977. The intent of the flushing requirement is to insure that water discharged to the basin will not get "held up" in the storm sewer line.

Water ≥0.5 ppm and <10 ppm

3. SCDHEC has approved the treatment of water containing ≥0.5 ppm and <10 ppm total benzene (free benzene + benzene liberated from STPB) at ETF. The associated NPDES permit modification to the H-016 outfall including benzene as "believed present" was also approved (Ref. 2&3). DHEC's approval was based upon the Hazardous Assessment Document (HAD) which was prepared by ETF for DWPF CCR wastewater. The HAD demonstrated that the facility could effectively remove 10 ppm benzene from 5000 GPD influent wastewater (Ref. 4). The ETF, due to the dilution factor of the H-Lift station and the anticipated volume of rain water requiring treatment may be able to accept rain water that contains non-degraded STPB that might result in > 10 ppm total benzene. Additional guidance is dependent upon the determination of STPB's degradation to benzene. HLWEC should be contacted if water containing higher than the 10 ppm total benzene limit is encountered (see #4 below). The storm water should be removed from the diked area and transported in drums, skid tank, or tanker truck to the receiver cell sump of the 2H evaporator for transfer and treatment at the ETF. The revision to the 241-H-1977 procedure will address this transfer.

Water ≥10 ppm

4. Water containing >10 ppm total benzene should be handled as hazardous waste and immediately placed into a staging area. HLWEC and the ITP Chemical Coordinator should be contacted if this situation is encountered.

It is understood that discharges to the basin have occurred in the past per HLWEC guidance (Ref. 1), however, it has been determined that a permit modification should be made before continuing with this practice. Past discharges have been below detectable limits at the H-017 basin outfall and subsequently have not resulted in a non-compliance situation. This evaluation is based on discussions with technical persons, available data, and process knowledge. However, curtailing discharges to the basin, until DHEC approval - see #2 above, is a precautionary step to avoid potential violations in the future.

Dike water which is containerized while awaiting sample results from the lab, should be labeled as "Rain Water Pending Analysis." NOTE: Water determined to contain $\geq$ 0.5 ppm total benzene which cannot be immediately transferred to ETF, must be handled as a hazardous waste.

If you have any questions regarding the aforementioned, please contact Douglas Blue of my staff at 7-0520 (Beeper 2651).

CC: G. T. Wright, 5002-H
T. M. Monahon, 703-H
R. M. Satterfield, 719-4A
C. J. Baker, 5002-H
B. G. Croley, 241-120H
E. R. Ennis, 241-120H
J. N. Brooke, 241-119H
C. A. Polson, 241-84H
C. G. Lampley, 241-154H
R. W. Wilson, 703-H
C. B. Stevens, 742-6G
A. W. Wiggins, 241-84H
W. B. VanPelt, 241-152H
J. M. Brantley, 241-84H
T. P. Gaughan, 241-152H
D. M. Blue, 742-6G
R. W. Weigel, 742-A
W. L. Payne, 742-A
T. A. Syfert, 742-6G
M. A. Hunter, 742-6G
C. D. Helton, 703-7C
A. P. Cristensen, 241-82H
J. B. Harris, 241-152H
R. K. Larsen, 241-102F

W-0517 First

BECHTEL SAVANNAH RIVER, INC.

INTEROFFICE MEMORANDUM

CRH,
Pls. handle..... How bout McConathy? Also, I don't see a √ list here!
WO 7/20

July 19, 1993

TO: D.C Bumgardner - 707-H
J.T. Kato - 704-3N
Cary Stevens - 703-H
D.W. Dunaway - 742-A
Ann LeHuray - EBASCO

TOLD OR BUT I FORWARDED TO J. McCONATHY.
CRH 7/29

FROM: Jim Fiorillo - 966W-B14

SUBJECT: **PROJECT S-4062 RHLWE ENVIRONMENTAL PERMITS CHECKLIST (U)**

Attached, for your review, is a copy of the Draft Environmental Permit Requirements Checklist, prepared in accordance with the DE DP-315 Procedural requirements. This checklist was completed on the basis of information discussed during a review meeting held on June 25, 1993, in 703-H (reference subject memo **WER-HLE-931081**).

Please review this checklist and respond with any questions or corrections prior to August 1, 1993, so that it can be routed for the required signatures. Copies of available permits/approvals are attached. It is understood that HLWE has accepted responsiblity for coordinating the remaining actions.

Thank you.

cc: B.K. Shete - 966W-B20
W.S. Gray - 966W-B14
J.M. Lovekamp - 966W-B20
D.J. Martin - 707-H
R.K. Larsen - 742-6G
M.A. Hunter - 742-6G

Written response required: **YES - 8/1/93**

WESTINGHOUSE SAVANNAH RIVER COMPANY

INTER-OFFICE MEMORANDUM

June 29, 1993 WER-HLE-931081

TO: D.J. Martin, 707-H

FROM: D.C. Burngardner, 707-H

S-4062 REPLACEMENT HIGH LEVEL WASTE EVAPORATOR ENVIRONMENTAL PERMIT STATUS MEETING (U).

This letter summarizes discussions from a meeting held 6/25/93 in 703-H, room 71. The purpose of the meeting was to complete a Design Engineering Review for Environmental Compliance, review the RHLWE Permitting Plan, discuss DE's NESHAPS concerns, and develop a path forward for completing the NESHAPS Sampling Protocol.

SUMMARY:

•The DE Environmental Permits Requirements Checklist was completed. Permits were identified as applicable, not applicable, or applicability to be determined. Groups responsible for each permit were identified. Status of permits was noted.

•The RHLWE Permitting Plan was reviewed in relation to the DE checklist. Telecommunications Permit, and Operation Certification of Wastewater Treatment Plant for Start-up must be added to the Permitting Plan. All other changes to the plan will be editorial to provide better organization and to update existing information.

•DE's NESHAPS concerns were discused. Jim Fiorillo has submitted calculations verifying that Ru-106 does not contribute significantly to the total radionuclide dose, and therefore does not need to be sampled at the stack.

•The use of different source terms for the NESHAP justification and application was explained by Randy Larsen. Calculations were done according to NESHAPS regulations to verify that the NESHAPS permit is required. A more realistic source term and calculations were submitted with the accepted application.

•Stack height was discussed. Present stack height based on ERDA 76-21 which is used as a guideline at SRS. The accepted NESHAPS application states stack height will be a minimum of 60 feet above the 300 ft. grade. SRTC has capability of modelling stack height more accurately than may have been done in the past. Cost associated with completing the study and making changes in design may negate any construction savings associated with changing the stack height.

•A preliminary NESHAPS Sampling Protocol was submitted to EPD in 1991. A final sampling protocol cannot be completed until the final ventilation and stack design is available.

ACTIONS:

•Randy Larsen will explain source term discrepancy to Brett Blount.

•Randy Larsen will verify that preliminary sampling protocol was submitted to EPA. If not, he will push EPD to submit it now.

•Doug. Burngardner will provide a list of the designs needed to completed the sampling protocol to DE.

•Bhau Shete will provide a schedule for delivery of the designs needed to complete the sampling protocol.

•Telecommunications Utilization Permit and Operations Certifications of Wastewater Treatment Plant for Start-up will be added to the RHLWE Permitting Plan when it is revised. Doug Burngardner and Matt Hunter will be responsible for revising the plan.

If you have any questions or comments please contact me at 557-8478.

CC: J.S. Ledbetter, 707-H*
J.A. Quillen, 707-H
R.A. DelCastilho, 742-2G*
S.A. Smith
R.K. Larsen, 742-6G*
M.A. Hunter, 742-6G*
C.B. Stevens,
B.K. Shete, 966W-B20-022*
J.M. Fiorillo, 966W*
A.S. Preston, 704-26F*
A. LeHuray, Lamar Bldg.*

* meeting attendees.

South Carolina
DHEC
Department of Health and Environmental Control
2600 Bull Street, Columbia, SC 29201

Interim Commissioner: Thomas E. Brown, Jr.

Board: John H. Burriss, Chairman
Richard E. Jabbour, DDS, Vice Chairman
Robert J. Stripling, Jr. Secretary

William E. Applegate, III,
Toney Graham, Jr., MD
Sandra J. Molander
John B. Pate, MD

Promoting Health, Protecting the Environment

PARTIAL PERMIT TO OPERATE

2 of 2

March 3, 1993

Westinghouse Savannah River Company
P. O. Box 616
Aiken, South Carolina 29802

Re: Project: F and H Area High Level Radioactive Waste Tank Farms
Construction Permit No.: 17,424-IW
County: Aiken and Barnwell

Dear Sirs:

Based on a final construction inspection conducted by Jeff Chapman on 2-26-93, this office does hereby authorize the F/H Area High-Level Radioactive Tank Farm to be placed into operation (the description of the F/H Area High-Level Radioactive Tank Farm is located on page 2 of this Permit to Operate).

Special Conditions: The special conditions applicable to the F/H Area High-Level Radioactive Tank Farm are located on pages 3 and 4 of this Permit to Operate.

If there are any questions concerning this project, please contact this office at 641-7670.

Yours truly,

Jeff W. Chapman
District Engineer
Lower Savannah District
Environmental Quality Control

JWC:chp

cc: Danny Dunaway, Westinghouse
A. B. Gould, DOE
Industrial Wastewater Division, SCDHEC

Project Description

The construction of two wastewater storage and treatment facilities and associated transfer systems, one in F-Area the other in H-Area, designed to treat wastewater generated at the F-Area Separations Facility, H-Area Separations Facility, Equipment Decontamination/Repair Facility, F/H Effluent Treatment Facility, Defense Waste Processing Facility, Receiving Basin for Offsite Fuels and Resin Regeneration Facility, and SRL Laboratory. The treatment facilities will also receive reactor filter backwash, incidental wastes, and process chemicals.

The F-Area facility consists of the following equipment:

1. 22 tanks, eight (8) of which are 750,000 gal Type I tanks (numbers 1-8), ten (10) 1,300,000 gal Type III/IIIA tanks (numbers 25-28, 33-34, and 44-47), and four (4) 1,300,000 gal Type IV tanks (numbers 17-20).
2. Two evaporator systems (242-F and 242-16F) each of which consists of an evaporator, condenser, mercury collection tank, cesium removal pump tank and column, overheads hold tanks, and overheads diverting tank (242-F only). The 242-F evaporator system also contains a waste concentrate transfer system.
3. Six (6) diversion boxes (FDB1, FDB2, FDB3, FDB4, FDB5, FDB6)
4. Three (3) pump pits (FPP1, FPP2, FPP3)
5. Associated tanks, pumps, and piping.

The H-Area facility consists of the following equipment:

1. 27 tanks, four (4) of which are 750,000 gal Type I tanks (numbers 9-12), three (3) are 1,030,000 gal Type II tanks (numbers 13-15), sixteen (16) 1,300,000 gal Type III/IIIA tanks (numbers 29-32, 35-43, 48, 49, and 51), and four (4) 1,300,000 gal Type IV tanks (numbers 21-24).
2. Two evaporator systems (242-H and 242-16H) each of which consists of an evaporator, condenser, mercury collection tank, cesium removal pump tank and column, and overheads hold tanks. The 242-H evaporator system also contains a waste concentrate transfer system.
3. Eight (8) diversion boxes (HDB1, HDB2, HDB3, HDB4, HDB5, HDB6, HDB7, HDB8)
4. Ten (10) pump pits (HPP1, HPP2, HPP3, HPP4, HPP5, HPP6, HPP7, HPP8, HPP9, HPP10)
5. In-Tank Precipitation Process consisting of:
   a. Two (2) Cross flow filters
   b. One (1) precipitate stripper column
   c. One (1) wash stripper column
   d. Two (2) hold tanks
6. Associated tanks, pumps, and piping.

This permit also includes the transfer line between the F-Area and H-Area facilities.

SPECIAL CONDITIONS

1. The permittee shall maintain at each permitted facility a complete Operations and Maintenance Manual for the waste treatment system. The manual shall be made available for on-site review during normal working hours. The manual shall contain operation and maintenance instructions for all equipment and appurtenances associated with the waste treatment system. The manual shall contain a general description of the treatment process(es), operating characteristics that will produce maximum treatment efficiency and corrective action to be taken should operating difficulties be encountered.

2. The permittee shall provide for the performance of routine daily treatment plant inspections by a certified operator of the appropriate grade. The inspections shall include, but are not limited to, areas which require a visual observation to determine efficient operations and for which immediate corrective measures can be taken using the O & M manual as a guide. All inspections shall be recorded and shall include the date, time and name of person making the inspection, corrective measures taken, and routine equipment maintenance, repair, or replacement performed. The permittee shall maintain all records of inspections at the permitted facility and the records shall be made available for on-site review during normal working hours.

3. The permittee shall develop and implement a Best Management Practices (BMP) plan to identify and control the discharge of significant amounts of oils and the hazardous and toxic substances listed in 40 CFR Part 117 and Tables II and III of Appendix D to 40 CFR Part 122. The plan shall include a listing of all potential sources of spills or leaks of these materials, a method for containment, a description of training, inspection and security procedures, and emergency response measures to be taken in the event of a discharge to surface waters or plans and/or procedures which constitute an equivalent BMP. Sources of such discharges may include materials storage areas; in-plant transfer, process and material handling areas; loading and unloading operations; plant site runoff; and sludge and waste disposal areas. The BMP plan shall be developed, and updated as necessary, in accordance with good engineering practices, shall be documented in narrative form, and shall include any necessary plot plans, drawings, or maps. The BMP plan shall be developed no later than six months after issuance of the final permit (or modification), shall be implemented no later than one year after issuance of the final permit (or modification). A Spill Prevention Control and Countermeasure (SPCC) plan may be used in lieu of a BMP plan if BMP requirements are satisfied. The BMP plan or its equivalent shall be maintained at the plant site and shall be available for inspection by EPA and Department personnel.

4. No chemicals (process or otherwise) shall be added to the waste tanks which will alter the composition of the F/H ETF effluent from that which was evaluated for the NPDES permit.

5. The addition (not replacement) of new piping and chemical feed systems, even though related to the F/H Tank Farm process, shall not be considered normal operation if the piping and/or feed systems are to be located outside the tank farm boundary.

6. Once waste removal begins on a tank with a leak or crack and the waste is removed to a level below the lowest known leak or crack, that level shall become the maximum operating level of the tank and shall not be exceeded unless the exceedance is a temporary result of the waste removal process.

7. No tank that leaks or has leaked shall be used for waste receipt without prior approval from this Department. This condition does not apply to the necessary addition of waste for waste removal purposes. Also, this condition does not apply to the use of tank 13, the 242-H evaporator feed tank, provided the construction and utilization of the replacement evaporator, 242-25H, and it's associated feed tank do not deviate significantly from the State approved schedule. Any schedule changes must be approved by this office.

8. Within 60 days from the effective date of this permit the Permittee shall submit to this office a report containing the QA/QC procedures followed during the installation of the liner extension within the ITP hold tank area.

9. The Permittee shall maintain contingency plans or emergency procedures in place to respond to any known emergency situation with the potential to negatively impact human health or the environment. The plans and/or procedures shall be updated as necessary to include new information or changing conditions.

10. On June 30, 1987 the permittee submitted a revised RCRA Part A permit application which included the high-level radioactive waste tank system(s) contained in this permit. After this office issues the wastewater construction and operating permits for this facility, the permittee should amend its RCRA Part A permit to delete the tank system(s).

11. Based on a review of the Tank Assessment Report, submitted as a requirement of the Federal Facilities Agreement (FFA), Section IX, this office has determined that the Type I tanks identified as tanks 2-8 are approvable as equivalent devices for secondary containment. The Type I tanks, however, should only be used for waste receipt when there is no suitably available volume in an approved Type III tank. Furthermore, if any Type I tank develops a leak which exceeds the capacity of the 5-foot deep secondary containment pan, this approval shall be rescinded and no additional waste shall be directed to these Type I tanks.

12. This permit is being issued after review and approval of a construction permit application submitted to the State of South Carolina pursuant to the requirements of a Federal Facilities Agreement (FFA) entered into by the United States Department of Energy (the permittee), the United States Environmental Protection Agency, and The State of South Carolina on January 15, 1993. In addition to the conditions specifically stated in this permit, the permittee shall be subject to all applicable requirements of Section IX, including referenced appendices, of the FFA.

South Carolina
DHEC
Department of Health and Environmental Control
2600 Bull Street, Columbia, SC 29201

Interim Commissioner: Thomas E. Brown, Jr.

Board: John H. Burriss, Chairman
Richard E. Jabbour, DDS, Vice Chairman
Robert J. Stripling, Jr. Secretary

William E. Applegate, III,
Toney Graham, Jr., MD
Sandra J. Molander
John B. Pate, MD

Promoting Health, Protecting the Environment

January 25, 1993

Mr. W.D. Dunaway, Manager
Permitting Field Support Group
Environmental Protection Department
Westinghouse Savannah River Co.
P.O. Box 616
Aiken, SC

Re: Construction Permit #17,424-IW
SRS F/H-Area
Aiken and Barnwell County

Dear Sir:

Enclosed is a State Construction Permit for the above-referenced wastewater treatment facility. The conditions of the permit are explicitly stated: construction is to be performed in accordance with this permit and the supporting engineering report, plans and specifications approved by this Office.

Your EQC District contact from this Department is Myra Reece (address below). She should be notified when construction has begun and when the facility is ready for operation. A permit to operate must be issued before the permitted facility is placed in operation. At the time you request an operating permit you must submit a letter to our District Office from the Registered Engineer who signed Item X on the Application for Permit to Construct. The Engineer should certify that the construction has been completed in accordance with the approved plans and specifications. At the discretion of the Department, a final inspection may be required prior to operating permit issuance.

In accordance with State Law, your facility will be required to have an operator-in-charge who has been certified by the SC Environmental Certification Board. Your facility has been classified in Group IV-P/C, necessitating an operator holding a Grade A-P/C or higher certificate. You will not be given permission to operate your facility until a properly qualified operator(s) has been obtained. Questions in this matter should be directed to William R. Moore, SC Environmental Certification Board, 2221 Devine Street, Suite 320, Columbia, SC 29205.

Sincerely,

Marion F. Sadler, Jr., Acting Director
Industrial & Agricultural
Wastewater Division

Address of District Contact:
218 Beaufort Street, NE
Aiken, S.C. 29801

MFS/LEA

cc: Myra Reece, Lower Savannah EQC

recycled paper

South Carolina
DHEC
Department of Health and Environmental Control
2600 Bull Street
Columbia, SC 29201

Bureau of Water Pollution Control
Permit To Construct

F/H-Area

Permission is hereby granted to: Westinghouse Savannah River Co.
P.O. Box 616
Aiken, S.C.

for the construction of a wastewater treatment system in accordance with the construction plans, specifications, engineering report and Construction Permit Application signed by Richard L. Stegen, Ihor John Nyszczot, Richard Kowalski and John William Nelson, Registered Professional Engineers, S. C. Registration Numbers: 12633, 10901, 14077, and 4448 respectively.

Project Name: F and H-Area High-Level Radioactive Waste Tank Farms **County:** Aiken & Barnwell

Project Description: The description of the F/H Area High-Level Radioactive Tank Farm is located on page 2 of this permit.

The wastewater generated at this facility will be sent to the F/H ETF, precipitate slurry and sludge will be sent to the DWPF, and decontaminated salt solution will be sent to the Z-Area Saltstone Manufacturing and Disposal Facility.

There is no direct discharge from this facility.

The effluent concentrations of those constituents the wastewater treatment system is designed to remove or reduce are as required by the receiving facilities.

Treatment System Classification: Group IV-PC.

Special Conditions: The special conditions applicable to the F/H Area High-Level Radioactive Tank Farm are located on page 3 and 4 of this permit.

Permit Number: 17,424-IW **Date of Issue:** January 25, 1993

Expiration Dates: Unless construction begins prior to January 25, 1994 and construction is completed prior to January 1, 1998 this permit will expire.

In accepting this permit, the owner agrees to the admission of properly authorized persons at all reasonable hours for the purpose of sampling and inspection.

THIS IS A PERMIT FOR CONSTRUCTION ONLY AND DOES NOT CONSTITUTE STATE DEPARTMENT OF HEALTH AND ENVIRONMENTAL CONTROL APPROVAL, TEMPORARY OR OTHERWISE, TO PLACE THIS SYSTEM IN OPERATION.

Marion F. Sadler

Bureau of Water Pollution Control

Project Description

The construction of two wastewater storage and treatment facilities and associated transfer systems, one in F-Area the other in H-Area, designed to treat wastewater generated at the F-Area Separations Facility, H-Area Separations Facility, Equipment Decontamination/Repair Facility, F/H Effluent Treatment Facility, Defense Waste Processing Facility, Receiving Basin for Offsite Fuels and Resin Regeneration Facility, and SRL Laboratory. The treatment facilities will also receive reactor filter backwash, incidental wastes, and process chemicals.

The F-Area facility consists of the following equipment:

1. 22 tanks, eight (8) of which are 750,000 gal Type I tanks (numbers 1-8), ten (10) 1,300,000 gal Type III/IIIA tanks (numbers 25-28, 33-34, and 44-47), and four (4) 1,300,000 gal Type IV tanks (numbers 17-20).
2. Two evaporator systems (242-F and 242-16F) each of which consists of an evaporator, condenser, mercury collection tank, cesium removal pump tank and column, overheads hold tanks, and overheads diverting tank (242-F only). The 242-F evaporator system also contains a waste concentrate transfer system.
3. Six (6) diversion boxes (FDB1, FDB2, FDB3, FDB4, FDB5, FDB6)
4. Three (3) pump pits (FPP1, FPP2, FPP3)
5. Associated tanks, pumps, and piping.

The H-Area facility consists of the following equipment:

1. 27 tanks, four (4) of which are 750,000 gal Type I tanks (numbers 9-12), three (3) are 1,030,000 gal Type II tanks (numbers 13-15), sixteen (16) 1,300,000 gal Type III/IIIA tanks (numbers 29-32, 35-43, 48, 49, and 51), and four (4) 1,300,000 gal Type IV tanks (numbers 21-24).
2. Three (3) evaporator systems (242-H, 242-16H, and 242-25H) each of which consists of an evaporator, condenser, mercury collection tank, cesium removal pump tank and column, and overheads hold tanks. The 242-H evaporator system also contains a waste concentrate transfer system.
3. Eight (8) diversion boxes (HDB1, HDB2, HDB3, HDB4, HDB5, HDB6, HDB7, HDB8)
4. Ten (10) pump pits (HPP1, HPP2, HPP3, HPP4, HPP5, HPP6, HPP7, HPP8, HPP9, HPP10)
5. In-Tank Precipitation Process consisting of:
   a. Two (2) Cross flow filters
   b. One (1) precipitate stripper column
   c. One (1) wash stripper column
   d. Two (2) hold tanks
6. Associated tanks, pumps, and piping.

This permit also includes the transfer line between the F-Area and H-Area facilities, the line between the H-Area facility and the DWPF, and the pump pits (APP and LPPP) associated with the line from H-Area to the DWPF including all associated pumps and tanks.

SPECIAL CONDITIONS

1. The permittee shall maintain at each permitted facility a complete Operations and Maintenance Manual for the waste treatment system. The manual shall be made available for on-site review during normal working hours. The manual shall contain operation and maintenance instructions for all equipment and appurtenances associated with the waste treatment system. The manual shall contain a general description of the treatment process(es), operating characteristics that will produce maximum treatment efficiency and corrective action to be taken should operating difficulties be encountered.

2. The permittee shall provide for the performance of routine daily treatment plant inspections by a certified operator of the appropriate grade. The inspections shall include, but are not limited to, areas which require a visual observation to determine efficient operations and for which immediate corrective measures can be taken using the O & M manual as a guide. All inspections shall be recorded and shall include the date, time and name of person making the inspection, corrective measures taken, and routine equipment maintenance, repair, or replacement performed. The permittee shall maintain all records of inspections at the permitted facility and the records shall be made available for on-site review during normal working hours.

3. The permittee shall develop and implement a Best Management Practices (BMP) plan to identify and control the discharge of significant amounts of oils and the hazardous and toxic substances listed in 40 CFR Part 117 and Tables II and III of Appendix D to 40 CFR Part 122. The plan shall include a listing of all potential sources of spills or leaks of these materials, a method for containment, a description of training, inspection and security procedures, and emergency response measures to be taken in the event of a discharge to surface waters or plans and/or procedures which constitute an equivalent BMP. Sources of such discharges may include materials storage areas; in-plant transfer, process and material handling areas; loading and unloading operations; plant site runoff; and sludge and waste disposal areas. The BMP plan shall be developed, and updated as necessary, in accordance with good engineering practices, shall be documented in narrative form, and shall include any necessary plot plans, drawings, or maps. The BMP plan shall be developed no later than six months after issuance of the final permit (or modification), shall be implemented no later than one year after issuance of the final permit (or modification). A Spill Prevention Control and Countermeasure (SPCC) plan may be used in lieu of a BMP plan if BMP requirements are satisfied. The BMP plan or its equivalent shall be maintained at the plant site and shall be available for inspection by EPA and Department personnel.

4. No chemicals (process or otherwise) shall be added to the waste tanks which will alter the composition of the F/H ETF effluent from that which was evaluated for the NPDES permit.

5. The addition (not replacement) of new piping and chemical feed systems, even though related to the F/H Tank Farm process, shall not be considered normal operation if the piping and/or feed systems are to be located outside the tank farm boundary.

6. Once waste removal begins on a tank with a leak or crack and the waste is removed to a level below the lowest known leak or crack, that level shall become the maximum operating level of the tank and shall not be exceeded unless the exceedance is a temporary result of the waste removal process.

7. No tank that leaks or has leaked shall be used for waste receipt without prior approval from this Department. This condition does not apply to the necessary addition of waste for waste removal purposes. Also, this condition does not apply to the use of tank 13, the 242-H evaporator feed tank, provided the construction and utilization of the replacement evaporator, 242-25H, and it's associated feed tank do not deviate significantly from the State approved schedule. Any schedule changes must be approved by this office.

8. Within 60 days from the effective date of this permit the Permittee shall submit to this office a report containing the QA/QC procedures followed during the installation of the liner extension within the ITP hold tank area.

9. The Permittee shall maintain contingency plans or emergency procedures in place to respond to any known emergency situation with the potential to negatively impact human health or the environment. The plans and/or procedures shall be updated as necessary to include new information or changing conditions.

10. On June 30, 1987 the permittee submitted a revised RCRA Part A permit application which included the high-level radioactive waste tank system(s) contained in this permit. After this office issues the wastewater construction and operating permits for this facility, the permittee should amend its RCRA Part A permit to delete the tank system(s).

11. Based on a review of the Tank Assessment Report, submitted as a requirement of the Federal Facilities Agreement (FFA), Section IX, this office has determined that the Type I tanks identified as tanks 2-8 are approvable as equivalent devices for secondary containment. The Type I tanks, however, should only be used for waste receipt when there is no suitably available volume in an approved Type III tank. Furthermore, if any Type I tank develops a leak which exceeds the capacity of the 5-foot deep secondary containment pan, this approval shall be rescinded and no additional waste shall be directed to these Type I tanks.

12. This permit is being issued after review and approval of a construction permit application submitted to the State of South Carolina pursuant to the requirements of a Federal Facilities Agreement (FFA) entered into by the United States Department of Energy (the permittee), the United States Environmental Protection Agency, and The State of South Carolina on January 15, 1993. In addition to the conditions specifically stated in this permit, the permittee shall be subject to all applicable requirements of Section IX, including referenced appendices, of the FFA.

UNITED STATES ENVIRONMENTAL PROTECTION AGENCY

REGION IV

345 COURTLAND STREET, N.E.
ATLANTA, GEORGIA 30365

OCT 10 1990

OPTIONAL FORM 99 (7-90)

FAX TRANSMITTAL | # of pages ▶ 4

To Steve Scoarce	From Brent Blunt
Dept./Agency	Phone #
Fax #	Fax #

NSN 7540-01-317-7368 5099-101 GENERAL SERVICES ADMINISTRATION

4APT-AE

CERTIFIED MAIL
RETURN RECEIPT REQUESTED

Mr. M. D. Dukes, Manager
Environmental Support Section
Environmental Protection Department
Westinghouse Savannah River Company
P. O. Box 616
Aiken, South Carolina

Subject: National Emission Standard for Hazardous Air Pollutants (NESHAP) Construction Approval for the Replacement High Level Waste Evaporator (RHLWE)

Dear Mr. Dukes:

In accordance with the provisions of 40 C.F.R. §61.08, we have reviewed information submitted on June 29, 1990, to determine the ability of the referenced source to comply with the NESHAP radionuclide emission standard promulgated at 40 C.F.R. Part 61, Subpart H - National Emission Standards for Emissions of Radionuclides Other Than Radon From Department of Energy Facilities. Based upon this review, approval is hereby granted for construction and operation of the RHLWE. During construction and operation of the source, the Department of Energy and the Westinghouse Savannah River Company (hereinafter referred to as the Applicants) will be responsible for complying with all applicable requirements of 40 C.F.R. Part 61, Subpart A (NESHAP General Provisions) and 40 C.F.R. Part 61, Subpart H. These requirements include, but are not limited to the following provisions:

1. The RHLWE shall be designed, constructed and operated as described in the NESHAP application dated June 29, 1990, unless superseded by a more stringent condition below.

2. Prior to and following startup of the source, the Applicants shall comply with the startup notification requirements of 40 C.F.R. §61.09.

Printed on Recycled Paper

3. Within 90 days of receipt of this letter, the Applicants shall submit for EPA approval a protocol for the periodic sampling that will be used to verify that the RHLWE is exempt from the requirement to install continuous radionuclide sampling equipment on RHLWE release points. The radionuclides sampled in order to provide this verification shall include tritium, I-129, Cs-137, and any particulate radionuclide that accounts for more than 10 percent of the offsite radionuclide dose attributable to emissions from the RHLWE. In addition to detailing the sampling and analytical procedures for these radionuclides, the protocol shall identify the calculation procedures that will be used to verify that potential radionuclide emissions from each RHLWE release point would result in an offsite effective dose equivalent of less than 0.1 mrem/year.

4. The initial periodic test performed to verify that the RHLWE is exempt from the requirement to install and operate continuous sampling equipment for radionuclide emissions shall be conducted within 90 days after startup of the RHLWE. In accordance with the provisions of 40 C.F.R. §61.13(a)(2), EPA shall be notified at least 30 days prior to the initial test in order to afford the Agency the opportunity to observe the testing.

5. In accordance with the provisions of 40 C.F.R. §61.94, annual compliance reports submitted to EPA shall include information regarding radionuclide emission rates from RHLWE release points. In addition, radionuclide emissions from the RHLWE shall be considered when performing air dispersion modelling in order to determine the maximum radionuclide effective dose equivalent SRS causes to any member of the public at any offsite point where there is a residence, school, business, or office.

6. At all times, including periods of startup, shutdown, and malfunction, the facility shall be maintained and operated in a manner consistent with good air pollution control practices for minimizing emissions.

7. No condition presented herein precludes the Applicants from adherence to additional or more stringent conditions or requirements of any other Federal, State, or local approval or permit.

8. Failure to comply with the conditions of this approval may result in revocation of the approval and/or enforcement action by the Agency.

9. All notifications, reports, and correspondence shall be submitted to the Chief, Air Enforcement Branch, Air, Pesticides, and Toxics Management Division, 345 Courtland Street, NE, Atlanta, Georgia 30365 with copies to the Chief, Bureau of Air Quality Control, SC Department of Health and Environmental Control and to the Director, Bureau of Radiological Health, SC Department of Health and Environmental Control.

This approval is granted solely under Section 112 of the Clean Air Act, as amended (42 U.S.C. 7401 et seq.) and in no way affects approvals under other Federal, State, or local authorities.

If you have any questions about the approval granted in this letter, please contact Mr. Brian Beals at FTS: 257-2904 or Mr. C. L. Wakamo at FTS: 257-3907.

Sincerely yours,

Winston A. Smith

Winston A. Smith, Director
Air, Pesticides, and Toxics
Management Division

last

cc: Mr. S. R. Wright
U. S. Department of Energy
P.O. Box A
Aiken, South Carolina

Mr. J. E. Layden
U. S. Department of Energy
P. O. Box A
Aiken, South Carolina

Mr. Otto Pearson, P.E., Chief
Bureau of Air Quality Control
SC Department of Health and Environmental Control
2600 Bull Street
Columbia, South Carolina 29201

Mr. Heywood G. Shealy, Director
Bureau of Radiological Health
SC Department of Health and Environmental Control
2600 Bull Street
Columbia, South Carolina 29201

W-0517

South Carolina
DHEC
Department of Health and Environmental Control
2600 Bull Street, Columbia, SC 29201

Interim Commissioner: Thomas E. Brown, Jr.

Board: John H. Burriss, Chairman
Richard E. Jabbour, DDS, Vice Chairman
Robert J. Stripling, Jr. Secretary

William E. Applegate, III,
Toney Graham, Jr., MD
Sandra J. Molander
John B. Pate, MD

Promoting Health, Protecting the Environment

July 7, 1993

Mr. J.V. Odum, Manager
Facility Support Section
Environmental Protection Department
Westinghouse Savannah River Company
Post Office Box 616
Aiken, SC 29802

RECEIVED
JUL 30 1993
ENVIRONMENTAL PROTECTION DEPT.
WESTINGHOUSE SAVANNAH RIVER CO.

Re: Savannah River Site
F and H Tank Farms
SC1 890 008 989

Dear Mr. Odum:

This letter is in reference to the April 1, 1993 letter from Westinghouse Savannah River Company which included revision 10 to the Part A application for the Savannah River Site (SRS). Revision 10 deleted many of the references to the F and H Tank Farms in the Part A application. In effect, the submission of revision 10 was a request to withdraw the F and H Tank Farms from interim status under the Resource Conservation and Recovery Act (RCRA). In order to perfect the request for withdrawal, the references to the F and H Tank Farms on pages 4k and 4p of the revised pages should be removed. By listing the F and H Tank Farms on the Part A, the reader may believe that, although the storage and treatment capacities under RCRA are zero, the units still have interim status and are therefore subject to RCRA closure requirements. However, if all references to the F and H Tank Farms are removed, confusion of this nature will not arise.

Upon receipt of revisions to pages 4k and 4p as requested above, the Department will proceed with consideration of the request to withdraw the F and H Tank Farms from interim status under RCRA.

If you have any questions, please contact me at (803) 734-5203.

Sincerely,

Shelly Sherritt

Shelly Sherritt
Hazardous Waste Permitting
Bureau of Solid & Hazardous Waste Management

SS/rrb

cc: A.B. Gould, U.S. DOE
John Johnston, U.S. EPA, Region IV
Myra Reece, Lower Savannah EQC

recycled paper

W-0084
W-0517

Westinghouse
Savannah River Company

P.O. Box 616
Aiken, SC 29802

ESH-ESS-93-0388

July 22, 1993

Mr. Larry E. Arrington, Engineer
Industrial and Agricultural Wastewater Division
South Carolina Department of Health
and Environmental Control
2600 Bull Street
Columbia, SC 29201

Dear Mr. Arrington:

SAVANNAH RIVER SITE NOTIFICATION OF THE ADDITION OF SODIUM TETRAPHENOL BORATE AND BENZENE IN WASTEWATER DISCHARGES AT NPDES OUTFALLS H-007, H-008, AND H-017 (U)

Per our July 20, 1993, phone discussion, the SRS is notifying your department that H-Area secondary containment rainwater containing Sodium Tetraphenyl Borate and Benzene in concentrations <0.005 mg/l (primary drinking water standards) will be intermittently discharged to NPDES Outfalls H-007, H-008, and H-017. Currently these chemicals are not listed as "believed present" on the 2C NPDES permit applications for these outfalls.

The secondary containment dikes contain a maximum of 1,000 gallons of rainwater. During discharges, this would combine with either approximately 50,000 gallons per day discharge at Outfall H-007, approximately 1,000,000 gallons per day discharge at Outfall H-008, and/or approximately 1,200,000 gallons per day discharge at Outfall H-017. After mixing with these other internal waste streams, the maximum concentration of Sodium Tetraphenyl Borate or Benzene in the discharge at the outfalls will be below one-third of the applicable water quality criteria.

In addition, as discussed, the SRS will have a written procedure to ensure that records are kept and these discharges are managed appropriately as indicated to your department.

These constituents are indicated as sources to these outfalls and are marked "believed present" in the 2C permit application for the NPDES SC0000175 renewal package currently under review. It is our understanding that this notification provides SRS with interim approval.

Should you require additional information or clarification on the enclosed, you may contact R. W. Weigel at (803) 725-1666

Yours very truly,

J. L. Keyes

J. L. Keyes, Manager
Surface Water, Wetlands, & Land Protection Group
Environmental Protection Department

RWW:cs

CC: A. B. Gould, DOE-ECD, 703-47A
M. C. Reece, SCDHEC, Aiken

W-0084
W-0517

Mr. L. E. Arrington
ESH-ESS-93-0388
July 22, 1993

BCC: H. L. Davis, DOE-ECD, 703-47A
C. R. Hayes, 703-18A
J. L. Keyes, 742-A
W. L. Payne, 742-A
T. Syfert, 742-6G
K. S. Wierzbicki, 742-6G
C. B. Stevens, 742-6G
A. W. Wiggins, 241-84H
C. A. Polson, 241-84H
B. D. Silas, 777-10A
D. Anderson, 707-H
S. E. Smith, 724-A
A. R. Gough, 992-3W
Records Administration, 773-52A
EPD File, 742-A

W-0517

INTER-OFFICE MEMORANDUM
Savannah River Site

Date: 24-Jun-1993 11:16am EDT
From: Bill Payne
PAYNE-WL-Y7708
Dept: EPD/ESH&QA
Tel No: 59002

TO: See Below

Subject: BENZENE DISPOSAL ORIGINATING FROM ITP (U)

Ref: Phone call, Doug Blue to Bill Payne, 6/24/93

You asked me two questions in the referenced phone conversation. Here are my answers.

1. Can benzene contaminated rainwater go to the stormwater retention basin and on to H-017 outfall?

   You submitted a modified H-017 outfall package to Randy Weigell in may of this year and included benzene as believed present at H-017; however, the package will not be submitted to DHEC until August, '93. You cannot discharge benzene to the retention basin (above detectable levels) until DHEC approves it in the new NPDES Permit.

2. Can benzene contaminated rainwater from the Filter Cell Sump be disposed the same way as proposed for the ITP Test Facility Dike in the June 21 letter to DHEC?

   I called DHEC and asked them to give GENERAL approval for disposal of ITP sump/dike/secondary containment rainwater contaminated with C6H6 in the same manner as proposed in the June 21 letter. DHEC responded that they can probably make it a general approval and will try to get a response out this week.

Distribution:

TO:	Douglas M. Blue	(BLUE-DM-L4808 @A1@SASRS2)
CC:	Randall W. Weigel	(WEIGEL-RW-Y8299)
CC:	Chuck Hayes	(HAYES-CR-Z9722)
CC:	Lori S. Coward	(COWARD-LS-Z6459)
CC:	JOHN L. KEYES	(KEYES-JL-08263)
CC:	Kim S. Wierzbicki	(WIERZBICKI-KS-06535 @A1@SASRS2

W-0517

INTER-OFFICE MEMORANDUM
Savannah River Site

Date: 09-Jun-1993 04:45pm EDT
From: Matthew A. Hunter
HUNTER-MA-L2335 AT A1 AT SASRS2
Dept: HLWEC
Tel No: 557-0520

TO: See Below

Subject: RE: Leak Testing Of Embedded Filtrate Lines

Per the requirements in the tank assessment, we must do a hydrostatic test to determine the integrity of the embedded pipe. The real commitment is to test the integrity of the line, the method is not as important. However, since we have a method which will surpass the hydrostatic test and it will be performed on the same frequency, an update to the tank assessment is not required. High Level Waste Environmental Compliance and the Environmental Protection Department are in agreement that the State will not require notification since we are going above and beyond the original commitment in the tank assessment. If you have any questions please contact Douglas Blue at 7-0520.

Distribution:

TO:	Chi L Leung	(LEUNG-CL-O8827 AT A1 AT SASRS2)
CC:	Chuck Hayes	(HAYES-CR-Z9722 @A1@SLSRP1)
CC:	Douglas M. Blue	(BLUE-DM-L4808 AT A1 AT SASRS2)
CC:	TIMOTHY P. GAUGHAN	(GAUGHAN-TP-O8815 AT A1 AT SASRS2)
CC:	Gary L. Cauthen	(CAUTHEN-GL-Y8117 @A1@SRXSS2)
CC:	Bill Van Pelt	(VANPELT-WB-O7016 AT A1 AT SASRS2)

W-0517
1

INTER-OFFICE MEMORANDUM
Savannah River Site

Date: 08-Jun-1993 05:45pm EDT
From: Matthew A. Hunter
HUNTER-MA-L2335 AT A1 AT SASRS2
Dept: HLWEC
Tel No: 557-0520

TO: Douglas M. Blue (BLUE-DM-L4808 AT A1 AT SASRS2)
TO: Chuck Hayes (HAYES-CR-Z9722 @A1@SLSRP1)

Subject: Hydrotesting vs Eddy Current

Whaddya Think?

TOLD MATT THIS
WAS ACCEPTABLE TO ME.
CRH
6/9

2

INTER-OFFICE MEMORANDUM
Savannah River Site

Date: 08-Jun-1993 08:46am EDT
From: Chi L Leung
LEUNG-CL-08827 AT A1 AT SASRS2
Dept: Waste Management
Tel No: 78327

TO: Matthew A. Hunter (HUNTER-MA-L2335 AT A1 AT SASRS2)

CC: Bill Van Pelt (VANPELT-WB-07016 AT A1 AT SASRS2)
CC: Gary L. Cauthen (CAUTHEN-GL-Y8117 @A1@SRXSS2)
CC: TIMOTHY P. GAUGHAN (GAUGHAN-TP-08815 AT A1 AT SASRS2)

Subject: Leak Testing Of Embedded Filtrate Lines

A hydrostatic leak test is required in lieu of a visual inspection for the section of embedded filtrate piping between the Filter Cells and the Hold Tank Room [1,2]. However, a hydrostatic leak test for these embedded lines will not be possible without significant plant modifications. An alternative technique for examining the integrity of these lines is the Eddy Current test. The Eddy Current test is preferred over the hydrostatic leak test given the current plant configuration. Some of the advantages of using the Eddy Current technique are:

- no plant modification required (i.e.: a special "T" will be installed as part of the Backpulse System Modification project to allow access to the filtrate piping).
- lower contamination risk (i.e.: through a simpler inspection procedure).
- minimal impact to the process (i.e.: shorter downtime required for inspection).
- capable of trending deterioration of piping vs. a pass/fail check.
- detect cracks in the piping, the depth of each crack and the location of cracks.
- minimize generation of wastes (i.e.: liquid used in the hydrostatic leak test would require processing).
- minimize damage to the piping (i.e.: repeated pressurization of the pipe may induce stress to welds and joints).
- technique and test results can be certified by a Professional Engineer if required.

The Eddy Current (or other non-destructive technique) is an acceptable alternative to a "leak" test according to guidelines in the FAA. In addition, there are qualified personnel available on site to support the test at the required testing frequency.

Please incorporate the Eddy Current test, as a substitute for the hydrostatic leak test, into the Phase I Assessment Report for ITP [1].

Let me know if you need additional information concerning this matter.

Thanks.

References:

[1] Assessment Report Phase I For The In-Tank Precipitation Treatment Facility (U), Revision 0, 5/91

[2] WSRC-IM-91-63, Process Requirements for the In-Tank Precipitation

W-0517

OSR 3-4A-W (Rev 1-89)

WESTINGHOUSE SAVANNAH RIVER COMPANY

INTER-OFFICE MEMORANDUM

WER-HLE-930841

May 21, 1993

To: HLWE Cognizant Engineers

From: M. A. Hunter, 742-6G

Packaging of Modifications to Tank Farm Wastewater Permit (U)

Purpose

With the permitting of the tank farms as an Industrial Wastewater Treatment facility, all projects and direct and indirect work packages need to be screened to ensure that they will not physically alter or change the description of the facility as contained in the F- and H-Area Tank Farm Industrial Wastewater Permit Application or the Tank Assessment Reports. If work is to be done that will change the facility's description, High Level Waste Environmental Compliance (HLWEC) will need to request approval from the South Carolina Department of Health and Environmental Control (DHEC) through the Environmental Protection Department (EPD). In order to provide the appropriate information to the regulators, a package must be prepared describing the modification and sent to HLWEC for transmission to the regulators.

Background

Per requirements outlined in Section IX of the Federal Facility Agreement for the Savannah River Site (FFA), an Industrial Wastewater Permit application was submitted to the South Carolina Department of Health and Environmental Control (SCDHEC). At the same time, Tank Assessments were prepared and submitted. These tank assessments reviewed the adequacy of both the primary and secondary containment of all the waste containing components in the tank farms. Both the permit application and the tank assessments are source documents for the Industrial Wastewater Permit to Operate the F/H-Area Tank Farms and are considered as part of the permit. Therefore, work that will affect the description of the facilities as presented to the regulators in these documents must be submitted as a permit modification and will require a Professional Engineering certification.

To ensure that all work will receive the appropriate review, Waste Management is implementing the Environmental Compliance Checklist (ECC) through procedure WM-EC-8000, "Environmental Compliance Review and Checklist." This procedure prompts the reviewer to notify HLWEC whenever it appears work may require a modification package to be assembled. HLWEC will make the final determination with EPD input, if necessary, whether a modification package will be required.

2

There are two types of modifications that require the notification of HLWEC. The first type of modification is one that will change the description of the equipment, process, or chemical composition of the tank farms from what is listed in the permit application. The permit application allows flexibility in the operation of the tank farms by designating a wide variety of activities as "Normal Operations" as specified in Section 4.2 of the permit application. The waste handling equipment is described in Sections 6.0 and 7.0 in the permit application. These descriptions were written to describe typical equipment found in the tank farms. An overview of the processing of waste through the tank systems can be found throughout Section 4.0. If a work package will change any of the parameters and/or descriptions listed in the application, a Permit Modification Package (PMP) must be prepared to advise SCDHEC of the change and to request concurrence. The PMP should include at a minimum the following information:

- A description of parameter is being changed, including an application citation with exact verbiage.
- An explanation of why the change is necessary and all supporting documentation.
- An explanation of the impacts to tank farm process and analytic studies, if available.

HLWEC should be included in the development and approval of the PMP prior to contact with EPD for regulator concurrence.

A second modification type concerns work that will alter the structural secondary or primary containment as described in the Phase I and II Tank Assessment Report. These reports were generated to assess the adequacy of the containment for all the tank system components per requirements in the FFA. Systems or components that do not meet these requirements must be placed on a schedule for removal from service. The FFA also contains standards for either the upgrading or repair of existing systems and standards for new or replacement tank systems. If this type of modification is to be made, Design Engineering will be responsible for providing a Professional Engineer certified package. HLWEC will be notified by the Cognizant Engineer, who completes the ECC, in order to designate the work package as requiring a certification.

Conclusion

Through the Environmental Compliance Checklist review for both projects and work packages that will either effect the description in the Wastewater Permit Application or the Tank Assessments, it will be determined if approval from the regulators will be required. Packages that will directly effect the Wastewater Permit Application will need to be prepared by the responsible HLWE Cognizant Engineer. However, any work that will modify the containment of the tank systems will be prepared by Design Engineering personnel. Both types of packages must be prepare to inform the regulators of on-going activities in the tank farms and to assure them that Waste Management is being "Good Stewards of the Environment."

CC:

R. M. Satterfield, 719-4A
T. M. Monahon, 703-H
K. S. Wierzbicki, 742-6G
B. L. Lewis, 703-H
M. S. Peters, 703-F
G. D. Thaxton, 241-119H
M. A. Ceravolo, 703-H
T. B. Caldwell, 241-102F
A. W. Wiggins, 241-84H
G. L. Cauthen, 241-119H
T. L. Ortner, 241-152H
W. B. Van Pelt, 241-152H
S. A. Saunders, 241-102H
C. B. Stevens, 742-6G
R. K. Larsen, 742-6G
D. M. Blue, 742-6G
M. J. Hagenbarth, 742-6G

HIGH LEVEL WASTE
COGNIZANT ENGINEERS

C. I. Aponte, 241-102H
M. J. Augeri, 241-152H
G. M. Banerjee, 707-H
V. F. Bohman, 707-H
W. S. Brown, 241-102H
K. L. Cast, 707-H
V. C. Chudgar, 707-H
W. C. Clark, 703-H
D. R. Clemons, 703-F
L. S. Dee, 703-H
H. G. Desai, 707-H
R. C. Fowler, 241-152H
M. D. Frazer, 707-H
B. D. Freeman, 241-102F
M. D. Goodman, 241-84H
J. E. Griffiths, 241-102F
M. J. Horner, 241-119H
D. A. Jackson, 707-H
J. S. Ledbetter, 707-H
E. D. Lee, 241-152H
C. L. Leung, 241-152H
G. N. MacDougal, 241-119H
D. J. Martin, 707-H
T. F. Matheis, 707-H
G. J. Mocarski, 707-H
P. S. Mukherjee, 707-H
R. E. Nordstrom, 241-102H
P. W. Norris, 707-H
N. R. Pasala, 241-102H
D. L. Perella, 241-119H
P. I. Perez, 241-152H
E. M. Perrett, 241-119H
D. A. Pervis, 241-152H
T. K. Phi, 241-102H
W. E. Phillips, 241-152H
J. A. Quillen, 707-H
M. J. Rea, 707-H
M. P. Reimnitz, 707-H
P. J. Rice, 241-102H
M. A. Rios-Armstrong, 241-119H
W. P. Smith, 241-84H
R. S. Tran, 707-H
B. J. Trawinski, 241-102H
E. E. Zejewski, 241-119H

W-0517

WESTINGHOUSE SAVANNAH RIVER COMPANY

INTER-OFFICE MEMORANDUM

WER-WMQ-93-0159

April 29, 1993

TO: G. T. WRIGHT, 5002-H

FROM: D. G. STEINER, 703-H
7-1351

David G. Steiner

ASSESSMENT OF COMPLIANCE TO THE "SCDHEC PERMIT TO OPERATE #17, 424-IW; F AND H-AREA HIGH LEVEL RADIOACTIVE WASTE TANK FARMS" (U)

Ref: WSRC Inter-Office Memorandum, ESH-FSS-93-0129, C. R. Hayes to M. A. Hunter, "Same Subject"

This memorandum is to provide the assessment report relative to WSRC compliance with the twelve (12) special permit conditions for the subject facilities.

The attached report identifies that relative to the special conditions, documents exist that provide evidence of compliance to the conditions, and/or stipulate the measures put in place to accomplish the stated conditions.

Do not hesitate to call me at 7-1351 if you have any questions or comments.

DGS:TLB:jps
Att.

CC: L. J. Wickas, 719-4A
C. R. Hayes, 703-18A
M. A. Hunter, 742-6G
S. S. Cathey, 703-H
T. L. Bonnough, 742-G
J. P. Smith, 703-H (WMQA Files)

WESTINGHOUSE SAVANNAH RIVER COMPANY
WASTE MANAGEMENT QUALITY ASSURANCE DEPARTMENT

ASSESSMENT REPORT

ON COMPLIANCE OF THE

TWELVE (12) SPECIAL CONDITIONS FOR THE

SCDHEC PERMIT TO OPERATE #17, 424-IW; F AND H-AREA

HIGH-LEVEL RADIOACTIVE WASTE TANK FARMS

Ted Bonnough
April 26, 1993

Westinghouse Savannah River Company
Savannah River Site
Aiken, SC 29808

PURPOSE AND SCOPE

This report covers the WMQA assessment on the compliance of the twelve (12) special conditions that are part of the SCDHEC Partial Permit-to-Operate #17, 424-IW.

SUMMARY

This assessment of activities by WSRC organizations to meet the stated Permit-to-Operate #17, 424-IW has determined that WM is currently complying and measures are in place for continued compliance with the permit special conditions and commitments made in the permit application package.

AREAS ASSESSED

PERMIT SPECIAL CONDITIONS

1. The permittee shall maintain at each permitted facility a complete Operations and Maintenance Manual for the waste treatment system. The manual shall be made available for on-site review during normal working hours. The manual shall contain operation and maintenance instructions for all equipment and appurtenances associated with the waste treatment system. The manual shall contain a general description of the treatment process(es), operating characteristics that will produce maximum treatment efficiency and corrective action to be taken should operating difficulties be encountered.

STATUS: The WSRC Environmental Protection Department (EPD) has agreed that the WM operations procedures already in tickler files and operation manuals are adequate for Operations and Maintenance activities. The agreement is documented in WSRC Memorandum: ESH-FSS-93-0088, February 17, 1993, Hayes to Hunter, "Use of Waste Management Operating and Maintenance Procedures for the F/H High Level Waste Tank Farms (U)."

2. The permittee shall provide for the performance of routine daily treatment plant inspections by a certified operator of the appropriate grade. The inspections shall include, but are not limited to, areas which require a visual observation to determine efficient operations and for which immediate corrective measures can be taken using the O & M manual as a guide. All inspections shall be recorded and shall include the date, time, and name of person making the inspection, corrective measures taken, and routine equipment maintenance, repair, or replacement performed. The permittee shall maintain all records of inspections at the permitted facility and the records shall be made available for on-site review during normal working hours.

STATUS: All operators have or will pass their Level D Certification Test. In turn, these Level D operators shall perform stipulated inspections. The inspection procedures to be used are identified in WSRC Memorandum: WER-HLE-921226, Rev 1, November 30, 1992, Hunter to Bradley, "RCRA Inspection Procedures Matrix (U), Rev 1."

3. The permittee shall develop and implement a Best Management Practices (BMP) plan to identify and control the discharge of significant amounts of oils and the hazardous and toxic substances listed in 40 CFR Part 117 and Tables II and III of Appendix D to 40 CFR Part 122.

The plan shall include a listing of all potential sources of spills or leaks of these materials, a method for containment, a description of training, inspection, and security procedures, and emergency response measures to be taken in the event of a discharge to surface waters or plans and/or procedures which constitute an equivalent BMP. Sources of such discharges may include materials storage areas; in-plant transfer, process and material handling areas; loading and unloading operations; plant site runoff; and sludge and waste disposal areas. The BMP plan shall be developed, and updated as necessary, in accordance with good engineering practices, shall be documented in narrative form, and shall include any necessary plot plans, drawings, maps. The BMP plan shall be developed no later than six months after issuance of the final permit (or modification), shall be implemented no later than one year after issuance of the final permit (or modification). A Spill Prevention Control and Countermeasure (SPCC) plan may be used in lieu of a BMP plan if BMP requirements are satisfied. The BMP plan or its equivalent shall be maintained at the plant site and shall be available for inspection by EPA and Department Personnel.

STATUS: The WSRC Site Best Management Practice Manual, IM-90-49, is being used to meet this condition. Additionally, the EPD is coordinating the six (6) month update of this manual, to be accomplished by 9/3/93. The update will include the In-Tank Precipitation cold feeds area and any other applicable Tank Farm facilities that are not included in the current revision of the BMP Manual.

4. No chemicals (process or otherwise) shall be added to the waste tanks which will alter the composition of the F/H ETF effluent from that which was evaluated for the NPDES permit.

STATUS: Control measures for this permit condition are implemented by the use of WM procedures WM-EC-8000, "Environmental Compliance Review and Checklist (U)," and WM-EC-8002, "Implementation of the NEPA procedures within WM Facilities (U)."

5. The addition (not replacement) of new piping and chemical feed systems, even though related to the F/H Tank Farm process, shall not be considered normal operation if the piping and/or feed systems are to be located outside the tank farm boundary.

STATUS: This permit condition is controlled through the use of WM procedures WM-EC-8000, and 8002, and is identified in WM Technical Specifications.

6. Once waste removal begins on a tank with a leak or crack and the waste is removed to a level below the lowest known leak or crack, that level shall become the maximum operating level of the tank and shall not be exceeded unless the exceedance is a temporary result of the waste removal process.

STATUS: This permit condition requirement is addressed in Technical Standard(s) controlled by Mike Rea, H-Tank Farm, Cognizant Engineer.

7. No tank that leaks or has leaked shall be used for waste receipt without prior approval from this Department. This condition does not apply to the necessary addition of waste for waste removal purposes. Also, this condition does not apply to the use of tank 13, the 242-H evaporator feed tank, provided the construction and utilization of the replacement evaporator, 242-25H, and its associated feed tank do not deviate significantly from the State approved schedule. Any schedule changes must be approved by this office.

STATUS: This condition is addressed in WM Transfer Procedure 241-FH-7TQ and used in concert with construction schedules implements the control measures necessary for this condition.

8. Within 60 days from the effective date of this permit the Permittee shall submit to this office a report containing the QA/QC procedures followed during the installation of the liner extension within the ITP hold tank area.

STATUS: A copy of the QA/QC procedures implemented for the installation of the liner have been provided to SCDHEC by WSRC Memorandum: ESH-FSS-93-0137, March 18, 1993, Dunway to Richardson, "QA/QC Procedures for Installation of Liner Extension Within the In-Tank Precipitation Hold Tank Area (U)".

9. The Permittee shall maintain contingency plans or emergency procedures in place to respond to any known emergency situation with the potential to negatively impact human health or the environment. The plans and/or procedures shall be updated as necessary to include new information or changing conditions.

STATUS: As stipulated in the EPD agreement memorandum, ESH-FSS-93-0089, February 17, 1993, Hayes to Hunter, "Use of the Emergency Preparedness Plan for the F/H High Level Waste Tank Farms (U)," the Comprehensive Emergency Preparedness

Plan (CEPP) is determined adequate for compliance to this condition.

10. On June 30, 1987, the permittee submitted a revised RCRA Part A permit application which included the high-level radioactive waste tank system(s) contained in this permit. After this office issues the wastewater construction and operating permits for this facility, the permittee should amend its RCRA Part A permit to delete the tank system(s).

STATUS: This change to the RCRA Part A Permit has been accomplished and provided to SCDHEC in WSRC Memorandum: ESH-FSS-93-0149, February 23, 1993, Hunter to Gould, "Resource Conservation and Recovery Act (RCRA) Part A Permit Application, Revise Sanitary Landfill - Submittal of Draft Revision (U)."

11. Based on a review of the Tank Assessment Report, submitted as a requirement of the Federal Facilities Agreement (FFA), Section IA, this office has determined that the Type I tanks identified as tanks 2-8 are approvable as equivalent devices for secondary containment. The Type I tanks, however, should only be used for waste receipt when there is no suitably available volume in an approved Type III tank. Furthermore, if any Type I tank develops a leak which exceeds the capacity of the 5-foot deep secondary containment pan, this approval shall be rescinded, and no additional waste shall be directed to these Type I tanks.

STATUS: The condition is controlled by WM Engineering issuance of monthly "Tickler" procedures controlled by J. E. Griffiths, F-Tank Farm, Cognizant Engineer.

12. This permit is being issued after review and approval of a construction permit application submitted to the State of South Carolina pursuant to the requirements of a Federal Facilities Agreement (FFA) entered into by the United States Department of Energy (the permittee), the United States Environmental Protection Agency, and The State of South Carolina on January 15, 1993. In addition to the conditions specifically stated in this permit the permittee shall be subject to all applicable requirements of Section IX, including referenced appendices, of the FFA.

STATUS: The requirements of the FFA Section IX and appendices is implemented by the issuance of the WM approved procedures whereby work activities associated with this condition are addressed and managed in a controlled manner.

W-0517

Westinghouse
Savannah River Company

P.O. Box 616
Aiken, SC 29802

ESH-ESS-93-0196

April 5, 1993

Ms. M. C. Reece, District Director
Lower Savannah District Office
South Carolina Department of Health
and Environmental Control
218 Beaufort Street, NE
Aiken, SC 29801

Dear Ms. Reece:

CERTIFIED OPERATORS-IN-CHARGE FOR SAVANNAH RIVER SITE (SRS) WASTEWATER TREATMENT FACILITIES (U)

Regarding the agreement between the Department and SRS, and as required by Part II(C) of the SRS National Pollutant Discharge Elimination System permit, enclosed is one copy each of the subject form for the following facilities:

- **H-Area Tank Farm**
- **F-Area Tank Farm**
- **In-Tank Precipitation Facility (ITP)**
- **DWPF Transfer Lines**

A copy of these forms was provided to your staff at the final inspections. Questions may be directed to B. R. James (644-5746), SRS Operator Certification Coordinator, or W. L. Payne (725-9002) of my staff.

Yours very truly,

W. L. Payne for

J. L. Keyes, Manager
Surface Water, Wetlands, and Land Protection Group
Environmental Protection Department

WLP:cs
Enclosure

CC: R. W. Sherer, SCDHEC-Columbia
A. G. Linton, EPA Region IV
W. R. Moore, SC Environmental Certification Board
A. B. Gould, DOE-ECD, 703-41A

2

Ms. M. C. Reece
ESH-ESG-93-0196
April 5, 1993

BCC: H. L. Davis, 703-41A
C. B. Stevens, 742-6G
K. Z. Wolf, 704-15S
L. S. Coward, 703-18A
W. L. Payne, 742-A
B. R. James, CCC-2, Room 221
T. H. Lee, 241-28H
J. E. Murdaugh, 241-102F
T. K. Bragg, 241-82H
D. B. Gleaton, 210-S
Records Administration, 773-52A
EPD File, 742-A

W-0517

3

Westinghouse
Savannah River Company

P. O. Box 616
Aiken, SC 29802

Environmental Quality Control Office
Lower Savannah District
218 Beaufort Street, N. E.
Aiken, South Carolina 29801

Wastewater Treatment Facility

PERMIT NO. #17,424 - IW
PLANT SRS H-Area Tank Farm
OWNER U. S. Department Of Energy
COUNTY Aiken, SC

The operator-in-charge of the above described plant will be Ted H. Lee who holds a valid A-Level Physical/Chemical (#22) treatment certification issued by the South Carolina Environmental Certification Board.

The plant will be operated in compliance with all State of South Carolina rules and regulations for Wastewater Treatment Facilities, and with all other operating and NPDES permit conditions.

In case of an emergency during non-working hours, Ted H. Lee may be reached at the following location:

ADDRESS	PHONE
Route 8 Box 206, Sylvania, GA 30467	(912) 863-3861

Should the operator in charge of this plant change for any reason, Westinghouse Savannah River Company will notify the Lower Savannah District Environmental Quality Control Office and the Board of Certification in writing. This individual has been informed that failure to properly carry out his/her duties as operator will result in the Environmental Quality Control Office requesting appropriate action by the South Carolina Environmental Certification Board, which could result in the revocation or suspension of his/her license.

M. D. Dukes, Manager
Environmental Support Section
Environmental Protection Department

DATE: 2/16/93

W-0517 4

Westinghouse
Savannah River Company

P. O. Box 616
Aiken, SC 29802

Environmental Quality Control Office
Lower Savannah District
218 Beaufort Street, N. E.
Aiken, South Carolina 29801

Wastewater Treatment Facility

PERMIT NO. #17,424 - IW
PLANT SRS F-Area Tank Farm
OWNER U. S. Department Of Energy
COUNTY Aiken, SC

The operator-in-charge of the above described plant will be J. E. Murdaugh who holds a valid A-Level Physical/Chemical (#1014) treatment certification issued by the South Carolina Environmental Certification Board.

The plant will be operated in compliance with all State of South Carolina rules and regulations for Wastewater Treatment Facilities, and with all other operating and NPDES permit conditions.

In case of an emergency during non-working hours, J. E. Murdaugh may be reached at the following location:

ADDRESS	PHONE
157 Rolling Rock Road, Aiken, SC 29803	(803) 648-8925

Should the operator in charge of this plant change for any reason, Westinghouse Savannah River Company will notify the Lower Savannah District Environmental Quality Control Office and the Board of Certification in writing. This individual has been informed that failure to properly carry out his/her duties as operator will result in the Environmental Quality Control Office requesting appropriate action by the South Carolina Environmental Certification Board, which could result in the revocation or suspension of his/her license.

M D Dukes

M. D. Dukes, Manager
Environmental Support Section
Environmental Protection Department

DATE: 2/18/93

W-05176

Westinghouse
Savannah River Company

P. O. Box 616
Aiken, SC 29802

Environmental Quality Control Office
Lower Savannah District
218 Beaufort Street, N. E.
Aiken, South Carolina 29801

Wastewater Treatment Facility

PERMIT NO. #17,424 - IW
PLANT SRS ITP Facility
OWNER U. S. Department Of Energy
COUNTY Aiken, SC

The operator-in-charge of the above described plant will be T. K. Bragg who holds a valid A-Level Physical/Chemical (#1421) treatment certification issued by the South Carolina Environmental Certification Board.

The plant will be operated in compliance with all State of South Carolina rules and regulations for Wastewater Treatment Facilities, and with all other operating and NPDES permit conditions.

In case of an emergency during non-working hours, T. K. Bragg may be reached at the following location:

ADDRESS	PHONE
Route 1 Box 132, Sylvania, GA 30467	(912) 829-4626

Should the operator in charge of this plant change for any reason, Westinghouse Savannah River Company will notify the Lower Savannah District Environmental Quality Control Office and the Board of Certification in writing. This individual has been informed that failure to properly carry out his/her duties as operator will result in the Environmental Quality Control Office requesting appropriate action by the South Carolina Environmental Certification Board, which could result in the revocation or suspension of his/her license.

M. D. Dukes

M. D. Dukes, Manager
Environmental Support Section
Environmental Protection Department

DATE: 2/16/93

W-0517

Westinghouse
Savannah River Company

P. O. Box 616
Aiken, SC 29802

Environmental Quality Control Office
Lower Savannah District
218 Beaufort Street, N. E.
Aiken, South Carolina 29801

Ref:

Wastewater Treatment Facility

PERMIT	17424-IW , DWPF TRANSFER LINES
PLANT	SRS-DWPF VITRIFICATION FACILITY
OWNER	U. S. DEPARTMENT OF ENERGY
COUNTY	AIKEN, SC

The operator-in-charge of the above described plant will be Debbie B. Gleaton who holds a valid "B" PHYSICAL/CHEMICAL WASTEWATER treatment certification issued by the South Carolina Environmental Certification Board.

The plant will be operated in compliance with all State of South Carolina rules and regulations for Wastewater Treatment Facilities, and with all other operating and NPDES permit conditions.

In case of an emergency during non-working hours, Debbie B. Gleaton may be reached at the following location:

ADDRESS	**PHONE**
Rt. 2, BOX 88B Williston, SC.	(803)266-3909 (Beeper # 2563)

Should the operator in charge of this plant change for any reason, Westinghouse Savannah River Company will notify the Lower Savannah District Environmental Quality Control Office and the Board of Certification in writing. This individual has been informed that failure to properly carry out his/her duties as operator will result in the Environmental Quality Control Office requesting appropriate action by the South Carolina Environmental Certification Board, which could result in the revocation or suspension of his/her license.

DATE: 2/25/93

M. D. Dukes, Manager
Environmental Support Section
Environmental Protection Department

W-0517
I-0139

Westinghouse
Savannah River Company

P.O. Box 616
Aiken, SC 29802

ESH-FSG-93-0252

April 1, 1993

Mr. D. E. Wilson, Jr., P. E., Manager (2)
Hazardous & Infectious Waste Management Division
Bureau of Solid and Hazardous Waste Management
South Carolina Department of Health and
Environmental Control
2600 Bull Street
Columbia, SC 29201

Dear Mr. Wilson:

RESOURCE CONSERVATION RECOVERY ACT (RCRA) PART A PERMIT MODIFICATION REVISION NUMBER 10, DATED 3/31/93 MODIFY SANITARY LANDFILL-DELETE F/H AREA TANK FARM UNITS (U)

Ref.: Letter, H. W. Truesdale to S. R. Wright, 6/31/89

Enclosed for your review and approval is a copy of the revised pages associated with the revision 10 modification of the Part A Permit Application dated March 31, 1993. This revision includes the following noteworthy changes:

- Revised the description of the Sanitary Landfill to include the northern portion of the Southern Sector, thus making the facility one contiguous unit.
- Revised the capacity of the Sanitary Landfill to agree with the Part B being issued on 3/31/93 also.
- Deleted the F/H Tank Farms (which the Savannah River Site had added to the Part A in 1987 as a protective filing) from Interim Status as you requested in the referenced letter. These two facilities obtained their industrial waste water operating permit on 3/3/93 and are now managed under the Clean Water Act.

Also attached are revision instructions together with the latest revision index for incorporating the revised pages into the existing Part A Permit Application. Please note that changes have been denoted by the use of sidebars, bolding, or circling.

Please review and approve this request as soon as possible. If there are any questions, please call W. Maloney at (803) 725-1086.

Yours very truly,

J. V. Odum, Manager
Facility Support Section
Environmental Protection Department

WJM:sam
Enclosure

CC: G. A. Farmer, EPA-IV, (w/ attach)
M. C. Reece, SCDHEC-Aiken, (w/ 1 attach)
A. B. Gould, DOE-SR (concur) (w/ 1 attach)

Letter, D. E. Wilson from J. V. Odum
ESH-FSS-93-0252, April 1, 1993

3

BCC: K. I. Taimi, DOE-HQ, (EH-22)
W. Nobles, DOE-HQ, (EM-321), (w/ 1 attach)
B. Connell, DOE-HQ, (DP-636), (w/ 1 attach)
M. G. O'Rear, DOE-SR, 703-A, (concur) (w/ 1 attach)
L. C. Goidell, DOE-SR, 703-A, (concur) (w/ 1 attach)
P. Prater, DOE-SR, 703-41A, (w/ 1 attach)
J. Bolen, DOE-SR, 703-41A, (w/ 1 attach)
G. C. DeCamp, NUS, (w/ 1 attach)
J. S. Roberts, 742-A
J. V. Odum, 742-A
M. A. Ebra, CCC-4
J. W. Cook, 742-A
S. J. Carroll, 742-A
K. Wierzbicki, 742-G
C. Stevens, 742-6G, (w/ attachment)
B. DeWitt, 742-6G, (w/ partial attachment)
W. J. Maloney, 742-A, (w/ 1 attach)
D. V. Osteen, 742-A
A. Suer, CCC-4, (w/ 1 attach)
C. L. Bergren, CCC-4
D. Dunaway, 703-18A
C. Hayes, 703-18A
A. Van Brackle, 742-A, (w/ 1 attach)
N. D. Ferguson, 742-A, (w/ 1 attach)
K. A. Wolfe, 703-H, (w/ 1 attach)
S. Carroll, 742-A, (w/ attachment)
C. Amacher, 742-A
G. Barnes, CCC-3
P. D. d'Entremont, 703-H
D. M. Blue, 742-G
R. L. Fanning, 742-A
T. P. Gaughan, 241-152H
EPD files, 742-A
EPD RCRA Files, 742-A, (w/ 1 attach)
Records Administration, 773-52A, (w/ 1 attach)

W-0517

INTER-OFFICE MEMORANDUM
Savannah River Site

Date: 24-Mar-1993 10:15am EST
From: Douglas M. Blue
BLUE-DM-L4808 AT A1 AT SASRS2
Dept: WMRC
Tel No: 70520

TO: See Below

Subject: Certified Operator Coverage

Per our telephone conversation on March 23, 1993, EPD (Bill Payne) was contacted regarding the required "A" level operator coverage for the F and H-Area Tank Farms under the South Carolina Industrial Wastewater Permit to Operate #17,424 - IW. Contained in the letter sent to the South Carolina Environmental Certification Board, Ref: J.L. Keyes to L.E. Arrington and W.R. Moore, February 22, 1993, SRS committed to providing at least one A-level operator in one of the three areas (H Tank Farm, F Tank Farm, or ITP), each shift, until full coverage can be established.

Arrangements must be made to provide for operator coverage as outlined in the February 22nd letter. HLWO should make every effort to avoid lapses in operator coverage as specified above. In the event that coverage cannot be realized (i.e. unexpected illness) and HLWO has made a good faith effort in providing coverage, notification should be made to the OICs that an "A" level operator was unavailable during the specified shift. Furthermore, the OICs should note the lapse of coverage in the OIC logbook during the next routine signing. Notification to the OICs is not required, if a substitution/coverage can be provided with the appropriate grade. It is HLWO responsibility to assure that the OICs are notified of any lapses in operator coverage. It is WMRC's understanding that an aggressive certification program is under way to assure "A" level coverage on a shiftly basis in each facility by June 1994.

If you have any questions regarding the contents herein, please do not hesitate to contact me at the above number.

Distribution:

TO:	WALTER A. WILSON	(WILSON-WA-O5215 @A1@SLSRP1)
CC:	Matthew A. Hunter	(HUNTER-MA-L2335 AT A1 AT SASRS2)
CC:	Chuck Hayes	(HAYES-CR-Z9722 @A1@SLSRP1)
CC:	Bill Payne	(PAYNE-WL-Y7708 @A1@SLSRP1)
CC:	Kim S. Wierzbicki	(WIERZBICKI-KS-O6535 AT A1 AT SASRS2)
CC:	CARY B. STEVENS	(STEVENS-CB-O5981 AT A1 AT SASRS2)
CC:	Dot Matthews	(MATTHEWS-DL-W0643 AT A1 AT SASRS2)

Westinghouse
Savannah River Company

P.O. Box 616
Aiken, SC 29802

ESH-FSS-93-0137

March 18, 1993

Mr. C. W. Richardson, Manager
Federal/Energy/Pretreatment Section
Industrial and Agricultural Wastewater Division
South Carolina Department of Health
and Environmental Control
2600 Bull Street
Columbia, South Carolina 29201

Dear Mr. Richardson:

QA/QC PROCEDURES FOR INSTALLATION OF LINER EXTENSION WITHIN THE IN-TANK PRECIPITATION HOLD TANK AREA (U)

Ref.: Construction Permit #17424-IW, Special Condition #8

Attached per the referenced special condition is the Quality Assurance / Quality Control (QA/QC) package containing procedures followed during installation of the liner extension within the In-tank Precipitation Hold Tank Area. The package is divided into three parts. Attachment A contains vendor specification sheets for coatings and grout used. Included in Attachment B are field inspection reports and records which verified that the installation was performed within appropriate design parameters. Actual QA/QC procedures followed during the liner installation are included in Attachment C.

This matter has been discussed between Larry Arrington and Chuck Hayes. If there are any questions, please contact Mr. Hayes (725-8838).

Yours very truly,

W D Dunaway

W. D. Dunaway, Manager
Permitting Field Support Group
Environmental Protection Department

CRH:pr
Attachment

CC: M. C. Reece, SCDHEC, Lower Savannah District *
L. E. Arrington, SCDHEC, Columbia
A. B. Gould, 703-41A (2) *

* - w/ attachment

ATTACHMENT A

MASTERFLOW* 928 GROUT

High-precision, nonshrink, natural-aggregate grout

DESCRIPTION:

MASTERFLOW 928 grout is specially formulated for use at any consistency—from fluid to damp-pack—for grouting machines or plates requiring precision-bearing support. This ready-to-use product meets the volume change and exceeds the compressive strength requirements of CRD-C 621, Corps of Engineers Specification for Nonshrink Grout.

RECOMMENDED FOR:

- Precision grouting of equipment and machinery, baseplates, soleplates and columns.
- Grouting applications where shrinkage must be eliminated and where a high-strength grout, similar in appearance to concrete and mortar, is desired.
- Applications where high, one-day and later-age compressive strengths are required.
- Nonshrink grouting of precast wall panels, beams and columns, curtain walls, concrete systems, and other structural and nonstructural building members.
- Repairs to concrete, such as filling rock pockets and large cracks.
- Anchoring bolts, reinforcing bars and rods.
- Applications calling for a grout to be pumped.

FEATURES/ BENEFITS:

- Hardens free of bleeding, settlement or shrinkage when mixed, placed and cured at almost any consistency—fluid (25 seconds or more), flowable, plastic or damp-pack.
- Exhibits workability greater than previously seen with other grouts at a given flow consistency—when in the 100°F (38°C) range, MASTERFLOW 928 grout maintains good workability for more than 30 minutes.
- Can be used at temperatures ranging from over 100°F (38°C) to as low as 40°F (4°C) when mixing and placing recommendations are followed.
- Contains carefully graded, high-quality quartz aggregate for optimum strength and workability.

PACKAGING:

MASTERFLOW 928 grout is packaged in 55 lb (25 kg) moisture-resistant bags.

ESTIMATING:

One 55 lb (25 kg) bag of MASTERFLOW 928 grout mixed with 10.5 lb (4.8 kg) [1.26 U.S. gallon (4.8 litre)] of water produces approximately 0.50 ft³ (0.014 m³) of grout.

NOTE: MASTERFLOW 928 grout should be mixed with a mechanical mixer for at least 5 to 6 minutes. More or less water may be required when mixing to a 25 second flow. The amount of water needed depends on mixing efficiency and other variables.

TYPICAL COMPRESSIVE STRENGTHS:

	CONSISTENCY					
	Plastic[1]		Flowable[2]		Fluid[3]	
	psi	MPa	psi	MPa	psi	MPa
1-day	3,500	24	[illegible]	[illegible]	[illegible]	17
3-day	[illegible]	[illegible]	[illegible]	[illegible]	4,500	31
7-day	[illegible]	48	6,200	43	6,000	41
28-day	8,500	59	7,500	52	7,000	48

[1] 100% flow on flow table, ASTM C 230, 5 drops in 3 seconds.
[2] 135% flow on flow table, ASTM C 230, 5 drops in 3 seconds.
[3] 25 to 30 second flow by corps of Engineers Flow cone Method, CRD-C 611.

INFORMATION ONLY

NOTE: The data shown are based on controlled laboratory tests. Reasonable variations from the results shown above can be expected. Field and laboratory tests should be controlled on the basis of the desired placing consistency rather than strictly on the water content. However, it is recommended that the flow should not be less than 25 seconds, Flow Cone Method, CRD-C 611.

If the work requires that strength tests be made at the jobsite, use 2" (50 mm) cube molds. Do not use cylinder molds. Consult your local Master Builders representative for special procedures required when mixing and casting cubes of fluid, nonshrink grout for compressive strength tests.

PRECAUTIONS:

- When the placing temperature of the mixed grout is below 50°F (10°C) or if the environment into which the mixed grout is to be placed is below 50°F (10°C), MASTERFLOW 928 grout should not be mixed with more than 10.5 lb (4.8 kg) [1.26 U.S. gallon (4.8 litre)] of water per 55 lb (25 kg) bag of dry grout.
- The mixed temperature of the grout should be in the range of 40°F to 100°F (4°C to 38°C).

  Do not use water in an amount or at a temperature that will produce a flow of less than 25 seconds (CRD-C 611) or cause the mixed grout to bleed or segregate. Special information on high and low temperature placing techniques is available from your local Master Builders representative.
- When the grout will be in contact with steel which is or will be stressed over 80 000 psi (552 MPa) use Masterflow* 814 or 816 cable grout.

INFORMATION ONLY

NOTE: For even greater impact resistance—a desirable property in grout subjected to severe, dynamic operating forces and repetitive loading—use metallic-reinforced, non-catalyzed Embeco* 885 or Embeco* 636 grout. Applications which would require such resistance include crane rail plates, heavy presses and steel and aluminum rolling mills.

For additional information on MASTERFLOW 928 grout or on other time tested, high-quality grouting materials

FLAKELINE® 222G

Catalyzed graphite filled vinyl ester coating

"INFORMATION ONLY"

GENERIC TYPE:

Catalyzed vinyl ester resin system with graphite filler.

DESCRIPTION:

CeilGard FLAKELINE 222G is a graphite filler catalyzed vinyl ester system which exhibits excellent resistance to both aliphatic and aromatic organic solvents, organic and inorganic acids. It shows partially good resistance to hydrofluoric acid.

RECOMMENDED USES:

Intermediate lining for use in immersion conditions up to 130°F (54°C) where severe corrosive environments exist.

USE IN CONJUNCTION WITH:

Used with P-370 Primer for metal surfaces.

SURFACE:

All metal surfaces with proper surface preparation.

RESISTANCE:

Outstanding solvent resistance, organic and inorganic acid resistance, excellent resistance to various concentrations of hydrofluoric acid.

PROPERTIES OF CURED FILM:

Tensile Bond Strength—500-2,000 psi (3.4-14 MPa)
Flexural Strength—3,500-4,000 psi (24-28 MPa) (ASTM-D790)
Flexural Modulus—0.5-0.7 × 10^6 psi (3.5-4.8 GPa)
Moisture Permeability—0.002 perm in. (0.005 Perm cm.) (ASTM E96 Proc. E)
Tensile Strength—2,500-3,500 psi (17-24 MPA) (ASTM D-638)
Tensile Elongation—0.3-0.5%

PRODUCT DATA:

Color—Dark Gray
Density (wt. per gal.)—10.0 ± 0.2 lbs/gal
Viscosity—3,500-4,000 cps @ 77°F
Flash Point (Pensky Martens Closed Cup)—89°F (32°C)
V.O.C. (Volatile Organic Compounds)—0.12 lbs/gal (Lab 23 method of Reg. 8-4-111 of California Code)
Shelf Life—Shelf life is 2 months at 70-80°F; 30 days or less at 80-90°F. Expiration dates printed on labels.
Pot Life—100 min. @ 50°F; 60 min. @ 75°F; 45 min. @ 90°F
Temperature Resistance—350°F continuous dry; 130°F immersion

SURFACE PREPARATION:

For immersion or intermittent splash and spillage conditions sandblast to "White Metal" in accordance with: Steel Structures Printing Council Specifications SP-5-63 or NACE Specifications #1. For fumes and dry environments sandblast to "near white" in accordance with SP-10-63 or NACE #2. Minimum surface profile of 3.0 mils is required.

APPLICATION:

Spray application is recommended. Small areas may be coated by brush or roller.

NUMBER OF COATS AND THICKNESS:

Two coats at 20-26 wet mils each will yield total DFT of 30-40 mils.

COVERAGE:

Actual coverage is 25-30 ft²/gal. @ 35 mils which incluces approximately 20% loss due to waste and overspray.

THINNING:

None required. DO NOT THIN.

RECOAT & CURING TIME:

	Recoat Time	Cure Time
@ 50°F	12 hrs.	48 hrs.
@ 75°F	4 hrs.	24 hrs.
@ 90°F	3 hrs.	16 hrs.

RECOATABILITY:

FLAKELINE 222G must be recoated within 7 days when shaded from sunlight. If the coating is applied in sunlight (even on cloudy days) it must be recoated within 4 hours to obtain proper intercoat adhesion.

"INFORMATION ONLY"

MIXING:

Stir thoroughly, then add 3.0 oz. of Hardener No. 2C per gal. of 222G liquid.

APPLICATION EQUIPMENT:

Use air spray or low pressure (4:1 or 8:1) pump. Airless spray equipment is normally not recommended. When rolling or brushing three coats will be required to achieve recommended film thicknesses. For complete details refer to Bulletin CG200 and Bulletin C-20 (refers to Flakeline 222HT/222G).

CLEAN UP:

Use T-410 Solvent, methyl ethyl ketone or lacquer thinner. DO NOT USE ACETONE SOLVENT.

PACKAGING:

Available in 3/4 gallon and 4 gallon units. Hardener (catalyst) is included in the material price with approx. 3.0 oz. of hardener per gallon of material in separate containers.

STORAGE:

Store in a cool, dry place away from fire hazards.

Due to the limited shelf life Master Builders will not warranty the shelf life of FLAKELINE 222G and will not accept return of this material.

SAFETY:

FLAKELINE 222G contains vinyl ester resins, styrene monomer and inert flake glass filler. The hardener is an organic peroxide. The product's components have been formulated to optimize physical lining characterics while minimizing hazardous physical and health factors encountered during application. A concerned effort is made to be aware of the latest chemical toxicological information and to apply this knowledge in a responsible manner to insure product safety.

During application of FLAKELINE 222G materials, always wear gloves and appropriate work clothing to minimize contact. Ventilation is required with special consideration for enclosed or confined area. Air movement must be designed to insure turnover at all locations in work area and adjacent areas to avoid buildup of heavy vapors. Use caution when handling flammable liquids, eliminate sources of ignition from work area, and containers with residues.

Observe safe storage practices by separating resins from hardeners, by keeping solvents and hardeners in a cool area free of sources of ignitions, and by observing a special warning on RED and YELLOW labeled products. The RED labels represent amine-type chemicals and the YELLOW labels represent organic peroxide-type chemical which should not be stored adjacent or mixed together because of the possible violent reaction between them.

Product Material Safety Data Sheets and Installation Bulletins are available and should be consulted when handling products. These products are for industrial and professional use only; application directions must be followed.

"INFORMATION ONLY"

"INFORMATION ONLY"

Master Builders
23700 Chagrin Blvd.
Cleveland, OH 44122
3637 Weston Rd.
Toronto, ONT M9L 1W1

Master Builders Technologies

©1969, Master Builders

Form Cel-21
Printed in U.S.A. 289

FLAKELINE® 600

Amine adduct cured epoxy

DESCRIPTION:

FLAKELINE 600 is a two-component, high build (6-8 mils/coat) flake filled epoxy topcoat providing improved chemical resistance to alkalis, inorganic acids and many aromatic and aliphatic solvents. Unique curing systems allow application at temperatures well below freezing.

RECOMMENDED USES:

For corrosion protection in chemical fumes, spillage or marine environments. Recommended for structural steel, piping, tanks or equipment in chemical, paper, marine and petroleum facilities. May also be used as a light duty lining in water or mild chemical solutions at ambient temperatures.

USE IN CONJUNCTION WITH:

Used with Flakeprime 675 Epoxy Primer.

GENERIC TYPE

Amine adduct epoxy

SURFACE:

Apply over Flakeprime 675. May be used as self-priming single coat system in mild to moderate corrosive atmospheres.

RESISTANCE:

Resistant to alkalis, inorganic acids, chemical fumes, solvents and fresh and salt water immersion.

PRODUCT DATA:

Colors—White and gray. Other standard colors available.
Density (wt per gal)—10.3 ±0.02 lbs
Solids Content—83% by volume
Viscosity—700 ± 200 cps mixed @ 77°F
Flash Point (Pensky-Martens Closed Cup)—Part A–35°F (2°C); Part B–210°F (99°C); Mixed–61°F (16°C)
Shelf Life—1 year at temperatures below 90°F
Pot Life—8 hrs @ 25°F, 3 hrs @ 50°F, 2 hrs @ 75°F, 45 min @ 90°F
Temperature Resistance—350°F continuous dry; 120°F immersion, 160°F splash and spillage.

SURFACE PREPARATION:

Metal—For immersion or intermittent splash and spillage conditions sandblast to "White Metal" in accordance with Steel Structures Painting Council Specifications SP-5-63 or NACE Specification #1. For fumes and dry environments sandblast to "Near White" in accordance with SP-10-63 or NACE #2. A minimum surface profile of 3.0 mils is required.

Concrete—Previously coated or heavily contaminated surfaces should be sandblasted to provide a clean surface. New or uncontaminated horizontal surfaces may be prepared by etching with 1 part hydrocholoric acid to 2-3 parts water instead of sandblasting.

APPLICATION:

Airless, conventional, brush or roller.

NUMBER OF COATS AND THICKNESS:

One coat at 6 dry mils for chemical fumes or weathering. For direct spillage or immersion apply two coats at 6-8 mils per coat.

COVERAGE:

Theoretical coverage is 1,330 ft²/gal @ 1 mil DFT.

THINNING:

Generally not required. May use up to 4 oz of T-470 Solvent per gallon at temperatures below 70°F. Use T-460 solvent at temperatures above 70°F.

RECOAT & CURING TIME:

	Recoat Time	Cure Time
@ 25°F	48 hrs.	48-72 hrs.
@ 50°F	15 hrs.	18-24 hrs.
@ 75°F	4 hrs.	6-12 hrs.
@ 90°F	3 hrs.	4 hrs.

May be recoated up to 30 days. After 30 days, sand or sweep blast to remove gloss and roughen surface to proper adhesion.

MIXING:

Add Catalyst Part B into Resin Part A and mix thoroughly with mechanical agitation. Material will become much thinner when mixed. Add minimum quantities of solvent only if required. OBSERVE POT LIFE LIMITATIONS. If material thickens in pot, discard material and flush pot and lines.

APPLICATION EQUIPMENT:

AIR SPRAY—Use Binks 18 or 62 spray gun; minimum 3/8". I.D. fluid line with #66 (.070) fluid tip and needle with 63PJ or #63PB air cap. For high production spraying substitute #67 (.086) fluid tip and needle with 67PD air cap. Adjust fluid pressure to provide adequate material to spray gun and use minimum atomization pressure to break up and flow out with minimum overspray.

AIRLESS SPRAY—Minimum 28:1 ratio pump with 60 mesh filter recommended. A Spraying Systems 25-A Gunjet spray gun with Rotoclean tip and tungsten carbide orifices of 0.017-0.026"; and 25-60° fan angle is recommended. Adjust material pressure between 1,200-2,500 psi as required.

CLEAN UP:

Use T-410 Solvent, methyl ethyl ketone or lacquer thinner.

PACKAGING:

Available in 1 gal and 5 gal units.

STORAGE:

Store in a cool, dry place away from fire hazards.

"INFORMATION ONLY"
"INFORMATION ONLY"
"INFORMATION ONLY"

SAFETY:

FLAKELINE 600 contains epoxy resins, polyamide catalyst and aromatic solvent. The product's components have been formulated to optimize physical characteristics such as filling capacity, abrasion, moisture and chemical resistance while minimizing hazardous physical and health factors encountered during application. A concerned effort is made to be aware of the latest chemical toxicological information and to apply this knowledge in a responsible manner to insure product safety.

During application of FLAKELINE 600 materials always wear gloves and appropriate work clothing to minimize contact. Ventilation is required with special consideration for enclosed or confined area. Air movement must be designed to insure turnover at all locations in work area and adjacent areas to avoid buildup of heavy vapors. Use caution when handling flammable liquids, eliminate sources of ignition from work area, and containers with residues.

Observe safe storage practices by separating resins from hardeners, by keeping solvents in a cool area free of sources of ignitions.

Product Material Safety Data Sheets and Installation Bulletins are available and should be consulted when handling products. These products are for industrial and professional use only; application directions must be followed.

"INFORMATION

"INFORMATION ONLY"

"INFORMATION ONLY"

Master Builders
23700 Chagrin Blvd.
Cleveland, OH 44122
3637 Weston Rd.
Toronto, ONT M9L 1W1

Master Builders Technologies

©1989, Master Builders

Form Cel-29
Printed in U.S.A. 289

ATTACHMENT B

Section B

ASR 36-15 (10-16-90)
File ID CMP 10-1.1-2
Page 1 of 1

Field Inspection Report

1. WP No. 92-WPJ-HM010

IR Log No. M030027

2. Page 1 of 3

1a. IR No. 92IR15-H3781-4409-W802521-0001

3. Prepared By [signature] Date 2-13-92

4. Reviewed By [signature] Date 2-13-92

5. Item Inspected
LINER & EXTENSION (SEE PG. 3 OF 4)

"INFORMATION ONLY"

6. Location
241-96H (HOLD TANK ROOM)

"INFORMATION ONLY"

7. Inspection(s)

		C	E	ITEM(S) ACCEPTANCE CODE/DATE	IQCE/DATE
1.0	PREREQUISITES				
1.1	VERIFY REFERENCE CRITERIA IS CORRECT COMPLETE AND DRAWINGS REVISIONS ARE CURRENT.	R		ZP 4-16-92	
1.2	REVIEW FOR ANY OPEN NCRs THAT MAY AFFECT SCOPE OF WORK	R		ZP 4-16-92	
2.0	IN-PROCESS INSPECTION ACTIVITIES				
2.1	VERIFY PROPER MATERIALS UTILIZED	I		ZP 4-16-92	

8. Inspection Equipment Used
N-A

"INFORMATION ONLY"

9. Standard/Code/Procedure/Drawing/Specification
W802521 REV. 2 & DCF #V-20097-R
TURNBACK #3781-265

10. Results of Inspection 4-16-92 [signature] ☑ No Open Exceptions ☐ Open Exceptions

11. Remarks
DESIGN CLASSIFICATION TO BE "CP".

12. Inspection Complete [signature] Date 4-16-92

13. Complete Inspection Record Reviewed and Accepted By [signature] Date

ASR 36-13A (10-16-90)
File ID CMP 10-1.1-3
Page 1 of 1

Field Inspection Report Continuation Sheet

1. IR No. LOG # M030027

2. Page 2 of 3

3. Continuation of Block No.

		C	E	ITEM(S) ACCEPTANCE CDE/DATE	QCE/DATE
2.0	IN-PROCESS INSPECTION ACTIVITIES				
3.0	FINAL INSPECTION ACTIVITIES				
3.1	VERIFY FINAL CONFIGURATION ARE AS PER DESIGN.	I		RHP 4-16-92	
	VERIFY ANCHOR BOLT I.R. HAS BEEN COMPLETED.				
3.2	I.R. # 92IR5-H3781-4403-J802521-0001	R		RHP 4-16-92	
	VERIFY TOUCH-UP I.R. HAS BEEN COMPLETED.				
3.3	I.R. # 92IR5-H3781-4404-J802521-0001	R		RHP 4-16-92	
	VERIFY WELDING I.R. HAS BEEN COMPLETED.				
3.4	I.R. # 92IR5-H3781-4404-J802521-0001	R		RHP 4-16-92	

"INFORMATION ONLY"

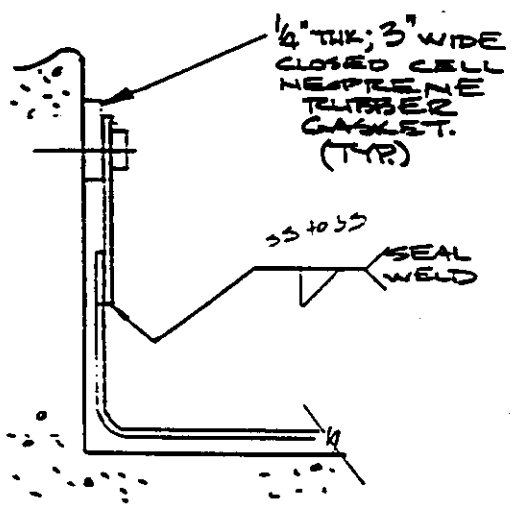

SECTION A

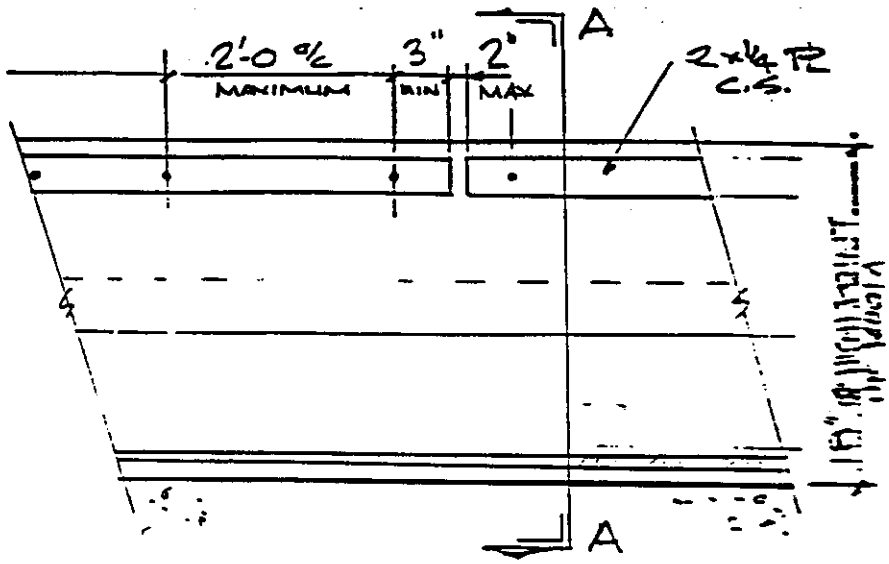

TYPICAL LINER PL EXTENSION

"INFORMATION ONLY"

NOTES:

1) INDEPENDANT VERIFICATION IS NOT REQUIRED.
2) MATERIAL FOR EXTENSION OF LINER PL SHALL BE ASTM A240 304L ; 11 GA S.S.
3) SEAL WELDS SHALL BE PT'd IN ACCORDANCE WITH SITE STD PT (SR) - AWS, WITH ACCEPTANCE CRITERIA PER SECTION 9.2. VISUAL EXAMINATION PER CONST. INST. SPEC W-SPC-G-00029.
4) PAINT SYSTEM FOR C.S ITEMS SHALL BE SPEC 9454 SYSTEM S-211. TOUCH-UP SHALL BE S-207.
5) ANCHORS SHALL BE 3/8" ϕ HILTI-II'S INSTALLED IN ACCORDANCE WITH C-SPG-G-00045 STD EMBEDMENT.

"INFORMATION ONLY"

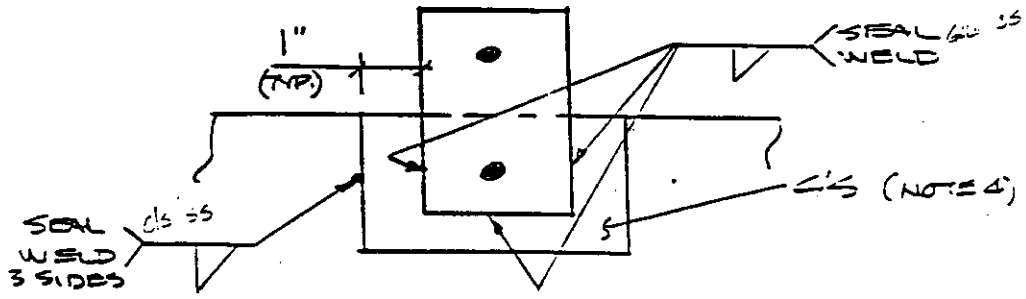

LINER @ OBSTRUCTIONS

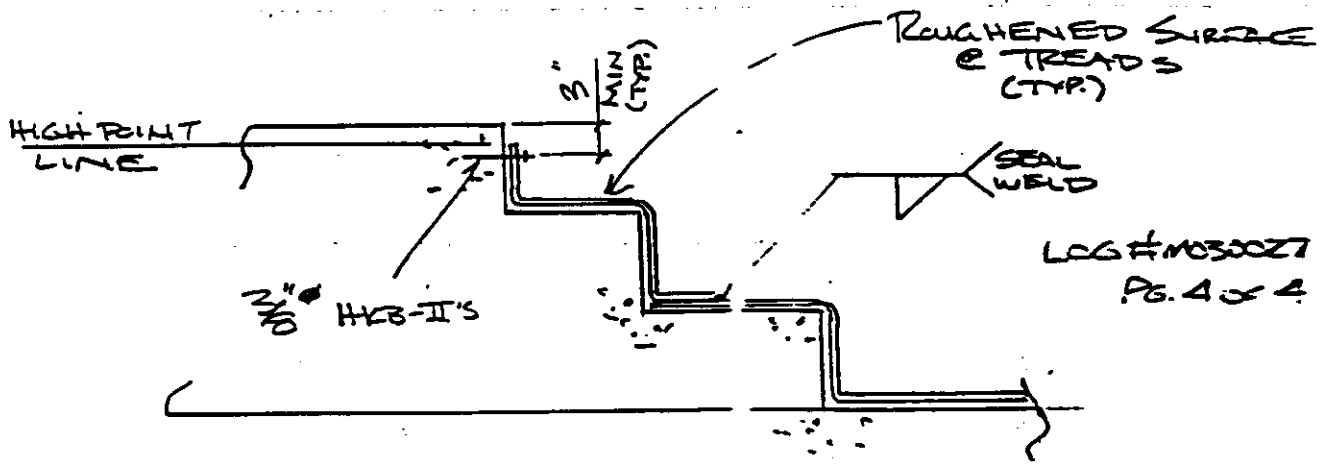

TYPICAL @ STAIRS

"INFORMATION ONLY"

"INFORMATION ONLY"

Nuclear Safety	Critical Protection	Production Support	General Services
	X		

CMP 03-2.1-2
ASR 36-139 (01/02/92)
PAGE 1 OF 4

CIP No. N-A

1. Inspection Record for Installation and Testing of Anchors
2a. CMP No. 03-2.1 Rev. 1
2b. IR No. 92IR15-H3781-4403-W802521-0001
2c. Page 1 of 4
3. Item(s) ANCHOR BOLTS FOR CONTAINMENT LINER PLATE
4. Scope/Location INSTALL 3/8" Φ ANCHOR BOLTS FOR CONTAINMENT LINER PLATE / Z41-96H (HOLD TANK ROOM)
5. Reference Criteria W802521 REV. 2 + DCF# V-20097-R TURNBACK # 578125
6. Prepared by [signature] Date 2-13-92 7. Reviewed by [signature] Date 2.13.92

2.
WP No. 92WPJ-HM010
I.R. Log No. M030030
DA No. V128

"INFORMATION ONLY"

8. Act. No.	9. Description	Design Categories	12. Item(s) Acceptance CDE/Date NS	CP	PS	GS	QCE/Date NS	CP	PS	E
		10. Insp. Code		X						
1.0	PREREQUISITES	11.								
1.1	Verify reference criteria is correct, complete and drawing revisions are current.		R	R	R	R	R	R		
			ZAP 4/6/92							
1.2	Review for any open NCRs that may affect scope of work.		R	R	R	R	R	R		
			ZAP 4/6/92							
2.0	IN-PROCESS INSPECTION ACTIVITIES									
2.1	Verify correct sized anchor holes drilled at specified locations using proper equipmt. Completed holes free of debris and rebar is undamaged.		S	S	S	S	S	S		
			See Continuation Sheet							
2.2	Verify cut rebar when other than carbide bits are used.		S	S	I	I	I	I		
			See Continuation Sheet							
2.3	Under cut anchors - verify that the drill bit used for under cut is proper size and within the manufacturer's specified tolerances.		S	S	I	S	I	I		
			See Continuation Sheet							
2.4	Anchors installed per design/manufacturer's instructions.		S	S	S	S	S	S		
			See Continuation Sheet							
3.0	FINAL INSPECTION ACTIVITIES									
3.1	Verify abandoned holes have been repaired. Verify anchor embedment, spacing, type, quantity, size, and edge distance.		S	S	I	S	I	I		
			See Continuation Sheet							
3.2	Anchors tested by torque or tensioner method as applicable. Anchor failures repaired and retested as required.		S	S	I	I	I	I		
			See Continuation Sheet							
3.3	Baseplate/fixture per design, seated properly or shimmed as required. Anchors undamaged.		S	S	I	I	I	I		
			See Continuation Sheet							
3.4	Anchor nuts fully engaged and bolts properly preloaded after baseplate fixture installed.		S	S	I	I	I	I		
			See Continuation Sheet							
3.5	Cut rebar as-built document complete (if required).		R	R	R	R				
			See Continuation Sheet							

"INFORMATION ONLY"

"INFORMATION ONLY"

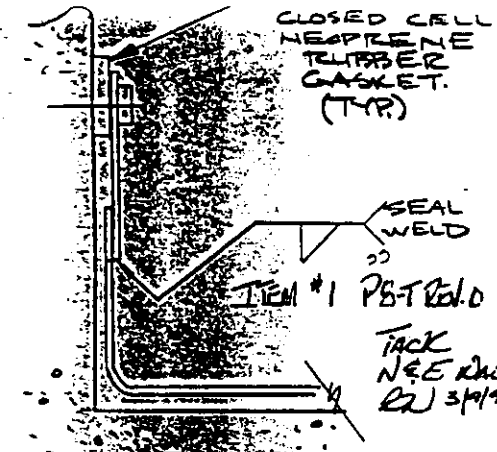

SECTION A

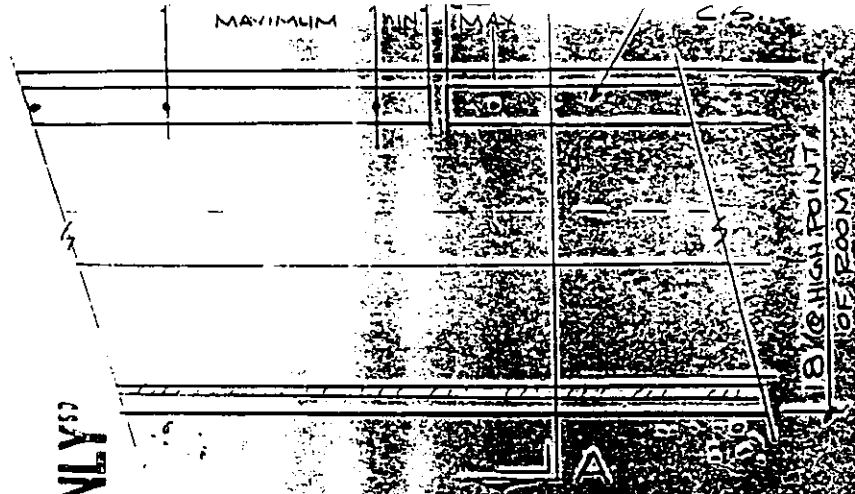

TYPICAL LINER PL EXTENSION

INFORMATION ONLY

INFORMATION ONLY

NOTES:

1) INDEPENDANT VERIFICATION IS NOT REQUIRED.
2) MATERIAL FOR EXTENSION OF LINER PL SHALL BE ASTM A240 304L ; 11 GA S.S.
3) SEAL WELDS SHALL BE PT'd IN ACCORDANCE WITH SITE STD PT (SR) - AWS, WITH ACCEPTANCE CRITERIA PER SECTION 9.2. VISUAL EXAMINATION PER CONST. INST. SPEC W-SPC-G-00029.
4) PAINT SYSTEM FOR C.S ITEMS SHALL BE SPEC 9454 SYSTEM S-211. TOUCH-UP SHALL BE S-207.
5) ANCHORS SHALL BE 3/8" ϕ HKB-II'S INSTALLED IN ACCORDANCE WITH C-SPG-G-00045 STD EMBEDMENT.

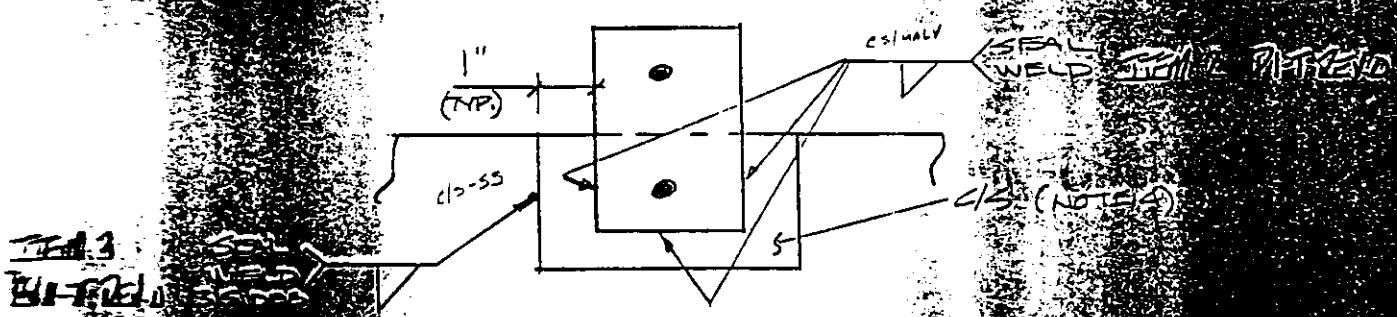

LINER @ OBSTRUCTIONS

INSPECTION RECORD CONTINUATION SHEET FOR INSTALLATION AND TESTING OF ANCHORS

Nuclear Safety [ ] Critical Protection [X]

Production Support [ ] General Services [ ]

IR No. LOG#M030030 PAGE 3 OF 4

9. ATTRIBUTE NUMBER

	Item 1	Item 2	Item 3	Item 4
1. ITEM ID	N.A			
2. Type	WEDGE HILTI			
3. Size	3/8"			
4. Location	241-H			
5. No. Installed	120			
6. No. Tested	120			
7. Test Method	TORQUE			
8. Failures A / B / C				
10. ITEM ACCEPTANCE CDE/Date (NS CP PS GS)	CP (marked)			
10. ITEM ACCEPTANCE QCE/Date (NS CP PS GS)				

"INFORMATION ONLY"

11. INSPECTION CODE	Item 1	Item 1 entry	Item 2	Item 3	Item 4
2.1	S S S S S S	ZHP 4.16.92	S S S S S S	S S S S S S	S S S S S S
2.2	S S I I I I	N.A	S S I I I I	S S I I I I	S S I I I I
2.3	S S I S I I	N.A	S S I S I I	S S I S I I	S S I S I I
2.4	S S S S S S	ZHP 4.16.92	S S S S S S	S S S S S S	S S S S S S
3.1	S S I S I I	ZHP 4.16.92	S S I S I I	S S I S I I	S S I S I I
3.2	S S I I I I	ZHP 4.16.92	S S I I I I	S S I I I I	S S I I I I
3.3	S S I I I I	ZHP 4.16.92	S S I I I I	S S I I I I	S S I I I I
3.4	S S I I I I	ZHP 4.16.92	S S I I I I	S S I I I I	S S I I I I
3.5	R R R R	N.A	R R R R	R R R R	R R R R
3.6 Grout IR No.	N.A				

"INFORMATION ONLY"

12. M&TE DATA	Item 1	Item 2	Item 3	Item 4
CDS	#062			
Due Date	7.13.92			
Value	±4%			

13. REMARKS	13. REMARKS	13. REMARKS	13. REMARKS

ANCHOR INSTALLATION CHECKLIST

LOG# M030030

1. WORK PACKAGE NO. 92WPJ-HM010
2. ELEVATION N.A
3. CDE/PHONE KEN WALDROP
4. QCE/PHONE N.A
5. ANCHOR TYPE: WEDGE [X] SLEEVE [ ] SHELL [ ] GROUT [ ] EPOXY [ ] UNDERCUT [ ] OTHER, SPECIFY: _____
6. ANCHOR MANUFACTURER HILTI
7. CONCRETE/MASONRY REACH REQUIRED STRENGTH: YES
8. REBAR SCAN REQUIRED N.A
9. NOMINAL ANCHOR DIAMETER 3/8"
10. LENGTH/LENGTH CODE 3 3/4" / E
11. INSTALLATION TORQUE 25 FT. LBS.
12. DRILL HOLE DIAMETER 3/8"
13. DRILL HOLE DEPTH MINIMUM 2" MAXIMUM 2 7/8"
14. TEST TORQUE 25 FT. LBS.
15. MINIMUM EDGE DISTANCE 4 1/8"
16. MINIMUM SPACING 3 3/4"
17. REQUIRED MIN. EMBEDDMENT: 1 5/8"
18. UNDERCUT ANCHORS (ONLY) SETTING LOAD/TORQUE _____
19. TENSION LOAD TORQUE _____
20. SLEEVE LENGTH _____
21. APPROVAL TO CUT REBAR: YES [ ] NO [ ]
22. IF YES, LIST APPROVAL DOCUMENT _____
23. NUMBER OF BARS APPROVED _____
24. DIRECTION OF BARS _____
25. FACE _____
26. SKETCH

"INFORMATION ONLY"

27. REMARKS _____

CMP 03.4.11.3
AGR 86-140 (06/03/91)
PAGE 1 OF 4

Nuclear Safety Inspection [ ] Critical Inspection [✓] Production Support [ ] General Services [ ]

CIP No. NA

2. WP No. 92WPW-HMDID
I.R. Log No. M030035
DA No. Y128

Welding Pipe Supports, Electrical Hangers, Component Supports and Structural Members and HVAC Duct

1. Inspection Record for Supports and Structural Members Rev. 1 2b. IR No. 92RSH3381-4404-W8D2521-0001 2c. Page 1 of 4
2a. CMP No. 03.4.11.3
3. Item(s) [illegible] ATTACHMENTS, STAYS
4. Scope/Location STAY WELD DIAPHRAGM ATTACHMENTS, STAYS & SECONDARY CONTAINMENT WELD PENETRATION
5. Reference Criteria [illegible] W8D2379.9/2 W8D2521 9/2 WSPEG00029 TUBEBACK # 5781-245
5a. Weld Procedure P1-T-9, P3-T-9, P4-T-9 Filler Material ER70S2, ER308L, ER309L 5c. Material Type A240/A36/A36 GALV
6. Prepared by Eddie Diaz Date 2-14-92 7. Reviewed by [signature] Date 2-17-92
8. Review criteria for completeness and correctness. R CDE [signature] Date 3-9-92 QCE Date
9. Review for open NCRs that affect scope of work. R CDE [signature] Date 3-9-92 QCE Date

INFORMATION ONLY

10. Weld/Item No.	Engineer	11. Weld Sz. / Type	12. NDE Procedure / PWHT	13. Material / Backing (CDE / QCE)	14. Joint Preparation & Cleanliness (CDE / QCE)	15. Joint Fit Up / Alignment (CDE / QCE)	16. Fillet Weld	17. WPS Variables / Process / Preheat / IPT & ETC. (CDE / QCE)	18. Filler Material / WPS (CDE / QCE)	19. Qualification Record (CDE / QCE)	20. Welder ID	21. Completed Weld / Welder ID (CDE / QCE)
				NS S S; CP S S; PS S; GS S	NS S S; CP S S; PS S; GS S	NS S S; CP S S; PS S; GS S		NS S S; CP S S; PS S; GS S	NS S S; CP S S; PS S; GS S	NS S R; CP S R; PS S; GS S		NS S 1; CP S 1; CPE 1 8; PS 1; GS 1
Item # 1	CDE / QCE	Seal	PT *		[illegible] 4-3-92	[illegible] 3-5-92		[illegible] 3-5-92	[illegible] 4-3-92	[illegible] 4-3-92	SM27 A-22, SM44, SM52	[illegible] 4-3-92
Item # 2	CDE / QCE	Seal	PT *		[illegible] 4-3-92	[illegible] 4-3-92		[illegible] 4-3-92	[illegible] 4-3-92	[illegible] 4-3-92	SM44	[illegible] 4-3-92
Item # 3	CDE / QCE	Seal	PT *		[illegible] 4-3-92	[illegible] 4-3-92		[illegible] 4-3-92	[illegible] 4-3-92	[illegible] 4-3-92	SM44	[illegible] 4-3-92

22. Supplemental Records
a. Traceability Sketch R CDE [signature] Date 4-17-92 QCE Date
b. NDE Reports R CDE [signature] Date 4-17-92 QCE Date
c. (PWHT) R CDE N/A Date QCE Date

23. Remarks: PT ALL WELDS
Contact CDE Welding For Inspections

24. Completed Inspection Record Reviewed & Accepted By [signature] Date 4-17-92

WORK PACKAGE NO. 92WPW-HM010 REV. 0

WORK PACKAGE DOCUMENT INDEX

SEC.	SUBJECT	REV.	INCL.	REF.
I	PERMITS			
	WORK PERMIT	0	X	
II	PROCESS RECORDS			
	N.A			
III	DESIGN OUTPUT DOCUMENTS			
	a. CONTROLLED COPY			
	9454	0		X
	W-SPC-G-00029	0		X
	C-SPG-G-00045	0		X
	b. WORKING COPY			
	W802521	2	X	
	DCF #Y-20097-R	0	X	
IV	FIELD FABRICATION DRAWINGS			
	FFD-I-H241-96H-10 (INFO.)	0	X	

SEC.	SUBJECT	REV.	INCL.	REF.
V	CONSTRUCTION INSPECTION PLAN			
	a. INSPECTION AND TEST PROCEDURES			
	CMP-10-1,1-2	0	X	X
	CMP-03-2,1-2	0	X	X
	CMP03-2-6	2	[illegible]	X

b. INSPECTION AND TEST RECORD	OPEN	DATE	CLOSED	DATE
F.I.R. LOG#M030027	X	2-13-92	X	4-16-92
ANCHORS LOG# M030030	X	2-13-92	X	4-16-92
COATINGS LOG - M030032	[illegible]	2-13-92	X	4-16-92
WELDER# M030035	X	[illegible]	X	4-17-92

VI	MISC.	REV.	INCL.	REF.
	SRS-WR-10 (SAMPLE)		X	

"INFORMATION ONLY"

ORIGINAL

MP 03-1.2-4
SR 36-267
1/20/91)
AGE 1 OF 1

WORK PACKAGE PROCESS RECORD

1WORK PACKAGE NO. 92WPW HM010

PAGE 3 OF 3

ACT. SEQ NO.	3. WORK ACTIVITY	4. ACCEPTANCE RESP.	INT.	DATE
1.)	SIGN-IN ON SHEET IN CONTROL ROOM DAILY BEFORE ENTERING HOLD TANK ROOM.	(21) FOREMAN	HRC	4-17-92
2.)	INSTALL FLASHING AS PER DCF #Y-20097-R.	(21) FOREMAN	HRC	4-17-92
3.)	CONTACT H.P BEFORE DRILLING OR WELDING.	(21) FOREMAN	HRC	4-17-92
4.)	AFTER WELDING IS COMPLETE CONTACT WELD ENG. FOR "PT".	(21) FOREMAN	HRC	4-17-92
5.)	"PT" ALL WELDS AS PER DCF # Y-20097-R.	WELD ENGINEER	[signature]	4-13-92
6.)	CONTACT PAINT CDF FOR TOUCH-UP AS NEEDED.	(21) FOREMAN	HRC	4-17-92
7.)	[redacted]	(21) FOREMAN	HRC	4-17-92

"INFORMATION ONLY"

"INFORMATION ONLY"

LOG # ND30035

PAGE 4 OF 4

WOR NUMBER	NONDESTRUCTIVE EXAMINATION REPORT LIQUID PENETRANT EXAMINATION	REPORT NUMBER
92IR151391F 4A04 1380571		92WPW-HM010

JOB NUMBER	NAME	DATE
3-8	SAVANNAH RIVER SITE	4-13-92

SO NO/DWG	LINE NO./PART ID	TIME OF EXAM	BSRI PT PROC NO
W1-80152	FILTRATE HOLD TANK	N/A ☐ PRE-PWHT ☒ POST-PWHT	PT(SR) ATJ5

CODE/WELD CLASS	PRE-EXAM CLEANER	PIPE DIA	MATL TYPE	TEMP
ASME VIII SET 9-92	MAGNAFLUX SKC-S	N/A	A240 TP304	MATL PENETR MATL

PENETRANT MATERIALS		
SOLVENT MFG: MAGNAFLUX SKC-S BATCH NO. 90F06P	PENETRANT MFG: MAGNAFLUX SKL-HF/S BATCH NO. 89A059	DEVELOPER MFG: MAGNAFLUX SKD-NF BATCH NO. 90F08P

DEFECT CODE: C - CRACKS R - ROUNDED INDICATION L - LINEAR INDICATION

PART OR WELD NUMBER	DISPOSITION ACC	DISPOSITION REJ	DEFECT CODE (ACC)	DEFECT CODE (REJ)	REMARKS
					DCFN Y2009162
ITEM 1	✓				LIQUID PENETRANT PERFORMED ON
					THE FOLLOWING DATES FOR ITEM 1
					4-1-92 * TEMP MATL = 69.8°F PENETR MATL = 71.6°F
					4-3-92 * TEMP MATL = 50°F PENETR MATL = 49°F
					4-10-92 * TEMP MATL = 73.4°F PENETR MATL = 82.2°F
					4-13-92 * TEMP MATL = 70°F PENETR MATL = 74.6°F
ITEM 2	✓				LIQUID PENETRANT PERFORMED ON 4-3-92
ITEM 3	✓				FOR ITEM'S 2 & 3
					* TEMP MATL = 50°F PENETR MATL = 61.9°F

"INFORMATION ONLY"

SKETCH:

NOTES	EXAMINER	LEVEL	DATE
DIGITAL THERMOMETER CDS# 2971 CAL. DATE 1-16-92 EXPIRES 4-16-92	[signature]		4-13-92
	INTERPRETER	LEVEL	DATE
	[signature]		4-13-92
	WITNESSED BY N/A		DATE

MOS NDE-018-PT

Nuclear Safety		Critical Protection	✓	Production Support		General Services	

CMP 03-2.6-1
ASR 36-115 (10/[illegible])
PAGE 1 OF 2

CIP No. N/A

1. Inspection Record for Protective Coatings

2a. CMP No. 03-2.6 Rev. 2

2b. IR No. 92IR15-H3781-4406-W802521-0001

2c. Page 1 of 2

2. WP No. 92WPWHMD10
I.R. Log No. M030032
DA No. Y128

3. Item(s) WELDS - DAMAGED AREAS ON CLIP - FLATBAR

4. Scope/Location TOUCH-UP DAMAGED COATINGS - SEAL SECONDARY CONTAINMENT FOR HOLD TK. ROOM. 1 W BENZINE BLDG. TURNBACK #3781-265

5. Reference Criteria Spec: 9454 R/D Coating System: S207 TOMATCH EXISTING COLOR DCF Y20097R W802521-R14

6. Prepared by [signature] Date 2.13.92 7. Reviewed by [signature] Date 2/13/92 2.13.92

8. Act. No.	9. Description Prime (P) Intermediate (I) Final (F) "INFORMATION ONLY"	Design Categories	12. Item(s) Acceptance CDE/Date NS	CP	PS	GS	QCE/Date NS	CP	PS	GS
		10. Insp. Code		✓						
1.0	PREREQUISITES	11.								
1.1	Verify reference criteria is correct, complete and drawing revisions are current.		R	R	R	R	R	R		
			[initials] 4.13.92							
1.2	Review for any open NCRs that may affect scope of work.		R	R	R	R	R	R		
			[initials] 4.13.92							
1.3	Fabrication/Installation IR reviewed for item readiness prior to coating. "INFORMATION ONLY"				R	R	R	R		
			[initials] 4.13.92							
2.0	IN-PROCESS INSPECTION ACTIVITIES									
2.1	Surface Preparation		S	S	I	S	I	I		
	A. Surfaces are in accordance with the requirements of the coating applied. Surfaces are clean, ~~have proper profile~~, free of defects, masked as required, environmental conditions as specified, ~~and plastic sheet test acceptable for concrete.~~ [initials] 4.13.92		P [initials] 4.13.92 [initials] 4.15.92 F [initials] 4.15.92				P I F			
	B. Abrasives used are clean, dry and acceptable for the type of surface prepared.				S		S	S		
			N/A							
	C. Air used for blast cleaning is oil free and dry, air is checked initially and every four hours during use.				S	S	I	S		
			N/A							
2.2	Coating Application [initials] 4.13.92		S	S	S	S	I	S		
	A. Environmental conditions ~~and blotter tests~~ are as specified for coating system applied		P [initials] 4.13.92 [initials] 4.15.92 F [initials] 4.15.92				P I F			
	B) Coating Material is as specified; Mix time, induction time, pot life, shelf life acceptable, ~~and thinner used is compatable.~~ [initials] 4.13.92		S	S	S	S	I	S		
	Manufacturer SHERW. WMS Type TILECLAD		P [initials] 4.13.92 [initials] 4.15.92 F [initials] 4.15.92				P I F			

IR No. M030032 Page 2 of 2

CMP 03-2.6-1
ASR 36-115 (10CFR50)
PAGE 2 OF 2

8. Act. No.	9. Description	Design Categories / 10. Insp. Code	11.	12. Item(s) Acceptance CDE/Date NS	CP	PS	GS	QCE/Date NS	CP	PS	GS
					✓						
2.0	IN-PROCESS INSPECTION ACTIVITIES										
2.2	C) Corners, sharp edges, and welds are stripe coated as required.			S	S	S		I	S	I	
				ZHP 4.13.92							
	D) Inner coat wet/dry film thickness, cure, and surface conditions are acceptable.			S	S	I	S	I	I		
				P ZHP 4.15.92 I N.A				P I			
3.0	FINAL INSPECTION ACTIVITIES										
3.1	Final coat cured as specified, demasking complete, and coating can be handled.			S	S	I	I	I	I		
				ZHP 4.16.92							
3.2	Final film thickness acceptable, and final surface is free of defects or damage.			S	S	I	I	I	I		
				ZHP 4.16.92							
3.3	Holiday testing is performed as required.			S	S	T	T	T	T		
				N.A							
4.0	SUPPLEMENTARY RECORDS										
4.1	Holiday Test Report					R	R	R	R	I	
				N.A							
5.0	EXCEPTIONS										
5.1 OR	No open exceptions noted.			R	R	R	R	R	R	I	
				ZHP 4.16.92							
5.2	Indicated open exceptions are described in 'Remarks' section.			R	R	R	R	R	R	I	

13. Remarks

CDS No. #2167 EXP. Date. 5.92
CDS No. #2630 EXP. Date. 6.3.92
CDS No. #3342 EXP. Date. 5.92
CDS No. _____ EXP. Date. _____

14. Completed Inspection Record Reviewed and Accepted by [signature] Date 4.16.92

ATTACHMENT C

Section C

"INFORMATION ONLY"

PROCEDURE MANUAL 1E6

ADMINISTRATIVE & TECHNICAL EXCELLENCE

CONSTRUCTION MANAGEMENT DEPARTMENT MANUAL

TOTAL QUALITY

"INFORMATION ONLY"

SAFETY • RESPONSIBILITY • SECURITY

SRS

SAVANNAH RIVER SITE

PROCEDURE CHANGE NOTICE (PCN)

CMP 01-1.2-5
ASR 36-03 (02/07/91)
PAGE 1 OF 2

PROTECTIVE COATINGS (U)

MANUAL No.	VOLUME No.	PROCEDURE No.	REVISION No.	PROCEDURE CATEGORY	EFFECTIVE DATE	PCN No.	PAGE
CMDM 1E6	03	CMP 03-2.6	2	2	01/23/93	2	1 OF 1

DESCRIPTION OF CHANGE

Add paragraphs 4.18 and 4.19 to read as follows:

4.18 Engineering Guide 09900-01-G, Protective Coatings - Cross Reference

4.19 Engineering Requirement 09900-02-R, Protective Coatings - Steel, Above Ground

Revise paragraph 6.12.1 to read as follows:

6.12.1 The CDE/QCE shall verify and document the attributes as shown on Attachment (-1) and (-6) as applicable. When additional data/ documentation is specified by design, that information shall be added as an attachment to the IR/PVR.

NOTE

When Document 09900-02-R is invoked by design, Appendices B, C, and D must be added as an attachment to the IR/PVR.

"INFORMATION ONLY"

Date 1/4/93
Rec. By [signature]
"INFORMATION ONLY"
DOCUMENT CONTROL CENTER CS

APPROVALS

"INFORMATION ONLY"

APPROVED BY [signature] for MANAGER OF CONSTRUCTION — 12/23/92 DATE

APPROVED BY [signature] for MANAGER, COGNIZANT QUALITY FUNCTION — 12-23-92 DATE

CONCURRED BY [signature] /DT CONSTRUCTION PROGRAMS AND ADMINISTRATIVE SERVICES MANAGER — 12/23/92 DATE

CONCURRED BY [signature] /PZ SPONSORING FUNCTIONAL DEPARTMENT MANAGER — 12/23/92 DATE

PROCEDURE CHANGE NOTICE (PCN)

CMP 01-1.2-5

ASR 36-83 (05/29/92)
PAGE 1 OF 2

PROTECTIVE COATINGS (U)

MANUAL No.	VOLUME No.	PROCEDURE No.	REVISION No.	PROCEDURE CATEGORY	EFFECTIVE DATE	PCN No.	PAGE
CMDM 1E6	03	CMP 03-2.6	2	2	12/04/92	1	1 OF 1

DESCRIPTION OF CHANGE

Date 11/11/92
Rec. By CGL
DOCUMENT CONTROL CENTER CS

Revise Paragraph 6.10.1 as follows:

6.10.1

d) Solvent cleaning vats are to, be secured when not in use (e.g. locate within a locked area or lock individual vats).

e) Line the base of the wash area with a durable plastic or similar impervious material covered with a four (4) to six (6) inch bed of sand to protect the ground and facilitate the cleanup of an accidental spill.

f) Set up work stations within the wash area to accommodate the required cleaning (e.g. water baths for latex paint, solvent baths for oil-base/epoxy paints).

g) Cleaning solvents shall be limited to VARSOL, METHYL ETHYL KETONE (MEK), AND 54 REDUCER.

NOTE

These cleaning solvents are to be segregated in vats as follows:
VARSOL to be solely contained in a cleaning vat
MEK & 54 REDUCER may be contained in the same cleaning vat
Under NO CIRCUMSTANCES shall VARSOL be mixed with the MEK and 54 REDUCER.

"INFORMATION ONLY"

APPROVALS

APPROVED BY _____ 11/4/92 _____
MANAGER OF CONSTRUCTION FOR GW STANLEY DATE

APPROVED BY _____ 10/30/92
MANAGER, COGNIZANT QUALITY FUNCTION DATE

CONCURRED BY _____ 10/30/92
CONSTRUCTION PROGRAMS AND ADMINISTRATIVE SERVICES DATE

CONCURRED BY _____ 10/30/92
SPONSORING FUNCTIONAL DEPARTMENT MANAGER DATE

CONSTRUCTION MANAGEMENT PROCEDURE

CMP 01-1.2-2

PROTECTIVE COATINGS

MANUAL No.	VOLUME No.	PROCEDURE No.	REVISION No.	PROCEDURE CATEGORY	EFFECTIVE DATE	PAGE
CMDM 1E6	03	CMP 03-2.6	2	2	01/02/92	1 OF 39

REVISION DESCRIPTION OR CANCELLATION JUSTIFICATION

General Revision

Verbatim Incorporation of PCN #1

CONTROLLED COPY
ISSUED BY DCC/CS

APPROVED BY R. C. Kelley for MANAGER OF CONSTRUCTION — 12/5/91 DATE

APPROVED BY M. A. Sanchez /HFL MANAGER, CONSTRUCTION AND SITE SERVICES QUALITY ASSURANCE — 12-5-91 DATE

CONCURRED BY Stan Elmore /DT CONSTRUCTION PROGRAM MANAGER — 12-5-91 DATE

CONCURRED BY [illegible] /SDH CONSTRUCTION QUALITY CONTROL MANAGER — 12-5-91 DATE

CONCURRED BY [illegible] SPONSORING FUNCTIONAL DEPARTMENT MANAGER — 12/5/91 DATE

PROCEDURE SPONSOR RICK KOWALSKI

PROTECTIVE COATINGS

TABLE OF CONTENTS
PAGE 1 OF 2

SECTION		PAGE
1.0	PURPOSE	4
2.0	SCOPE	4
3.0	DEFINITIONS	4
4.0	REFERENCES	7
5.0	RESPONSIBILITIES	8
6.0	REQUIREMENTS	10
6.1	Work Packages (WPs)	10
6.2	General Requirements	11
6.3	Metallic Surface Preparations	13
6.4	Concrete and Masonry Surface Preparations	15
6.5	Other Type Material Surface Preparations	16
6.6	General Coating System Application Requirements	16
6.7	Decorative Coating System Application Requirements	19
6.8	Maintenance/Touch-Up Coating System Application Requirements	19
6.9	Underground Pipe Coating System Application Requirements	20
6.10	Paint Cleanup	21
6.11	Excess/Waste Paint and Solvent Materials	22
6.12	Inspection Criteria	22

PROTECTIVE COATINGS

TABLE OF CONTENTS
PAGE 2 OF 2

SECTION	PAGE
6.13 Defects	25
6.14 Document/Form Processing	26
6.15 Inspection Record Preparation	26
7.0 DOCUMENTATION	27
8.0 ATTACHMENTS	27

PROTECTIVE COATINGS

1.0 PURPOSE

This procedure provides instructions and establishes responsibilities of Construction Management Personnel to ensure consistency for the application, inspection/ verification and documentation of activities associated with Protective Coatings at the Savannah River Site.

2.0 SCOPE

2.1 The requirements of this procedure apply to all protective coating applications performed by Construction Management and Construction Cost-Plus-Fixed-Fee (CPFF) Subcontractors. Protective Coating applications performed by other than Construction Management or CPFF Subcontractors shall comply to the requirements of their applicable contract.

2.2 The scope of activities included within this procedure apply for, but is not limited to, processes for surface preparation, spray and brush coating applications, curing, inspection and testing of above and below ground commodities. Requirements of this procedure apply for protective coatings for radiation and/or corrosion areas, non-radiation and/or non-corrosion areas, decorative areas, and the maintenance of existing coatings at the Savannah River Site.

2.3 The only exception to this procedure is the Replacement Tritium Facility (RTF) Project 9S4149 and all associated AMOs.

2.4 The requirements of this procedure are not applicable to blast cleaning performed to clean a surface or to remove an existing coating system when the surface in question is not to be coated immediately and does not need to achieve a specific Structural Steel Painting Council (SSPC) surface profile.

3.0 DEFINITIONS

3.1 Blast Cleaning

Cleaning and roughing of a surface (particularly steel) by the use of metallic or non-metallic grit or metal shot (usually steel) which is projected against a surface by compressed air, centrifugal force or water.

PROTECTIVE COATINGS

3.2 Dry Spray

Over spray or bounce back causing a rough, porous surface texture with a sandpaper like finish. This condition may be caused by the spraying apparatus being held to far from the surface to be coated, high temperature and low humidity.

3.3 Field Coatings

Coating applications performed at the Savannah River Site including the Central Shops Paint Shop.

3.4 Film Thickness

Thickness of any applied film, wet or dry.

3.5 Fish Eyes

A paint defect that manifest itself by the crawling of wet paint into a recognized pattern resembling small "dimples" or "fish eyes".

3.6 Holiday

A discontinuity, pinhole, skip or void in coating materials which may expose the substrate of the item to the environment.

3.7 Maintenance Painting

Any previously coated surface that requires coating repair or touch up in order to restore the item to its original service condition.

3.8 Mill Scale

A heavy oxide layer that is formed during hot fabrication or heat treatment of metals.

3.9 Mudcracking

A paint film defect characterized by a broken network of cracks in the paint coating.

3.10 Non-Corrosion Area

An area where there is no exposure to a corrosive environment or corrosive chemicals.

3.11 Orange Peel

A surface condition of a coating resembling the texture of an orange peel.

3.12 Over Spray

Refers to the excess spray that does not adhere to the object being coated.

3.13 Pinhole

A coating defect characterized by small pore like flaws which extends through the entire coating and has the general appearance of pin pricks when viewed by reflecting light. The term is rather generally applied to holes caused by solvent bubbling of extraneous particles in the applied coating.

3.14 Radiation and/or Corrosion Areas

Areas where coatings will be exposed to radiation and/or corrosive chemicals as determined by the CDE from appropriate design/site specification requirements.

3.15 Shop Coatings

Refers to coating applications performed outside the boundaries of the Savannah River Site.

3.16 Surface Profile

A roughness of a surface created by surface preparation such as abrasive blasting, chemical etching, or other means.

3.17 Touch-up/Repair Area

Refers to the cleaning and coating of damaged, defective, or incomplete coated items (e.g., scrapes, nuts, bolts, weld zone areas, etc.). This is normally a non-accumulative area of exposed substrate one (1) square foot or less, unless otherwise noted by design.

4.0 REFERENCES

4.1 ASTM D1186, Nondestructive Measurement of Dry Film Thickness of Nonmagnetic Coatings applied to a Ferrous Base

4.2 ASTM D1400, Nondestructive Measurement of Dry Film Thickness of Nonconductive Coatings applied to a Non Ferrous Metal Base

4.3 ASTM D4258, Practice for Surface Cleaning Concrete for Coating

4.4 ASTM D4259, Practice for Abrading Concrete

4.5 ASTM D4263, Indicating Moisture in Concrete by the Plastic Sheet Method

4.6 ASTM E337, Wet and Dry Bulb Psychrometer Test

4.7 General Site Specification No. 5992, Design and Fabrication to Minimize Chloride Stress Corrosion Cracking in Austenitic Stainless Steel

4.8 General Site Specification No. 9454, Painting and Protective Coatings

4.9 General Site Specification No. 9543, Corrosion Protection for Under Ground Piping

4.10 National Association of Corrosion Engineers (NACE) RP-0188-88, Discontinuity (Holiday) Testing of Protective Coatings

4.11 Steel Structures Painting Council (SSPC), Painting Council-Systems and Specifications, Steel Structures Painting Manual Surface Preparation and Application Specification

4.12 SSPC-PA2, Steel Structures Painting Council-Paint Application Specification No. 2, Measurement of Dry Paint Thickness with Magnetic Gauges

4.13 CMP 10-1.1, Inspection and Test Control

4.14 CMP 01-1.13, Records Management Plan

4.15 CMP 10-1.7, BSRI Construction Control of Quality Assurance Records

4.16 CMP 03-1.4, Measuring and Test Equipment

4.17 CMP 05-12.6, Materials Classification and Disposition

5.0 RESPONSIBILITIES

5.1 The Area Construction Engineering Manager(s) (ACEM) is responsible to:

a) Provide technical direction to Construction Discipline Engineers (CDEs).

b) Assure that Protective Coating Work Packages (WPs) are properly developed and are technically accurate.

5.2 The Construction Discipline Engineer(s) (CDE) is responsible to:

a) Initiate and process WPs for protective coating applications in accordance with the procedure for The Development and Control of Work Packages.

b) Initiate applicable documentation within the WP to ensure compliance with design/site specification and this procedure's requirements.

c) Determine applicable quality level of the protective coating operation from design/site specification and this procedure's requirements.

d) Provide technical assistance to support the Discipline Craft Superintendent (DCS).

e) Perform and document inspection activities as required by the applicable inspection record or peer verification record to ensure compliance to specified design requirements.

f) Provide notification to Quality Control Engineers (QCEs) to perform required inspection(s).

5.3 The Discipline Craft Superintendent (DCS) is responsible to:

a) Ensure proper equipment and correct materials are used to perform the specified protective coating applications in accordance with WP requirements.

b) Ensure all coating materials to be used are within the current shelf life, are properly sealed and are in satisfactory condition for use.

c) Ensure all coating materials and thinning agents are mixed in strict compliance to manufacturer's written instructions, the WP, and this procedure's requirements.

d) Ensure protective covering/masking is performed as required.

e) Provide craft with supervisory direction for proper application of protective coatings.

f) Assure all protective coatings are applied in strict compliance to the WP and this procedure's requirements.

g) Ensure proper curing of required material prior to additional coating applications.

h) Ensure coating thickness requirements comply to WP requirements prior to notification of CDE to perform required inspections.

i) Provide signature acceptance of protective coating applications associated with "Decorative Areas" in accordance with this procedure's requirements.

j) Ensure equipment/materials are cleaned and all waste or surplus is properly disposed of.

5.4 The Area Quality Control Manager shall be responsible for assuring independent inspection activities falling within the scope of Construction Quality Control are properly implemented.

5.5 The Quality Control Engineer (QCE) is responsible to:

a) Perform and document in-process and final coating inspection of Nuclear Safety (NS) and Critical Protection (CP) applications unless otherwise specified by design, or Construction Management.

b) Complete and process Inspection Reports (IRs) in accordance with CMP 10.1.1, Inspection and Test Control.

c) Perform applicable inspection of SRS paint shop coated items prior to release to the field.

d) Perform Holiday or other design specified testing as required.

5.6 The Area Environmental Engineer (AEE) is responsible to:

a) Coordinate the sample collection of coatings suspected of containing toxic metals.

b) Coordinate the analysis of samples with Independent Testing Laboratories as applicable.

c) Interpret results of analysis reports for further processing of coatings or spent sandblast grit.

6.0 REQUIREMENTS

6.1 Work Packages (WPs)

6.1.1 Work Packages for Protective Coating applications shall be initiated, processed and approved in accordance with the procedure for The Development and Control of Work Packages.

6.1.2 The scope of the WP shall be determined by the Construction Discipline Engineer (CDE) responsible for the area/system.

6.1.3 Documentation and instructions required for protective coating applications may be included in a stand alone WP or may be included as a section within another discipline WP.

6.1.4 Each protective coating WP shall contain, as applicable, the following records:

a) Inspection Record for Protective Coatings, Attachment CMP 03-2.6-1.

b) Holiday Test Report, Attachment CMP 03-2.6-2.

c) Inspection Record Continuation Sheet for Protective Coatings, Attachment CMP 03-2.6-7.

d) Peer Verification Record for Protective Coatings, Attachment CMP 03-2.6-6.

6.2 General Requirements

6.2.1 Receipt, storage and maintenance of coatings and related materials shall comply to applicable procedure requirements and manufacturer's written instructions unless otherwise specified by design.

6.2.2 All protective coating activities shall be performed in strict compliance to the appropriate approved Design output documents and this procedure's requirements, respectively. Any conflict of the above shall be resolved by the CDE with design concurrence, as applicable.

6.2.3 All coating materials shall be inspected for proper identification and damage prior to use. Materials shall be identified by the manufacturer's name, product name, batch number and date of manufacturer. Material that is not properly identified or that has exceeded its shelf life shall not be used unless approved by design. Containers that have been damaged to the extent that the seal has been broken or the material has leaked shall not be used.

PROTECTIVE COATINGS

6.2.3.1 When coating materials are subdivided into a smaller container to accommodate the application (confined space, RCA area, etc.), the responsible craft shall transfer the manufacturer's name, product name, batch/lot number, expiration date, and whether Part A or Part B to the container for identification purposes. These containers shall be clean and free from all deleterious materials such as hardened paints from previous use.

6.2.4 All surfaces to receive protective coatings shall be prepared in strict compliance to design/site specification requirements.

6.2.4.1 Previously coated surfaces that are to receive new coatings shall be prepared in accordance with this procedure and design/site requirements. Existing coatings that are suspected or known to contain toxic metals (e.g., lead, mercury, chromium), and will be subjected to abrasive blast cleaning, shall be sampled and analyzed for toxic constituents. This sampling/analysis shall be coordinated through the Area Environmental Engineer (AEE) and be performed prior to sandblasting operations or by analyzing the spent sandblast grit (contained during sandblast operations) prior to disposal. No spent sandblast grit will be deposited at a sanitary landfill or inert disposal site unless known or proven free of toxic constituents.

6.2.5 Surfaces to be coated shall be free of grease, oil or other contaminates that would prohibit proper adhesion of the coating material to the surface being coated. Grease and oil shall be removed by solvent cleaning in accordance with the Steel Structures Painting Council (SSPC) Specification SSPC-SP1. Only non-chlorinated solvents shall be used on stainless steel in accordance with General Site Specification No. 5992.

6.2.6 Abrasive used for blast cleaning shall be clean, dry and suitability sized to produce the required surface profile. Abrasive used on stainless steel shall be tested and approved for use in accordance with General Site Specification No. 5992.

PROTECTIVE COATINGS

6.2.7 Compressed air used for abrasive blast cleaning or coating applications shall be Blotter Tested and determined to be clean and dry.

6.2.8 Mixing and application of Protective Coatings shall be performed in strict compliance to the WP, site specification or this procedure's requirements unless specified otherwise by design.

6.2.9 All instruments used to determine compliance to specified requirements shall be controlled and within current calibration in accordance with CMP 03-1.4, Measuring and Test Equipment.

6.2.10 The CDE, and QCE as appropriate, shall perform and document required inspections shown on the Inspection Record (IR) Attachment (-1) or the Peer Verification Record (PVR), Attachment (-6) in accordance with CMP 10.1.1, Inspection and Test Control.

6.3 Metallic Surface Preparations

6.3.1 It is recommended that prior to surface preparation of items for coating applications, the air temperature, surface temperature, dew point and relative humidity be determined using a calibrated [illegible] and surface thermometer in accordance with the American Society of Testing and Materials (ASTM) Specification E3[illegible]. Readings should be taken prior to beginning the surface preparation and at least once every four (4) hours thereafter.

6.3.2 Compressed air to be used in abrasive blast cleaning operations shall be Blotter Tested and determined to be clean and dry. The test shall be conducted downstream of the separator by blowing the air onto a clean white blotter or cloth for a minimum of two (2) minutes to check for contamination or moisture.

6.3.2.1 The Blotter Test shall be performed at the beginning of the work activity and a minimum of once every four (4) hours thereafter. If contaminants are present, the air shall not be used until the problem has been corrected and the air has been retested and found to be clean.

"INFORMATION ONLY"
"INFORMATION ONLY"

6.3.2.2 Surface preparations that are found having been prepared using contaminated air shall be reblasted with clean air and abrasive.

6.3.3 The surface preparation of carbon steel shall be performed in accordance with the applicable SSPC Surface Specification as specified by design for the particular coating system to be used. Surface profile produced by abrasive blast cleaning shall conform to the specified requirements. When surface profile measurements are required, they shall be performed in accordance with the applicable ASTM test method.

6.3.3.1 The type of surface preparation for items to be coated that are located in a radiation or radiologically controlled area shall have Health Protection - Operations concurrence prior to the performance of work.

6.3.4 Surface preparation of galvanized steel shall conform to the requirements of SSPC-Surface Preparation Specification SP2, Hand Tool Cleaning, SP3, Power Tool Cleaning, or SP7, Brush Off Blast Cleaning or as specified by design.

6.3.5 Stainless steel and aluminum surfaces that require coating shall be abrasive blasted to uniformly roughen the surface and produce the surface profile specified by design for the specified coating system to be used.

6.3.5.1 Solvents used on stainless steel items to remove oil or grease shall contain less than 250 PPM Chlorides.

6.3.6 Prior to abrasive blasting, assure all nameplates, identification tags, finished flange faces, valve stems, grease fittings, adjacent equipment, etc., are masked to prevent damage.

6.3.7 Abrasive blast operations shall comply to the Safety procedures for Sandblasting and Similar Equipment.

6.3.8 Spent abrasive blasting materials shall be accumulated and disposed of in the SRS sanitary landfill in accordance with applicable procedure requirements.

6.3.9 Final mechanical surface preparation shall not be performed if the surface temperature is less than 5 °F above the dew point.

6.3.10 Metal imperfections encountered during abrasive blast cleaning shall be reworked/repaired by grinding, chipping and/or welding in accordance with design, site specification or applicable approved procedural requirements.

6.3.10.1 Imperfections include all burrs, slivers, scabs, lamination, weld splatter, weld porosity and crevices.

6.3.10.2 Imperfections which potentially violate the minimum wall thickness or corrosion allowances shall be evaluated by the CDE/QCE for corrective action.

6.3.10.3 After the required repair/rework has been completed, the required degree of cleaning and surface preparation/profile shall be restored to the design/ site specification requirements.

6.4 Concrete and Masonry Surface Preparations

"INFORMATION ONLY"

6.4.1 Prior to concrete and masonry surface preparations, the compressed air shall be verified as delineated in Section 6.3.

6.4.2 Contaminates such as oil, grease and similar materials shall be removed by scraping off heavy deposits followed by washing the contaminated areas with detergent and water in accordance with ASTM Specification D4258.

6.4.3 The prepared surface shall be uniformly roughened with the concrete free of all laitance, glaze, efflorescence, curing compounds and form release agents.

6.4.3.1 Concrete form release agents and curing compounds shall be removed unless the CDE has provided written confirmation that the release agents and curing compounds used are compatible with the coating system to be applied.

6.4.4 The concrete surface shall be wet or dry abrasive blast cleaned in accordance with ASTM Specification D4259 unless specified otherwise by design.

6.4.5 Concrete and masonry surfaces shall be tested for the presence of moisture immediately prior to the coating system being applied. The test for the presence of moisture shall be performed in accordance with the Plastic Sheet Method defined in ASTM Specification D4263. The coating shall not be applied to the surface if moisture has condensed on the back of the plastic sheet. If moisture is detected, the concrete shall be dried and retested.

6.5 Other type Material Surface Preparations

All other type surface preparations shall be performed in accordance with specified design or site specification requirements.

6.6 General Coating System Application Requirements

6.6.1 Prior to coating, the air temperature, surface temperature, dew point, and relative humidity shall be determined using a calibrated psychrometer and surface thermometer in accordance with the American Society of Testing and Material (ASTM) Specification E337. Readings shall be taken prior to beginning the application and at least once every four (4) hours thereafter.

6.6.2 Compressed air to be used shall be Blotter Tested and determined to be clean and dry. The test shall be conducted downstream of the separator by blowing the air onto a clean white blotter or cloth for a minimum of two (2) minutes to check for contamination or moisture.

6.6.3 The blasted surface of all materials to be coated shall be brushed with a clean bristle brush, vacuumed or blown down with clean dry compressed air to ensure all spent abrasive materials have been removed from the surface.

6.6.3.1 Brushes used on stainless steel materials shall not be interchangeably used on carbon steel materials.

PROTECTIVE COATINGS

6.6.4 The primer, or first coat, should be applied the same day the surface is cleaned. If rust blooms occur prior to coating the item, the surface shall be recleaned to the specified requirements.

6.6.5 Coating applications shall not be performed under any of the following conditions:

a) When the air, material or substrate is below 50° F or above 110° F unless specified otherwise by design.

b) When the substrate temperature is less than 5° F above the dew point.

c) When the relative humidity is above 85%.

d) When the temperature of coating materials are not in compliance with the manufacturer's written instructions.

e) When winds interfere with the spray pattern, cause dry spray or carry spray into unprotected adjacent areas.

1) Efforts shall be taken to minimize over spray onto land surfaces.

"INFORMATION ONLY"

f) During any form of precipitation.

g) When compressed air to be used for the spray applicator is found to be contaminated.

h) When coating materials have exceeded their shelf/pot life.

i) When materials are improperly mixed or thinned.

1) Mixing and thinning of coating materials shall be in strict compliance with design/manufacturer's written instructions. The amount of thinner used shall not exceed manufacturer's recommendations unless approved by design.

6.6.6 Prior to the coating system being applied, ensure the following:

a) All corners, sharp edges and welds are stripe coated with primer as required. Stripe coating is required in radiation and/or corrosion areas and should be performed when practical for non-radiation and non-corrosion areas. Stripe coating shall not be performed when inorganic zinc primer is used or on previously coated sound surfaces.

1) Stripe coating shall be applied by brush and shall extend a minimum of 1/4" beyond the limits of the corner, edge or weld. Stripe coating is in addition to the full prime coat and will normally be applied prior to the application of the specified prime coat. The stripe coat shall be allowed to dry until it is tack free before the full prime coat is applied.

NOTE

Stripe coating may be applied after the full prime coat if there is a risk of rusting of the blast cleaned surface. When the stripe coating is applied over the full prime coat, the prime coat shall be allowed to cure for at least the minimum cure time recommended by the manufacturer before stripe coating is applied. The stripe coat shall be allowed to cure to specified time prior to application of additional coats.

---

b) All nameplates, finished flange faces, identification tags, etc., are masked to prevent accidental coating or over spray contamination.

6.6.7 Each coat applied shall be allowed to cure for the minimum time specified by design or site specification requirements.

6.6.8 The Dry Film Thickness (DFT) or Wet Film Thickness (WFT) shall be as specified by design requirements for the particular coating system used.

6.6.8.1 The DFT for carbon steel shall be measured in accordance with SSPC-PA2 using a calibrated gage.

6.6.8.2 The DFT for aluminum, stainless steel and concrete shall be calculated from WFT measurements. Calculation formulas are as provided in references per Section 4.0 of this procedure.

6.6.8.3 An acceptable alternate to taking WFT measurements of nonconductive coatings on nonferrous metal surfaces shall be accomplished utilizing the Positector 3000, an eddy current instrument, to measure DFT.

6.6.8.4 The CDE or QCE as applicable, shall verify that thickness gages used to perform measurements are in proper working condition and within current calibration in accordance with CMP 03-1.4, Measuring and Test Equipment.

6.6.9 Coating defects in any coat shall be repaired before applying additional coats.

6.6.10 Dust or other contaminates on previously coated surfaces shall be removed before applying additional coats.

"INFORMATION ONLY"

6.7 Decorative Coating System Application Requirements

6.7.1 The requirements for decorative coating system applications shall be specified in the applicable Discipline Work Package.

6.7.2 Upon completion of the work, the Discipline Craft Superintendent (DCS) shall visually inspect the coated surfaces for proper application and general appearance. Inspection criteria shall include excessive runs, sags, skips, hiding and uniform color. Upon completion of the inspection, the DCS shall sign and date the WP to signify acceptance of the coating activity.

6.8 Maintenance/Touch-Up Coating System Application Requirements

6.8.1 Maintenance and touch-up coating system applications should be accomplished using the same type or compatible coating, preferably by the same manufacturer, as the previous coating. WP instructions shall delineate the repair or touch-up requirements for the specific coating system to be used.

6.8.1.1 When compatibility is unknown, a sample area, as determined by the CDE, shall be prepared and coated to test the compatibility of materials. If the new coating material causes the existing coating to soften, curl, wrinkle or lift within the curing time of the applied coating, remove the new coating material and contact the CDE to obtain Design Engineering recommendations.

6.8.2 After compatibility is established, the area to be coated shall be completed as follows unless specified otherwise by design documents.

a) The condition of the existing coating shall be determined to establish the repair procedure.

b) A method of preparing the affected area substrate shall be established based on design document recommendations, coating location and site conditions.

c) Cleaning shall be performed two (2) inches beyond the damaged areas in all directions or until tightly adhered paint is obtained. Paint is considered adherent if it cannot be removed by lifting with a putty knife. Where the remaining paint is thick, all exposed edges shall be feathered.

d) Spot cleaning shall be conducted in a manner which will minimize damage to sound paint.

e) Prime, intermediate and top coatings shall be applied in accordance with specified design requirements.

6.9 Underground Pipe Coating System Application Requirements

6.9.1 Underground protective pipe coating surface preparation, application, inspection, maintenance and repair shall be performed in accordance with Section 6.2, 6.6, 6.8, and 6.12 of this procedure's requirements unless specified otherwise by design.

6.9.2 Prior to the coating application, ensure the coating materials comply with specified design requirements. If alternate materials are to be used, they must be pre-approved with documented design concurrence. Also, ensure all pressure and/or weld testing have been completed and are accepted.

6.9.3 Testing on underground coated installations shall be as specified by design. When High Voltage Holiday Testing is required it shall be performed in accordance with attachment CMP 03-2.6-5, Holiday Detector Operation and Use. When Holiday Testing using the low voltage wet sponge method is specified it shall be performed in accordance with the National Association of Corrosion Engineer (NACE) Standard RP-0188-88, "Discontinuity (Holiday) Testing of Protective Coatings".

6.10 Paint Cleanup

6.10.1 The DCS shall establish a wash area for spray equipment, paint brushes and related hardware in accordance with the following guidelines:

"INFORMATION ONLY"

a) Locate the wash area as close to the painting operation as practicable with adequate provisions for material/container handling and transportation.

b) Install a visible boundary to define the wash area (e.g. chains, flagging).

c) Install "No Smoking" and "Flammable" signs to indicate hazards within the area.

d) Line the base of the wash area with a durable plastic or similar impervious material to protect the ground and facilitate the cleanup of an accidental spill.

e) Set up work stations within the wash area to accommodate the required cleaning (e.g. water baths for latex paint, solvent baths for oil-base/epoxy paints).

6.10.2 Maintain good housekeeping practices within the wash area as follows:

a) Seal all solvent containers/cleaning vats when not in use.

b) Use drum covers when drums are stored outdoors. Store containers in a manner to avoid rainwater collection.

c) Ensure all containers are in good condition with no visible leaks, defects or severe rusting.

d) Ensure the wash area is not used as a general painting materials storage area.

e) Label all containers in accordance with safety and hazard communications requirements.

6.11 Excess/Waste Paint and Solvent Materials

6.11.1 Excess/Waste paint and solvent materials shall be transferred to the Material Classification Area in Central Shops in accordance with CMP 05-12.6, Materials Classification and Disposition.

6.12 Inspection Criteria

6.12.1 The CDE/QCE, shall verify the attributes as shown on Attachment (-1) and (-6) as applicable.

6.12.2 All Measuring and Test Equipment required for quality verification activities shall be documented in accordance with CMP 03-1.4, Measuring and Test Equipment (e.g., Environmental conditions determined utilizing M&TE equipment shall be recorded on the M&TE Use Log, and the CDS numbers shall be recorded on Attachment (-1), (-2) or (-6) as applicable).

6.12.3 Inspection of Radiation and/or Corrosion Areas shall be performed in accordance with the IR, Attachment (-1) or PVR, Attachment (-6) as follows:

a) Immediately prior to surface preparation:

1) Inspect abrasive to ensure it is clean and dry and suitably sized to produce specified surface profile.

2) Verify areas masked as required.

3) Verify compatibility of concrete curing compounds and form release agents when not removed.

4) Verify concrete cured to specified requirements.

5) Verify compressed air to be used is clean and dry by Blotter Test.

b) Immediately prior to application of prime coat:

1) Verify surface profile on the metal surfaces using a replica film and micrometer or comparator to ensure compliance to specified requirements.

2) Inspect metal surfaces for visible rusting, contamination, cleanliness and to ensure no metal imperfections are present.

3) Determine air temperature, surface temperature, dew point and relative humidity for compliance to specified requirements.

4) Verify compressed air to be used is clean and dry by Blotter Test.

5) Verify concrete surfaces to be coated are thoroughly dry by Plastic Sheet Method Test.

6) Verify coating materials to be used are within current pot/shelf life and are the correct type.

7) Verify masking has been performed as required.

8) Verify that mixing and thinning of coating materials are performed in strict compliance to specified requirements.

9) Verify that metal edges, corners, and welds are stripe coated.

c) Immediately prior to the application of each succeeding coat:

1) Verify minimum cure time has elapsed.

2) Inspect previous coat for contamination or for defects as delineated in Section 6.13.

3) Measure or calculate the current coating film thickness.

4) Determine air temperature, surface temperature, dew point and relative humidity.

5) Verify compressed air is clean and dry by Blotter Test.

6) Verify coating materials to be used are within current pot/shelf life and are the correct type.

7) Verify masking has been performed as required.

8) Verify that mixing and thinning of coating materials are performed in strict compliance to specified requirements.

d) Final Inspection:

1) Verify the coating system has cured for minimum specified time.

2) Inspect the completed coating for imperfections/ defects as delineated in Section 6.13.

3) Verify coating thickness conforms to specified requirements.

4) Perform any testing as specified by design.

6.12.4 Inspection for non-corrosion/non-radiation areas shall be performed as follows:

a) Inspection criteria shall comply with the same criteria specified for Radiation and/or Corrosion Areas with the following exception.

1) Surveillance shall be performed at intermediate coats to ensure compliance to specified requirements.

PROTECTIVE COATINGS

6.12.5 Inspection of maintenance protective coating applications shall be performed by the CDE, or QCE, in accordance with the respective category delineated within Section 6.0.

6.12.6 Inspection of Concrete and Masonry Protective Coatings shall be performed in accordance with Section 6.4 and 6.6.

6.12.7 Inspection of decorative coating applications shall be performed by the DCS in accordance with Section 6.7.

6.13 Defects

6.13.1 All defects in radiation areas that are not considered decontaminable, as determined by the CDE, shall be corrected.

6.13.2 Runs, sags, and curtains are not acceptable. If present, they shall be removed by sanding, or grinding and recoated as necessary to obtain the desired finish.

6.13.3 Mud cracking shall not be allowed. If present, the affected area shall be removed to the substrate or to the previous sound coat, feathered into the sound coat and recoated to the specified thickness.

"INFORMATION ONLY"

6.13.4 Inorganic zinc coating shall be free of over spray.

6.13.4.1 For epoxy or materials other than inorganic zinc, if the coated surfaces have tightly adhering over spray which is decontaminable after the final coat, it may remain.

6.13.5 Areas determined by the CDE that cannot be coated due to inaccessibility shall be documented on a Design Change Form (DCF). The DCF shall be referenced on the applicable IR/PVR noting the location, item identification, and surface area and forwarded for Design Engineering evaluation in accordance with applicable procedure requirements.

6.13.6 Pinholes and craters that penetrate to the substrate as seen by the naked eye or are detected by an Electrical Holiday Test are unacceptable.

6.13.7 Orange peel is acceptable unless coupled with dry over spray.

6.14 Document/Form Processing

6.14.1 The Inspection Record, Attachment (-1) and the Peer Verification Record, Attachment (-6), shall be initiated by the CDE/QCE as applicable and processed in accordance with CMP 10.1.1, Inspection and Test Control.

6.14.2 The Holiday Test Report, Attachment (-2) shall be initiated by the CDE and/or QCE and is used to document coating activities associated with Corrosion Protected Underground Piping. The record shall be completed in accordance with Attachment (-2a). The record shall remain with the WP until completion of work activities. A copy of the record should remain with the WP and the original shall be attached to the Inspection Record, Attachment (-1), or Peer Verfication Record, Attachment (-6), as a supplemental record.

6.15 Inspection Record Preparation

6.15.1 Inspection Records, Attachment (-1) and Peer Verification Records, Attachment (-6) when coating facility items shall be scoped to no more than that portion of a facility represented by a design drawing (e.g., structural steel framing, concrete walls and slabs, exterior of a building or a specific room). When coating a specific commodity (e.g., pipe line, support, equipment, etc.), the record shall be scoped using the requirements specified within the specific CMP.

6.15.2 Supplemental records required to substantiate the inspections performed and/or quality of the completed installation shall be attached to the IRs, Attachments (-1) and (-6) and be processed in accordance with Section 7.0.

7.0 DOCUMENTATION

7.1 Documents generated which provide objective evidence that the requirements of this procedure have been verified, accepted, or certified are QA Records and shall be processed in accordance with CMP 10-1.7, BSRI Construction Control of Quality Assurance Records. These records shall be transmitted to WSRC-PRC for retention in accordance with E&PD Records Inventory and Disposition Schedule (RIDS) and CMP 01-1.13, Records Management Plan (e.g., inspection records, test records, marked-up drawings, etc.).

7.2 Documents generated to show evidence that an activity was performed in accordance with the applicable procedure requirements or to support construction activities but do not provide verification and acceptance criteria are classified as "non-permanent records". These documents shall be retained by the originating organization until dispositioned in accordance with E&PD Records Inventory and Disposition Schedule (RIDS) and CMP 01-1.13, Records Management Plan (e.g., checklists, logs, etc.).

"INFORMATION ONLY"

8.0 ATTACHMENTS

8.1 CMP 03-2.6-1 Inspection Record for Protective Coatings

8.2 CMP 03-2.6-2 Holiday Test Report

-2a Instructions

8.3 CMP 03-2.6-3 Deleted

8.4 CMP 03-2.6-4 Deleted

8.5 CMP 03-2.6-5 Holiday Detector Operation and Use

8.6 CMP 03-2.6-6 Peer Verification Record for Protective Coatings

8.7 CMP 03-2.6-7 Inspection Record Continuation Sheet for Protective Coatings

PROTECTIVE COATINGS

ATTACHMENT CMP 03-2.6-1
INSPECTION RECORD FOR
PROTECTIVE COATINGS
(TYPICAL)
PAGE 1 OF 2

Nuclear Safety ☐ Critical Protection ☐ Production Support ☐ General Services ☐

CMP 03-2.6-1
ASR 36-115 (10/28/93)
PAGE 1 OF 2

CIP No. _____

1. Inspection Record for Protective Coatings

2a. CMP No. 03-2.6 Rev. _____

2b. IR No. _____

2c. Page ___ of ___

3. Item(s) _____

2.
WP No. _____
I.R. Log No. _____
DA No. _____

4. Scope/Location _____

5. Reference Criteria Spec: _____ Coating System: _____

6. Prepared by _____ Date _____ 7. Reviewed by _____ Date _____

8. Act. No.	9. Description Prime (P) Intermediate (I) Final (F)	Design Categories / 10. Insp. Code	11.	12. Item(s) Acceptance CDE/Date NS	CP	PS	GS	QCE/Date NS	CP	PS	GS
1.0	PREREQUISITES										
1.1	Verify reference criteria is correct, complete and/drawing revisions are current.			R	R	R	R	R	R		
1.2	Review for any open NCRs that may affect scope of work.			R	R	R	R	R	R		
1.3	Fabrication/Installation IR reviewed for item readiness prior to coating.					R	R	R	R		
2.0	IN-PROCESS INSPECTION ACTIVITIES										
2.1	Surface Preparation			S	S	I	S	I	I		
	A. Surfaces are in accordance with the requirements of the coating applied. Surfaces are clean, have proper profile, free of defects, masked as required, environmental conditions as specified, and plastic sheet test acceptable for concrete.			P ____ I ____ F ____				P ____ I ____ F ____			
	B. Abrasives used are clean, dry and acceptable for the type of surface prepared.					S		S	S		
	C. Air used for blast cleaning is oil free and dry, air is checked initially and every four hours during use.					S	S	I	S		
2.2	Coating Application			S	S	S	S	I	S		
	A. Environmental conditions and blotter tests are as specified for coating system applied			P ____ I ____ F ____				P ____ I ____ F ____			
	B) Coating Material is as specified; Mix time, induction time, pot life, shelf life acceptable, and thinner used is compatable. Manufacturer _____ Type _____			S	S	S	S	I	S		
				P ____ I ____ F ____				P ____ I ____ F ____			

PROTECTIVE COATINGS

ATTACHMENT CMP 03-2.6-1
INSPECTION RECORD FOR
PROTECTIVE COATINGS
(TYPICAL)
PAGE 2 OF 2

IR No. _____ Page ___ of ___

CMP 03-2.6-1
ASR 36-115 (10/28/91)
PAGE 2 OF 2

8. Act. No.	9. Description	Design Categories / 10. Insp. Code	11.	12. Item(s) Acceptance CDE/Date NS	CP	PS	GS	QCE/Date NS	CP	PS	GS
2.0	IN-PROCESS INSPECTION ACTIVITIES										
2.2	C) Corners, sharp edges, and welds are stripe coated as required.			S	S	S		I	S		
	D) Inner coat wet/dry film thickness, cure, and surface conditions are acceptable.			S	S	I	S	I	I		
				P _____ I _____				P _____ I _____			
3.0	FINAL INSPECTION ACTIVITIES										
3.1	Final coat cured as specified, demasking complete, and coating can be handled.			S	S	I	I	I	I		
3.2	Final film thickness acceptable, and final surface is free of defects or damage.			S	S	I	I	I	I		
3.3	Holiday testing is performed as required.			S	S	T	T	T	T		
4.0	SUPPLEMENTARY RECORDS										
4.1	Holiday Test Report					R	R	R	R		
5.0	EXCEPTIONS										
5.1 OR	No open exceptions noted.			R	R	R	R	R	R		
5.2	Indicated open exceptions are described in 'Remarks' section.			R	R	R	R	R	R		

13. Remarks

CDS No. _____ EXP. Date. _____
CDS No. _____ EXP. Date. _____
CDS No. _____ EXP. Date. _____
CDS No. _____ EXP. Date. _____

Completed Inspection Record
Reviewed and Accepted by _____ Date _____

PROTECTIVE COATINGS

1.
IR# _____

CMP 03-2.6-2
ASK 36-116 (10/28/91)
PAGE 1 OF 1

HOLIDAY TEST REPORT

PAGE ___ OF ___

2. LINE OR ITEM TESTED _____

3. LOCATION _____

4. TYPE OF COATING _____ 5. DATE TESTED _____

6. TYPE OF MATERIAL COATED _____

7. SPECIFIED VOLTAGE _____

8. ☐ ACCEPT ☐ REJECT

9. LOCATION OF REJECT(S) _____

10. RETEST ☐ ACCEPT ☐ REJECT DATE RE-TESTED _____

11. REMARKS

CDS No. _____ Expiration Date _____

CDS No. _____ Expiration Date _____

CDS No. _____ Expiration Date _____

12. _____
ACCEPTED BY DATE

13. _____
REVIEWED BY DATE

PROTECTIVE COATINGS

BLOCK No.	RESPONSIBILITY	DESCRIPTION
1.	CDE/QCE	Enter applicable IR No.
2.	CDE/QCE	Identify item tested.
3.	CDE/QCE	Enter location of item (Note: Where it is going to be used not just shop or field.
4.	CDE/QCE	Type of coating used.
5.	CDE/QCE	Enter date of test.
6.	CDE/QCE	Enter type of material (i.e., size, thickness grade, ASTM ID or other).
7.	CDE/QCE	Enter required Voltage.
8.	CDE/QCE	Accept, Reject.
9.	CDE/QCE	Enter location of reject (i.e., spool number location on pipe).
10.	CDE/QCE	Retest accept, reject date retested.
11.	CDE/QCE	Enter any applicable comments associated with the testing.
12.	CDE/QCE	Enter signature and date to signify acceptance.
13.	Reviewer CDE/QCE	The responsible CDE or a Level II QCE shall review and sign off the record to signify completeness and acceptance of the recorded data.

"INFORMATION ONLY"

PROTECTIVE COATINGS

DELETED

PROTECTIVE COATINGS

DELETED

"INFORMATION ONLY"

1.0 GENERAL:

1.1 Electrical Inspection (Holiday Detection) is a test of the continuity of a protective coating. This type of inspection does not provide information concerning coating resistance, bond, physical characteristics, or the over all quality of the coating, nor is it intended to do so. It will detect bubble or blister type voids, cracks, thin spots and foreign inclusions or contaminants in the coating that are of such size, number or conductivity as to signify lower the electrical resistance or dielectric strength of the coating.

1.2 Electrical Holiday Detector: A device for locating discontinuities in the coating.

1.3 Unless specified as an inspection requirement, use of a Holiday Detector should be at the discretion of the coating inspector. An initial holiday inspection, performed as soon after the application of the coating as practicable, serves to check the materials and the application procedures. A final coating inspection, before the coated pipe is placed in the ditch, will disclose any defect or damage to the coating, except disbonding, which has occurred during the construction period.

1.4 This recommended practice presents acknowledged techniques in the use of Holiday Detector equipment currently used on pipeline coatings prior to lowering in operations.

2.0 GROUNDING:

2.1 Grounding both the pipe metal and the ground terminal of the Holiday Detector is necessary to complete the circuit. This may be done through a direct wire connection or by connecting both to earth as a common ground. The pipe metal, if not in contact with the earth, is usually connected to the earth by a driven ground rod or metal pin. The Holiday Detector can, in most cases, be effectively grounded by the use of a flexible bare wire of approximately 9.14m (30 feet) in length which is connected to the ground terminal of the holiday detector and trailed along the earth surface.

2.2 In arid, sandy, or rock areas of high electrical resistivity, a direct wire connection between the pipe metal and detector ground terminal shall be maintained.

3.0 EXPLORING ELECTRODE:

3.1 The electrode is the means by which the electrical potential is applied to the surface of the coating.

3.2 The construction of the electrode shall be such that there will be no more than 10 mils lateral distance between the points where the electrode contacts the coated surface for each 1000 volts of testing potential.

3.3 The electrode shall maintain contact with the coated surface at all times.

3.4 The electrode should not adversely distort the coating.

3.5 The electrode should not be moved back and forth excessively on a soft coating in order to prevent a decrease in the coating thickness.

3.6 The electrode should always be in motion whenever the testing voltage is applied.

4.0 SPEED OF TRAVEL:

4.1 Pulse Type Detector: The pulse rate should be considered in determining the speed of travel of the electrode over the coated surface. Higher pulse rates will allow a higher speed of travel.

4.2 Non-Pulse Type Detector: The speed of travel is limited by the mechanics of application and the response time of the detector.

4.3 The proper travel speed for a particular set of conditions can be determined by making "Holidays" in a sample and attempting to detect the "Holidays" at various electrode travel speeds.

5.0 CONDITION OF COATING SURFACE:

5.1 Excessive moisture or any electrically conductive material in or on the surface of the coating system can cause appreciable leakage currents which may lower the effective test voltage or cause erroneous "Holiday" indication. Drying and cleaning of the coated surface may be necessary.

5.2 Any surface condition that causes in the distance between the electrode and the metal must be corrected (see sections 3.3 and 6.2).

6.0 CARE OF EQUIPMENT:

6.1 All parts of the Holiday Detector shall be kept clean and free of moisture at all times.

6.2 The electrode shall be kept free of coating material and in such mechanical condition to maintain contact with the coated surface at all times.

6.3 All electrical contacts shall be kept clean and free of corrosion.

6.4 Trailing ground wire shall be kept free of coating material and in such condition to maintain contact with the earth. The ground wire shall be of sufficient length to assure proper grounding (see Paragraph 2.1).

6.5 Batteries shall be maintained in accordance with manufacturer's recommendations.

6.6 Test meter batteries and zero setting shall be maintained in accordance with the manufacturer's specification.

PROTECTIVE COATINGS

ATTACHMENT CMP 03-2.6-6
PEER VERIFICATION RECORD
FOR PROTECTIVE COATINGS
(TYPICAL)
PAGE 1 OF 2

CMP 03-2.6
ASR 56-021a (10/29/91)
Page 1 of 2

1. CMP 03-2.6 Rev. _____ 1a. PEER VERIFICATION RECORD FOR PROTECTIVE COATINGS
2. Page 1 of _____

6. IR NUMBER

YR/IRIS	AREA	PROJ/AMO	RECORD ID CODE	FILE ID	SEQ.
9 IRIS					

3. DESIGN CLASSIFICATION ☐ PS ☐ GS
4. WP No. _____
5. IR Log No. _____
7. Scope / Location _____
8. CIP No. _____
9. Prepared by: _____
10. DA _____
11. Ref. Criteria _____

12. ITEM IDENTIFICATION
13. Installed by / Quantity
14. Coating System _____
14a. Manufacturer _____

"INFORMATION ONLY"

15. ATTRIBUTES

Prime (P)	Intermediate (I) Final (F)	PS	GS	16.
1.1	Verify reference criteria	R	R	
1.2	Review for any open NCRs	R	R	
1.3	Installation IR reviewed for item readiness prior to coating.	R	R	
2.1	A. Surface preparation as specified for coating applied. Surfaces are clean, defect free, masked, and have proper profile.	I	S	P ____ I ____ F ____
	B. Environmental conditions are as specified, and plastic sheet test acceptable for concrete.	I	S	P ____ I ____ F ____
	C. Abrasives are clean, dry, and properly sized. Blast air is oil free, dry and checked initially and every 4 hours.	S	S	
2.2	A. Coating Application: Check environmental conditions and blotter tests.	S	S	P ____ I ____ F ____
	B. Coating material as specified: mix/induction time, pot life, thinner acceptable.	S	S	P ____ I ____ F ____
	C. Corners, sharp edges, and welds are stripe coated as required.	S		
	D. Inner coat film thickness, cure, and surface conditions acceptable.	I	S	P ____ I ____
3.1	Final coat as specified, demasking complete, and coating can be handled.	I	I	
3.2	Final film thickness acceptable, and final surface is free of defects or damage.	I	I	
3.3	Holiday testing is performed as required.	T	T	
4.1	Review of Supplemental Records identified in Block #18.	R	R	
5.1	No open exceptions noted, or	R	R	
5.2	Indicated open exceptions are described in "Remarks" section	R	R	

17. REMARKS
M&TE:
Item No. _____
CDS ____ Due Date ____
Item No. _____
CDS ____ Due Date ____
Item No. _____
CDS ____ Due Date ____

18. SUPPLEMENTAL RECORDS
1. Holiday Test Report

19. Completed Peer Verification Record Reviewed and Approved By _____ Date _____

PROTECTIVE COATINGS

ATTACHMENT CMP 03-2.6-6
PEER VERIFICATION RECORD
FOR PROTECTIVE COATINGS
(TYPICAL)
PAGE 2 OF 2

1. CMP 03-2.6 REV. ____

1a. PEER VERIFICATION RECORD FOR PROTECTIVE COATINGS

2. Page ___ of ___

(Continuation Sheet)

6. IR NUMBER

YRIR15	AREA	PROJ / AMO	RECORD ID CODE	FILE ID	SEQ.
9 IR15					

15. ATTRIBUTES	12. ITEM ID	12. ITEM ID	12. ITEM ID	12. ITEM ID
	13. Installed by / Quantity	13. Installed by / Quantity	13. Installed by / Quantity	13. Installed by / Quantity
	14. Coating System Manufacturer	14. Coating System Manufacturer	14. Coating System Manufacturer	14. Coating System Manufacturer
	16. CDE / Date	16. CDE / Date	16. CDE / Date	16. CDE / Date
1.1				
1.2				
1.3				
2.1A	F ____ I ____ F ____	F ____ I ____ F ____	F ____ I ____ F ____	F ____ I ____ F ____
2.1B	F ____ I ____ F ____	F ____ I ____ F ____	F ____ I ____ F ____	F ____ I ____ F ____
2.1C			F ____ I ____ F ____	F ____ I ____ F ____
2.2A	F ____ I ____ F ____	F ____ I ____ F ____	F ____ I ____ F ____	
2.2B	F ____ I ____ F ____	F ____ I ____ F ____		F ____ I ____ F ____
2.2C			F ____ I ____ F ____	F ____ I ____ F ____
2.2D	F ____ I ____	F ____ I ____	F ____ I ____	F ____ I ____
3.1				
3.2				
3.3				
4.1				
4.1				
4.2				

Last

PROTECTIVE COATINGS

ATTACHMENT CMP 03-2.6-7
INSPECTION RECORD
CONTINUATION SHEET FOR
PROTECTIVE COATINGS
(TYPICAL)
PAGE 1 OF 1

INSPECTION RECORD CONTINUATION SHEET FOR
PROTECTIVE COATINGS

2c. Page ___ of ___

2b. IR NUMBER

8. Activity No.	3. Item ID		3. Item ID		3. Item ID	
	CDE/Date	QCE/Date	CDE/Date	QCE/Date	CDE/Date	QCE/Date
1.1						
1.2						
1.3						
2.1A	P ___ I ___ F ___	P ___ I ___ F ___	P ___ I ___ F ___	P ___ I ___ F ___	P ___ I ___ F ___	___ I ___ F ___
2.1B						
2.1C						
2.2A	P ___ I ___ F ___	P ___ I ___ F ___	P ___ I ___ F ___	P ___ I ___ F ___	___ I ___ F ___	P ___ I ___ F ___
2.2B	P ___ I ___ F ___	P ___ I ___ F ___	P ___ I ___ F ___	P ___ I ___ F ___	P ___ I ___ F ___	P ___ I ___ F ___
2.2C						
2.2D	P _____ I _____	P _____ I _____	P _____ I _____	P _____ I _____	P _____ I _____	P _____ I _____
3.1						
3.2						
3.3						
4.1						
5.1						
5.2						

"INFORMATION ONLY"

"INFORMATION ONLY"

WESTINGHOUSE SAVANNAH RIVER COMPANY

INTER-OFFICE MEMORANDUM

ESH-ESS-93-0162

March 16, 1993

To: K. S. Wierzbicki, 742-6G

W. L. Payne

From: W. L. Payne, 742-A
(x5-9002)

SCECB APPROVAL OF TANK FARM CERTIFIED OPERATOR COVERAGE (U)

Ref: Letter, J. L. Keyes to L. E. Arrington and W. R. Moore, February 22, 1993

Based upon the attached letter, Waste Management Operations should consider their plan for Certified Operator coverage at the Tank Farm approved. Please ensure that the plan is implemented in a timely manner, as described in the referenced letter.

To date, a similar letter has not been received from SCDHEC; however, L. E. Arrington verbally agreed with the proposal but deferred this decision to the SCECB on February 24, 1993. If written confirmation is received from SCDHEC, a copy will be forwarded to you at that time.

If you have any questions, please call me at extension 5-9002.

WLP:pmf
Attachment

CC: A. B. Gould, DOE-SR, 703-41A

State of South Carolina

ENVIRONMENTAL CERTIFICATION BOARD

PHONE 734-9140

2221 DEVINE STREET, SUITE 320
COLUMBIA, SC 29205

March 8, 1993

J. L. Keyes
Enviornmental Protection Department
Westinghouse Savannah River Company
PO Box 616
Aiken, SC 29807

Dear Mr. Keyes:

Our agency finds acceptable the plan as covered in your letter of February 22, 1993 regarding operator coverage of the Tank Farm Wastewater Treatment Facilities (permit #17,424 - IW). It is our understanding that each shift in each area will be supervised by a certified operator and that an "A" level operator will be available to each if required.

Please contact my office if you need additional information regarding this matter.

Sincerely,

William R. Moore

WRM/gdp

W-0517 3

Letter to K. S. Wierzbicki
ESH-ESS-93-0162
March 16, 1993

BCC: J. D. Arnett, 703-41A
J. E. Bolen, 703-41A
H. L. Davis, 703-41A
G. T. Wright, 703-H
M. D. Dukes, 742-A
S. S. Cathey, 703-H
C. B. Stevens, 742-6G
A. R. Gough, 992-3W, Rm. 8
W. L. Payne, 742-A
B. R. James, CCC-2, Rm. 221
M. A. Hunter, 742-6G
C. R. Hayes, 703-18A
Records Administration, 773-52A
EPD File, 742-A

W-0517

\

INTER-OFFICE MEMORANDUM
Savannah River Site

Date: 10-Mar-1993 04:53pm EST
From: Public Relations
PUBLIC_RELATIONS AT A1 AT SLSRP1
Dept: PUBLIC RELATIONS
Tel No: 46205

TO: See Below

Subject: HLW RESTARTS 1H EVAPORATOR; ITP FILTER TEST COMPLETE (U)

At 4 p.m. on Monday, March 8, High Level Waste's (HLW) 1H Evaporator was restarted. The 1H Evaporator will provide the tank space necessary to support HLW operations, as well as the future startup of the Defense Waste Processing Facility (DWPF). The evaporator had not been operational since November 1988, to upgrade the physical condition of the evaporator system.

The HLW team -- consisting of people from across the Site -- worked many long hours to make this significant accomplishment. The employees involved in this restart effort demonstrated impressive dedication and commitment.

HLW also reached another major milestone this week: on Wednesday, March 10, In-Tank Precipitation (ITP) filter testing was successfully completed. ITP is targeted to go into operation late this year to support the startup of DWPF; it will provide feed from the sludge tanks to DWPF and Saltstone. The next major milestone for ITP and the related Extended Sludge Processing will be benzene stripper testing in mid-April.

Distribution:

TO: SUBSCRIBERS: @A1 @SLTNOA
TO: SUBSCRIBERS: @A1 @SANCHA
TO: SUBSCRIBERS: @A1 @SASRS2
TO: SUBSCRIBERS: @A1 @TCWSI1
TO: SUBSCRIBERS: @A1 @SLSRP1
TO: SUBSCRIBERS: @A1 @SRXSS2
TO: DOE Employee Communications (DOE_EMPLOYEE @A1@SASRS3)

W-0517

State of South Carolina

ENVIRONMENTAL CERTIFICATION BOARD

PHONE 734-9140

2221 DEVINE STREET, SUITE 320
COLUMBIA, SC 29205

March 8, 1993

"INFORMATION ONLY"

J. L. Keyes
Enviornmental Protection Department
Westinghouse Savannah River Company
PO Box 616
Aiken, SC 29807

Dear Mr. Keyes:

Our agency finds acceptable the plan as covered in your letter of February 22, 1993 regarding operator coverage of the Tank Farm Wastewater Treatment Facilities (permit #17,424 - IW). It is our understanding that each shift in each area will be supervised by a certified operator and that an "A" level operator will be available to each if required.

Please contact my office if you need additional information regarding this matter.

Sincerely,

William R. Moore

WRM/gdp

OSR 3-4A-W (Rev1-89)

W-0517

WESTINGHOUSE SAVANNAH RIVER COMPANY

INTER-OFFICE MEMORANDUM

ESH-FSS-93-0130

March 4, 1993

TO: B. DAMANI, 704-15S

FROM: C. R. HAYES, 703-18A
(X5-8838)

C R Hayes

SCDHEC PERMIT TO OPERATE #17,424-IW; H-S AREA INTERAREA TRANSFER LINE (U)

Attached is a copy of SCDHEC Partial Permit-to-Operate #17,424-IW for the subject facility. The permit is referred to as partial because a separate permit was issued for the Tank Farm facilities. The Tank Farm permit-to-operate is being forwarded to Waste Management. Please note that the Auxiliary Pump Pit (APP) is not approved under this permit. A final inspection is required before the permit for the APP can be issued.

Please notice the six (6) special conditions included in the permit. With regard to Special Condition #3, the Site Best Management Practices Plan must be updated by 9/3/93 to include any IAL facilities that are not included in the current DWPF plan. If there are any concerns with any of the six conditions, please contact me.

Please ensure that you are currently complying and will continue to comply with the permit special conditions and commitments made in the permit application package. If there are any questions, contact me.

CRH:pr
Attachment

CC: w/ attachment
P. C. Carroll, 742-A
S. J. Carroll, 742-A
S. S. Cathey, 703-H
J. W. Cook, 742-A
L. S. Coward, 703-18A
P. D. d'Entremont, 703-H
M. D. Dukes, 742-A
W. D. Dunaway, 703-18A
T. P. Gaughan, 241-152H
A. R. Gough, 992-3W
M. Hawkins, 742-A
J. L. Keyes, 742-A
B. L. Lewis, 703-H
J. F. Ortaldo, 704-S
W. J. Maloney, 742-A
J. V. Odum, 742-A
W. L. Payne, 742-A
J. A. Pike, 703-H
J. S. Roberts, 742-A
R. M. Satterfield, 719-4A
G. F. Stejskal, 742-A
C. B. Stevens, 742-6G
K. S. Wierzbicki, 742-6G
K. Z. Wolf, 704-15S
G. T. Wright, 241-120H
Records Administration, 773-52A
EPD Fileroom, 742-A

South Carolina
DHEC
Department of Health and Environmental Control
2600 Bull Street, Columbia, SC 29201

Interim Commissioner: Thomas E. Brown, Jr.

Board: John H. Burriss, Chairman
Richard E. Jabbour, DDS, Vice Chairman
Robert J. Stripling, Jr. Secretary

William E. Applegate, III,
Toney Graham, Jr., MD
Sandra J. Molander
John B. Pate, MD

Promoting Health, Protecting the Environment

PARTIAL PERMIT TO OPERATE

March 3, 1993

Westinghouse Savannah River Company
P. O. Box 616
Aiken, South Carolina 29802

Re: Project: F and H-Area High Level Radioactive Waste Tank Farms
Construction Permit No.: 17,424-IW
County: Aiken and Barnwell

Dear Sirs:

Based on a final construction inspection conducted by Jeff Chapman on 2-26-93, this office does hereby authorize the line between H-Area facility and DWPF, the low point pump pit (LPPP) associated with this line, and associated pumps and appurtenances.

Special Conditions: The special conditions are on pages 2 and 3 of this Permit to Operate.

If there are any questions concerning this project, please contact this office at 641-7670.

Yours truly,

Jeff W. Chapman

Jeff W. Chapman
District Engineer
Lower Savannah District
Environmental Quality Control

JWC:chp

cc: Danny Dunaway, Westinghouse
A. B. Gould, DOE
Industrial Wastewater Division, SCDHEC

SPECIAL CONDITIONS

1. The permittee shall maintain at each permitted facility a complete Operations and Maintenance Manual for the waste treatment system. The manual shall contain operation and maintenance instructions for all equipment and appurtenances associated with the waste treatment system. The manual shall contain a general description of the treatment process(es), operating characteristics that will produce maximum treatment efficiency and corrective action to be taken should operating difficulties be encountered.

2. The permittee shall provide for the performance of routine daily treatment plant inspections by a certified operator of the appropriate grade. The inspections shall include, but are not limited to, areas which require a visual observation to determine efficient operations and for which immediate corrective measures can be taken using the O & M Manual as a guide. All inspections shall be recorded and shall include the date, time and name of person making the inspection, corrective measures taken, and routine equipment maintenance, repair, or replacement performed. The permittee shall maintain all records of inspections at the permitted facility and the records shall be made available for on-site review during normal working hours.

3. The permittee shall develop and implement a Best Management Practice (BMP) Plan to identify and control the discharge of significant amounts of oils and the hazardous and toxic substances listed in 40 CFR Part 117 and Tables II and III of Appendix D to 40 CFR Part 122. The plan shall include a listing of all potential sources of spills or leaks of these materials, a method for containment, a description of training, inspection and security procedures, and emergency response measures to be taken in the event of a discharge to surface waters or plans and/or procedures which constitute an equivalent BMP. Sources of such discharges may include materials storage areas: in-plant transfer, process and materials handling area; loading and unloading operations; plant site runoff; and sludge and disposal areas. The BMP Plan shall be developed, and updated as necessary, in accordance with good engineering practices, shall be documented in narrative form, and shall include any necessary plot plans, drawings, or maps. The BMP Plan shall be developed no later than six months after issuance of the final permit (or modification), shall be implemented no later than one year after issuance of the final permit or modification).

SPECIAL CONDITIONS (cont'd)

A Spill Prevention Control and Countermeasure (SPCC) plan may be used in lieu of a BMP plan if BMP requirements are satisfied. The BMP plan or its equivalent shall be maintained at the plant site and shall be available for inspection by EPA and Department personnel.

4. The permittee shall maintain contingency plans or emergency procedures in place to respond to any known emergency situation with the potential to negatively impact human health or the environment. The plans and/or procedures shall be updated as necessary to include new information or changing conditions.

5. On June 30, 1987, the permittee submitted a revised RCRA Part A permit application which included the high-level radioactive waste tank system(s) contained in this permit. After this office issues the wastewater construction and operating permits for this facility, the permittee should amend its RCRA Part A permit to delete the tank system(s).

6. This permit is being issued after review and approval of a construction permit application submitted to the State of South Carolina pursuant to the requirements of a Federal Facilities Agreement (FFA) entered into by the United States Department of Energy (the permittee), the United States Environmental Protection Agency, and the State of South Carolina on January 15, 1993. In addition to the conditions specifically stated in this permit, the permittee shall be subject to all applicable requirements of Section IX, including referenced appendices, of the FFA.

R 3-4A-W (Rev1-89)

WESTINGHOUSE SAVANNAH RIVER COMPANY

INTER-OFFICE MEMORANDUM

W0577

ESH-FSS-93-0129

March 4, 1993

TO: M. A. HUNTER, 742-6G

FROM: C. R. HAYES, 703-18A
(X5-8838)

SCDHEC PERMIT TO OPERATE #17,424-IW; F AND H-AREA HIGH-LEVEL RADIOACTIVE WASTE TANK FARMS (U)

Attached is a copy of SCDHEC Partial Permit-to-Operate #17,424-IW for the subject facilities. The permit is referred to as partial because a separate permit was issued for the H-S Interarea Transfer Line (IAL). The IAL permit-to-operate is being forwarded to DWPF-Environmental.

Please notice that the same twelve (12) special conditions are repeated from the construction permit. With regard to Special Condition #3, the Site Best Management Practices Plan must be updated by 9/3/93 to include the In-Tank Precipitation cold feeds area and any other applicable Tank Farm facilities that are not included in the current plan. Special Condition #8 requires the submittal of procedures used during installation of the liner extension within the ITP hold tank area by 3/26/93. I have received this information and will submit it to SCDHEC prior to the required date. Also note that construction of the 242-25H Evaporator must be completed prior to 1/1/98. Any 242-25H schedule changes must be approved by DHEC. If there are any concerns with any of the twelve conditions, please contact me.

Please ensure that you are currently complying and will continue to comply with the permit special conditions and commitments made in the permit application package. If there are any questions, contact me.

CRH:pr
Attachment

CC: w/ attachment

P. C. Carroll, 742-A
S. J. Carroll, 742-A
S. S. Cathey, 703-H
J. W. Cook, 742-A
L. S. Coward, 703-18A
P. D. d'Entremont, 703-H
M. D. Dukes, 742-A
W. D. Dunaway, 703-18A
T. P. Gaughan, 241-152H
A. R. Gough, 992-3W
M. Hawkins, 742-A
J. L. Keyes, 742-A
B. L. Lewis, 703-H
W. J. Maloney, 742-A
J. V. Odum, 742-A
W. L. Payne, 742-A
J. A. Pike, 703-H
J. S. Roberts, 742-A
R. M. Satterfield, 719-4A
G. F. Stejskal, 742-A
C. B. Stevens, 742-6G
K. S. Wierzbicki, 742-6G
K. Z. Wolf, 704-15S
G. T. Wright, 241-120H
Records Administration, 773-52A
EPD Fileroom, 742-A

South Carolina
DHEC
Department of Health and Environmental Control
2600 Bull Street, Columbia, SC 29201

Interim Commissioner: Thomas E. Brown, Jr.

Board: John H. Burriss, Chairman
Richard E. Jabbour, DDS, Vice Chairman
Robert J. Stripling, Jr. Secretary

William E. Applegate, III,
Toney Graham, Jr., MD
Sandra J. Molander
John B. Pate, MD

Promoting Health, Protecting the Environment

2

PARTIAL PERMIT TO OPERATE

March 3, 1993

Westinghouse Savannah River Company
P. O. Box 616
Aiken, South Carolina 29802

Re: Project: F and H Area High Level Radioactive Waste Tank Farms
Construction Permit No.: 17,424-IW
County: Aiken and Barnwell

Dear Sirs:

Based on a final construction inspection conducted by Jeff Chapman on 2-26-93, this office does hereby authorize the F/H Area High-Level Radioactive Tank Farm to be placed into operation (the description of the F/H Area High-Level Radioactive Tank Farm is located on page 2 of this Permit to Operate).

Special Conditions: The special conditions applicable to the F/H Area High-Level Radioactive Tank Farm are located on pages 3 and 4 of this Permit to Operate.

If there are any questions concerning this project, please contact this office at 641-7670.

Yours truly,

Jeff W. Chapman

Jeff W. Chapman
District Engineer
Lower Savannah District
Environmental Quality Control

JWC:chp

cc: Danny Dunaway, Westinghouse
A. B. Gould, DOE
Industrial Wastewater Division, SCDHEC

Environmental Quality Control Office, Lower Savannah District
George P. Nelson Building
218 Beaufort Street NE, Aiken, SC 29801 (Phone 641-7670 Fax 641-7675)

printed on recycled paper

Project Description

The construction of two wastewater storage and treatment facilities and associated transfer systems, one in F-Area the other in H-Area, designed to treat wastewater generated at the F-Area Separations Facility, H-Area Separations Facility, Equipment Decontamination/Repair Facility, F/H Effluent Treatment Facility, Defense Waste Processing Facility, Receiving Basin for Offsite Fuels and Resin Regeneration Facility, and SRL Laboratory. The treatment facilities will also receive reactor filter backwash, incidental wastes, and process chemicals.

The F-Area facility consists of the following equipment:

1. 22 tanks, eight (8) of which are 750,000 gal Type I tanks (numbers 1-8), ten (10) 1,300,000 gal Type III/IIIA tanks (numbers 25-28, 33-34, and 44-47), and four (4) 1,300,000 gal Type IV tanks (numbers 17-20).
2. Two evaporator systems (242-F and 242-16F) each of which consists of an evaporator, condenser, mercury collection tank, cesium removal pump tank and column, overheads hold tanks, and overheads diverting tank (242-F only). The 242-F evaporator system also contains a waste concentrate transfer system.
3. Six (6) diversion boxes (FDB1, FDB2, FDB3, FDB4, FDB5, FDB6)
4. Three (3) pump pits (FPP1, FPP2, FPP3)
5. Associated tanks, pumps, and piping.

The H-Area facility consists of the following equipment:

1. 27 tanks, four (4) of which are 750,000 gal Type I tanks (numbers 9-12), three (3) are 1,030,000 gal Type II tanks (numbers 13-15), sixteen (16) 1,300,000 gal Type III/IIIA tanks (numbers 29-32, 35-43, 48, 49, and 51), and four (4) 1,300,000 gal Type IV tanks (numbers 21-24).
2. Two evaporator systems (242-H and 242-16H) each of which consists of an evaporator, condenser, mercury collection tank, cesium removal pump tank and column, and overheads hold tanks. The 242-H evaporator system also contains a waste concentrate transfer system.
3. Eight (8) diversion boxes (HDB1, HDB2, HDB3, HDB4, HDB5, HDB6, HDB7, HDB8)
4. Ten (10) pump pits (HPP1, HPP2, HPP3, HPP4, HPP5, HPP6, HPP7, HPP8, HPP9, HPP10)
5. In-Tank Precipitation Process consisting of:
   a. Two (2) Cross flow filters
   b. One (1) precipitate stripper column
   c. One (1) wash stripper column
   d. Two (2) hold tanks
6. Associated tanks, pumps, and piping.

This permit also includes the transfer line between the F-Area and H-Area facilities.

SPECIAL CONDITIONS

1. The permittee shall maintain at each permitted facility a complete Operations and Maintenance Manual for the waste treatment system. The manual shall be made available for on-site review during normal working hours. The manual shall contain operation and maintenance instructions for all equipment and appurtenances associated with the waste treatment system. The manual shall contain a general description of the treatment process(es), operating characteristics that will produce maximum treatment efficiency and corrective action to be taken should operating difficulties be encountered.

2. The permittee shall provide for the performance of routine daily treatment plant inspections by a certified operator of the appropriate grade. The inspections shall include, but are not limited to, areas which require a visual observation to determine efficient operations and for which immediate corrective measures can be taken using the O & M manual as a guide. All inspections shall be recorded and shall include the date, time and name of person making the inspection, corrective measures taken, and routine equipment maintenance, repair, or replacement performed. The permittee shall maintain all records of inspections at the permitted facility and the records shall be made available for on-site review during normal working hours.

3. The permittee shall develop and implement a Best Management Practices (BMP) plan to identify and control the discharge of significant amounts of oils and the hazardous and toxic substances listed in 40 CFR Part 117 and Tables II and III of Appendix D to 40 CFR Part 122. The plan shall include a listing of all potential sources of spills or leaks of these materials, a method for containment, a description of training, inspection and security procedures, and emergency response measures to be taken in the event of a discharge to surface waters or plans and/or procedures which constitute an equivalent BMP. Sources of such discharges may include materials storage areas; in-plant transfer, process and material handling areas; loading and unloading operations; plant site runoff; and sludge and waste disposal areas. The BMP plan shall be developed, and updated as necessary, in accordance with good engineering practices, shall be documented in narrative form, and shall include any necessary plot plans, drawings, or maps. The BMP plan shall be developed no later than six months after issuance of the final permit (or modification), shall be implemented no later than one year after issuance of the final permit (or modification). A Spill Prevention Control and Countermeasure (SPCC) plan may be used in lieu of a BMP plan if BMP requirements are satisfied. The BMP plan or its equivalent shall be maintained at the plant site and shall be available for inspection by EPA and Department personnel.

4. No chemicals (process or otherwise) shall be added to the waste tanks which will alter the composition of the F/H ETF effluent from that which was evaluated for the NPDES permit.

5. The addition (not replacement) of new piping and chemical feed systems, even though related to the F/H Tank Farm process, shall not be considered normal operation if the piping and/or feed systems are to be located outside the tank farm boundary.

6. Once waste removal begins on a tank with a leak or crack and the waste is removed to a level below the lowest known leak or crack, that level shall become the maximum operating level of the tank and shall not be exceeded unless the exceedance is a temporary result of the waste removal process.

7. No tank that leaks or has leaked shall be used for waste receipt without prior approval from this Department. This condition does not apply to the necessary addition of waste for waste removal purposes. Also, this condition does not apply to the use of tank 13, the 242-H evaporator feed tank, provided the construction and utilization of the replacement evaporator, 242-25H, and it's associated feed tank do not deviate significantly from the State approved schedule. Any schedule changes must be approved by this office.

8. Within 60 days from the effective date of this permit the Permittee shall submit to this office a report containing the QA/QC procedures followed during the installation of the liner extension within the ITP hold tank area.

9. The Permittee shall maintain contingency plans or emergency procedures in place to respond to any known emergency situation with the potential to negatively impact human health or the environment. The plans and/or procedures shall be updated as necessary to include new information or changing conditions.

10. On June 30, 1987 the permittee submitted a revised RCRA Part A permit application which included the high-level radioactive waste tank system(s) contained in this permit. After this office issues the wastewater construction and operating permits for this facility, the permittee should amend its RCRA Part A permit to delete the tank system(s).

11. Based on a review of the Tank Assessment Report, submitted as a requirement of the Federal Facilities Agreement (FFA), Section IX, this office has determined that the Type I tanks identified as tanks 2-8 are approvable as equivalent devices for secondary containment. The Type I tanks, however, should only be used for waste receipt when there is no suitably available volume in an approved Type III tank. Furthermore, if any Type I tank develops a leak which exceeds the capacity of the 5-foot deep secondary containment pan, this approval shall be rescinded and no additional waste shall be directed to these Type I tanks.

12. This permit is being issued after review and approval of a construction permit application submitted to the State of South Carolina pursuant to the requirements of a Federal Facilities Agreement (FFA) entered into by the United States Department of Energy (the permittee), the United States Environmental Protection Agency, and The State of South Carolina on January 15, 1993. In addition to the conditions specifically stated in this permit, the permittee shall be subject to all applicable requirements of Section IX, including referenced appendices, of the FFA.

W-0517

OSR 3-4A-W (Rev1-89)

WESTINGHOUSE SAVANNAH RIVER COMPANY

INTER-OFFICE MEMORANDUM

ESH-FSS-93-0161

March 4, 1993

TO: N. C. BOYTER, 703-A
VICE PRESIDENT AND GENERAL MANAGER
WASTE MANAGEMENT AND ENVIRONMENTAL RESTORATION

FROM: J. V. ODUM, MANAGER-EPD, 742-A
J. F. JACKSON, GCO, 992-3W

ENVIRONMENTAL REGULATORY STATUS OF F AND H AREA TANK FARMS (U)

On March 3, 1993, Westinghouse Savannah River Company (WSRC) received a Wastewater Permit to Operate the F and H Area Tank Farms from the South Carolina Department of Health and Environmental Control (SCDHEC). Receipt of this permit is the culmination of a three-year effort by SCDHEC, the Environmental Protection Agency (EPA), WSRC and DOE-SR staff to devise the optimal permitting scheme for the tank farms.

On the basis of the receipt of the Wastewater Permit to Operate the F and H Area Tanks Farms, SRS is now subject to the requirements and conditions of the wastewater permit and they should be operated on that basis. The SRS is also now obligated to remove the F and H Area Tank Farms from the RCRA Part A Permit Application. A modification to the Part A Permit Application is currently routing for concurrence and will be submitted to the SCDHEC.

This effort does credit to the individuals involved throughout its development and clarifies a number of lingering regulatory questions. One example is the ability to restart the 1H Evaporator with confidence in the regulatory agencies acquiescence. If our offices can be of further assistance with regard to this permit, please do not hesitate to call.

J. V. Odum
Manager, Facility Support Section
Environmental Protection Department

J. F. Jackson
Chief Counsel
General Counsel Office

CC: C. Peckinpaugh, 703-A
G. T. Wright, 703-H
S. S. Cathey, 703-H
K. S. Wierzbicki, 703-H

W-0517

INTER-OFFICE MEMORANDUM
Savannah River Site

Date: 03-Mar-1993 05:28pm EST
From: Ronald L. Peterson
PETERSON-RL-B6679 AT A1 AT SA
Dept: ECD/LCB
Tel No: x5-8146

TO: See Below

Subject: OPERATING REMIT FOR HLW TANK FARM

TODAY SRS RECEIVED TWO PERMITS TO OPERATE, 1)HLW TANK FARM AND 2) TRANFER LINE & ASSOCIATED SUMP TO DWPF, FROM SCDHEC. THIS LEGALLY MEANS THAT THESE FACILITIES HAVE LEGITIMATE WASTEWATER PERMITS FROM THE STATE OF SOUTH CAROLINA AND ARE, THEREFORE, EXEMPT FROM RCRA REGULATIONS. SINCE THESE FACILITIES ARE EXEMPT FROM RCRA, THEY SHOULD BE REMOVED FROM SRS' RCRA PART A PERMIT. THESE FACILITIES NOW MAY BE STARTED UP UNDER THEIR SCDHEC-ISSUED WASTEWATER PERMITS.

Distribution:

TO:	Cynthia Blair-McManus	(BLAIR_MCMANUS-C-B8534 AT A1 AT SASR
TO:	A. Lee Watkins	(WATKINS-AL-A9100 AT A1 AT SASRS3)
TO:	Charles E. Anderson	(ANDERSON-CE-B7688 @A1@SASRS2)
CC:	J. V. ODUM	(ODUM-JV-O4184 @A1@SLSRP1)
CC:	W. DANNY DUNAWAY	(DUNAWAY-WD-O7436 @A1@SLSRP1)
CC:	Charles R. Hayes, Jr.	(HAYES-CR-W5445 @A1@SASRS2)
CC:	Lucy M. Knowles	(KNOWLES-LM-S8252 AT A1 AT SASRS3)
CC:	Gary S. Hoover	(HOOVER-GS-S8860 AT A1 AT SASRS3)
CC:	Herbert L. Davis	(DAVIS-HL-B8758 AT A1 AT SASRS3)
CC:	Alice C. Doswell	(DOSWELL-AC-B8749 AT A1 AT SASRS3)
CC:	Marshal P. Prater	(PRATER-MP-B6105 AT A1 AT SASRS3)
CC:	James E. Bolen	(BOLEN-JE-B8405 AT A1 AT SASRS3)
CC:	Arthur B. Gould, Jr.	(GOULD-AB-S8306 AT A1 AT SASRS3)

W-0517
FVF

EPD-FSS
FIELD VISIT REPORT

(REV. 0, 6/10/91)

DISTRIBUTION:
LORI S. COWARD, 703-18A
Permit File #W-0517
W. D. Dunaway, 703-18A
M. D. Dukes, 742-A
C. R. Dynarski, 742-A
M. A. Hunter, 742-6G
J. L. Keyes, 742-A
W. J. Maloney, 742-A
J. V. Odum, 742-A
W. L. Payne, 742-A
C. B. Stevens, 742-6G
K. S. Wierzbicki, 742-6G

CR Hayes

EPD REPRESENTATIVE	SECTION (FSS Or FSG)	DATE	TIME STARTED	TIME ENDED	TOTAL TIME IN HRS
C. R. Hayes / W. D. Dunaway	PFSG	2/26/93	9:00 AM	2:00 PM	5.0

FIELD CONTACT NAME (Location, Phone #)	FIELD CONTACT DEPT
M. A. Hunter, 742-6G, 7-0520	WM-RC

OTHER PARTICIPANTS(Name, Department, Location, Phone #)

J. Bolen, 703-41A, 5-1820
D. M. Blue, 742-6G, 7-0520
J. W. Chapman, SCDHEC - Aiken
B. Damani, 704-15S, 7-8652
W. A. Morrison, 241-100F
T. P. Gaughan, 241-152H

LOCATION

F-Tank Farm, H-Tank Farm, In-Tank Precipitation Facility, New Waste Transfer Facility

PURPOSE OF VISIT

Perform final inspection of facilities listed above (Construction Permit #17424-IW)

FIELD VISIT SUMMARY

The following facilities / systems were visited:

F and H-TANK FARM:

- Tanks (several typical tanks were visited)
- Evaporator 242-F
- Several diversion boxes
- Pump pits
- Stormwater monitoring system
- Control Rooms
- Associated cooling, containment and filter systems

IN-TANK PRECIPITATION FACILITY (ITP)

- Crossflow filters
- Stripper Columns
- Hold Tanks
- Cold Feed Area
- Control Room

NEW WASTE TRANSFER FACILITY (NWTF)

All operating, maintenance and emergency procedures are in place.
Physically, all appeared satisfactory.
Logbooks were in the control rooms.

EPD presented the following paperwork to SCDHEC:

- "As-Built" Drawings
- Signed O-I-C Designation Forms
- PE Certification Letters for ITP, H-S IAL and

ACTION REQUIRED? (YES OR NO) Yes

IF YES DESCRIBE:

If all paperwork okay, SCDHEC will issue permit to operate.

HIGHLIGHTED ITEM? (YES OR NO) Yes

INTER-OFFICE MEMORANDUM
Savannah River Site

Date: 26-Feb-1993 01:27pm EST
From: Matthew A. Hunter
HUNTER-MA-L2335 AT A1 AT SASRS2
Dept: WMRC
Tel No: 557-0520/bp#6761

TO: See Below

Subject: DHEC's Final Inspection of the Tank Farms and ITP

As special debt of gratitude is owed all involved in braving the cold and wet for the DHEC tour. The inspection went very well and yield no findings. All areas were covered and the only questions raised were do to curiosity about the process. EPD is to meet with DHEC on Tuesday morning to pen the final language for the permit to operate, which I expect will be issued the same day.

Distribution:

TO:	Bharat R. Damani	(DAMANI-BR-Y4387 AT A1 AT SASRS2)
TO:	James E. Bolen	(BOLEN-JE-B8405 @A1@SASRS3)
TO:	Chuck Hayes	(HAYES-CR-Z9722 @A1@SLSRP1)
TO:	W. DANNY DUNAWAY	(DUNAWAY-WD-O7436 @A1@SLSRP1)
TO:	TIMOTHY P. GAUGHAN	(GAUGHAN-TP-O8815 AT A1 AT SASRS2)
TO:	Charles G. Lampley 7-8550	(LAMPLEY-CG-O6174 AT A1 AT SASRS2)
TO:	J.B. Crosby	(CROSBY-JB-O7533 AT A1 AT SASRS2)
TO:	Arthur S. Greer	(GREER-AS-Y6907 AT A1 AT SASRS2)
TO:	Karen F. Lesko	(LESKO-KF-O7041 AT A1 AT SASRS2)
TO:	Robert W. Wilson	(WILSON-RW-T4847 AT A1 AT SASRS2)
TO:	W.A. Morrison	(MORRISON-WA-T7866 AT A1 AT SASRS2)
TO:	Garry Davis	(DAVIS-G-O4089 @A1@SRXSS2)
CC:	Cynthia Blair-McManus	(BLAIR_MCMANUS-C-B8534 @A1@SASRS3)
CC:	Douglas M. Blue	(BLUE-DM-L4808 AT A1 AT SASRS2)
CC:	CARY B. STEVENS	(STEVENS-CB-O5981 AT A1 AT SASRS2)
CC:	Kim S. Wierzbicki	(WIERZBICKI-KS-O6535 AT A1 AT SASRS2)
CC:	Donald Thaxton	(THAXTON-GD-O5806 AT A1 AT SASRS2)
CC:	Mark S. Peters	(PETERS-MS-O5010 AT A1 AT SASRS2)
CC:	Brenda L. Lewis	(LEWIS-BL-O6503 AT A1 AT SASRS2)
CC:	TOM MONAHON	(MONAHON-TM-O4411 @A1@SRXSS2)
CC:	Roger K. Roosa	(ROOSA-RK-L4532 AT A1 AT SASRS2)
CC:	Rod M. Satterfield	(SATTERFIELD-RM-T3212 @A1@SLSRP1)
CC:	Ginny Ellis	(ELLIS-VE-W0928 AT A1 AT SASRS2)
CC:	Dot Matthews	(MATTHEWS-DL-W0643 AT A1 AT SASRS2)

February 26, 1993

Ms. M. C. Reece, Director
Lower Savannah District
Environmental Quality Control
South Carolina Department of Health
and Environmental Control
218 Beaufort Street, NE
Aiken, South Carolina 29801

Dear Ms. Reece:

PROFESSIONAL ENGINEERS CERTIFICATION SCDHEC CONSTRUCTION PERMIT NO. 17424-IW, F/H-AREA HIGH LEVEL RADOACTIVE WASTE TANK FARMS (U)

I have reviewed the information provided in the subject Construction Permit Application for the New Waste Transfer Facility (HDB-8, 241-100H) and the H-S Inter-Area Transfer line. This project was permitted "as-built" under SCDHEC Permit No. 17424-IW, and has been found to be, to the best of my knowledge, built in accordance with the approved plans and specifications. The subject transfer line was tested to the appropriate test pressures and the results were acceptable.

Sincerely,

Surendra K. Gupta

Surendra K. Gupta, P.E.
Registration No. 13818

SKG/jpj

SOUTH CAROLINA
REGISTERED PROFESSIONAL ENGINEER
No. 13818
SURENDRA K. GUPTA

2

SUMMARY FOR HDB-8 AND H/S INTER-AREA TRANSFER LINES (U)
PERMIT NO. 17424-IW

As-Built Construction Permit Application for F&H Area High Level Radioactive Waste Tank Farms.

The following is a compilation of information collected/reviewed in order to certify that construction of the interarea waste transfer lines (HDB-8 to Vitrification Building) is in accordance with design specifications and approved plans.

P&IDs	Isometrics	Plan & Profiles Dwgs	Sections & Details
W750259	W756757	W761600	W762710
W750136	W756756	W761599	W761572
W750040	W756758	W761598	W761583
W750150	W756759	W761597	W762711
W750287	W756771	W761596	W762712
W750290	W756769	W761595	W764440
W778024	W756772	W761587	W764441
	W756770	W761586	
		W761585	
		W761584	
		W761580	
		W761581	
		W761582	

Reference Drawings	Line Numbers	Facility Segment
HDB-8 to APP		
W750290	RCZ 9	
W778024	RCZ 36	34.11C
APP to LPP		
W750290	RCZ 20	
W750287	PCP 4	34.11D
W750150	SDP 10	
	SDP 11	
LPP to VIT		
W750136	SDP 24	
W750259	SDP 25	34.11E
W750040	PCP 9	
W750259	RCZ 4	

SUMMARY FOR HDB-8 AND H/S INTER-AREA TRANSFER LINES (U)
PERMIT NO. 17424-IW

As-Built Construction Permit Application for F&H Area High Level Radioactive Waste Tank Farms.

The following is a compilation of information collected/reviewed in order to certify that construction of the interarea waste transfer lines (HDB-8 to Vitrification Building) is in accordance with design specifications and approved plans.

P&IDs	Isometrics	Plan & Profiles Dwgs	Sections & Details
W750259	W756757	W761600	W762710
W750136	W756756	W761599	W761572
W750040	W756758	W761598	W761583
W750150	W756759	W761597	W762711
W750287	W756771	W761596	W762712
W750290	W756769	W761595	W764440
W778024	W756772	W761587	W764441
	W756770	W761586	
		W761585	
		W761584	
		W761580	
		W761581	
		W761582	

Reference Drawings	Line Numbers	Facility Segment
HDB-8 to APP		
W750290	RCZ 9	
W778024	RCZ 36	34.11C
APP to LPP		
W750290	RCZ 20	
W750287	PCP 4	34.11D
W750150	SDP 10	
	SDP 11	
LPP to VIT		
W750136	SDP 24	
W750259	SDP 25	34.11E
W750040	PCP 9	
W750259	RCZ 4	

REFERENCE MATERIAL/TEST DATA (U)

- Turnover Packages Part IV - A&B for facility segments 34.11C, 34.11D and 34.11E.
- Hydro test data for installed jacket and core piping.
- Pipe fabrication hydro test data and weld radiographic test data.
- QA Traveler Data Sheets

The following boxes contain much of the information mentioned above and are located in records; Contact Sylvia Fields (5-2960), 703-A Basement, Room E023 to request for review.

C-01222	Contains Facility Segments:		
#095		34.11C -	Transfer lines RCZ 9 & 36
ACC-37113			Turnover Packages
			Pressure test data with marked drawings.
		34.11D -	Final walkdown checklist
			Color coded drawings (Pressure test).
		34.11E -	Pressure test data.

OE-5267	Contains Facility Segments:	
#094	34.11D&E	Pressure test data
0118-92	H-Area Domestic Water	

C-01215	Contains Facility Segments:	
#089	34.11C -	Final Walkdown checklist
ACC-37107	34.11E -	Final Walkdown checklist

W0517

February 26, 1993

Ms. M. C. Reece, Director
Lower Savannah District
Environmental Quality Control
South Carolina Department of Health
and Environmental Control
218 Beaufort Street, NE
Aiken, South Carolina 29801

Dear Ms. Reece:

PROFESSIONAL ENGINEERS CERTIFICATION SCDHEC CONSTRUCTION PERMIT NO. 17424-IW, F/H-AREA HIGH LEVEL RADOACTIVE WASTE TANK FARMS (U)

I have reviewed the information provided in the subject Construction Permit Application for the New Waste Transfer Facility (HDB-8, 241-100H) and the H-S Inter-Area Transfer line. This project was permitted "as-built" under SCDHEC Permit No. 17424-IW, and has been found to be, to the best of my knowledge, built in accordance with the approved plans and specifications. The subject transfer line was tested to the appropriate test pressures and the results were acceptable.

Sincerely,

Surendra K. Gupta

Surendra K. Gupta, P.E.
Registration No. 13818

SKG/jpj

SOUTH CAROLINA
REGISTERED PROFESSIONAL ENGINEER
No. 13818
SURENDRA K. GUPTA

Westinghouse
Savannah River Company

P. O. Box 616
Aiken, SC 29802

Environmental Quality Control Office
Lower Savannah District
218 Beaufort Street, N. E.
Aiken, South Carolina 29801

Ref:

Wastewater Treatment Facility

PERMIT	17424-IW , DWPF TRANSFER LINES
PLANT	SRS-DWPF VITRIFICATION FACILITY
OWNER	U. S. DEPARTMENT OF ENERGY
COUNTY	AIKEN, SC

The operator-in-charge of the above described plant will be Debbie B. Gleaton who holds a valid "B" PHYSICAL/CHEMICAL WASTEWATER treatment certification issued by the South Carolina Environmental Certification Board.

The plant will be operated in compliance with all State of South Carolina rules and regulations for Wastewater Treatment Facilities, and with all other operating and NPDES permit conditions.

In case of an emergency during non-working hours, Debbie B. Gleaton may be reached at the following location:

ADDRESS	**PHONE**
Rt. 2, BOX 88B Williston, SC.	(803)266-3909 (Beeper # 2563)

Should the operator in charge of this plant change for any reason, Westinghouse Savannah River Company will notify the Lower Savannah District Environmental Quality Control Office and the Board of Certification in writing. This individual has been informed that failure to properly carry out his/her duties as operator will result in the Environmental Quality Control Office requesting appropriate action by the South Carolina Environmental Certification Board, which could result in the revocation or suspension of his/her license.

J. Keyes for

M. D. Dukes, Manager
Environmental Support Section
Environmental Protection Department

DATE: 2/25/93

Westinghouse
Savannah River Company

P.O. Box 616
Aiken, SC 29802

ESH-FSS-93-0149

February 23, 1993

Mr. A. B. Gould, Director
Environmental Compliance Division
U. S. Department of Energy
Savannah River Field Office
P. O. Box A, Building 703-41A
Aiken, SC 29802

Dear Mr. Gould:

RESOURCE CONSERVATION AND RECOVERY ACT (RCRA) PART A PERMIT APPLICATION — REVISE SANITARY LANDFILL— SUBMITTAL OF DRAFT REVISION (U)

Enclosed for your review is a draft copy of the revised Part A Permit Application pages associated with the proposed revision of the Sanitary Landfill and deletion of F/H Tank Farms. It is revision 10, dated March 31, 1993. The changes include the following:

- Revision of the description of the Sanitary Landfill to include the northern portion of the Southern Sector, thus making the facility one contiguous unit.

- Revision of the capacity of the Sanitary Landfill to agree with the Part B being issued at the same time.

- Deleting the F/H Tank Farms from Interim Status based on the assumption that they will obtain their industrail waste water operating permit by March 31, 1993.

- Revision of the annual quantity handled of Hazardous Waste Index (HWI) #051 through 052 to zero as a result of the tank farms becoming industrial wastewater permitted.

Please review this draft revision and return comments by March 3, 1993. Your comments are needed quickly as this Part A revision needs to be submitted to the Department of Health and Environmental Control (DHEC) on March 31, 1993. Our schedule is to begin Westinghouse Savannah River Company (WSRC) concurrence by March 5, 1993, and return the final

2

document to you by March 12, 1993, for concurrence. As such, I will need to have your comments on the Part A by March 3, 1993, in order to have the final revised Part A revision to you by March 12, 1993.

Questions from your staff should be directed to W. J. Maloney (X5-1086).

Yours very truly,

WJ Maloney for

J. V. Odum, Manager
Facility Support Section
Environmental Protection Department

WJM:sam
Enclosure

CC: P. Prater, DOE, 703-41A (w/ attachments)
J. Bolen, 703-41A (w/3 attachment)
J. S. Roberts, 742-A
J. V. Odum, 742-A
K. Wierzbicki, 703-H
M. A. Ebra, CCC-4
G. Barnes, CCC-3
J. W. Cook, 742-A
C. Stevens, 742-6G, (w/ attachment)
W. J. Maloney, 742-A, (w/ attachment)
M. E. Johnson, 742-A, (w/ attachment)
S. Carroll, 742-A
K. A. Wolfe, 742-A (w/ attachment)
A. Suer, CCC-4 (w/ attachment)
C. Bergren, CCC-4
D. Dunaway, 703-18A
C. Hayes, 703-18A
P. D. d'Entremont, 703-H
D. M. Blue, 742-G
R. L. Fanning, 742-A
T. P. Gaughan, 241-152H
EPD File, 742-A
EPD RCRA File, 742-A

INTER-OFFICE MEMORANDUM
Savannah River Site

Date: 23-Feb-1993 02:19pm EST
From: Matthew A. Hunter
HUNTER-MA-L2335 AT A1 AT SASRS2
Dept: WMRC
Tel No: 557-0520/bp#6761

TO: See Below

Subject: DHEC Final Inspection of Tank Farm Facilities

The South Carolina Department of Health and Environmental Control has been invited to tour the Waste Management facilities as a Final Inspection for the permitting of the tank farms and ITP as wastewater facilities. A cursory walkdown was perform (2/12 & 2/16) by WMRC and EPD yielding no findings or areas of concern. It is expected that this will also be the case when DHEC visits. The following presents a preliminary schedule for the State's tour of the tank farms, including representative from WMO and WMRC for the tour/presentations.

0930 - 1045 F Tank Farm	(W. A. Morrison/D. M. Blue)
1100 - 1130 Diversion Box 8	(?/M. A. Hunter)
1130 - 1215 Lunch	
1230 - 1313 ITP/ESP	(?/M. A. Hunter)
1315 - 1400 H Tank Farm	(R. W. Wilson or K. F. Lesko/ M. A. Hunter)
1400 Depart	

If there are any difficulties with this schedule, please inform me at 70520.

Note: DHEC has already reviewed the Low Point Pump Pit on 8/11/92, if a review of the Auxiliary Pump Pit is requested, the tour will be following H Tank Farm.

Distribution:

TO:	Bharat R. Damani	(DAMANI-BR-Y4387 AT A1 AT SASRS2)
TO:	Arthur S. Greer	(GREER-AS-Y6907 AT A1 AT SASRS2)
TO:	TIMOTHY P. GAUGHAN	(GAUGHAN-TP-O8815 AT A1 AT SASRS2)
TO:	Charles G. Lampley 7-8550	(LAMPLEY-CG-O6174 AT A1 AT SASRS2)
TO:	W.A. Morrison	(MORRISON-WA-T7866 AT A1 AT SASRS2)
TO:	Garry Davis	(DAVIS-G-O4089 @A1@SRXSS2)
TO:	Karen F. Lesko	(LESKO-KF-O7041 AT A1 AT SASRS2)
TO:	Robert W. Wilson	(WILSON-RW-T4847 AT A1 AT SASRS2)
CC:	W. DANNY DUNAWAY	(DUNAWAY-WD-O7436 @A1@SLSRP1)
CC:	Chuck Hayes	(HAYES-CR-Z9722 @A1@SLSRP1)
CC:	Kathy Z. Wolf	(WOLF-KZ-O9884 AT A1 AT SASRS2)
CC:	Douglas M. Blue	(BLUE-DM-L4808 AT A1 AT SASRS2)
CC:	CARY B. STEVENS	(STEVENS-CB-O5981 AT A1 AT SASRS2)
CC:	Kim S. Wierzbicki	(WIERZBICKI-KS-O6535 AT A1 AT SASRS2)
CC:	Donald Thaxton	(THAXTON-GD-O5806 AT A1 AT SASRS2)
CC:	Mark S. Peters	(PETERS-MS-O5010 AT A1 AT SASRS2)

2

CC:	Brenda L. Lewis	(LEWIS-BL-O6503 AT A1 AT SASRS2)
CC:	TOM MONAHON	(MONAHON-TM-O4411 @A1@SRXSS2)
CC:	Harvey M. Handfinger	(HANDFINGER-HM-L3128 AT A1 AT SASRS2)
CC:	Roger K. Roosa	(ROOSA-RK-L4532 AT A1 AT SASRS2)
CC:	Ginny Ellis	(ELLIS-VE-W0928 AT A1 AT SASRS2)
CC:	Dot Matthews	(MATTHEWS-DL-W0643 AT A1 AT SASRS2)

2

Westinghouse
Savannah River Company

P.O. Box 616
Aiken, SC 29802

ESH-ESS-93-0120

February 22, 1993

Mr. L. E. Arrington, Environmental Engineer
Industrial and Agricultural Wastewater Division
South Carolina Department of Health
and Environmental Control
2600 Bull Street
Columbia, SC 29201

Mr. W. R. Moore, Director
South Carolina Environmental Certification Board
2221 Divine Street
Suite 320
Columbia, SC 29205

Gentlemen:

OIC REQUIREMENTS FOR SRS TANK FARM WASTEWATER TREATMENT FACILITIES (U)

The Savannah River Site (SRS), as a means of meeting the requirements for certified operator coverage at the Tank Farm Wastewater Treatment Facilities (Permit #17,424 - IW), proposes to provide certified operator coverage in the following manner:

> An individual Operator-In-Charge (OIC) has been designated for each of the three facilities. These OICs will be present on day shift at their respective facilities. When the OICs are not present, they, or their alternates, will be on call twenty-four hours a day and will be readily accessible. The OICs (or alternates) will sign the facility log books seven days per week. All other operators at the treatment facilities are working towards obtaining A-Level certification. Each facility will be able to provide A-level physical/chemical certified operator coverage on each shift by mid-1994.

Currently, SRS will provide at least one A-level operator in one of the three areas (H Tank Farm, F Tank Farm, or ITP), each shift, until full coverage can be established.

Please review this plan and call W. L. Payne of my staff at (803) 725-9002 if you have any questions. The Tank Farm facilities are preparing to receive a "Permit To Operate" in the near future; therefore, a quick response would be greatly appreciated.

Yours truly,

W. L. Payne /for

J. L. Keyes, Manager
Surface Water, Wetlands, and Land Protection Group
Environmental Protection Department

WLP:cs

CC: A. B. Gould, DOE-SR, 703-41A
M. C. Reece, SCDHEC-Aiken

Mr. L. E. Arrington
Mr. W. R. Moore
ESH-ESS-93-0120
February 22, 1993

BCC: J. D. Arnett, 703-41A
J. E. Bolen, 703-41A
H. L. Davis, 703-41A
G. T. Wright, 703-H
M. D. Dukes, 742-A
S. S. Cathey, 703-H
K. S. Wierzbicki, 742-6G
C. B. Stevens, 742-6G
A. R. Gough, 992-3W, Rm. 8
W. L. Payne, 742-A
B. R. James, CCC-2, Rm. 221
M. A. Hunter, 742-6G
C. R. Hayes, 703-18A
Records Administration, 773-52A
EPD File, 742-A

INTER-OFFICE MEMORANDUM
Savannah River Site

Date: 22-Feb-1993 04:55pm EST
From: Matthew A. Hunter
HUNTER-MA-L2335 AT A1 AT SASRS2
Dept: WMRC
Tel No: 557-0520/bp#6761

TO: See Below

Subject: Update on Action Items for TFWWP and FFA - 2/22/93

The following is a revised listing of the actions associated with preparation/compliance with the Tank Farm Wastewater Permit (TFWWP) and the Federal Facility Agreement (FFA). This list includes responsible parties and target completion dates for each actions. The list will be updated on a weekly basis and will include a status line where applicable. The listing is broken down in to essential items that require resolution prior to the issuance the operating permit and non-essential items that may be resolved after the permit is issued. Items that have been completed will be carry over one time and then will be deleted.

Wastewater Permit (Essential)

1. Ensure WMO is capable of meeting requirements for Operators-On-Duty.
   Responsible party: WMO/WMRC (WAW/MAH)
   Completion Date: 2/24
   Status: Letter to State has been sent. Preliminary reaction is that WM proposal is exceptable. Awaiting offical response

2. Have OIC Logbook bound, Quarterly basis (92 days).
   Responsible party: WMRC (DMB)
   Completion Date: Complete

3. PE certification for ITP, NWTF & H/S IAL for final inspection.
   Responsible party: ITP: Complete, NWTF & H/S IAL: (Gupta/MAH)
   Completion Date: 2/24

4. Route QA/QC Package (ITP Liner) for Approval.
   Responsible party: WMRC (MAH)
   Completion Date: 2/23
   Status: Memo is being reviewed by Handfinger. GTW next and last review/signature.

5. Meet with OIC/AOICs and FMs to discuss responsibilities.
   Responsiblie party: WMRC (DMB)
   Completion Date: 2/26
   Status: Meetings to be set up w/ FMs

6.a Label Procedure files and index as O&M Manual.
   Responsible party: WMO (LPB)
   Completion Date: 2/23

6.b Place memo documenting use of procedure files as O&M Manual in indexes.

Responsible party: WMO (LPB)
Completion Date: 2/23

Wastewater Permit (Non-Essential)

1.a Track revision to WM Tech Review that ensures all modifications that will effect the description in the wastewater permit application or will change the integrity description in the tank assessment will be recognized and caught. (This will trigger any required PE certifications per the FFA.) [See 1.b FFA Section]
Responsible party: WMRC (MAH & MJH)
Completion Date: Issuance of revision

1.b Brief HLWE Engineers on upcoming revision before issuance.
Responsible party: WMRC
Completion Date: 2/26

1.c Train HLWE Engineers on new WM Tech Review procedures.
Responsible party: WMRC
Completion Date: 3/5

2. Propose pathforward for matrix for usable chemicals in the tank farms that will not alter the composition of the ETF effluent.
Responsible party: WMRC & HLWE (AWW, MAH, KNU & DMB)
Completion Date: 3/12
Status: HLWE has begun work and WMRC will review for adequate for tank farm application.

3. Package all changes to application for transmittal to DHEC (including 2F)
Responsible party: WMRC/HLWE(DMB & JEG)
Completion Date: Complete

4. Issue guidance to HLWE on how to make notification and package modifications to wastewater permit.
Responsible party: WMRC (MAH & DMB)
Completion Date: 3/12

5. Review RHLWE schedule w/ DOE to confirm an approved schedule for submittal to DHEC.
Responsible party: WMRC
Completion Date: 2/26

6. Track revision to 241-FH-7TQ procedure to ensure that it is implemented.
Responsible party: WMRC
Completion Date: Implementation of procedure.

7.a Determine RCRA training requirements after issuance of TFWWP.
Responsible party: WMRC (DMB/MBB)
Completion Date: Complete
Status: Training appears to be limited in scope to Chemical Coordinator and waste handler-type personnel. Therefore moved to Non-Essential List.

7.b Draft memo documenting RCRA Training requirements for Tank Farm personnel.
Responsible party: WMRC (DMB/MBB)

Completion Date: 3/12

8. Review BMP with DOE to ensure adequacy of plan.
Responsible party: WMRC (DMB)
Completion Date: 3/26

Federal Facility Agreement

1.a Info package for DE concerning certification mechanism for modifications to tank farm wastewater permit and secondary containment.
Responsible party: WMRC (MAH)
Completion Date: 2/26

1.b DE to propose a program for certifications.
Responsible party: DE (W Scott Gray)
Completion Date: 3/30

2.a Review WM Response to Leaks procedure for adequacy.
Responsible party: WMRC/WMO/HLWE
Completion Date: 3/19

2.b Propose revisions to leak procedures to ensure compliance.
Responsible party: WMRC
Completion Date: 3/19

3.a Develop Logic Diagram for the responses for leaks.
Responsible party: WMRC (DMB & RSM)
Completion Date: 3/2
Status: Subcontractor is underway. Requires additional scenarios for evaluation.

3.b Set up meeting with HLWE and Subcontractor for input to Logic Diagram.
Responsible party: WMRC (MAH)
Completion Date: 2/26

4. Review WM SIRIM procedures and recommend any revisions required.
Responsible party: WMRC (MAH & MJH)
Completion Date: 2/26

5. Submit Waste Removal Schedule to DHEC.
Responsible party: HWLE (MJM)
Completion Date: 90 Days from effecive date of FFA
Status: The effective date may be retrofitted to signing date of FFA (2/1). Making the schedule due on 5/2.

6. Identify and map all known spill sites with annual updates (first draft).
Responsible party: WMRC (EBD)
Completion Date: 3/28
Status: 75% of H-Area spill database has

Distribution:

TO: CARY B. STEVENS (STEVENS-CB-05981 AT A1 AT SASRS2)

CC: Ginny Ellis (ELLIS-VE-W0928 AT A1 AT SASRS2)

CC:	WALTER A. WILSON	(WILSON-WA-O5215 @A1@SLSRP1)
CC:	Robert W. Wilson	(WILSON-RW-T4847 AT A1 AT SASRS2)
CC:	Arthur W. Wiggins, Jr.	(WIGGINS-AW-O6172 AT A1 AT SASRS2)
CC:	Kim S. Wierzbicki	(WIERZBICKI-KS-O6535 AT A1 AT SASRS2)
CC:	Bill Van Pelt	(VANPELT-WB-O7016 AT A1 AT SASRS2)
CC:	Kester Uzochukwu	(UZOCHUKWU-K-L1224 AT A1 AT SASRS2)
CC:	L.C. Thomas	(THOMAS-LC-O5194 AT A1 AT SASRS2)
CC:	Gerry F. Stejskal	(STEJSKAL-GF-Y6594 @A1@SLSRP1)
CC:	Joette G. Sonnenberg	(SONNENBERG-JG-O5770 AT A1 AT SASRS2)
CC:	Richard C. Shank	(SHANK-RC-Z8546 @A1@SLSRP1)
CC:	Rod M. Satterfield	(SATTERFIELD-RM-T3212 @A1@SLSRP1)
CC:	Roger K. Roosa	(ROOSA-RK-L4532 AT A1 AT SASRS2)
CC:	Luke T. Reid	(REID-LT-O8559 @A1@SLSRP1)
CC:	Carol A. Polson	(POLSON-CA-O5752 AT A1 AT SASRS2)
CC:	Mark S. Peters	(PETERS-MS-O5010 AT A1 AT SASRS2)
CC:	Bill Payne	(PAYNE-WL-Y7708 @A1@SLSRP1)
CC:	David T. O'Rear	(OREAR-DT-O4792 AT A1 AT SASRS2)
CC:	Robert S. Murphy	(MURPHY-RS-B9654 AT A1 AT SASRS2)
CC:	TOM MONAHON	(MONAHON-TM-O4411 @A1@SRXSS2)
CC:	Steven M. Mertz	(MERTZ-SM-A9202 AT A1 AT SASRS2)
CC:	Mark J. Mahoney	(MAHONEY-MJ-O5457 AT A1 AT SASRS2)
CC:	Brenda L. Lewis	(LEWIS-BL-O6503 AT A1 AT SASRS2)
CC:	Karen F. Lesko	(LESKO-KF-O7041 AT A1 AT SASRS2)
CC:	Charles G. Lampley 7-8550	(LAMPLEY-CG-O6174 AT A1 AT SASRS2)
CC:	Chuck Hayes	(HAYES-CR-Z9722 @A1@SLSRP1)
CC:	Michael J. Hagenbarth	(HAGENBARTH-MJ-L2326 AT A1 AT SASRS2)
CC:	Johnna E. Griffiths	(GRIFFITHS-JE-Y5542 AT A1 AT SASRS2)
CC:	Arthur S. Greer	(GREER-AS-Y6907 AT A1 AT SASRS2)
CC:	Arthur S. Greer	(GREER-AS-Y6907 AT A1 AT SASRS2)
CC:	TIMOTHY P. GAUGHAN	(GAUGHAN-TP-O8815 AT A1 AT SASRS2)
CC:	W. DANNY DUNAWAY	(DUNAWAY-WD-O7436 @A1@SLSRP1)
CC:	V.G. Dickert	(DICKERT-VG-O4857 AT A1 AT SASRS2)
CC:	Elizabeth B. DeWitt	(DEWITT-EB-L2262 AT A1 AT SASRS2)
CC:	Garry Davis	(DAVIS-G-O4089 @A1@SRXSS2)
CC:	John W. Cook	(COOK-JW-O9823 @A1@SLSRP1)
CC:	Joseph V. Cioffi	(CIOFFI-JV-B4664 @A1@SLSRP1)
CC:	Mario A. Ceravolo, 703-H	(CERAVOLO-MA-O7495 AT A1 AT SASRS2)
CC:	Dot Matthews	(MATTHEWS-DL-W0643 AT A1 AT SASRS2)
CC:	Thomas B. Caldwell	(CALDWELL-TB-Y6683 AT A1 AT SASRS2)
CC:	Frederick F. Cadek	(CADEK-FF-Y5022 @A1@SLSRP1)
CC:	W. Brent Boore	(BOORE-WB-O6688 AT A1 AT SASRS2)
CC:	Douglas M. Blue	(BLUE-DM-L4808 @A1@SRXSS2)
CC:	Cynthia Blair-McManus	(BLAIR_MCMANUS-C-B8534 @A1@SASRS3)
CC:	Marcia B. Birk	(BIRK-MB-Y9793 AT A1 AT SASRS2)
CC:	D T BIGNELL	(BIGNELL-DT-O5579 @A1@SLSRP1)
CC:	Chris J. Baker	(BAKER-CJ-B4996 @A1@SRXSS2)
CC:	Carrie A. Amacher	(AMACHER-CA-C9103 @A1@SLSRP1)

INTER-OFFICE MEMORANDUM
Savannah River Site

Date: 22-Feb-1993 02:54pm EST
From: Bharat R. Damani
DAMANI-BR-Y4387 AT A1 AT SASRS2
Dept: T&E, ENV. AFFAIRS
Tel No: 78652

TO: Matthew A. Hunter (HUNTER-MA-L2335 AT A1 AT SASRS2)

CC: Kathy Z. Wolf (WOLF-KZ-O9884 AT A1 AT SASRS2)
CC: Surendra K. Gupta (GUPTA-SK-L0395 AT A1 AT SASRS2)
CC: Chuck Hayes (HAYES-CR-Z9722 @A1@SLSRP1)

Subject: SCDHEC Final Inspections of Tankfarms and DWPF ITL

Would you please make sure that Mr. Gupta is performing PE certification of the ITL drawings and any as built DCF? Make sure that theses drawings, DCF and hydrotest results are included in your final package.

Thanks!

INTER-OFFICE MEMORANDUM
Savannah River Site

Date: 19-Feb-1993 03:53pm EST
From: Matthew A. Hunter
HUNTER-MA-L2335 AT A1 AT SASRS2
Dept: WMRC
Tel No: 557-0520/bp#6761

TO: See Below

Subject: Update on TFWWP and FFA Action Items - 2/19/93

The following is a revised listing of the actions associated with preparation/compliance with the Tank Farm Wastewater Permit (TFWWP) and the Federal Facility Agreement (FFA). This list includes responsible parties and target completion dates for each actions. The list will be updated on a weekly basis and will include a status line where applicable. The listing is broken down in to essential items that require resolution prior to the issuance the operating permit and non-essential items that may be resolved after the permit is issued. Items that have been completed will be carry over one time and then will be deleted.

Wastewater Permit (Essential)

1. Ensure WMO is capable of meeting requirements for Operators-On-Duty.
   Responsible party: WMO/WMRC (WAW/MAH)
   Completion Date: 2/24
   Status: Letter to State is being drafted with proposal for coverage.

2. Receive concurrence on use of WMO procedures as O&M Manual.
   Responsible party: EPD (CRH & WLP)
   Completion Date: Complete

3. Have OIC Logbook bound, Quarterly basis (93 days).
   Responsible party: WMRC (DMB)
   Completion Date: 2/22
   Status: At print shop.

4. Review Best Management Practice plan to ensure EPD is in concurrence. (Condition 3)
   Responsible party: WMRC (DMB)
   Completion Date: Complete
   Status: Reviewed w/ EPD 2/18.

5. Certify requested prints.
   Responsible party: Rich Stegen (PE, Parson/C. T. Main)
   Completion Date: Complete
   Status: Prints have been received with certification.

6. Invite DHEC for Final Inspection.
   Responsible party: EPD
   Completion Date: Complete
   Status: EPD called DHEC on 2/17 and scheduled Final Inspection on 2/26 @ 0900. Schedule to be

issued.

7. PE certification for ITP, NWTF & H/S IAL for final inspection.
Responsible party: ITP: Complete, NWTF & H/S IAL: (Gupta/MAH)
Completion Date: 2/22

8. Route QA/QC Package (ITP Liner) for Approval.
Responsible party: WMRC (MAH)
Completion Date: 2/23
Status: Memo is being reviewed by Handfinger.

9. Receive concurrence on use of Emergency Preparedness Plan instead of Contingency Plan.
Responsible party: EPD (CRH & WLP)
Completion Date: Complete

10. Meet with OIC/AOICs and FMs to discuss responsibilities.
Responsiblie party: WMRC (DMB)
Completion Date: 2/26
Status: Meetings to be set up w/ FMs

11. Determine RCRA training requirements after issuance of TFWWP.
Responsible party: WMRC (DMB/MBB)
Completion Date: 2/26

12.a Label Procedure files and index as O&M Manual.
Responsible party: WMO (LPB)
Completion Date: 2/23

12.b Place memo documenting use of procedure files as O&M Manual in indexes.
Responsible party: WMO (LPB)
Completion Date: 2/23

Wastewater Permit (Non-Essential)

1.a Track revision to WM Tech Review that ensures all modifications that will effect the description in the wastewater permit application or will change the integrity description in the tank assessment will be recognized and caught. (This will trigger any required PE certifications per the FFA.) [See 1.b FFA Section]
Responsible party: WMRC (MAH & MJH)
Completion Date: Issuance of revision

1.b Brief HLWE Engineers on upcoming revision before issuance.
Responsible party: WMRC
Completion Date: 2/26

1.c Train HLWE Engineers on new WM Tech Review procedures.
Responsible party: WMRC
Completion Date: 3/5

2. Propose pathforward for matrix for usable chemicals in the tank farms that will not alter the composition of the ETF effluent.
Responsible party: WMRC & HLWE (AWW, MAH, KNU & DMB)
Completion Date: 3/12
Status: HLWE has begun work and WMRC will review for adequate for tank farm application.

3. Package all changes to application for transmittal to DHEC (including 2F)
Responsible party: WMRC/HLWE(DMB & JEG)
Completion Date: 2/22

4. Issue guidance to HLWE on how to make notification and package modifications to wastewater permit.
Responsible party: WMRC (MAH & DMB)
Completion Date: 3/12

5. Review RHLWE schedule w/ DOE to confirm an approved schedule for submittal to DHEC.
Responsible party: WMRC
Completion Date: 2/26

6. Track revision to 241-FH-7TQ procedure to ensure that it is implemented.
Responsible party: WMRC
Completion Date: Implementation of procedure.

Federal Facility Agreement

1.a Meet with DE representatives and HLWE Work Control personnel to discuss responsibilities and logistics for certifications.
Responsible party: WMRC (CBS)
Completion Date: Complete

1.b Info package for DE on certification mechanism.
Responsible party: WMRC (MAH)
Completion Date: 2/26

1.c DE to propose a program for certification.
Responsible party: DE (W Scott Gray)
Completion Date: 3/30

2.a Review WM Response to Leaks procedure for adequacy.
Responsible party: WMRC/WMO/HLWE
Completion Date: 3/19

2.b Propose revisions to leak procedures to ensure compliance.
Responsible party: WMRC
Completion Date: 3/19

3.a Develop Logic Diagram for the responses for leaks.
Responsible party: WMRC (DMB & RSM)
Completion Date: 3/2
Status: Subcontractor is underway. Requires additional scenarios for evaluation.

3.b Set up meeting with HLWE and Subcontractor for input to Logic Diagram.
Responsible party: WMRC (MAH)
Completion Date: 2/26

4. Review WM SIRIM procedures and recommend any revisions required.
Responsible party: WMRC (MAH & MJH)
Completion Date: 2/26

5. Submit Waste Removal Schedule to DHEC.
Responsible party: HWLE (MJM)
Completion Date: 90 Days from effecive date of FFA

Status: The effective date may be retrofitted to signing date of FFA (2/1). Making the schedule due on 5/2.

6. Identify and map all known spill sites with annual updates (first draft).
Responsible party: WMRC (EBD)
Completion Date: 3/28

Status: 75% of H-Area spill database has

Distribution:

TO:	CARY B. STEVENS	(STEVENS-CB-O5981 AT A1 AT SASRS2)
CC:	Ginny Ellis	(ELLIS-VE-W0928 AT A1 AT SASRS2)
CC:	WALTER A. WILSON	(WILSON-WA-O5215 @A1@SLSRP1)
CC:	Robert W. Wilson	(WILSON-RW-T4847 AT A1 AT SASRS2)
CC:	Arthur W. Wiggins, Jr.	(WIGGINS-AW-O6172 AT A1 AT SASRS2)
CC:	Kim S. Wierzbicki	(WIERZBICKI-KS-O6535 AT A1 AT SASRS2)
CC:	Bill Van Pelt	(VANPELT-WB-O7016 AT A1 AT SASRS2)
CC:	Kester Uzochukwu	(UZOCHUKWU-K-L1224 AT A1 AT SASRS2)
CC:	L.C. Thomas	(THOMAS-LC-O5194 AT A1 AT SASRS2)
CC:	Gerry F. Stejskal	(STEJSKAL-GF-Y6594 @A1@SLSRP1)
CC:	Joette G. Sonnenberg	(SONNENBERG-JG-O5770 AT A1 AT SASRS2)
CC:	Richard C. Shank	(SHANK-RC-Z8546 @A1@SLSRP1)
CC:	Rod M. Satterfield	(SATTERFIELD-RM-T3212 @A1@SLSRP1)
CC:	Roger K. Roosa	(ROOSA-RK-L4532 AT A1 AT SASRS2)
CC:	Luke T. Reid	(REID-LT-O8559 @A1@SLSRP1)
CC:	Carol A. Polson	(POLSON-CA-O5752 AT A1 AT SASRS2)
CC:	Mark S. Peters	(PETERS-MS-O5010 AT A1 AT SASRS2)
CC:	Bill Payne	(PAYNE-WL-Y7708 @A1@SLSRP1)
CC:	David T. O'Rear	(OREAR-DT-O4792 AT A1 AT SASRS2)
CC:	Robert S. Murphy	(MURPHY-RS-B9654 AT A1 AT SASRS2)
CC:	TOM MONAHON	(MONAHON-TM-O4411 @A1@SRXSS2)
CC:	Steven M. Mertz	(MERTZ-SM-A9202 AT A1 AT SASRS2)
CC:	Mark J. Mahoney	(MAHONEY-MJ-O5457 AT A1 AT SASRS2)
CC:	Brenda L. Lewis	(LEWIS-BL-O6503 AT A1 AT SASRS2)
CC:	Karen F. Lesko	(LESKO-KF-O7041 AT A1 AT SASRS2)
CC:	Charles G. Lampley 7-8550	(LAMPLEY-CG-O6174 AT A1 AT SASRS2)
CC:	Chuck Hayes	(HAYES-CR-Z9722 @A1@SLSRP1)
CC:	Michael J. Hagenbarth	(HAGENBARTH-MJ-L2326 AT A1 AT SASRS2)
CC:	Johnna E. Griffiths	(GRIFFITHS-JE-Y5542 AT A1 AT SASRS2)
CC:	Arthur S. Greer	(GREER-AS-Y6907 AT A1 AT SASRS2)
CC:	Arthur S. Greer	(GREER-AS-Y6907 AT A1 AT SASRS2)
CC:	TIMOTHY P. GAUGHAN	(GAUGHAN-TP-O8815 AT A1 AT SASRS2)
CC:	W. DANNY DUNAWAY	(DUNAWAY-WD-O7436 @A1@SLSRP1)
CC:	V.G. Dickert	(DICKERT-VG-O4857 AT A1 AT SASRS2)
CC:	Elizabeth B. DeWitt	(DEWITT-EB-L2262 AT A1 AT SASRS2)
CC:	Garry Davis	(DAVIS-G-O4089 @A1@SRXSS2)
CC:	John W. Cook	(COOK-JW-O9823 @A1@SLSRP1)
CC:	Joseph V. Cioffi	(CIOFFI-JV-B4664 @A1@SLSRP1)
CC:	Mario A. Ceravolo, 703-H	(CERAVOLO-MA-O7495 AT A1 AT SASRS2)
CC:	Dot Matthews	(MATTHEWS-DL-W0643 AT A1 AT SASRS2)
CC:	Thomas B. Caldwell	(CALDWELL-TB-Y6683 AT A1 AT SASRS2)
CC:	Frederick F. Cadek	(CADEK-FF-Y5022 @A1@SLSRP1)
CC:	W. Brent Boore	(BOORE-WB-O6688 AT A1 AT SASRS2)
CC:	Douglas M. Blue	(BLUE-DM-L4808 @A1@SRXSS2)
CC:	Cynthia Blair-McManus	(BLAIR MCMANUS-C-B8534 @A1@SASRS3)

5

CC: Marcia B. Birk (BIRK-MB-Y9793 AT A1 AT SASRS2)
CC: D T BIGNELL (BIGNELL-DT-O5579 @A1@SLSRP1)
CC: Chris J. Baker (BAKER-CJ-B4996 @A1@SRXSS2)
CC: Carrie A. Amacher (AMACHER-CA-C9103 @A1@SLSRP1)

OSR 3-4A-W (Rev1-89)

W-0517

WESTINGHOUSE SAVANNAH RIVER COMPANY

INTER-OFFICE MEMORANDUM

ESH-FSS-93-0089

February 17, 1993

TO: M. A. HUNTER, 742-6G

FROM: C. R. HAYES, 703-18A CR Hayes
W. L. PAYNE, 742-A W.L. Payne

USE OF THE EMERGENCY PREPAREDNESS PLAN FOR THE F/H HIGH LEVEL WASTE TANK FARMS (U)

Ref.: Memo, Hunter to Hayes / Payne, 2/11/93

The incorporation of the Comprehensive Emergency Preparedness Plan (CEPP) into Waste Management procedures to meet the requirement outlined in Special Condition #9 of Construction Permit #17424-IW, is acceptable to the Environmental Protection Department (EPD). Per the referenced memo, it is understood that the CEPP will allow response to known emergency situations and will be updated as necessary to include new information or changing conditions.

As you are aware, the Tank Farm Facilities will remain under RCRA interim status until the permit-to-operate is issued. Therefore, the requirement to maintain a contingency plan remains in effect until the operating permit is received. However, please accept this memo as EPD's concurrence to replace the RCRA Contingency Plan with the CEEP upon receipt of the SCDHEC permit-to-operate.

If there are any questions, please do not hesitate to contact one or both of us.

CRH:pr

CC:

M. B. Birk, 742-6G
D. M. Blue, 742-6G
F. R. Cadek, 719-4A
S. J. Carroll, 742-A
S. S. Cathey, 703-H
L. S. Coward, 703-18A
G. Davis, 703-F
M. D. Dukes, 742-A
W. D. Dunaway, 703-18A
E. R. Ennis, 241-120H
T. P. Gauaghan, 241-152H
A. R. Gough, 992-3W
M. Hawkins, 742-A
C. Hyder, 703-13C
M. E. Johnson, 742-A
J. L. Keyes, 742-A
C. G. Lampley, 241-120H
B. M. Lawrence, 742-A
K. F. Lesko, 703-H
B. L. Lewis, 703-H
W. J. Maloney, 742-A
S. M. Mertz, 724-9E
W. A. Morrison, 241-100F
T. M. Monahon, 703-H
J. V. Odum, 742-A
M. S. Peters, 703-F
J. S. Roberts, 742-A
R. K. Roosa, 241-120H
R. M. Satterfield, 719-4A
C. B. Stevens, 742-6G
K. S. Wierzbicki, 742-6G
R. W. Wilson, 703-H
W. A. Wilson, 703-H
G. T. Wright, 241-120H
Records Administration, 773-52A
EPD Fileroom, 742-A

OSR 3-4A-W (Rev 1-89)

W-0517

WESTINGHOUSE SAVANNAH RIVER COMPANY

INTER-OFFICE MEMORANDUM

ESH-FSS-93-0088

February 17, 1993

TO: M. A. HUNTER, 742-6G

FROM: C. R. HAYES, 703-18A CR Hayes
W. L. PAYNE, 742-A W.L. Payne

USE OF WASTE MANAGEMENT OPERATING AND MAINTENANCE PROCEDURES FOR THE F/H HIGH LEVEL WASTE TANK FARMS (U)

Ref.: Memo, Hunter to Hayes / Payne, 2/16/93

The use of existing Waste Management operating and maintenance procedure files to meet the requirements outlined in Special Condition #1 of Construction Permit #17424-IW is acceptable to the Environmental Protection Department (EPD). EPD understands that it is impractical to have one bound manual for this use. This arrangement has been approved by SCDHEC in the past for wastewater treatment facilities in S and Z-Areas.

If there are any questions, please do not hesitate to contact one or both of us.

CRH:pr

CC:

M. B. Birk, 742-6G
D. M. Blue, 742-6G
F. R. Cadek, 719-4A
S. J. Carroll, 742-A
S. S. Cathey, 703-H
L. S. Coward, 703-18A
G. Davis, 703-F
M. D. Dukes, 742-A
W. D. Dunaway, 703-18A
E. R. Ennis, 241-120H
T. P. Gauaghan, 241-152H
A. R. Gough, 992-3W
M. Hawkins, 742-A
C. Hyder, 703-13C
M. E. Johnson, 742-A
J. L. Keyes, 742-A
C. G. Lampley, 241-120H
B. M. Lawrence, 742-A
K. F. Lesko, 703-H
B. L. Lewis, 703-H
W. J. Maloney, 742-A
S. M. Mertz, 724-9E
W. A. Morrison, 241-100F
T. M. Monahon, 703-H
J. V. Odum, 742-A
M. S. Peters, 703-F
J. S. Roberts, 742-A
R. K. Roosa, 241-120H
R. M. Satterfield, 719-4A
C. B. Stevens, 742-6G
K. S. Wierzbicki, 742-6G
R. W. Wilson, 703-H
W. A. Wilson, 703-H
G. T. Wright, 241-120H
Records Administration, 773-52A
EPD Fileroom, 742-A

OSR 3-4A-W (Rev 1-89)

W-0517 File

WESTINGHOUSE SAVANNAH RIVER COMPANY

INTER-OFFICE MEMORANDUM

WER-HLE-930568

February 16, 1993

Rec'd 2/26

To: [redacted]

From: M. A. Hunter, 742-6G MAH

Quality Assurance/Quality Control Package for the ITP Liner Extension (U)

Please find attached a compilation of information regarding the Quality Assurance/Quality Control procedures used during the liner extension for the In-Tank Precipitation Hold Tank area. This information is provided to fulfill Special Condition #8 of the Wastewater Construction Permit for the F/H-Area Tank Farms. More information may be provided than is necessary to fulfill this requirement, please fill free to reduce the package as you see appropriate.

CC: w/o attachments
F. R. Cadek, 719-4A
G. T. Wright, 241-120H
S. S. Cathey, 703-H
R. M. Satterfield, 719-4A
T. M. Monahon, 703-H
R. W. Wilson, 703-H
J. V. Odum, 742-A
W. D. Dunaway, 703-18A
M. D. Dukes, 742-A
M. E. Johnson, 742-A
K. S. Wierzbicki, 742-6G
B. L. Lewis, 703-H
M. S. Peters, 703-F
W. A. Wilson, 703-H
R. K. Roosa, 241-120H
K. F. Lesko, 703-H
G. Davis, 703-F
W. A. Morrison, 241-100F
E. R. Ennis, 241-120H
C. G. Lampley, 241-120H
C. Hyder, 703-13C
C. B. Stevens, 742-6G
T. P. Gauaghan, 241-152H
M. B. Birk, 724-7E
S. M. Mertz, 724-9E
D. M. Blue, 742-6G
HLWE Fileroom, 703-H*
Filecode: 175.15

* With Attachments.

REVIEW/APPROVAL ROUTING SLIP

Title: QA/QC Package for the ITP Liner Extension

Author's Name: Matthew Hunter Phone: 7-0520 Location: 742-6G Date: 2/16/93

LIQUID WASTE REGULATORY COMPLIANCE MANAGER reviews for accuracy of content, format, addressee and additional reviews as appropriate.	Signature	2/16/93 Date
WMRC MANAGER reviews for accuracy of content, format, addressee and additional reviews as appropriate.	Signature	2/16/93 Date
ITP COGNIZANT ENGINEERING MANAGER reviews for accuracy of content format, addressee and additional reviews as appropriate.	W.B. Van Pelt Signature	2-17-93 Date
ITP/ESP ~~ITP HLW COGNIZANT~~ ENGINEERING MANAGER reviews for accuracy of content format, addressee and additional reviews as appropriate.	Signature	2/17/93 Date
ITP ~~HLW~~ ENGINEERING MANAGER reviews for accuracy of content format, addressee and additional reviews as appropriate.	Signature	2/18/93 Date
IN TANK PRECIPITATION FACILITY MANAGER reviews for accuracy of content format, addressee and additional reviews as appropriate.	Signature	2/18/93 Date
ITP PROGRAM ~~HIGH LEVEL WASTE OPERATIONS~~ MANAGER reviews for accuracy of content format, addressee and additional reviews as appropriate.	Signature	2/22/93 Date
HIGH LEVEL WASTE MANAGER reviews for accuracy of content, format, addressee and additional reviews as appropriate.	Signature	2/22/93 Date

QA/QC PACKAGE FOR THE ITP LINER EXTENSION

Part A

Contains memos regarding preliminary design information which was sent to the SRS Design Agency on liner requirements. Recommends essential materials and design parameters.

"Proposed Containment Design for ITP's Hold Tank Liner"
Gaughan to Sammons, 3/8/91.

"DCR-375 Hold Tank Liner Modification (Additional Information)" Gaughan to Exner, 11/4/91.

Copies of Vendor Specification Sheet for:
- Masterflow ® 928 Grout
- Flakeline ® 222G
- Flakeline ® 600

"INFORMATION ONLY"

Part B

Contains final Field Inspection Reports and Records for the following which ensures work performed within appropriate design parameters:

- Liner Extension
- Liner Anchor and Supports
- Welding Pipe Supports & Electrical Hangers
- Component Supports/Structural Members/HVAC Duct
- Liner Protective Coatings

Part C

Contains Quality Assurance/Quality Control procedures for work involving the installation of the liner in the Hold Tank area:

Procedure Manual 1 E 6 "Construction Management Department Manual - Total Quality"
- Section CMP 03-2.6 'Protective Coatings'
- Section CMP 03-4.11 'Welding of Pipe Supports, Electrical Hangers, Component Supports, Structurual Members, and HVAC Duct'
- Section CMP 03-2.1 'Concrete Anchors'
- Section CMP 03-1.10 'Pre-Turnover Test Control'

PART A

Section A

INTER-OFFICE MEMORANDUM
SAVANNAH RIVER SITE

3/8/91

To: M.B. Sammons, 241-120H

From: Tim Gaughan, 241-120H

Proposed Containment Design for ITP's Hold Tank Liner

Please find attached two sketches detailing the present liner system in the ITP Hold Tank Area and the proposed system that could meet SCDHEC secondary requirements.

To arrive at the proposed new design, the "Flashing" that surrounds the liner in the Hold Tank Area liner will be removed entirely. A "Baker Rod" will be installed in the space between the Stainless Steel liner and the concrete wall to insure that any grout poured into this space does not seep underneath towards the floor. The exposed sides of the 'Baker Rod' and the concrete wall will then be coated with an Epoxy prior to grout addition. Enough grout (928 Grout Master Flow) will be poured to completely fill the space between the wall and the 'Baker Rod'. The top of this concrete will be angled back towards the concrete wall. A sealing epoxy (Flakeline 222G) will then be applied over this angled section of grout. Another Epoxy (Flakeline 600) will then be applied over the grout, a small portion of the Stainless Steel Liner Wall and approximately 9 inches up the vertical side of the Hold Tank Area's concrete wall.

This system of 15" of total vertical containment along each wall of the Hold Tank area will provide for total containment of the largest vessel in that area (12,000 gallons).

"INFORMATION ONLY"

Present Containment System in the Hold Tank Area of ITP

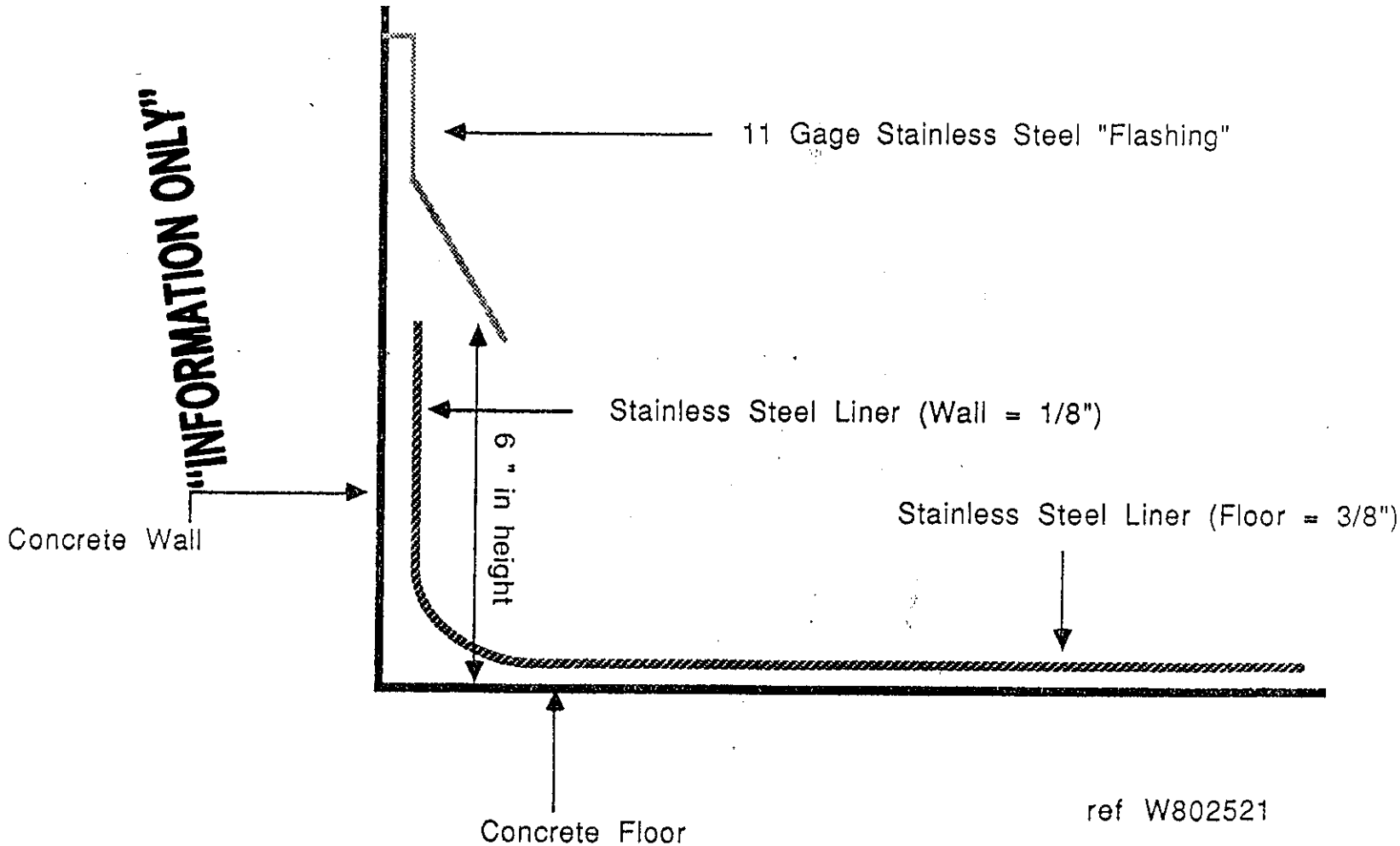

Proposed Containment System for ITP's Hold Tank Area

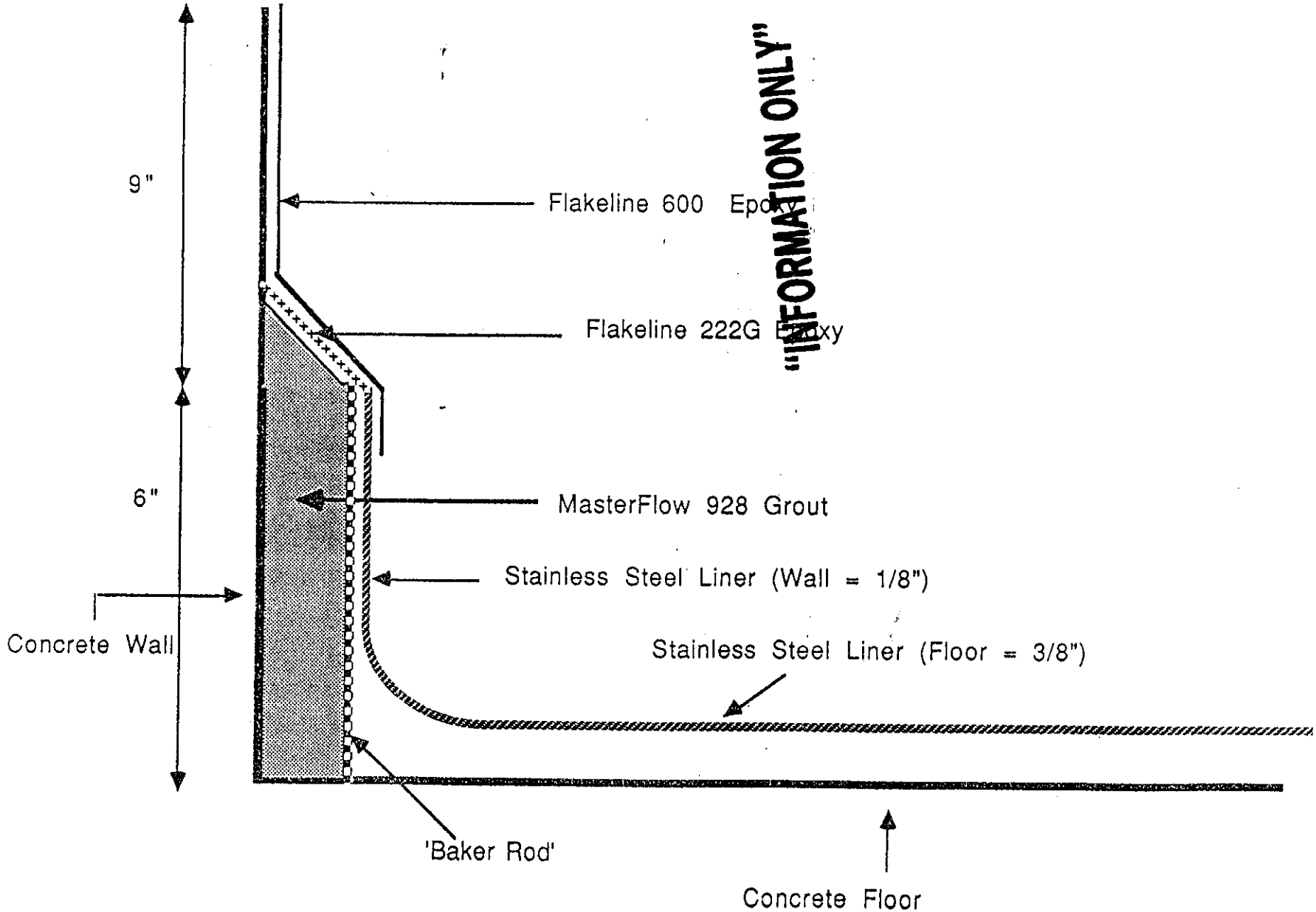

"INFORMATION ONLY"

INTER-OFFICE MEMORANDUM
SAVANNAH RIVER SITE

November 4, 1991

"INFORMATION ONLY"

To: G.A. Exner, 241-120H

From: T.P. Gaughan, 241-120H TPG

DCR- 375 Hold Tank Liner Modifications (Additional Information)

Please find attached two additional sketches (Figs 1 &2) which are to be added to the information package for DCR #375. The information recommends that the new liner be brought up ~ 5 inches and sealed to the wall of the second step using the same process (Baker Rod-Grout- Epoxy) as the rest of the Hold Tank room. See the attached sketches for additional information.

I can be reached at 7-1638 with any additional questions.

CC:

W.B. Van Pelt, 241-120H
M.K. Keefer, 241-119H

"INFORMATION ONLY"

Figure 1. Liner Modifications in Hold Tank Area

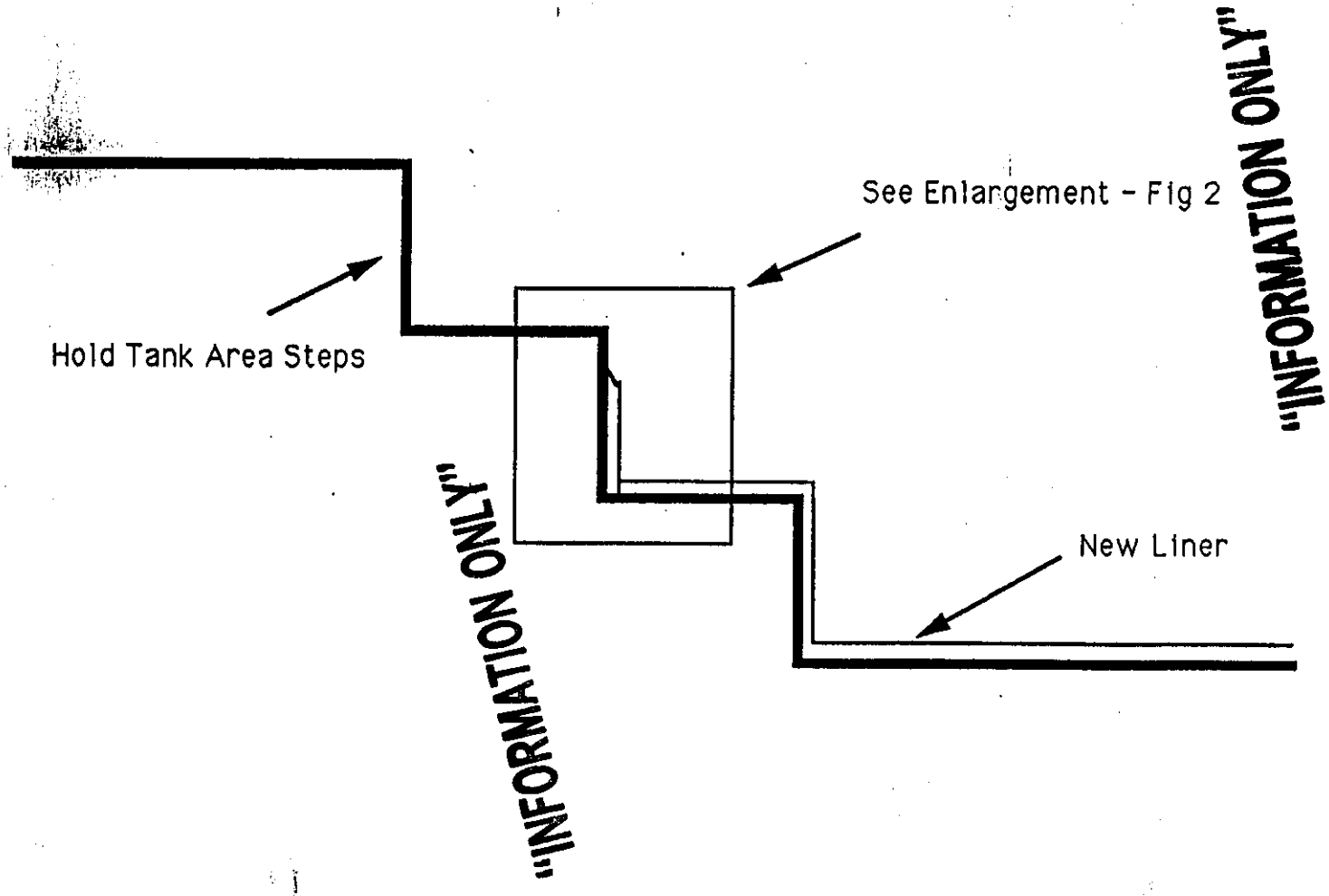

Figure 2. Enlargement of Stainless Steel Liner for Second Step in Hold Tank Area

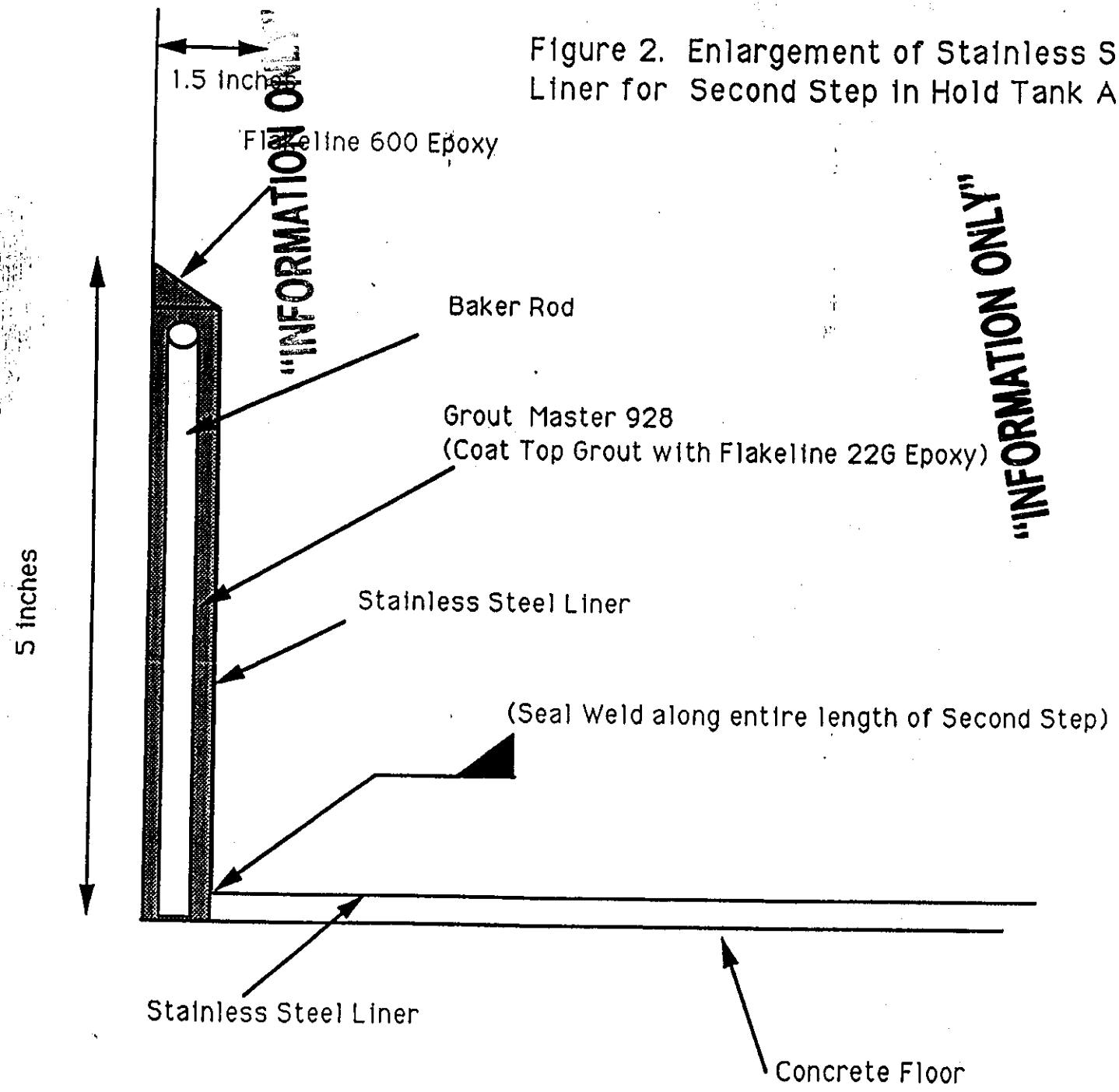

"INFORMATION ONLY"

"INFORMATION ONLY"

OSR 3-4A-W (Rev 1-89)

WESTINGHOUSE SAVANNAH RIVER COMPANY

INTER-OFFICE MEMORANDUM

WER-HLE-930567

February 16, 1993

To: C. R. Hayes, 703-18A
W. L. Payne, 742-A

DRAFT

From: M. A. Hunter, 742-6G

Use of Operation and Maintenance Procedures as the F/H-Area Tank Farms Operations and Maintenance Manual (U)

Per requirements in the Permit to Operate (#17,424 - IW) the F/H-Area Tank Farms as an Industrial Wastewater Facility, the facility must maintain an Operations and Maintenance (O&M) Manual. Special Condition #1 of the permit specifically states:

> The permittee shall maintain at each permitted facility a complete Operations and Maintenance Manual for the waste treatment system. The manual shall be made available for on-site review during normal working hours. The manual shall contain operations and maintenance instructions for all equipment and appurtenances associated with the waste treatment system. The manual shall contain a general description of the treatment process(es), operating characteristics that will produce maximum treatment efficiency and corrective action to be taken should operating difficulties be encountered.

Due to the size and number of procedures used for the operations and maintenance of the facility, Waste Management stores these procedures in filing cabinets located in several places. In order to provide efficient operation of the tank farms, the operations procedures and those for maintenance are kept in separate locations within the facility boundaries. The Operation procedure files can be found in each of the control rooms (242-1F, 242-1H, 241-18F, 241-28H, 241-82H) as well as the administrative buildings (703-F, 703-H, and 705-H). The maintenance procedures for the facilities can be found in building 706-6H. For these reasons, Waste Management's procedure files will be the O&M Manual for the tank farms. These procedure files meet all specifications in the Special Condition cited above which requires the O&M Manual.

All procedures used for the operations and maintenance of Waste Management facilities are controlled documents maintained and distributed by the High Level Waste Document Control group. A control system has been established per the requirements outlined in the WM-PMT Administrative Manual, SW6. Specific procedural controls include:

2

- Unique identification and revision numbers for all procedures.
- Controlled distribution, procedures and indexes issued daily to specified personnel/locations.
- Controlled procedure indexes, updated and reissued for each new, revised, or canceled procedure.
- Revision verification; all procedures include steps for users to verify latest revisions against controlled procedures index prior to use.
- Quarterly audits performed at all field file locations.

Specific records management controls include:

- Departmental records are identified on a Records Inventory and Disposition Schedule (RIDS).
- Completed records are boxed and forwarded to Interim Storage for processing prior to forwarding to Site Storage. Processing includes documentation of individual records.
- All regulatory-related records are listed on a facility-specific matrix and completion is verified on a monthly basis.

Your concurrence is requested to ensure that the current Waste Management Operation procedure filing system will meet the intent of Special Condition #1 of the F/H-Area Tank Farm Wastewater Construction Permit. Please provide your concurrence, either written or All-In-One, by 2/17/1993.

INTER-OFFICE MEMORANDUM
Savannah River Site

Date: 16-Feb-1993 04:51pm EST
From: Matthew A. Hunter
HUNTER-MA-L2335 AT A1 AT SASRS2
Dept: WMRC
Tel No: 557-0520/bp#6761

TO: See Below

Subject: Update on TFWWP and FFA Action Items - 2/16/93

The following is a revised listing of the actions associated with preparation/compliance with the Tank Farm Wastewater Permit (TFWWP) and the Federal Facility Agreement (FFA). This list includes responsible parties and target completion dates for each actions. The list will be updated on a weekly basis and will include a status line where applicable. The listing is broken down in to essential items that require resolution prior to the issuance the operating permit and non-essential items that may be resolved after the permit is issued. Items that have been completed will be carry over one time and then will be deleted.

Wastewater Permit (Essential)

1. Ensure WMO is capable of meeting requirements for Operators-On-Duty.
Responsible party: WMO/WMRC (WAW/MAH)
Completion Date: 2/18
Status: WMRC is working with EPD & ESH&QA Training to resolve potential problems.

2.a Issue Memo to File documenting that the WMO and WMM procedure files will be used as the O&M Manual for the tank farms.
Responsible party: WMRC (MAH & DMB)
Completion Date: Complete

2.b Receive concurrence on use of WMO procedures as O&M Manual.
Responsible party: EPD (CRH & WLP)
Completion Date: 2/18
Status: Verbal concurrence received, awaiting written concurrence from EPD.

3.a Finalize OIC Logbook Format.
Responsible party: WMRC (MAH)
Completion Date: Complete

3.b Have OIC Logbook bound, Quarterly basis (93 days).
Responsible party: WMRC (DMB)
Completion Date: 2/18
Status: Contact has been made with the print shop and will have one day turn around.

4. Issue completed OIC Designation Form.
Responsible party: WMRC (MAH)
Completion Date: Complete

5. Review Best Management Practice plan to ensure DOE is in concurrence. (Condition 3)
Responsible party: WMRC (DMB)
Completion Date: 2/17
Status: Awaiting completion of DOE review.

6. Issue approved memo for withdrawal of Tank Farms from RCRA Part A application. (Condion 10)
Responsible party: WMRC (DMB)
Completion Date: Complete

7.a Obtain services of Professional Engineer to stamp prints requested by DHEC.
Responsible party: WMRC (MAH & CBS)
Completion Date: Complete

7.b Certify requested prints.
Responsible party: Rich Stegen (PE, Parson/C. T. Main)
Completion Date: 2/19
Status: Contact has been made w/ Rich to ensure he is ready to stamp prints.

8.a Invite EPD for Pre-Final Inspection.
Responsible party: WMRC (MAH)
Completion Date: Complete
Status: EPD has walkdown tank farms, found no deficiencies and thought things looked good.

8.b Invite DHEC for Final Inspection.
Responsible party: EPD
Completion Date: 2/18
Status: Following Pre-Inspection, EPD will if WM is ready.

× 9. PE certification for ITP, NWTF & H/S IAL for final inspection.
Responsible party: ITP: Complete, NWTF & H/S IAL: (Gupta/MAH)
Completion Date: 2/18

10. Route QA/QC Package (ITP Liner) for Approval.
Responsible party: WMRC (MAH)
Completion Date: 2/18
Status: Memo has begun routing.

11. Receive concurrence on use of Emergency Preparedness Plan instead of Contingency Plan.
Responsible party: EPD (CRH & WLP)
Completion Date: 2/18
Status: Verbal concurrence received, awaiting written concurrence from EPD.

12.a Issue package with OICs on responsibilities.
Responsiblie party: WMRC (DMB)
Completion Date: Complete

12.a Meet with OIC/AOICs and FMs to discuss responsibilities.

Responsiblie party: WMRC (DMB)
Completion Date: 2/26

13. Determine RCRA training requirements after issuance of TFWWP.
Responsible party: WMRC (DMB/MBB)
Completion Date: 2/26

14.a Label Procedure files and index as O&M Manual.
Responsible party: WMO (LPB)
Completion Date: 2/18

14.b Place memo documenting use of procedure files as O&M Manual in indexes.
Responsible party: WMO (LPB)
Completion Date: 2/18

Wastewater Permit (Non-Essential)

1.a Track revision to WM Tech Review that ensures all modifications that will effect the description in the wastewater permit application or will change the integrity description in the tank assessment will be recognized and caught. (This will trigger any required PE certifications per the FFA.) [See 1.b FFA Section]
Responsible party: WMRC (MAH & MJH)
Completion Date: Issuance of revision

1.b Brief HLWE Engineers on upcoming revision before issuance.
Responsible party: WMRC
Completion Date: 2/26

1.c Train HLWE Engineers on new WM Tech Review procedures.
Responsible party: WMRC
Completion Date: Once revised procedure is issued.

2. Propose pathforward for matrix for usable chemicals in the tank farms that will not alter the composition of the ETF effluent.
Responsible party: WMRC & HLWE (AWW, MAH, KNU & DMB)
Completion Date: 3/12
Status: HLWE has begun work and WMRC will review for adequate for tank farm application.

3. Package all changes to application for transmittal to DHEC (including 2F)
Responsible party: WMRC/HLWE(DMB & JEG)
Completion Date: 2/18

4. Issue guidance to HLWE on how to make notification and package modifications to wastewater permit.
Responsible party: WMRC (MAH & DMB)
Completion Date: 3/12

5. Review RHLWE schedule w/ DOE to confirm an approved schedule for submittal to DHEC.
Responsible party: WMRC
Completion Date: 2/26

6. Track revision to 241-FH-7TQ procedure to ensure that it is implemented.
Responsible party: WMRC
Completion Date: Implementation of procedure.

Federal Facility Agreement

1. Meet with DE representatives and HLWE Work Control personnel to discuss responsibilities and logistics for certifications.
   Responsible party: WMRC (CBS)
   Completion Date: 2/19
   Status: Meeting scheduled for 2/18.

2.a Review WM Response to Leaks procedure for adequacy.
   Responsible party: WMRC/WMO/HLWE
   Completion Date: Pending WMRP/EPD Meeting

2.b Propose revisions to leak procedures to ensure compliance.
   Responsible party: WMRC
   Completion Date: Pending WMRP/EPD Meeting

3.a Develop Logic Diagram for the responses for leaks.
   Responsible party: WMRC (DMB & RSM)
   Completion Date: 3/2
   Status: Subcontractor is underway. Requires additional scenarios for evaluation.

3.b Set up meeting with HLWE and Subcontractor for input to Logic Diagram.
   Responsible party: WMRC (MAH)
   Completion Date: 2/26

4. Review WM SIRIM procedures and recommend any revisions required.
   Responsible party: WMRC (MAH & MJH)
   Completion Date: 2/26

5. Submit Waste Removal Schedule to DHEC.
   Responsible party: HWLE (MJM)
   Completion Date: 90 Days from effecive date of FFA
   Status: The effective date may be retrofitted to signing date of FFA (2/1). Making the schedule due on 5/2.

6. Identify and map all known spill sites with annual updates (first draft).
   Responsible party: WMRC (EBD)
   Completion Date: 3/28

Distribution:

TO:	CARY B. STEVENS	(STEVENS-CB-O5981 AT A1 AT SASRS2)
CC:	Ginny Ellis	(ELLIS-VE-W0928 AT A1 AT SASRS2)
CC:	WALTER A. WILSON	(WILSON-WA-O5215 @A1@SLSRP1)
CC:	Robert W. Wilson	(WILSON-RW-T4847 AT A1 AT SASRS2)
CC:	Arthur W. Wiggins, Jr.	(WIGGINS-AW-O6172 AT A1 AT SASRS2)
CC:	Kim S. Wierzbicki	(WIERZBICKI-KS-O6535 AT A1 AT SASRS2)
CC:	Bill Van Pelt	(VANPELT-WB-O7016 AT A1 AT SASRS2)
CC:	Kester Uzochukwu	(UZOCHUKWU-K-L1224 AT A1 AT SASRS2)
CC:	L.C. Thomas	(THOMAS-LC-O5194 AT A1 AT SASRS2)
CC:	Gerry F. Stejskal	(STEJSKAL-GF-Y6594 @A1@SLSRP1)
CC:	Joette G. Sonnenberg	(SONNENBERG-JG-O5770 AT A1 AT SASRS2)
CC:	Richard C. Shank	(SHANK-RC-Z8546 @A1@SLSRP1)
CC:	Rod M. Satterfield	(SATTERFIELD-RM-T3212 @A1@SLSRP1)

CC:	Roger K. Roosa	(ROOSA-RK-L4532 AT A1 AT SASRS2)
CC:	Luke T. Reid	(REID-LT-O8559 @A1@SLSRP1)
CC:	Carol A. Polson	(POLSON-CA-O5752 AT A1 AT SASRS2)
CC:	Mark S. Peters	(PETERS-MS-O5010 AT A1 AT SASRS2)
CC:	Bill Payne	(PAYNE-WL-Y7708 @A1@SLSRP1)
CC:	David T. O'Rear	(OREAR-DT-O4792 AT A1 AT SASRS2)
CC:	Robert S. Murphy	(MURPHY-RS-B9654 AT A1 AT SASRS2)
CC:	TOM MONAHON	(MONAHON-TM-O4411 @A1@SRXSS2)
CC:	Steven M. Mertz	(MERTZ-SM-A9202 AT A1 AT SASRS2)
CC:	Mark J. Mahoney	(MAHONEY-MJ-O5457 AT A1 AT SASRS2)
CC:	Brenda L. Lewis	(LEWIS-BL-O6503 AT A1 AT SASRS2)
CC:	Karen F. Lesko	(LESKO-KF-O7041 AT A1 AT SASRS2)
CC:	Charles G. Lampley 7-8550	(LAMPLEY-CG-O6174 AT A1 AT SASRS2)
CC:	Chuck Hayes	(HAYES-CR-Z9722 @A1@SLSRP1)
CC:	Michael J. Hagenbarth	(HAGENBARTH-MJ-L2326 AT A1 AT SASRS2)
CC:	Johnna E. Griffiths	(GRIFFITHS-JE-Y5542 AT A1 AT SASRS2)
CC:	Arthur S. Greer	(GREER-AS-Y6907 AT A1 AT SASRS2)
CC:	Arthur S. Greer	(GREER-AS-Y6907 AT A1 AT SASRS2)
CC:	TIMOTHY P. GAUGHAN	(GAUGHAN-TP-O8815 AT A1 AT SASRS2)
CC:	W. DANNY DUNAWAY	(DUNAWAY-WD-O7436 @A1@SLSRP1)
CC:	V.G. Dickert	(DICKERT-VG-O4857 AT A1 AT SASRS2)
CC:	Elizabeth B. DeWitt	(DEWITT-EB-L2262 AT A1 AT SASRS2)
CC:	Garry Davis	(DAVIS-G-O4089 @A1@SRXSS2)
CC:	John W. Cook	(COOK-JW-O9823 @A1@SLSRP1)
CC:	Joseph V. Cioffi	(CIOFFI-JV-B4664 @A1@SLSRP1)
CC:	Mario A. Ceravolo, 703-H	(CERAVOLO-MA-O7495 AT A1 AT SASRS2)
CC:	Dot Matthews	(MATTHEWS-DL-W0643 AT A1 AT SASRS2)
CC:	Thomas B. Caldwell	(CALDWELL-TB-Y6683 AT A1 AT SASRS2)
CC:	Frederick F. Cadek	(CADEK-FF-Y5022 @A1@SLSRP1)
CC:	W. Brent Boore	(BOORE-WB-O6688 AT A1 AT SASRS2)
CC:	Douglas M. Blue	(BLUE-DM-L4808 @A1@SRXSS2)
CC:	Cynthia Blair-McManus	(BLAIR_MCMANUS-C-B8534 @A1@SASRS3)
CC:	Marcia B. Birk	(BIRK-MB-Y9793 AT A1 AT SASRS2)
CC:	D T BIGNELL	(BIGNELL-DT-O5579 @A1@SLSRP1)
CC:	Chris J. Baker	(BAKER-CJ-B4996 @A1@SRXSS2)
CC:	Carrie A. Amacher	(AMACHER-CA-C9103 @A1@SLSRP1)

OSR 3-4A-W (Rev 1-89)

WESTINGHOUSE SAVANNAH RIVER COMPANY

INTER-OFFICE MEMORANDUM

WER-HLE-930259

February 16, 1993

To: J.V. Odum (742-A)

From: K.S. Wierzbicki (742-6G) KSW

Removal of Tank Farms from RCRA Part A Permit (U)

Per Special Condition #10 of the Wastewater Construction Permit (#17,424-IW) for the F and H-Area High-Level Radioactive Waste Tank Farms and Section IX of the Federal Facility Agreement, the Savannah River Site is required to amend its RCRA Part A Permit. The intent of the admendment is to delete the above referenced Tank Systems from the Part A Permit.

Waste Management Regulatory Compliance formally requests the Environmental Protection Department issue notice to South Carolina Department of Health and Environmental Control detailing the tank farms removal from interim status. This notification should take place upon receipt of the Wastewater Operating Permit.

DMB:db

CC:

N. C. Boyter, 703-A
R. R. Campbell, 773-A
W. B. Boore, 719-4A
C. L. Peckinpaugh, 719-4A
F. R. Cadek, 719-4A
G. T. Wright, 241-120H
D. B. Amerine, 704-S
S. S. Cathey, 703-H
R. M. Satterfield, 719-4A
T. M. Monahon, 703-H
J. F. Jackson, 992-3W
A. Gough, 992-3W
J. S. Roberts, 742-A
R. W. Wilson, 703-H
H. S. Etheridge, 742-A
J. B. Hutchison, 742-A
A. B. Parrott, 742-A
J. D. Heffner, 735-16A
D. E. Gordon, 742-A
W. D. Dunaway, 703-18A
W. C. Reinig, 742-A
M. D. Dukes, 742-A
M. E. Johnson, 742-A
K. S. Wierzbicki, 742-6G
B. L. Lewis, 703-H
P. D. d'Entremont, 703-H
M. S. Peters, 703-F
W. A. Wilson, 703-H
R. K. Roosa, 241-120H
K. F. Lesko, 703-H
G. Davis, 703-F
W. A. Morrison, 241-100F
E. R. Ennis, 241-120H
C. G. Lampley, 241-120H
C. Hyder, 703-13C
S. M. Mertz, 724-9E
D. M. Blue, 742-6G
S. J. Carroll, 742-A
L. B. Curtis, 742-A
M. S. Dodgen, 742-A
R. L. Fanning, 742-A
N. D. Ferguson, 742-A
A. V. Guanlao, 742-A
L. C. Haney, 742-A
M. Hawkins, 742-A
G. P. Jernigan, 742-A
M. E. Johnson,742-A
B. M. Lawrence, 742-A
W. J. Maloney, 742-A
J. R. McConathy, 742-A
C. A. Mooney, 742-A
H.W. Morris, 742-A
D. V. Osteen, 742-A
J. G. Suhm, 742-A
P. A. Vanbrackle, 742-A
P. J. West, 742-A
K. A. Wolfe, 742-A
W. L. Payne, 742-A
C. R. Hayes, 703-18A
J. A. Pike, 703-H
M. B. Birk, 724-7E
C. B. Stevens, 742-6G
T. P. Gaughan, 241-152H
L. P. Bradley, 703-13C
HLWE Fileroom,703-H
File Code 175.15

INTER-OFFICE MEMORANDUM
Savannah River Site

Date: 16-Feb-1993 05:29pm EST
From: Matthew A. Hunter
HUNTER-MA-L2335 AT A1 AT SASRS2
Dept: WMRC
Tel No: 557-0520/bp#6761

TO: See Below

Subject: Operator for the tank farms

Per our conversations, Waste Management proposes the following for Operator Coverage for the tank farm facilities at initial implementation of the wastewater permit, until full coverage (One "A" Level/shift/facility) can be provided in 6/94, as noted in the previous All-In-One.

- OIC on days for each of three facilities (HTF, FTF, & ITP).
- OIC will provide 24 hour, seven day a week, on call coverage and can be at the facility within 30 to 45 minutes of being called.
- The OIC will sign the logbook on a daily basis, seven days a week.
- All operators for these facilities are certified as A, B, C, or D and/or are in the training program. They are working towards "A" level certification.

This is High Level Waste's best workable position to meet the DHEC wastewater operator requirements as we understand them. Please review for our 9:30 telecon. Thanks in advance.

Distribution:

TO:	Bobby R. James	(JAMES-BR-O7951 AT A1 AT SASRS2)
TO:	Bill Payne	(PAYNE-WL-Y7708 @A1@SLSRP1)
CC:	Dot Matthews	(MATTHEWS-DL-W0643 AT A1 AT SASRS2)
CC:	Rod M. Satterfield	(SATTERFIELD-RM-T3212 @A1@SLSRP1)
CC:	WALTER A. WILSON	(WILSON-WA-O5215 @A1@SLSRP1)
CC:	Kim S. Wierzbicki	(WIERZBICKI-KS-O6535 AT A1 AT SASRS2)
CC:	Douglas M. Blue	(BLUE-DM-L4808 AT A1 AT SASRS2)
CC:	CARY B. STEVENS	(STEVENS-CB-O5981 AT A1 AT SASRS2)
CC:	Chuck Hayes	(HAYES-CR-Z9722 @A1@SLSRP1)

Westinghouse
Savannah River Company

P. O. Box 616
Aiken, SC 29802

Environmental Quality Control Office
Lower Savannah District
218 Beaufort Street, N. E.
Aiken, South Carolina 29801

Wastewater Treatment Facility

PERMIT NO. #17,424 - IW
PLANT SRS ITP Facility
OWNER U. S. Department Of Energy
COUNTY Aiken, SC

The operator-in-charge of the above described plant will be T. K. Bragg who holds a valid A-Level Physical/Chemical (#1421) treatment certification issued by the South Carolina Environmental Certification Board.

The plant will be operated in compliance with all State of South Carolina rules and regulations for Wastewater Treatment Facilities, and with all other operating and NPDES permit conditions.

In case of an emergency during non-working hours, T. K. Bragg may be reached at the following location:

ADDRESS	PHONE
Route 1 Box 132, Sylvania, GA 30467	(912) 829-4626

Should the operator in charge of this plant change for any reason, Westinghouse Savannah River Company will notify the Lower Savannah District Environmental Quality Control Office and the Board of Certification in writing. This individual has been informed that failure to properly carry out his/her duties as operator will result in the Environmental Quality Control Office requesting appropriate action by the South Carolina Environmental Certification Board, which could result in the revocation or suspension of his/her license.

M. D. Dukes

M. D. Dukes, Manager
Environmental Support Section
Environmental Protection Department

DATE: 2/16/93

Westinghouse
Savannah River Company

P. O. Box 616
Aiken, SC 29802

Environmental Quality Control Office
Lower Savannah District
218 Beaufort Street, N. E.
Aiken, South Carolina 29801

Wastewater Treatment Facility

PERMIT NO. #17,424 - IW
PLANT SRS H-Area Tank Farm
OWNER U. S. Department Of Energy
COUNTY Aiken, SC

The operator-in-charge of the above described plant will be Ted H. Lee who holds a valid A-Level Physical/Chemical (#22) treatment certification issued by the South Carolina Environmental Certification Board.

The plant will be operated in compliance with all State of South Carolina rules and regulations for Wastewater Treatment Facilities, and with all other operating and NPDES permit conditions.

In case of an emergency during non-working hours, Ted H. Lee may be reached at the following location:

ADDRESS	PHONE
Route 8 Box 206, Sylvania, GA 30467	(912) 863-3861

Should the operator in charge of this plant change for any reason, Westinghouse Savannah River Company will notify the Lower Savannah District Environmental Quality Control Office and the Board of Certification in writing. This individual has been informed that failure to properly carry out his/her duties as operator will result in the Environmental Quality Control Office requesting appropriate action by the South Carolina Environmental Certification Board, which could result in the revocation or suspension of his/her license.

M. D. Dukes, Manager
Environmental Support Section
Environmental Protection Department

DATE: 2/16/93

Westinghouse
Savannah River Company

P. O. Box 616
Aiken, SC 29802

Environmental Quality Control Office
Lower Savannah District
218 Beaufort Street, N. E.
Aiken, South Carolina 29801

Wastewater Treatment Facility

PERMIT NO. #17,424 - IW
PLANT SRS F-Area Tank Farm
OWNER U. S. Department Of Energy
COUNTY Aiken, SC

The operator-in-charge of the above described plant will be J. E. Murdaugh who holds a valid A-Level Physical/Chemical (#1014) treatment certification issued by the South Carolina Environmental Certification Board.

The plant will be operated in compliance with all State of South Carolina rules and regulations for Wastewater Treatment Facilities, and with all other operating and NPDES permit conditions.

In case of an emergency during non-working hours, J. E. Murdaugh may be reached at the following location:

ADDRESS	PHONE
157 Rolling Rock Road, Aiken, SC 29803	(803) 648-8925

Should the operator in charge of this plant change for any reason, Westinghouse Savannah River Company will notify the Lower Savannah District Environmental Quality Control Office and the Board of Certification in writing. This individual has been informed that failure to properly carry out his/her duties as operator will result in the Environmental Quality Control Office requesting appropriate action by the South Carolina Environmental Certification Board, which could result in the revocation or suspension of his/her license.

M. D. Dukes, Manager
Environmental Support Section
Environmental Protection Department

DATE: 2/18/93

EPD-FSS
FIELD VISIT REPORT

(REV. 0, 6/10/91)

DISTRIBUTION:
LORI S. COWARD, 703-18A
Permit File #W-0517
W. D. Dunaway, 703-18A
M. D. Dukes, 742-A
C. R. Dynarski, 742-A
M. A. Hunter, 742-6G
J. L. Keyes, 742-A
W. J. Maloney, 742-A
J. V. Odum, 742-A
W. L. Payne, 742-A
C. B. Stevens, 742-6G
K. S. Wierzbicki, 742-6G

C R Hayes

EPD REPRESENTATIVE	SECTION (FSS or FSG)	DATE	TIME STARTED	TIME ENDED	TOTAL TIME IN HRS
C. R. Hayes / W. L. Payne	PFSG / ESS	2/12/93	9:30 AM	3:30 PM	6.0

FIELD CONTACT NAME (Location, Phone #)
M. A. Hunter, 742-6G, 7-0520

FIELD CONTACT DEPT
WM-RC

OTHER PARTICIPANTS(Name, Department, Location, Phone #)
D. M. Blue, 742-6G, 7-0520

LOCATION
H-Tank Farm, In-Tank Precipitation Facility, New Waste Transfer Facility, Auxiliary Pump Pit

PURPOSE OF VISIT
Perform pre-final inspection of facilities listed above (Construction Permit #17424-IW)

FIELD VISIT SUMMARY

The following facilities / systems were visited:

H-TANK FARM:
- Tanks 9-16, 21-24, 29-32, 35-43, 48-51
- Evaporators 242-H (including waste transfer system) and 242-16H
- Diversion boxes HDB1 - HDB8
- Pump Pits HPP1 - HPP10
- Stormwater monitoring system
- Control Rooms
- Associated cooling, containment and filter systems

IN-TANK PRECIPITATION FACILITY (ITP)
- Crossflow filters
- Stripper Columns
- Hold Tanks
- Cold Feed Area
- Control Room

NEW WASTE TRANSFER FACILITY (NWTF)

AUXILIARY PUMP PIT

All operating, maintenance and emergency procedures are in place.
Physically, all appeared satisfactory.
Logbooks need to be delivered to the control rooms.

EPD needs the following paperwork:
- "As-Built" Drawings
- O-I-C Designation Forms
- PE Certification Letters for ITP and NWTF

ACTION REQUIRED? (YES OR NO) Yes

IF YES DESCRIBE:

WMRC to provide the necessary items identified above to EPD. EPD to subsequently schedule SCDHEC for a final inspection.

HIGHLIGHTED ITEM? (YES OR NO) No

2

EPD-FSS
FIELD VISIT REPORT

(REV. 0, 6/10/91)

DISTRIBUTION:
LORI S. COWARD, 703-18A
Permit File #W-0517
W. D. Dunaway, 703-18A
M. D. Dukes, 742-A
C. R. Dynarski, 742-A
M. A. Hunter, 742-6G
J. L. Keyes, 742-A
W. J. Maloney, 742-A
J. V. Odum, 742-A
W. L. Payne, 742-A
C. B. Stevens, 742-6G
K. S. Wierzbicki, 742-6G

EPD REPRESENTATIVE	SECTION (FSS or FSG)	DATE	TIME STARTED	TIME ENDED	TOTAL TIME IN HRS
C. R. Hayes	PFSG	2/16/93	1:30 PM	3:30 PM	2.0

FIELD CONTACT NAME (Location, Phone #): D. M. Blue, 742-6G, 7-0520

FIELD CONTACT DEPT: WM-RC

OTHER PARTICIPANTS(Name, Department, Location, Phone #):

LOCATION: F-Tank Farm

PURPOSE OF VISIT: Perform pre-final inspection of facilities listed above (Construction Permit #17424-IW)

FIELD VISIT SUMMARY

The following facilities / systems were visited in F-Tank Farm:

- Tanks 1-8, 17-20, 25-28, 33-34, 44-47
- Evaporators 242-F (including waste transfer system) and 242-16F
- Diversion boxes FDB1 - FDB6
- Pump Pits FPP1 - HPP3
- Control Room
- Associated cooling, containment and filter systems

All operating, maintenance and emergency procedures are in place.
Physically, all appeared satisfactory.
Logbooks need to be delivered to the control room.

EPD needs the following paperwork:

- "As-Built" Drawings
- O-I-C Designation Forms
- PE Certification Letters for ITP and NWTF

ACTION REQUIRED? (YES OR NO) Yes

IF YES DESCRIBE:

WMRC to provide the necessary items identified above to EPD. EPD to subsequently schedule SCDHEC for a final inspection.

HIGHLIGHTED ITEM? (YES OR NO) No

OSR 3-4A-W (Rev 1-89)

WESTINGHOUSE SAVANNAH RIVER COMPANY

INTER-OFFICE MEMORANDUM

WER-HLE-930565

February 11, 1993

To: C. R. Hayes, 703-18A
W. L. Payne, 742-A

From: M. A. Hunter, 742-6G MAH

Use of the Contingency Plan and the Emergency Preparedness Plan

Under the Resource Conservation and Recovery Act (RCRA) regulations, treatment, storage and disposal facilities are required to maintain a Contingency Plan for emergency situations. In the past, the Contingency Plan has been maintained in a rigid format which met the requirements in 40 CFR 265, Subpart D. However, a comprehensive Emergency Preparedness Plan has also been develop which incorporates facets of the Contingency Plan as well as a hazard assessments and emergency preparedness criteria. The plan has been incorporated into Waste Management procedures for implementation at the Tank Farm and In-Tank Precipitation Facility. With the permitting of these facilities as an Industrial Wastewater Treatment facilities, they will no longer be governed by RCRA regulation. Therefore, with the withdrawl of the Tank Farms from the RCRA Part A application, the RCRA Contingency Plan will not longer be required. The Emergency Preparedness Plan will replace the Contingency Plan and fulfill the requirements of the Special Condition #9 of the Tank Farm Wastewater Permit (#17,424).

Upon your concurrence, Waste Management Regulatory Compliance will delete the F/H-Area Tank Farm Contingency Plan. Please provide written concurrence by February 18, 1993.

CC: F. R. Cadek, 719-4A
G. T. Wright, 241-120H
S. S. Cathey, 703-H
R. M. Satterfield, 719-4A
T. M. Monahon, 703-H
R. W. Wilson, 703-H
J. V. Odum, 742-A
W. D. Dunaway, 703-18A
M. D. Dukes, 742-A
M. E. Johnson, 742-A
K. S. Wierzbicki, 742-6G
B. L. Lewis, 703-H
M. S. Peters, 703-F
W. A. Wilson, 703-H
R. K. Roosa, 241-120H
K. F. Lesko, 703-H
G. Davis, 703-F
W. A. Morrison, 241-100F
E. R. Ennis, 241-120H
C. G. Lampley, 241-120H
C. Hyder, 703-13C
C. B. Stevens, 742-6G
T. P. Gauaghan, 241-152H
M. B. Birk, 724-7E
S. M. Mertz, 724-9E
D. M. Blue, 742-6G
HLWE Fileroom, 703-H
Filecode: 175.15

INTER-OFFICE MEMORANDUM
Savannah River Site

Date: 11-Feb-1993 03:31pm EST
From: Matthew A. Hunter
HUNTER-MA-L2335 AT A1 AT SASRS2
Dept: WMRC
Tel No: 557-0520/bp#6761

TO: See Below

Subject: Update on TFWWP and FFA Action Items - 2/11/93

The following is a revised listing of the actions associated with preparation/compliance with the Tank Farm Wastewater Permit (TFWWP) and the Federal Facility Agreement (FFA). This list includes responsible parties and target completion dates for each actions. The list will be updated on a weekly basis and will include a status line where applicable. The listing is broken down in to essential items that require resolution prior to the issuance the operating permit and non-essential items that may be resolved after the permit is issued. Items that have been completed will be carry over one time and then will be deleted.

Wastewater Permit (Essential)

1. Ensure WMO is capable of meeting requirements for Operators-On-Duty.
Responsible party: WMO/WMRC (WAW/MAH)
Completion Date: 2/18
Status: WMRC is working with EPD to resolve potential problems.

2.a Issue Memo to File documenting that the WMO and WMM procedure files will be used as the O&M Manual for the tank farms.
Responsible party: WMRC (MAH & DMB)
Completion Date: 2/12
Status: Draft has been completed and will be approved for issuance.

2.b Receive concurrence on use of WMO procedures as O&M Manual.
Responsible party: EPD (CRH & WLP)
Completion Date: 2/18

3.a Recommend content for OIC Logbook entries.
Responsible party: WMO (KFL)
Completion Date: Complete

3.b Finalize OIC Logbook Format.
Responsible party: WMRC (MAH)
Completion Date: 2/12
Status: Facilities have agreed on format Guidance for logbook entries is being prepared.

3.c Have OIC Logbook bound.
Responsible party: WMRC (DMB)
Completion Date: 2/16
Status: Contact has been made with the print shop and will have one day

turn around.

4. Issue completed OIC Designation Form.
Responsible party: WMRC (MAH)
Completion Date: 2/12
Status: Form does not require modification or designation of AOICs. Does ask for home address and phone number (still needs to be provided).

5. Review Best Management Practice plan to ensure DOE is in concurrence. (Condition 3)
Responsible party: WMRC (DMB)
Completion Date: 2/12
Status: Awaiting completion of DOE review.

6.a Draft memo for withdrawal of Tank Farms from RCRA Part A application. (Condition 10)
Responsible party: WMRC (DMB)
Completion Date: Complete

6.b Issue approved memo for withdrawal of Tank Farms from RCRA Part A application. (Condion 10)
Responsible party: WMRC (DMB)
Completion Date: 2/16

7.a Obtain services of Professional Engineer to stamp prints requested by DHEC.
Responsible party: WMRC (MAH & CBS)
Completion Date: 2/16
Status: Purchasing (Al Scott) anticipates contract approval on 2/12.

7.b Certify requested prints.
Responsible party: Rich Stegen (PE, Parson/C. T. Main)
Completion Date: Dependent on Purchasing
Status: Also pursuing Design Engineering certifying prints.

8.a Invite EPD for Pre-Final Inspection.
Responsible party: WMRC (MAH)
Completion Date: 2/12
Status: EPD has been scheduled for 9:30

8.b Invite DHEC for Final Inspection.
Responsible party: EPD
Completion Date: 2/18
Status: Following Pre-Inspection, EPD will if WM is ready.

9. PE certification for ITP, NWTF & H/S IAL for final inspection.
Responsible party: ITP: Complete, NWTF & H/S IAL: (Gupta/MAH)
Completion Date: 2/16

10. Route QA/QC Package (ITP Liner) for Approval.
Responsible party: WMRC (MAH)
Completion Date: 2/16

Status: ITP to provide cover memo which describes package.

11.a Write Memo to File on use of Emergency Preparedness Plan as Contingency Plan/Emergency Procedures. (Condition 9)
Responsible party: WMRC (MAH & DMB)
Completion Date: Complete

11.b Receive concurrence on use of Emergency Preparedness Plan.
Responsible party: EPD (CRH & WLP)
Completion Date: 2/18

12. Issue package and meet with OICs on responsibilities.
Responsiblie party: WMRC (DMB)
Completion Date: 2/16
Status: Package has been compiled and is in final stages of approval. FM's to set up meeting

13. Determine RCRA training requirements after issuance of TFWWP.
Responsible party: WMRC (DMB)
Completion Date: 2/19

Wastewater Permit (Non-Essential)

1.a Propose revisions to WM Tech Review to ensure that all modifications that will effect the description in the wastewater permit application or will change the integrity description in the tank assessment will be recognized and caught. (This will trigger any required PE certifications per the FFA.)
Responsible party: WMRC (MAH & MJH)
Completion Date: Complete

1.b Track procedure to ensure of implementation.
Responsible party: WMRC
Completion Date: Issuance of revision

1.c Brief HLWE Engineers on upcoming revision before issuance.
Responsible party: WMRC
Completion Date: 2/26

1.d Train HLWE Engineers on new WM Tech Review procedures.
Responsible party: WMRC
Completion Date: Once revised procedure is issued.

2. Propose pathforward for matrix for usable chemicals in the tank farms that will not alter the composition of the ETF effluent.
Responsible party: WMRC & HLWE (AWW, MAH, KNU & DMB)
Completion Date: 3/12
Status: HLWE has begun work and WMRC will review for adequate for tank farm application.

3. Package all changes to application for transmittal to DHEC (including 2F)
Responsible party: WMRC/HLWE(DMB & JEG)
Completion Date: 2/16

4. Issue guidance for how to make modification to wastewater permit.
Responsible party: WMRC (MAH & DMB)

Completion Date: 3/2

5. Review RHLWE schedule w/ DOE to confirm an approved schedule for submittal to DHEC.
Responsible party: WMRC
Completion Date: 2/26

6.a Submit to KFL proposed modification to Waste Transfer Procedure (241-FH-7TQ) to prohibit additions to tanks that have leaked.
Responsible party: WMRC
Completion Date: Complete

6.b Track to ensure that procedure is implemented.
Responsible party: WMRC
Completion Date: Implementation of procedure.

Federal Facility Agreement

1.a Meet with Gary Abel to discuss services of a Professional Engineer for certification of modifications to secondary containment.
Responsible party: WMRC (MAH & CBS)
Completion Date: Complete
Status: Dave Buchanan (DE) has agreed to take responsibility for this.

1.b Meet with Dave Buchanan and DE to discuss responsibilities and logistics for certifications.
Responsible party: WMRC/HLWE (CBS)
Completion Date: 2/19

2.a Review WM Response to Leaks procedure for adequacy.
Responsible party: WMRC/WMO/HLWE
Completion Date: Pending WMRP/EPD Meeting

2.b Propose revisions to leak procedures to ensure compliance.
Responsible party: WMRC
Completion Date: Pending WMRP/EPD Meeting

3.a Develop Logic Diagram for the responses for leaks.
Responsible party: WMRC (DMB & RSM)
Completion Date: 2/15
Status: Subcontractor is underway. Requires additional scenarios for evaluation.

3.b Set up meeting with HLWE and Subcontractor for input to Logic Diagram.
Responsible party: WMRC (MAH)
Completion Date: 2/26

4. Review WM SIRIM procedures and recommend any revisions required.
Responsible party: WMRC (MAH & MJH)
Completion Date: 2/19

5. Submit Waste Removal Schedule to DHEC.
Responsible party: HWLE (MJM)
Completion Date: 90 Days from effecive date of FFA

6. Identify and map all known spill sites with annual updates (first draft).
Responsible party: WMRC (EBD)

Completion Date: 3/28

Distribution:

TO:	CARY B. STEVENS	(STEVENS-CB-O5981 AT A1 AT SASRS2)
CC:	Ginny Ellis	(ELLIS-VE-W0928 AT A1 AT SASRS2)
CC:	WALTER A. WILSON	(WILSON-WA-O5215 @A1@SLSRP1)
CC:	Robert W. Wilson	(WILSON-RW-T4847 AT A1 AT SASRS2)
CC:	Arthur W. Wiggins, Jr.	(WIGGINS-AW-O6172 AT A1 AT SASRS2)
CC:	Kim S. Wierzbicki	(WIERZBICKI-KS-O6535 AT A1 AT SASRS2)
CC:	Bill Van Pelt	(VANPELT-WB-O7016 AT A1 AT SASRS2)
CC:	Kester Uzochukwu	(UZOCHUKWU-K-L1224 AT A1 AT SASRS2)
CC:	L.C. Thomas	(THOMAS-LC-O5194 AT A1 AT SASRS2)
CC:	Gerry F. Stejskal	(STEJSKAL-GF-Y6594 @A1@SLSRP1)
CC:	Joette G. Sonnenberg	(SONNENBERG-JG-O5770 AT A1 AT SASRS2)
CC:	Richard C. Shank	(SHANK-RC-Z8546 @A1@SLSRP1)
CC:	Rod M. Satterfield	(SATTERFIELD-RM-T3212 @A1@SLSRP1)
CC:	Roger K. Roosa	(ROOSA-RK-L4532 AT A1 AT SASRS2)
CC:	Luke T. Reid	(REID-LT-O8559 @A1@SLSRP1)
CC:	Carol A. Polson	(POLSON-CA-O5752 AT A1 AT SASRS2)
CC:	Mark S. Peters	(PETERS-MS-O5010 AT A1 AT SASRS2)
CC:	Bill Payne	(PAYNE-WL-Y7708 @A1@SLSRP1)
CC:	David T. O'Rear	(OREAR-DT-O4792 AT A1 AT SASRS2)
CC:	Robert S. Murphy	(MURPHY-RS-B9654 AT A1 AT SASRS2)
CC:	TOM MONAHON	(MONAHON-TM-O4411 @A1@SRXSS2)
CC:	Steven M. Mertz	(MERTZ-SM-A9202 AT A1 AT SASRS2)
CC:	Mark J. Mahoney	(MAHONEY-MJ-O5457 AT A1 AT SASRS2)
CC:	Brenda L. Lewis	(LEWIS-BL-O6503 AT A1 AT SASRS2)
CC:	Karen F. Lesko	(LESKO-KF-O7041 AT A1 AT SASRS2)
CC:	Charles G. Lampley 7-8550	(LAMPLEY-CG-O6174 AT A1 AT SASRS2)
CC:	Chuck Hayes	(HAYES-CR-Z9722 @A1@SLSRP1)
CC:	Michael J. Hagenbarth	(HAGENBARTH-MJ-L2326 AT A1 AT SASRS2)
CC:	Johnna E. Griffiths	(GRIFFITHS-JE-Y5542 AT A1 AT SASRS2)
CC:	Arthur S. Greer	(GREER-AS-Y6907 AT A1 AT SASRS2)
CC:	Arthur S. Greer	(GREER-AS-Y6907 AT A1 AT SASRS2)
CC:	TIMOTHY P. GAUGHAN	(GAUGHAN-TP-O8815 AT A1 AT SASRS2)
CC:	W. DANNY DUNAWAY	(DUNAWAY-WD-O7436 @A1@SLSRP1)
CC:	V.G. Dickert	(DICKERT-VG-O4857 AT A1 AT SASRS2)
CC:	Elizabeth B. DeWitt	(DEWITT-EB-L2262 AT A1 AT SASRS2)
CC:	Garry Davis	(DAVIS-G-O4089 @A1@SRXSS2)
CC:	John W. Cook	(COOK-JW-O9823 @A1@SLSRP1)
CC:	Joseph V. Cioffi	(CIOFFI-JV-B4664 @A1@SLSRP1)
CC:	Mario A. Ceravolo, 703-H	(CERAVOLO-MA-O7495 AT A1 AT SASRS2)
CC:	Dot Matthews	(MATTHEWS-DL-W0643 AT A1 AT SASRS2)
CC:	Thomas B. Caldwell	(CALDWELL-TB-Y6683 AT A1 AT SASRS2)
CC:	Frederick F. Cadek	(CADEK-FF-Y5022 @A1@SLSRP1)
CC:	W. Brent Boore	(BOORE-WB-O6688 AT A1 AT SASRS2)
CC:	Douglas M. Blue	(BLUE-DM-L4808 @A1@SRXSS2)
CC:	Cynthia Blair-McManus	(BLAIR_MCMANUS-C-B8534 @A1@SASRS3)
CC:	Marcia B. Birk	(BIRK-MB-Y9793 AT A1 AT SASRS2)
CC:	D T BIGNELL	(BIGNELL-DT-O5579 @A1@SLSRP1)
CC:	Chris J. Baker	(BAKER-CJ-B4996 @A1@SRXSS2)
CC:	Carrie A. Amacher	(AMACHER-CA-C9103 @A1@SLSRP1)

INTER-OFFICE MEMORANDUM
Savannah River Site

Date: 05-Feb-1993 01:35pm EST
From: Matthew A. Hunter
HUNTER-MA-L2335 AT A1 AT SASRS2
Dept: WMRC
Tel No: 557-0520/bp#6761

TO: Chuck Hayes (HAYES-CR-Z9722 @A1@SLSRP1)

CC: W. DANNY DUNAWAY (DUNAWAY-WD-O7436 @A1@SLSRP1)
CC: Douglas M. Blue (BLUE-DM-L4808 @A1@SRXSS2)
CC: CARY B. STEVENS (STEVENS-CB-O5981 AT A1 AT SASRS2)

Subject: PE Certifications

Chuck,

Rich Stegen will be certifying the 10 prints. He is scheduled for completion on 2/22, but we are pushing to have them done earlier.

INTER-OFFICE MEMORANDUM
Savannah River Site

Date: 04-Feb-1993 06:46pm EST
From: Matthew A. Hunter
HUNTER-MA-L2335 AT A1 AT SASRS2
Dept: WMRC
Tel No: 557-0520/bp#6761

TO: See Below

Subject: Update of Action Items for TFWWP/FFA - 2/4/93

The following is a revised listing of the actions associated with preparation/compliance with the Tank Farm Wastewater Permit (TFWWP) and the Federal Facility Agreement (FFA). This list includes responsible parties and target completion dates for each actions. The list will be updated on a weekly basis and will include a status line where applicable. The listing is broken down in to essential items that require resolution prior to the issuance the operating permit and non-essential items that may be resolved after the permit is issued. Items that have been completed will be carry over one time and then will be deleted.

Wastewater Permit (Essential)

1. Ensure WMO is capable of meeting stipulations for Operators-In-Charge.
Responsible party: WMO/WMRC (WAW/MAH)
Completion Date: 2/8
Status: WMRC is pursuing with WMO.

2.a Issue guidance on contents of Operation and Maintenance manual and Operator in Charge Logbook. (Condition 1)
Responsible party: WMRC (MAH)
Completion Date: Complete

2.b Write Memo to File documenting that the WMO and WMM procedure files will be used as the O&M Manual for the tank farms.
Responsible party: WMRC (MAH & DMB)
Completion Date: 2/19

2.c Recommend content for OIC Logbook entries.
Responsible party: WMO (KFL)
Completion Date: 2/12

2.d Have OIC Logbook bound by printing.
Responsible party: WMRC (DMB)
Completion Date: 2/16

2.e Issue completed OIC Designation Form.
Responsible party: WMRC (WAW)
Completion Date: 2/12

3. Review Best Management Practice plan to ensure DOE is in concurrence. (Condition 3)
Responsible party: WMRC (DMB)
Completion Date: 2/10

4. Draft memo for withdrawal of Tank Farms from RCRA Part A application. (Condition 10)
Responsible party: WMRC (DMB)
Completion Date: 2/10

5. Ensure that wastewater records can be retained off-site and that retreival will be sufficient to meet regulator's requirements. (Condition 2)
Responsible party: WMRC (DMB)
Completion Date: Complete

6.a Obtain services of Professional Engineer to stamp prints requested by DHEC.
Responsible party: WMRC (MAH & CBS)
Completion Date: 2/9
Status: Focus Group in progress of walking through to purcusing. Al Scott, Purchasing Manager, on board as urgency and short turnaround time.

6.b Certify requested prints.
Responsible party: Rich Stegen (PE, Parson/C. T. Main)
Completion Date: 2/22

7.a Invite EPD for Pre-Final Inspection.
Responsible party: WMRC (MAH)
Completion Date: 2/16
Comment: EPD has requested to be scheduled at least one week before DHEC is invited, to resolve any descrepencies internally before they will invite DHEC for the final inspection.

7.b Invite DHEC for Final Inspection.
Responsible party: EPD
Completion Date: 2/18

8. PE certification for ITP, NWTF & H/S IAL for final inspection.
Responsible party: ITP: Complete, NWTF & H/S IAL: (Gupta/MAH)
Completion Date: 2/22

9.a Prepare QA/QC package for ITP liner extension.(Condition 8)
Responsible party: WMRC (DMB & TPG)
Completion Date: Complete
Status: Package has been prepared, requires routing for approval.

9.b Route Package for Approval.
Responsible party: WMRC (MAH)
Completion Date: 2/19

10. Write Memo to File on use of Emergency Preparedness Plan as Contingency Plan/Emergency Procedures. (Condition 9)
Responsible party: WMRC (MAH)
Completion Date: 2/15

Wastewater Permit (Non-Essential)

1.a Propose revisions to WM Tech Review to ensure that all modifications that will effect the description in the wastewater permit application or will change the integrity description in the tank assessment will be

recognized and caught. (This will trigger any required PE certifications per the FFA.)
Responsible party: WMRC (MAH & MJH)
Completion Date: 2/26

1.b Train HLWE Engineers on new WM Tech Review procedures.
Responsible party: WMRC
Completion Date: Once revised procedure is issued.

2. Propose pathforward for matrix for usable chemicals in the tank farms that will not alter the composition of the ETF effluent. (Condition 4)
Responsible party: WMRC & HLWE (AWW, MAH, KNU & DMB)
Completion Date: 3/12

3. Package all changes to application for transmittal to DHEC (including 2F)
Responsible party: WMRC/HLWE(DMB & JEG)
Completion Date: 2/19

4. Issue guidance for how to make modification to wastewater permit.
Responsible party: WMRC (MAH & DMB)
Completion Date: 3/2

5. Review RHLWE schedule w/ DOE to confirm an approved schedule for submittal to DHEC.
Responsible party: WMRC
Completion Date: 2/26

6. Submit to KFL proposed modification to Waste Transfer Procedure (241-FH-7TQ) to prohibit additions to tanks that have leaked.
Responsible party: WMRC
Completion Date: 2/9

Federal Facility Agreement

1. Meet with Gary Abel to discuss services of a Professional Engineer for certification of modifications to secondary containment.
Responsible party: WMRC (MAH & CBS)
Completion Date: 2/10

2.a Review WM Response to Leaks procedure for adequacy.
Responsible party: WMRC/WMO/HLWE
Completion Date: Pending WMRP/EPD Meeting

2.b Propose revisions to leak procedures to ensure compliance.
Responsible party: WMRC
Completion Date: Pending WMRP/EPD Meeting

3. Develop Logic Diagram for the responses for leaks.
Responsible party: WMRC (DMB & RSM)
Completion Date: 2/15

4. Review WM SIRIM procedures and recommend any revisions required.
Responsible party: WMRC (MAH & MJH)
Completion Date: 2/19

5. Submit Waste Removal Schedule to DHEC.
Responsible party: HWLE (MJM)
Completion Date: 90 Days from effecive date of FFA

4

6. Identify and map all known spill sites with annual updates (first draft).
Responsible party: WMRC (EBD)
Completion Date: 3/28

Distribution:

TO:	CARY B. STEVENS	(STEVENS-CB-O5981 AT A1 AT SASRS2)
CC:	Elizabeth B. DeWitt	(DEWITT-EB-L2262 AT A1 AT SASRS2)
CC:	Mark J. Mahoney	(MAHONEY-MJ-O5457 AT A1 AT SASRS2)
CC:	Marcia B. Birk	(BIRK-MB-Y9793 AT A1 AT SASRS2)
CC:	Steven M. Mertz	(MERTZ-SM-A9202 AT A1 AT SASRS2)
CC:	Douglas M. Blue	(BLUE-DM-L4808 @A1@SRXSS2)
CC:	Robert S. Murphy	(MURPHY-RS-B9654 AT A1 AT SASRS2)
CC:	Michael J. Hagenbarth	(HAGENBARTH-MJ-L2326 AT A1 AT SASRS2)
CC:	Kester Uzochukwu	(UZOCHUKWU-K-L1224 AT A1 AT SASRS2)
CC:	Johnna E. Griffiths	(GRIFFITHS-JE-Y5542 AT A1 AT SASRS2)
CC:	Gerry F. Stejskal	(STEJSKAL-GF-Y6594 @A1@SLSRP1)
CC:	Chuck Hayes	(HAYES-CR-Z9722 @A1@SLSRP1)
CC:	Carrie A. Amacher	(AMACHER-CA-C9103 @A1@SLSRP1)
CC:	W. DANNY DUNAWAY	(DUNAWAY-WD-O7436 @A1@SLSRP1)
CC:	John W. Cook	(COOK-JW-O9823 @A1@SLSRP1)
CC:	Luke T. Reid	(REID-LT-O8559 @A1@SLSRP1)
CC:	Joette G. Sonnenberg	(SONNENBERG-JG-O5770 AT A1 AT SASRS2)
CC:	L.C. Thomas	(THOMAS-LC-O5194 AT A1 AT SASRS2)
CC:	Richard C. Shank	(SHANK-RC-Z8546 @A1@SLSRP1)
CC:	WALTER A. WILSON	(WILSON-WA-O5215 @A1@SLSRP1)
CC:	Thomas B. Caldwell	(CALDWELL-TB-Y6683 AT A1 AT SASRS2)
CC:	Mario A. Ceravolo, 703-H	(CERAVOLO-MA-O7495 AT A1 AT SASRS2)
CC:	Arthur W. Wiggins, Jr.	(WIGGINS-AW-O6172 AT A1 AT SASRS2)
CC:	Kim S. Wierzbicki	(WIERZBICKI-KS-O6535 AT A1 AT SASRS2)
CC:	Mark S. Peters	(PETERS-MS-O5010 AT A1 AT SASRS2)
CC:	Brenda L. Lewis	(LEWIS-BL-O6503 AT A1 AT SASRS2)
CC:	Arthur S. Greer	(GREER-AS-Y6907 AT A1 AT SASRS2)
CC:	Chris J. Baker	(BAKER-CJ-B4996 @A1@SRXSS2)
CC:	V.G. Dickert	(DICKERT-VG-O4857 AT A1 AT SASRS2)
CC:	Robert W. Wilson	(WILSON-RW-T4847 AT A1 AT SASRS2)
CC:	Roger K. Roosa	(ROOSA-RK-L4532 AT A1 AT SASRS2)
CC:	TOM MONAHON	(MONAHON-TM-O4411 @A1@SRXSS2)
CC:	W. Brent Boore	(BOORE-WB-O6688 AT A1 AT SASRS2)
CC:	Rod M. Satterfield	(SATTERFIELD-RM-T3212 @A1@SLSRP1)
CC:	Joseph V. Cioffi	(CIOFFI-JV-B4664 @A1@SLSRP1)
CC:	Dot Matthews	(MATTHEWS-DL-W0643 AT A1 AT SASRS2)
CC:	Ginny Ellis	(ELLIS-VE-W0928 AT A1 AT SASRS2)
C:	Frederick F. Cadek	(CADEK-FF-Y5022 @A1@SLSRP1)

FAX: Bob Campbell
* Per our telephone Conv.
* Chuck Hayes (EPD) attended Monday 2/1/93 Conf. Call.

JER 2/2/93

INTER-OFFICE MEMORANDUM
Savannah River Site

Date: 29-Jan-1993 15:43 EST
From: James E. Bolen
Dept:
Tel No

OPTIONAL FORM 99 (7-90)
FAX TRANSMITTAL # of pages ▶ 2

To Bob Campbell	From Jack Roberts
Dept./Agency	Phone # 5-1728
Fax # 5-4943	Fax # 5-4676

NSN 7540-01-317-7368 5099-101 GENERAL SERVICES ADMINISTRATION

TO: See Below

Subject: 1-H HLW Evaporator

Briefly presented below is a synopsis of the phone calls occuring between myself and SCDHEC on 29 Jan 93 regarding the subject issue:

9:30 A.M. Bolen to Larry Arrington (SCDHEC- Cola) Told Larry about our desire to re-start the 1-H evaporator describing its regulatory restrictions. Larry stated that equipment may be operated (generic) with only a waste water construction permit, provided the local (Aiken) DHEC Office is made aware and given a chance to inspect/authorize. He stated wastewater equipment has been operated before without having an operating permit in this manner. he directed me to call Jeff Chapman at the local office (Aiken).

10:20 A.M. Bolen to Chapman (SCDHEC-Aiken, Wastewater). Explained our position to Chapman. He understood and requested some time to discuss the proposal with James Burckhalter (sp?) who handles RCRA Permitting issues. Burckhalter called me back within an hour.

12:00 Noon Burckhalter(SCDHEC) to Bolen. I was told by James that no one really had a problem with re-start, and that he thought it could be done. He said he would include David Wilson and Shelley Sherritt of the RCRA Section (Cola Office) in the discussions. He arranged for either or both of them to call me by 1:30 P.M.

1:30 P.M. Sherritt (SCDHEC) to Bolen. Shelley understood our request and stated she thought restart was appropriate as long as we were not increasing our capacity to store waste. She indicated that repairs which can be regarded as "routine" are generally allowable provided the regulated's capacity and/or intention to store waste does not increase. We did not dwell on the issue of restart while under interim status, however we did arrange for the conference call.

Location: NEPA Workroom
Time: 1:30 P.M.
Call-in#: 803-734-4711

Shelley had originally requested her supervisor be present (Randy Thompson). She learned later, however, that Randy could not be available at 1:30 and requested we re-schedule for 10:30. Since we determined this so late on Friday, I requested she maintain the 1:30 appointment with just she (from SCDHEC) and we (SRS) would reciprocate by limiting our participation in the call to four but no more than five callers. She agreed to accomodate us and indicated she may be able to pull Alan Coffey in at the last moment. I recommend we maintain our call-in staff to the following:

2

Charles Anderson - LWD (Director)
Bruce Lawrence - EPD and/or Chuck Hayes - EPD
Cindi Blair-McManus - LWD
Carroll McFall - LWD (If you feel the need or want to be present)
Jim Bolen - ECD

Thank You.

JEB

Distribution:

TO:	N. Carroll McFall	(MCFALL-NC-B7643 @A1@SASRS2)
TO:	Charles R. Hayes, Jr.	(HAYES-CR-W5445 @A1@SASRS2)
TO:	BRUCE LAWRENCE	(LAWRENCE-BM-O4037 @A1@SLSRP1)
TO:	J. V. ODUM	(ODUM-JV-O4184 @A1@SLSRP1)
TO:	Cynthia Blair-McManus	(BLAIR_MCMANUS-C-B8534 AT A1 AT SASRS3)
TO:	Ronald L. Peterson	(PETERSON-RL-B6679 AT A1 AT SASRS3)
TO:	James D. Arnett	(ARNETT-JD-B6773 AT A1 AT SASRS3)
TO:	Arthur B. Gould, Jr.	(GOULD-AB-S8306 AT A1 AT SASRS3)
TO:	Charles E. Anderson	(ANDERSON-CE-B7688 @A1@SASRS2)

* Dhec (RCRA People) said OK with them to run it. Might want to check w/ wastewater.
Charlie Anderson said wouldn't start till early march
Chuck sat in on the call

MARION HYDRO (CCC 3 & 4)

CONF CALL WITH DHEC

C. STEVENS
C. HAYES
C. ANDERSON
C. McFALL
C. B. McMANUS
P. PRATER
J. BOLEN

S. STEWART
A. COFFEY
(P) J. LINTON?

- WE ARE RETURNING IH TO SERVICE
- WE NEED FEEDBACK
- WE HAVE NO OBJECTIONS

SS

WILL CAPACITY BE EXCEEDED?

No

AC: THIS HAS DAVID'S BLESSING AS WELL
JUST CLEAR IT WITH WASTEWATER

BCC: C. J. Baker, 241-120H
R. Wolfe, 241-119H
R. M. Satterfield, 719-4A
J. S. Roberts, 742-A
K. S. Wierzbicki, 742-6G

Orig & cc — Danny Dunaway
Joe Adams
John Cook

Westinghouse
Savannah River Company

Norman C. Boyter
Vice President & General Manager
Waste Management & Environmental Restoration Division

P.O. Box 616
Aiken, SC 29802

January 19, 1993

WER-OVP-930006

RECEIVED
JAN 21 1992
ENVIRONMENTAL PROTECTION DEPT.
WESTINGHOUSE SAVANNAH RIVER CO.

Mr. L. C. Sjostrom, Assistant Manager
Environmental Restoration and Waste Management
Field Office, Savannah River
U. S. Department of Energy
P. O. Box A
Aiken, SC 29802

Dear Mr. Sjostrom:

WSRC POSITION ON RESTARTING 1H EVAPORATOR OPERATIONS

Ref: (1) N. C. Boyter to L. C. Sjostrom, 1H Evaporator - Request for Restart Authorization, February 21, 1992

(2) N. C. Boyter to L. C. Sjostrom, Restart of 1H Evaporator (U), May 15, 1992.

(3) J. E. Lytle to L. P. Duffy, Request for Approval to Restart the 242-H High-Level Waste Evaporator at the Savannah River Site, October 15, 1992

This letter provides a revised WSRC position on restarting the 1H Evaporator prior to obtaining a waste water operating permit. The references show a position that has gone from starting the 1H Evaporator before the Federal Facility Agreement (FFA) is signed, to re-evaluating and waiting for approval of the FFA or waste water operating permit to be signed. Based on recent legal counsel stemming from enforcement actions at Rocky Flats, our position on restarting the 1H Evaporator with an FFA has changed. Our current position is that there is no legal basis or protection from enforcement for operating the 1H Evaporator until the waste water operating permit is received. The signing of the FFA in its present language does not protect WSRC from potential enforcement actions.

Protection From Regulatory Enforcement Action

The FFA, as written, does not provide protection for WSRC from potential regulatory enforcement action including possible civil and criminal penalties. Since WSRC is not a party to the FFA agreement, the only possible coverage would have to be by extension from coverage afforded to DOE or by implication.

The FFA contains no expressed language that covers DOE in this regard, so there can be no coverage for WSRC by extension. Therefore, the issue of operating the 1H Evaporator with an FFA prior to obtaining a waste water operating permit comes down to the intent and desire of the parties to the agreement.

The FFA contains an agreement with SR's principal regulators, the Environmental Protection Agency (EPA) and the South Carolina Department of Health and Environmental Control (DHEC), which discusses the use of facilities not in compliance with secondary containment standards. While the intent of the FFA may have been to operate the 1H Evaporator, when DHEC staff was questioned by DOE in this regard, this intention was not shared by DHEC. We recognize, however, that there have been verbal assurances that SCDHEC did not object to SRS operating the evaporator.

Conclusion

The General Council's office has issued an opinion indicating that DHEC did not accept the position that startup of the 1H Evaporator was covered by the FFA, therefore we have no basis to start the 1H Evaporator without a waste water operating permit. Should DOE receive written clarification from the parties to the agreement that restart of the 1H Evaporator was part of the intended consequences of the agreement, WSRC would, of course, be willing to resume operation on that basis.

Very truly yours,

N C Boyter

Norman C. Boyter, Vice President and General Manager
Waste Management and Environmental Restoration Division

RGW:gb

cc: A. L. Watkins, DOE, 703-A
A. L. Schwallie, WSRC, 703-A
J. J. Buggy, WSRC, 703-A
S. S. Cathey, WSRC, 703-H
C. E. Anderson, DOE, 703-H
F. F. Cadek, WSRC, 719-4A
W. B. Boore, WSRC, 719-4A
R. R. Campbell, WSRC, 703-A
G. T. Wright, WSRC, 703-H
W. G. Collins, WSRC, 719-4A
C. L. Peckinpaugh, WSRC, 719-4A
C. B. Jones, WSRC, 719-4A
J. G. Wise, WSRC, 703-A
J. F. Jackson, WSRC, 992-3W
T. S. Heenan, 703-A

W-0517

OSR 3-4A-W (Rev 1-89)

WESTINGHOUSE SAVANNAH RIVER COMPANY

INTER-OFFICE MEMORANDUM

WER-HLE-930257

February 2, 1993

To: S. Gupta, 966-W

From: M. A. Hunter, 742-6G

Completion of EWR #868084

On January 25, 1993, the F/H-Area Tank Farms received an Industrial Wastewater Construction Permit, #17,424-IW. In preparation for the Wastewater Permit to Operate, all prerequisites are being verified as to status. There are two outstanding Professional Engineer (PE) certifications required at the time of the final inspection. The certifications are to be provided through EWR #868084 (attached). It is requested that these certifications be forwarded to Chuck Hayes prior to February 22, 1993, using same distribution list. If there are any questions or problems, please contact me at 7-0520.

CC: K. S. Wierzbicki, 742-6G
W. S. Gray, 966-W, B14-58
[redacted]
C. B. Stevens, 742-6G
D. M. Blue, 742-6G

Date: 9/11/91

ENGINEERING WORK REQUEST

W068U0400

EWR NO. 868084 PART

2

EWR ORIGINATOR

Originator: J. A. Pike Funding Department: WMT Tracking No: W0240

Title: Wastewater Permiting Construction Certification for NWTF and H-S Inter-Area Transfer Line

Line Item Related (Y/N): N Line Item No: Proj. No:

EWR Category: [ ] PRE [ ] FDC [ ] SAF [ ] ESL [ ] CON [ ] EST [ ] STU [X] PER [ ] CDR [ ] DF [ ] SL [ ] ABD [ ] FAB [ ] CD

Scope of Work, Deliverables, and Required Schedules (Use Additional Page if Necessary):

Recently constructed facilities in the F and H Tank Farms require Professional Engineer certification to SCDHEC of as-built conditions prior to operation as specified in the Tank Farm Waste Water Permit Application and applicable state regulations. Bechtel Construction will conduct all necessary reviews of records (providing all personnel necessary to search and gather needed records) and provide the certification for the New Waste Transfer Facilities (HDB-8-241-100H) and the H-S Inter-Area Transfer Line including the auxilary and low point pump pits. Bechtel Construction has identified a Professional Engineer qualified to provide the certification.

Schedule: Work Start: 10/1/91 Work Complete: 12/31/91

Cost Estimate

FEB 13 1992

RECEIVED FINANCE DEPT.

	Manhours	Dollars
Design Engineering:		
Professional Engineer and Staff Assistance	208	$15,000
Travel and Living Expenses		6,000
Construction Engineering and Quality Control:		
Engineering & Quality Control Support Personnel	390	14,500
Construction Professional Engineer Coordination	40	1,500
Contingence for unexpect expenses		3,000
TOTALS:	638	40,000

EA

Reference: R. D. Kowalski to J. A. Pike, "Construction Certification Funding Requirements for F and H Areas High Level Radioactive Waste Tank Farms", Log No. CESM-91-0480, August 30, 1991.

SE OR DE MANAGER RESPONSIBLE FOR EWR

Period	Prior FY BO	Current FY BO 1	2	3	4	Total
$K	0	40	0	0	0	40

Period	NEXT FY BO 1	2	3	4	Total	Future FY BO
$K	0	0	0	0	0	0

TEC Dept	$K
DE	22
SE	
FSDC	
PM	
CONST	18
Total	40

Responsibility Code: 3140C Amt. Prev. Requested: 0.00

Work Begin Date: 10/1/91 Amt. Requested: 40000.00

Work Completion Date: 12/31/91 Total This Request: 40000.00

Est. Manhours: 638

Other Exp.: Travel

DE OR SE EWR COORDINATOR

Engineering Agency PMD

DEPT. EWR COORDINATOR

B & R: EW 301C Cost Code: 6610-91

SIGNATURE APPROVALS

DE/SE Manager (Date) 12/92

Media Proj. Mgr. (Date)

Sponsor Dept. Mgr. (Date)

Site EWR Coordinator (Date)

(Date)

3

H-Area Diversion Box #8

Prior to final approval, I will submit a statement certifying that construction is complete and in accordance with approved plans and specifications, to the best of my knowledge, information and belief. This certification will be based upon a final inspection for design compliance by me or a representative of this office who is under my supervision.

Signed: R. Kowalski 5/6/91 S.C. Registration No. 14077
Registered Professional Engineer

SOUTH CAROLINA REGISTERED PROFESSIONAL ENGINEER No. 14077 RICHARD D. KOWALSKI

I have reviewed the information (i.e., summary specifications, process descriptions, etc.) provided in the permit application for the H-Area Diversion Box #8. To the best of knowledge, information, and belief, the information provided accurately represents the design conditions. I have placed my signature and seal on this application form signifying that I accept responsibility for the design of the H-Area Diversion Box #8.

Signed: John William Nelson S.C. Registration No. 4448
Registered Professional Engineer

SOUTH CAROLINA REGISTERED PROFESSIONAL ENGINEER No. 4448 JOHN WILLIAM NELSON

H/S Interarea Transfer Line

Prior to final approval, I will submit a statement certifying that construction is complete and in accordance with approved plans and specifications, to the best of my knowledge, information and belief. This certification will be based upon a final inspection for design compliance by me or a representative of this office who is under my supervision.

Signed: R. Kowalski 5/6/91 S.C. Registration No. 14077
Registered Professional Engineer

SOUTH CAROLINA REGISTERED PROFESSIONAL ENGINEER No. 14077 RICHARD D. KOWALSKI

4

I have reviewed the information (i.e., summary specifications, process descriptions, etc.) provided in the permit application for the H/S Interarea Transfer Line. I have placed my signature and seal on this application form signifying that to the best of my knowledge, information, and belief, the information provided accurately represents the design conditions for the H/S Interarea Transfer Line.

Signed: John William Nelson S.C. Registration No. 4448
Registered Professional Engineer

SOUTH CAROLINA REGISTERED PROFESSIONAL ENGINEER No. 4448 JOHN WILLIAM NELSON

Replacement Evaporator System

I have reviewed the information (i.e., summary specifications, process descriptions, etc.) provided in the permit application for the Replacement Evaporator System. I have placed my signature and seal on this application form signifying that to the best of my knowledge, information, and belief, the information provided accurately represents the design for the Replacement Evaporator System.

Signed: [signature] S.C. Registration No. 10901
Registered Professional Engineer

SOUTH CAROLINA REGISTERED PROFESSIONAL ENGINEER No. 10901

Prior to final approval, I will submit a statement certifying that construction is complete and in accordance with approved plans and specifications, to the best of my knowledge, information and belief. This certification will be based upon a final inspection for design compliance by me or a representative of this office who is under my supervision.

Signed: R. Kowalski 5/6/91 S.C. Registration No. 14077
Registered Professional Engineer

SOUTH CAROLINA REGISTERED PROFESSIONAL ENGINEER No. 14077 RICHARD D. KOWALSKI

OSR 3-4A-W (Rev 1-89)

WESTINGHOUSE SAVANNAH RIVER COMPANY

INTER-OFFICE MEMORANDUM

WER-HLE-930255

January 29, 1993

To: S. S. Cathey, 703-H
H. M. Handfinger, 241-120H

From: K. S. Wierzbicki, 742-6G KSW

Guidance for the Preparation of the Operator-In-Charge Logbooks and O&M Manuals for the Industrial Wastewater Permit to Operate the F/H-Area Tank Farms (U)

Summary:

In order to prepare for the issuance of the Industrial Wastewater Operating Permit for the F/H-Area High Level Waste Tank Farms, two documents require preparation. An Operator's Logbook is required to be completed and signed by an Operator-In-Charge (OIC) on a daily basis. Also, it is recommended that a procedure be written to fulfill Special Condition #1 of the Wastewater Construction Permit, in order for the current Waste Management procedure files to be considered as an Operations and Maintenance Manual.

Discussion:

When permitting a facility as an Industrial Wastewater unit, the South Carolina Department of Health and Environmental Control (SCDHEC) issues a standardized permit that includes Special Conditions. These conditions are required to be met in order to operate as a wastewater facility. The Wastewater Permit to Operate the F/H-Area Tank Farms, once issued, will contain several special conditions. In preparation for its issuance, there are two additional documents that require preparation. These documents are:

- Operator-In-Charge Logbook
- Operations and Maintenance Manual

Operator-In-Charge Logbook

The requirement of an OIC Logbook has been implemented site-wide via the 3Q Manual, Procedure ECM 20.1. Section 5.3 of this procedure offers guidance for the preparation and use of the OIC Logbook. There are several criteria that the log must meet and are listed below:

- Logs shall be a bound book with sequentially numbered pages.
- Logs entries shall be legibly written in black waterproof ink.
- No "white-out" will be used on the log pages.
- Unnecessary notes or marks shall not be included in the log.
- Changes/Corrections must be signed and dated.
- Completed log books shall be stored (3 years) as required by Records Management Procedures, DOE Regulations, NPDES permit conditions and State Regulations.

A draft OIC Logbook page (Attachment 1) has been prepared to meet the minimum standards in the site procedure. Additional information may be added to the Log entries if desired. Also attached is an example of the OIC Logbook for the Z-Area Saltstone Facility (Attachment 2). The Environmentalt Protection Department has recommended that this be the standard that the Tank Farm OIC Logbook be based.

Operations and Maintenance Manual

The Special Conditions of the Wastewater Operating Permit for the F/H-Area Tank Farms specifically requires the maintenance of a complete Operations and Maintenance (O&M) Manual for each facility. Generally this manual should consist of procedures used in the operation and maintenance of the facility, as well as, "a general description of the treatment process(es), operating characteristics that will produce maximum treatment efficiency and corrective action to be taken should operating difficulties be encountered" (Special Condition #1, Wastewater Construction Permit for F/H Tank Farms). To maintain consistency across Waste Management facilities, Waste Management Regulatory Compliance (WMRC) recommends that a procedure be written by Operations that will supplement the existing procedure files. A similar procedure for the Effluent Treatment Facility (241-FH-ETF-175) is maintained on file in their procedure files. This additional procedure completes the O&M Manual for that facility. A copy of the procedure has been attached as an example (Attachment 3).

Conclusion:

The Operations and Maintenance Manuals and the Operator-In-Charge Logbooks are required in order to operate as an Industrial Wastewater Facility. These documents must be approved and in place prior to the issuance of a Permit to Operate for the F/H Tank Farms in order to start the facility in full compliance with both the site standards and South Carolina state law. WMRC is available to assist in the preparation of these documents. Please contact Matt Hunter or Douglas Blue at 7-0520 for assistance or further clarification.

MAH:mh

Att

BC
F115

WER-HLE-930255
S. S. Cathey
January 29, 1993

CC: R. M. Satterfield, 719-4A*
G. T. Wright, 241-120H*
W. B. Boore, 719-4A*
T. M. Monahon, 703-H*
R. W. Wilson, 703-H
G. Davis, 703-F
A. S. Greer, 241-102H
C. J. Baker, 241-120H*
E. R. Ennis, 241-120H
R. K. Roosa, 241-120H
W. A. Wilson, 703-H
K. F. Lesko, 703-H
W. A. Morrison, 241-100F
B. L. Lewis, 703-H*
K. S. Wierzbicki, 742-6G*
W. D. Dunaway, 703-18A*
C. R. Hayes, 703-18A
W. Payne, 742-A
C. B. Stevens, 742-6G
J. W. Smith, 703-5C
R. R. Salmon, 703-13C
M. S. Peters, 703-F*
G. D. Thaxton, 241-120H*
I. P. Amidon, 703-H
M. A. Hunter, 742-6G*
D. M. Blue, 742-6G*
HLWE Filecode: 175.1

* Without Attachments

ATTACHMENT 1

Operator-In-Charge Logbook

Page _____

Date: Time:

Inspection Performed by:_____ License Number: _____

Observation of Abnormal Results from Inspection:

_____

_____

_____

_____

_____

_____

_____

_____

DRAFT

Major maintenance, replacement or repair work during last 24 hours:

_____

_____

_____

_____

_____

_____

_____

_____

_____

_____

_____

License Number:_____ _____

Operator-In-Charge:
Signature

ATTACHMENT 2

Date: _____ Shift: _____ Page: 21

Z-AREA CENTRAL CONTROL ROOM OPERATORS LOG

INCOMING CONTROL ROOM PERSONNEL DOCUMENT REVIEW:

DOCUMENT REVIEWED	CR SUPVSR INITIALS	OPERATORS INITIALS		
Previous two shifts' operating logs	_____	____	____	____
		____	____	____
Z-Area status board	_____	____	____	____
		____	____	____

CONTROL ROOM OPERATORS ON DUTY:

	Time in	Signature	Time out	Signature
Lead Operator	____	_____	____	_____
	____	_____	____	_____
	____	_____	____	_____
	____	_____	____	_____
	____	_____	____	_____
	____	_____	____	_____
	____	_____	____	_____
Control Room Supervisor	____	_____	____	_____
	____	_____	____	_____
	____	_____	____	_____

Emergency Signal Test Completed? Yes No

FACILITY INSPECTION PERFORMED BY: _____ (SIGN & DATE)

LICENSE#: _____ TIME COMPLETED: _____

SYSTEM STATUS DURING INSPECTION	OPERATING	NOT OPERATING
DISCHARGES TO ENVIROMENT?	YES	NO
EQUIPMENT CONDITION UNSATISFACTORY?	YES	NO
ABNORMAL CONDITIONS? (If yes for any conditions, explain below)	YES	NO

_____

_____

2

Date:_____ Page: 22

INVENTORIES	Beginning of shift	End of shift
SSHT (gallons)	_____	_____
Premix (tons/ft.)	_____	_____
Slag (feet)	_____	_____
Admixture (gallons)	_____	_____
Flyash 1 (feet)	_____	_____
Flyash 2 (feet)	_____	_____
Cement (feet)	_____	_____
FWRT (gallons)	_____	_____
Process (gallons)	_____	_____
Domestic (gallons)	_____	_____
Fire Water (gallons)	_____	_____
Active Cell level (feet)	_____	_____
SSHT Temperature	_____	_____
Tank 50 (gallons)	_____	_____

PROCESSING DATA:

Vault & Cell being filled: Vault _____ Cell _____

Blend Weights: Cement_____lbs; Slag_____lbs; Flyash_____lbs.

Premix Ratio Percents: Cement_____%; Slag_____%; Flyash_____%

Water to Premix Ratio:	_____
Salt Solution Processed (gallons)	_____
Salt Solution used to flush (gallons)	_____
Saltstone Produced (lbs.)	_____
Flush Water Processed (gallons)	_____
Premix used (tons)	_____
Admixture used (gallons)	_____
Mixing & Transfer Operation (run hours)	_____
Transfer from Tank 50 (gallons)	_____

Date:_____ Page: 23

PRODUCTION OPERATIONS:

To aid in event reconstruction, personnel making entries in this section should be directed to fully document all data necessary to provide an accurate shift history. This should include equipment operation, equipment failures, unusual events, (accidents, injuries, emergencies) and their response.

MILITARY TIME	OPERATION AND/OR DESCRIPTION OF EVENT

Date:_____ Page: 24

MILITARY TIME | OPERATION AND/OR DESCRIPTION OF EVENT

COMPLETED/REVIEWED BY:

NOTE: Review for completeness, accuracy,and legibility.

	SIGNATURE	DATE
Lead Operator:		
CR Supervisor:		
Shift Manager:		

(*) denotes a revision to this procedure.

Verify this procedure is the latest revision using the Controlled Procedure Index.
By (Initials) _____ Date: _____

[NOTE: If the content of this procedure is incorrect or needs revision, it is the responsibility of the user to stop, place system (equipment) in a safe condition, and contact supervision for further instructions. Required procedural changes are made as supervision directs by preparing an immediate Procedure Change, Procedure Change Request, or Special Procedure.]

1.0 PURPOSE

1.1 This procedure describes the operation and maintenance systems in place at the F/H Effluent Treatment Facility.

1.2 The procedure satisfies Special Condition 37 of NPDES Permit SC 0000175, found on page 90 of the permit.

2.0 INFORMATION

2.1 SCOPE

2.1.1 This procedure pertains to the equipment, procedures, and regulations involving operation and maintenance of the F/H Effluent Treatment Facility.

* 2.1.2 The contents of this procedure are shown below.

SECTION	TITLE	PAGE
4.1	Process Description	3
4.2	Lift Station And Transfer Lines (To ETF)	3
4.3	Treatment Plant	4-8
4.4	Utrilities	9-12
4.5	Basins	12-13
4.6	ETF Influent/Effluent Specifications And Upper Permits	13-14
4.7	ETF Procedures	14-16
4.8	ETF Personnel Practices	16-17
5.0	Attachments	17-26

2.2 TERMS/DEFINITIONS

ETF	Effluent Treatment Facility
OIC	Operator in Charge
OR	Organic Removal
R/O	Reverse Osmosis
IX	Ion Exchange
SCDHEC	South Carolina Department of Health and Environmental Control

2.3 RESPONSIBILITIES

All WMO personnel assigned to the ETF who operate process equipment or supervise operators are responsible for knowledge of ETF process equipment, procedures, and regulatory requirements.

2.4 REFERENCES

2.4.1 The following procedures were used to write or are referenced in this procedure.

DPSTSAD-200-5	Safety Assessment F/H Effluent Treatment Facility
DPSP-84-1100	Basic Data - Basins and Lift Stations
DPSP-84-1101	Basic Data - Treatment Plant Manual 3Q Environmental Compliance Manual
241-FH-ETF-93	Entries in the ETF SCDHEC Log Book
241-FH-ETF-903	ETF Sample Schedule and Data Sheets
SW1.26	241-84H Critical Alarm Response Manual
SW1.31	F Lift Station Critical Alarm Response Manual
SW1.34	H Lift Station Critical Alarm Response Manual

2.5 SAFETY

All personnel assigned to or working in the ETF Facility shall comply with ETF and SRS safety rules.

2.6 RADIATION AND CONTAMINATION CONTROL

Comply with the Radiation Contamination Control requirements listed in the Radiation Work Permit (RWP) or Standing Radiation Work Permit (SRWP).

2.7 PREREQUISITES

None

3.0 RECORDS

None

4.0 PROCEDURE

4.1 PROCESS DESCRIPTION

The F/H Effluent Treatment Facility consists of lift stations and transfer lines from both F and H Areas, a 300 gpm (max.) treatment plant, and basins in both F and H Areas. Routine low level radioactive wastewater generated in the 200 Areas is collected at the two lift stations and is pumped to the treatment plant in H-Area. Most of the wastewater is purified in the treatment plant and pumped to Upper Three Runs Creek for discharge to a NPDES regulated outfall. Approximately 1.2 million gallons of 30 wt.% concentrate is also produced per year and sent to Tank 50 for final disposal in saltstone (Z-Area).

Basins are also included in each area to collect non-routine discharges of known or potentially contaminated storm water run-off and cooling water diversions. An existing 6 million gallon, single-lined, retention basin and a new 2 million gallon, double-lined, cooling water basin are included in each area for this purpose.

The collected water can be sent to the lift station for treatment by the treatment plant. Both the treatment plant and the lift stations can send highly contaminated (radioactively, not chemically) material to the high level tank farm via HDB-8, if required.

Attachment 1 is a diagram of the ETF Process Flowsheet. The descriptions given below discuss the majority of equipment and operating sequences in the ETF. A complete discussion is included in the approved procedures that are used to run the plant. Specific values given below should be considered for reference only. Detailed operating instructions (i.e., setpoints or operating ranges) can be found in approved procedures. A list of operating procedures can be found in the ETF Control Room.

4.2 LIFT STATIONS AND TRANSFER LINES (TO ETF)

A lift station is included in each area (F and H) to collect and pump routine wastewater to the treatment plant. The lift station consists of a 70,000 gallon tank, two transfer pumps, a sump pump, a hypochlorite addition system, and a continuous sampler.

Effluents from sources throughout the 200 Areas flow by gravity into the lift station tank. Batches of the wastewater are pumped at 500 gpm to the wastewater collection tanks at the treatment plant. Sodium hypochlorite can be injected into the lift station tank as the wastewater is pumped. The hypochlorite addition system is currently out of service and abandoned in place. Samples are taken and analyzed daily.

The transfer lines between the lift stations and the treatment plant consist of a polyethylene core pipe inside a polyethylene jacket pipe. Leak detection probes are included at each lift station and at the force main valve pit.

The transfer lines from the two areas contain several high point and low point manholes and converge at the force main valve pit. From there, flow is normally directed to the treatment plant. If activity levels are too high in the wastewater, flow can also be diverted at the force main valve pit to HDB-8 and from there on to the rest of the tank farm.

[NOTE: SCDHEC must be notified prior to any tank farm transfers for reasons other than high activity.

4.3 TREATMENT PLANT

The treatment plant was designed to operate at an average capacity of 165 gpm. A maximum capacity of 300 gpm can be obtained if all equipment is operating. This provides a 135 gpm surge capacity for working off contaminated cooling water or storm water. Wastewater entering the wastewater collection tanks from the lift stations is treated by a series of process units and released to Upper Three Runs Creeks via NPDES permitted outfall H-016. A much smaller volume of 30 wt.% waste concentrate is also produced and sent to tank 50 for eventual disposal as saltstone.

The treatment plant process includes the following:

- Wastewater collection and flow equalization
- pH adjustment
- Filtration
- Organic removal, including mercury removal and activated carbon
- Reverse osmosis
- Mercury removal by ion exchange
- Cation exchange
- Treated water storage
- Evaporation

4.3.1 WASTEWATER COLLECTION

Two 450,000 gallon wastewater collection tanks receive wastewater from the lift stations and provide holdup capacity for the treatment plant. Concentrated nitric acid or caustic can be added to the tanks for feed pretreatment. Normally the total level within the two tanks will be maintained below 200,000 gallons total to provide maximum holdup volume in case the treatment plant experiences operational problems. At that level, 1-2 days of holdup are available before 200 Area wastewater generators must shutdown. One of two transfer pumps is used to pump the wastewater through an inline radiation monitor, basket strainers, and on to the pH adjustment tanks to begin treatment.

Two 450,000 gallon wastewater collection tanks receive wastewater from the lift stations and provide holdup capacity for the treamtment plant. Concentrated nitric acid or caustic can be added to the tanks for feed pretreatment. Normally the total level within the two tanks will be maintained below 200,000 gallons total to provide maximum holdup volume in case the treatment plant experiences operational problems. At that level 1 - 2 days of holdup are available before 200 Area wastewater generators must shutdown. One of two transfer pumps is used to pump the wastewater through an inline radiation monitor, basket strainers, and on the pH adjustment tanks to begin treatment,

4.3.2 pH ADJUSTMENT

Wastewater is pumped from wastewater collection to pH adjustment tanks #1 and 2, where the wastewater is adjusted to a pH of 7-8 to precipitate suspended solids. Nitric acid and caustic (4-10 wt%) are injected as needed, and dual pH probes measure the pH of each agitated tank. Tank #1 provides course adjustment while tank #2 fine tunes to pH 7-8. Flow from each tank is by gravity using an overflow line.

4.3.3 FILTRATION

The pH adjusted wastewater enters the filter feed tank and then is fed to one of three 100 gpm crossflow filter trains. Also included in the filter system are the filter concentrate tank, the filter cleaning tank, and the cleaning solution mix tank.

Each filter train includes 3 stages, with each stage consisting of a pump and four filter housings. Ceramic filter elements are loaded in each housing and provide suspended solids separation of the wastewater feed. Suspended solids, mainly iron and aluminum hydroxides, are concentrated from stage to stage up to a level of 1 wt% leaving the third stage. The 100 gpm feed is separated into approximately 99 gpm of permeate and 1 gpm of concentrate. Liquid backpulsing is used periodically to maintain consistent flow through each filter train.

Concentrate from the 3 trains is directed into the filter concentrate tank and is normally transferred to the evaporator feed tanks for further volume reduction. Permeate, which comprises the bulk of the flow, passes on to the organic removal feed tank.

The filter cleaning tank is used on an infrequent basis to chemically clean the filter trains to restore lost capacity. The tank can be steam heated to improve cleaning. Cleaning solutions are mixed in the cleaning solution mix tank and transferred to the cleaning tank for use. Spent cleaning solutions are transferred to the evaporator feed tanks for disposal.

4.3.4 ORGANIC REMOVAL

Included in organic removal (OR) are the organic removal feed tank, two feed pumps, 3 mercury removal columns, three activated carbon columns, 2 cartridge filters, and a carbon column dewatering system.

Evaporator overheads combine with filter permeate to feed the organic removal system. Under normal operation, 3 of the mercury removal columns are on-line in parallel service, 2 of the activated carbon columns are on line in series service, and one cartridge filter is on line to trap any carbon fines that may bleed through.

The mercury removal columns contain a special resin, Duolite GT-73, which absorbs mercury and other heavy metals to prevent their adsorption on the activated carbon. This prevents the activated carbon from becoming a mixed (RCRA Hazardous and Radioactive) waste. A resin charge lasts approximately one year at design flowrate and concentration, after which the resin is slurried out and replaced with fresh resin.

Activated carbon columns are used downstream to remove organic components from the wastewater. Some radioactive components are also adsorbed, making the carbon a radioactive waste. Replacement frequency is estimated to be one per every 2-3 months of operation at design flowrate/composition.

Columns are disposed of in the Waste Management Solid Waste Disposal Facility. Two columns are operated in a lead/lag mode in the process with the lag column serving as a breakthrough bed. Daily analysis of the influent and midfluent determines when a column needs replacing.

The third column serves as a spare after each exhausted column is replaced. Each exhausted column is dewatered prior to disposal. Compressed air displaces water from the carbon column to the dewatering tank and the water is pumped to the wastewater collection tanks. Wastewater flow leaving organic removal passes on to the R/O cooler.

4.3.5 REVERSE OSMOSIS

Reverse osmosis (R/O) includes the R/O cooler (heat exchanger) and its three evaporative fluid coolers, the R/O pH adjustment tank, the R/O feed tank, three R/O feed pumps, three 100 gpm R/O trains, and the R/O cleaning circulation tank. R/O is the main separation device in the treatment process and removes the majority of the total solids that exist in the wastewater feed.

Wastewater enters the R/O cooler and is cooled to a temperature of 35 degrees Celsius or less to maximize performance of the downstream R/O trains. Evaporative coolers, similar to cooling towers, are used when needed to provide cooled water for the shell side of the R/O cooler. A chemical treatment package unit is included with each evaporative cooler to prevent biological growth and corrosion.

Wastewater leaving the R/O cooler then passes through the R/O pH adjustment tank, R/O feed tank, and is pumped through the R/O trains.

Acid is added to the pH adjustment tank to lower the pH to 6 in order to reduce mineral scaling in the R/O trains.

The R/O feed pumps pressurize the wastewater to 200-600 psi to feed the trains. Each R/O train contains three stages, with stage 1 consisting of 2 housings and stages 2 and 3 each consisting of 1 housing. A booster pump is included as a part of each train, located between stage 2 and 3, which can be used to increase the pressure feeding stage 3 up to 1000 psi, but the pumps have been disabled due to lack of need and pressure concerns.

R/O uses a membrane to reject dissolved solids (salts) and separate wastewater into a 90 gpm permeate stream and a 10 gpm 2-9 wt% concentrate stream. The concentrate is sent on to evaporation for further volume reduction. R/O permeate passes on to the ion exchange pH adjustment tank.

The R/O cleaning solution circulation tank is used on an infrequent basis to chemically clean the R/O trains to restore lost capacity. Like filter cleaning, cleaning solutions are mixed in the cleaning solution mix tank and transferred to the R/O cleaning tank for use. Spent cleaning solutions are sent to the evaporator feed tanks or the waste concentrate tanks (depending upon which chemicals are used) for disposal.

4.3.6 ION EXCHANGE

In the ion exchange (IX) system, wastewater flow passes through the IX pH adjustment tank, the IX feed tank, one of two IX feed pumps, two mercury removal columns in parallel, two of three cation columns, and then into one of the three treated water storage tanks.

Caustic is added to the IX pH adjustment tank to raise the pH to within a range of 6-9 to prepare the wastewater for discharge. No other pH adjustment occurs after this step.

The mercury removal columns contain the same resin as the OR mercury removal columns and serve as a polishing step to remove mercury prior to discharge. Resin in these columns is expected to need replacement every 3-10 years and is replaced similarly to that used in organic removal.

Regenerable cation columns contain a special resin, Diaion HPK-25, which removes remaining cesium and strontium that exists in the wastewater stream.

Two columns are operated in a lead/lag mode until breakthrough occurs in the lead column. Exhausted columns are regenerated with 15 wt % sodium nitrate to restore the adsorption capacity of the resin.

Regenerant solutions are sent to the evaporator feed tanks for volume reduction and disposal. Regenerant solutions are prepared in the sodium nitrate mix tank by adding 50% caustic, 64% nitric acid, and water. Cation resin will require replacement approximately every three years. Both types of resin in IX are replaced by slurrying to the spent resin tank, draining off all water, and then packaging the resin in waste boxes for disposal in the burial ground.

Wastewater leaving the cation columns is sampled and enters one of the treated water tanks. After sample analysis of indicating compounds confirms that the treated water batch is suitable for discharge (i.e., within NPDES discharge limits), the batch is pumped to Upper Three Runs Creek (UTRC). A second sampler is located on the discharge line at UTRC and is used to obtain samples for measuring radionuclide release to the environment.

The transfer line to UTRC contains several high point and low point manholes. Three transfer pumps are included with the treated water tanks, two to be used for discharge to UTRC and one for recycling water that fails to meet discharge criteria back to the wastewater collection tanks.

4.3.7 EVAPORATION

Concentrates from filtration and reverse osmosis, ion exchange regenerants, and miscellaneous cleaning solutions are sent to the evaporator system for further volume reduction. Evaporation produces a 30 wt % bottoms stream which is suitable for discharge to tank 50 as saltstone feed.

The evaporator system includes two feed tanks with two sample pumps and two feed pumps, two 25 gpm evaporators, an air cooled condenser with two fans, a process condensate tank, and two waste concentrate tanks with two transfer pumps.

Evaporator feed is first pH adjusted to 4.0-5.5 by adding acid on a batch basis. One feed tank is always being filled while the second is feeding the evaporator(s).

One evaporator is required for average operation and the second is a spare. The evaporator is continuously fed and produces mostly overheads and a minimal amount of bottoms. Liquid in the evaporator is recirculated through a steam heater tube bundle and is vaporized in a flash pot.

Overhead vapors condense in the air cooled condenser and gravity flow into the process condensate tank. From there, the condensed overheads are transferred to the organic removal feed tank. Bottoms from the evaporator(s) are sent to one of the waste concentrate tanks.

Prior to transferring to Tank 50, the waste concentrate is pH adjusted by adding sufficient 50% caustic to obtain 1.1 molar hydroxide. Highly contaminated (radioactively) evaporator bottoms can also be sent to HDB-8 to enter the high level tank farm.

[NOTE: SCDHEC must be notified prior to any tank farm transfers for reasons other than high activity.]

4.4 UTILITIES

4.4.1 STEAM

Steam at 300 psi pressure is supplied to the ETF from H-Area. A large steam reducing station and a spare are provided to lower steam pressure to 35-40 psi and supply sufficient steam for the evaporator(s) and other minor steam users. A smaller reducing station is also available to regulate a lower steam usage when the evaporators are not in operation.

Steam is supplied to the evaporators, steam stations throughout the plant, the control building water heater, makeup air units, and the air cooled condenser (for freeze protection).

A steam condensate receiver tank collects condensate from the evaporator heat exchangers and uses one of two pumps to transfer the liquid to the segregated water system in H-Area. If the condensate becomes contaminated, it can also be pumped to the wastewater collection tanks for treatment. Two smaller pumps on the steam condensate receiver supply liquid to desuperheat the steam at the two large steam reducing stations.

4.4.2 ACID AND CAUSTIC

Included in acid/caustic utilities are the acid/caustic unloading area, acid storage tank, caustic storage tank, acid day tank, caustic day tank, and sodium nitrate mix tank.

The unloading area includes equipment for unloading trailer loads of 64% nitric acid and 50% caustic into the storage tanks. One pump is included for acid unloading and one for caustic unloading. The strong acid and caustic are unloaded and stored in the respective storage tanks. Each of the storage and day tanks has two pumps for transferring from the tank.

In addition, acid storage has a metering pump used exclusively for sodium nitrate mixing. Storage tank pumps are only used upon demand. Users of acid storage tank include the acid day tank, the wastewater collection tanks, and the sodium nitrate mix tank.

Users of the caustic storage tank include the caustic day tank, the waste concentrate tanks, the wastewater collection tanks, and the sodium nitrate mix tank. Day tanks are used to obtain dilute reagents for use in all pH adjustment steps. Both day tanks maintain pressurized headers to supply reagent to all of the pH adjustment users.

Users of the acid day tank include pH adjustments tanks #1 and #2, R/O pH adjustment, the cleaning solution mix tank, and the evaporator feed tanks. Users of the caustic day tank include pH adjustment tanks #1 and #2, IX pH adjustment, and the cleaning solution mix tank.

4.4.3 DOMESTIC AND PROCESS WATER

Domestic water is supplied to the ETF from H-Area. Domestic water feeds the safety showers, restrooms and lunchroom areas, compressor cooling towers, R/O fluid coolers, and the process water tank (primary user). Three pumps are included with the process water tank to ensure that the process water header stays pressurized.

Process water is used to provide cooling at the sodium nitrate mix tank, water at hose stations, and makeup and flush water for tanks throughout the treatment plant. A high pressure water pump feeds directly off of the domestic water header and provides high pressure water to hose stations located inside the treatment building.

4.4.4 AIR COMPRESSORS

Three reciprocating air compressors, an air receiver, and two sets of dual air dryers provide plant air and instrument air for the treatment plant. Normally, only 2 compressors are required to maintain sufficient air pressure. Carbon bed dewatering and air hose stations are the only users of plant air.

Instrument air is used to operate all air operated instruments and valves throughout the plant. A separate breathing air compressor and purifier system exists to supply air for plastic suit work.

Two small cooling towers recirculate cooling water to all 4 compressors to dissipate heat. Only one tower is required under normal operation. A chemical treatment package prevents biological growth and corrosion within the cooling towers.

4.4.5 SUMPS

Sumps are provided for containment in the following locations:

- Wastewater collection (& wastewater collection pumps) dike
- Evaporator feed (& evaporator feed pumps) dike
- Acid/caustic unloading and storage
- Day tank/sodium nitrate mix tank dike
- RO & IX feed tank area (& organic removal feed tank) dike
- Organic removal column area
- Evaporator condenser area dike
- Evaporator #1 area
- Evaporator #2 area
- IX area
- Clean room area
- Lab area

All sumps can be pumped to the wastewater collection tank for treatment. All of the outside sumps (except organic removal) can be pumped to a storm ditch to discharge rain water if pH and beta-gamma/alpha levels are within limits.

The evaporator area (indoor) sumps can also be pumped to the evaporator feed tanks.

4.4.6 BUILDING AND VESSEL VENT SYSTEM

A makeup air unit, 5 large HEPA filters, 2 small basket HEPA filters, three blowers, and isokinetic sampler, and a stack are included in the treatment building and vessel vent system. The makeup air unit supplies heated air to the building process area to prevent freezing in winter.

Two of the three blowers are kept operating to remove 4 volumes of building air per hour and filter the air through the five large HEPA filters. A much smaller volume of air is drawn off of each contaminated process vessel and is filtered through the two small HEPA filters. The HEPA filtered air is sampled by isokinetic sampling as it enters the stack.

A smaller system, similar to that given above, is also included to treat the RCA rooms in the control building (i.e., regulated maintenance shop, Labs, and change rooms in the RCA).

4.4.7 ELECTRICAL

Two 13.8 KVA lines supply separate power to two separate transformers at the ETF. The transformers step down the power to 480 volt for a usable power source. Switchgear and Motor Control Centers are used to distribute the power in a manner which allows individual lockouts.

A diesel generator is provided at the treatment plant as well as at each basin/lift station area. The basin/lift station generator provides adequate power to run all equipment. The treatment plant generator only has capacity to operate equipment required for a safe standby condition.

4.4.8 DISTRIBUTED CONTROL SYSTEM

A Moore Products distributed control system (DCS) is used along with a Gould programmable logic controllers (PLC) to provide process control. Operator interface is available on four consoles. Most equipment within the treatment plant is operated from the operator consoles. Any critical safety devices requiring control are kept separate from the DCS.

4.4.9 HP EQUIPMENT

Area gamma monitors are located strategically throughout the treatment plant for detection of high levels of radiation.

Continuous air monitors are also used to detect airborne contamination. Personal monitoring stations are used to prevent contamination between restricted and unrestricted areas.

4.5 BASINS

Included near the lift station in each area are two basins for collecting large releases of potential or known radioactively contaminated water. Each cooling water basin includes 2 high basin transfer pumps, 1 moderate basin transfer pump, 1 leak detection pump, and 1 sump pump. In addition, the H-Area cooling water basin includes 2 screw pumps and an inlet sump pump. Each retention basin includes 2 transfer pumps.

A 2 million gallon cooling water basin contains a double liner and is split into a 1.5 million gallon portion and a 0.5 million gallon portion. The smaller portion is used to segregate most or all of the radioactivity during a cooling water diversion from the canyon facilities. The larger portion collects the remaining volume.

An existing retention basin (single liner) makes up the second basin in each area. It is used to collect contaminated storm water from the high level waste tank farm as well as any cooling water in excess of the 2 million gallons collected first in the cooling water basin.

Both basins can be pumped to the lift station for processing at the treatment plant or for routing to the high level waste tank farm. Any uncontaminated water can also be pumped from either basin to NPDES outfalls going to Four Mile Creek.

4.6 ETF INFLUENT/EFFLUENT SPECIFICATIONS AND NPDES PERMITS

4.6.1 INFLUENT AND EFFLUENT SPECIFICATIONS

All of the samples discussed below are internal ETF samples which are not analyzed by a certified lab. All samples required for permits are taken by the environmental monitoring group and analyzed by an off-site certified lab.

Samples are taken daily at each lift station area to characterize the influent that feeds the treatment plant. In addition, these samples are also used to determine when ETF waste concentrate may approach Tank 50 specifications for saltstone feed (since most of the solids that feed ETF end up in the concentrate). Limits for ETF influent are outlined in Procedure 241-FH-ETF-903, ETF Sample Schedule and Data Sheets. If any of these limits are exceeded, the Operator-in-Charge (OIC) for the facility may elect to take extra actions to protect the process, or to ensure that waste concentrate is within saltstone specifications. Such actions should occur infrequently since the ETF was designed to handle a wide range of influent feed.

Samples are also taken of each treated water tank before discharge is allowed. Specifications for discharging treated water to the creek are also given in Procedure 241-FH-ETF-903, ETF Sample Schedule and Data Sheets. Sample results are reviewed and approved by the OIC or an alternate prior to discharge. If a treated water batch is out of specifications, it will be recycled back through the process for additional treatment.

When a retention basin or cooling water basin at F or H Area receives a diversion, the contents are sampled for radioactivity to determine the discharge destination. Samples are also taken during the transfer to confirm the original results.

4.6.2 ETF NPDES PERMITS

Discharges from the ETF to Upper Three Runs Creek (UTRC) and Four Mile Creek (FMC) are regulated by NPDES permit #SC0000175. A copy of the permit requirements associated with effluent limitations at the ETF are given in Attachment 2 Discharge of contaminants above the stated limits is unlawful. Discharges from the treatment plant include outfalls H-016 for treated water discharge and H-008 for cooling tower blowdown discharge. The remaining 6 sheets cover discharges from the cooling water and retention basins. A summary of the outfalls is given below:

SRS NPDES Outfall	Receives Discharges From	Discharges To
F-008	ETF F-012 & F-013 outfalls and other contributors	FMC
F-012	ETF F-Area retention basin	FMC
F-013	ETF F-Area cooling water basin	FMC
H-008	ETF cooling tower blowdown and other contributors	FMC
H-012	ETF H-017 & H-018 outfalls and other contributors	FMC
H-016	ETF treated water (treatment plant)	UTRC
H-017	ETF H-Area retention basin	FMC
H-018	ETF H-Area cooling water basin	FMC

All sampling requirements for the outfalls are taken and analyzed by the SRS environmental monitoring group and an off-site certified laboratory. An internal sampling program (noncertified) of indicator compounds is used at the ETF to confirm compliance.

4.7 ETF PROCEDURES

* 4.7.1 OPERATIONS PROCEDURES

Procedures used to operate the ETF include operating procedures, sketches, and lockout procedures. Copies of all procedures can be found in a file cabinet in the ETF control room. The up-to-date index is located in the procedure cabinet. It is the operators responsibility to be sure that he/she is using the latest revision of each procedure. Completed procedures are filed for records retention.

The operating procedures for the various process units describe the operating characteristics that produce maximum treatment efficiency. In addition, section 4.1 of procedure 241-H-ETF-162, "Re-Starting F/H ETF DCS After Restoring Power and General DCS Operation" lists the controller and set point settings for normal operation. The various operating procedures also describe corrective actions that should be taken when operating difficulties are encountered. Additional corrective actions are given in the following Critical Alarm Response Manuals:

SW1.26 241-84H Critical Alarm Response Manual
SW1.31 F Lift Station Critical Alarm Response Manual
SW1.34 H Lift Station Critical Alarm Response Manual

4.7.2 SAFETY AND EMERGENCY PROCEDURES

4.7.2.1 SRS Safety Manual

A copy of the SRS Safety manual is available in the ETF control building. It is used by the operator to ensure compliance with all plant safety requirements.

4.7.2.2 Material Safety Data Sheets (MSDS)

A copy of the Waste Management MSDS's is located in the ETF control building. All chemicals used in the ETF are included in the list. Each operator is familiar with the hazards involved prior to using specific chemicals.

4.7.2.3 Waste Management Emergency Procedures

A list of emergency procedures, which are applicable to ETF, are given below. All operators are familiar with these procedures and use them during emergency situations.

Procedure	Title
241-FHG-8507	Waste Management Actions for Forced Entry or Terrorist Attach
241-FHG-8512	Severe Weather Conditions
241-FHG-8515	Major Accident Actions
241-FH-9540	Emergency Shutdown and Evacuation of Waste Management Facilities
241-FH-9562	Waste Management Response to Spills
241-FH-9941	Emergency Actions Upon Receipt of Bomb Threat
241-H-ETF-8000	Emergency Loss of Electrical, Steam, and Air at ETF
241-FH-ETF-500	ETF Fire Control Plan

4.7.3 MAINTENANCE PROCEDURES

A list of scheduled maintenance items (ticklers) is located in a current index in the WMM Office. The frequency and magnitude of each task is defined in the respective procedure.

In addition to these ticklers, each piece of ETF equipment is registered in the SRP Preventive Maintenance (PM) program. Scheduled maintenance and inspections are set up for each equipment piece. The ETF maintenance coordinator schedules these maintenance items as they occur.

Procedures for preventive (and some corrective) maintenance are currently being developed by the Waste Management Works Engineering (WMM) Procedure Group. A listing of the maintenance procedures (including special procedures) can be obtained from a WMM supervisor. Plans are to develop permanent procedures for all routine preventive and corrective maintenance activities.

A "blueprint file (BPF)" of vendor drawings and other information is located in the WMM first line supervisors' office in the ETF control building. Equipment manuals and catalogs are located in the supervisors' office or in the maintenance and E&I shops.

4.8 ETF PERSONNEL PRACTICES

4.8.1 SRS SERVICE MANUAL

The SRS Service Manual defines the pay practices and policies for all workers at the Savannah River Plant. A copy is available in the control building.

4.8.2 ETF CERTIFICATION REQUIREMENTS

Wastewater certification requirements for all ETF operators are defined in procedure. All operators must, at a minimum, be a trainee under supervision of a graded wastewater operator. An Operator-in-Charge (OIC) with "A" level certification is required to oversee ETF operation. More information can be found in Procedure ECM 20.1, "WSRC Environmental Systems Certified Operator Procedure", Manual 3Q, Environmental Compliance Manual.

4.8.3 SCDHEC OPERATOR LOG BOOK

Operators at the ETF maintain a SCDHEC log book available for SCDHEC review, which documents the general operation and maintenance practices on a daily basis. Normally the SCDHEC log book contains the date at the top of the page and a few entries for that date. A new page is used for each new day. Details of the normal plant operations are to be included in the SCDHEC log book, but is included in a separate log book to aid in continuity between shifts. The OIC or an alternate signs the SCDHEC log book daily.

Operators include in the log book the time and date of any sump transfers to the storm ditch and any diversions of waste concentrate away from tank 50. They also include the time and date of taking major equipment pieces out of operation for maintenance reasons, and the time and date for returning such equipment back into operation.

Each of the following are also entered into the log book under the appropriate date:

- time for beginning waste concentrate transfers to tank 50.
- time for beginning treated water transfers to UTRC.
- time for beginning and ending retention basin transfers to FMC.
- time for beginning and ending cooling water basin transfers to FMC.

For additional information, refer to procedure 241-FH-ETF-193, "Entries in the ETF SCDHEC Log Book".

5.0 ATTACHMENTS

5.1	Attachment 1	ETF Flow Diagram
5.2	Attachment 2	NPDES Permit Requirements

5.1 ATTACHMENT 1

F/H ETF PROCESS FLOW SHEET

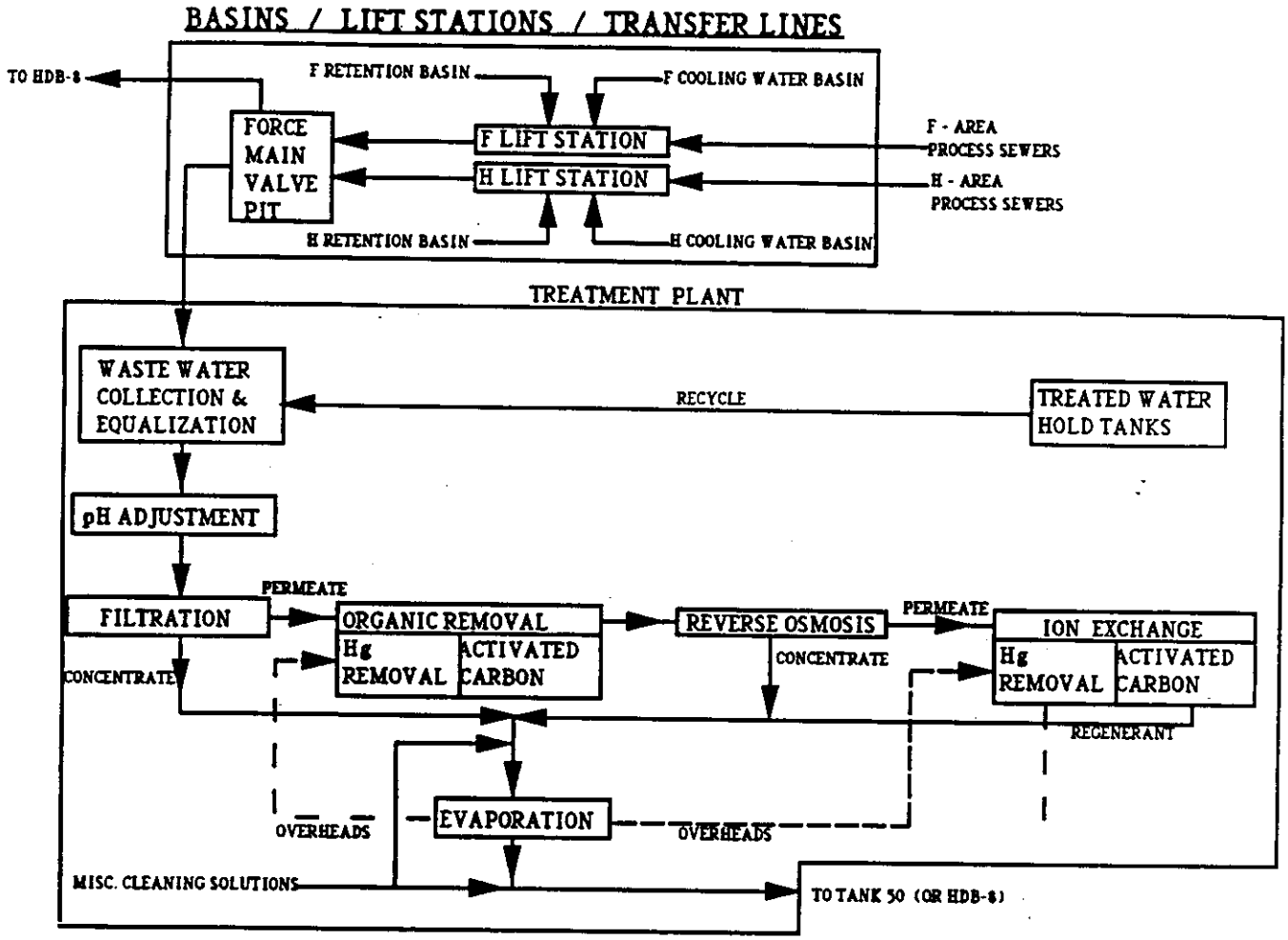

FLOW PATH PRESENTLEY NOT IN USE

FLOW PATH- PRESENTLY IN USE

ATTACHMENT 2, NPDES PERMIT REQUIREMENTS

A. EFFLUENT LIMITATIONS AND MONITORING REQUIREMENTS

During the period beginning on the effective date and lasting through the expiration date, the permittee is authorized to discharge from outfall(s) serial number(s), F-008, neutralization, cooling, steam condensate, and process wastewater.

Such discharge shall be limited and monitored by the permittee as specified below:

Effluent Characteristics	Discharge Limitations				Monitoring Requirements	
	kg/day	lbs/day	Other Units (Specify)			
	Daily Avg.	Daily Max.	Daily Avg.	Daily Max	Measurement Frequency	Sample Type
Flow-m^3/day (MGD)	-------	-------	-------	-------	Daily	Continuous Record
Total Suspended Solids	-------	-------	-------	40 mg/1	1/month	Grab
Oil & Grease	-------	-------	10 mg/1	15 mg/1	1/month	Grab
*Temperature (In stream after mixing)	-------	-------	-------	32.2°C (90°F)	1/month	Grab

[NOTE: Flow is approximately 1.26 MGD.]

*This discharge shall not cause the temperature of the receiving stream to be raised by more than 2.8°C (5°F) above the ambient stream temperature.

The pH shall not be less than 4.6 standard units nor greater than 9.0 standard units and shall be monitored 1/month by grab sample.

There shall be no discharge of floating solids or visible foam in other than trace amounts.

Samples taken in compliance with the monitoring requirements specified above shall be taken at the following locations(s): At or near the outfall prior to mixing with the receiving stream. Temperature is to be measured in stream immediately after mixing.

MODIFICATION DATE_____ _____

Bureau of Water Pollution Control

A. EFFLUENT LIMITATIONS AND MONITORING REQUIREMENTS

1. During period beginning on the effective date of this permit and lasting through the expiration date the permittee is authorized to discharge from outfall(s) serial number(s) F-012; storm water run-off retention basin effluent.

   Such discharge shall be limited and monitored by the permittee as specified below:

Effluent Characteristics	Discharge Limitations				Monitoring Requirements	
	kg/day Daily Avg.	lbs/day Daily Max.	Other Units (Specify) Daily Avg.	Daily Max	Measurement Frequency	Sample Type
Flow-m^3/day (MGD)	-------	-------	-------	RR	1/occurrence	Estimate
Total Suspended Solids	-------	-------	-------	RR	1/occurrence	Grab
Ammonia	-------	-------	-------	RR	1/occurrence	Grab
Chromium	-------	-------	-------	RR	1/occurrence	Grab
Copper	-------	-------	-------	RR	1/occurrence	Grab
Lead	-------	-------	-------	RR	1/occurrence	Grab
Mercury	-------	-------	-------	RR	1/occurrence	Grab
Zinc	-------	-------	-------	RR	1/occurrence	Grab
Manganese	-------	-------	-------	RR	1/occurrence	Grab
Nickel	-------	-------	-------	RR	1/occurrence	Grab
Aluminum	-------	-------	-------	RR	1/occurrence	Grab
Nitrates	-------	-------	-------	RR	1/occurrence	Grab
Uranium	-------	-------	-------	RR	1/occurrence	Grab

2. The flow rate varies.
3. RR - Record Results
4. Receiving water: Ditch to Outfall F-008, then to unnamed tributary of Four Mile Creek
5. The pH shall not be less than RR standard units nor greater than RR standard units and shall be monitored once per occurrence by grab sample.
6. There shall be no discharge of floating solids or visible foam in other than trace amounts; nor, shall the effluent cause a visible sheen on the receiving waters.
7. Samples taken in compliance with the monitoring requirements specified above shall be taken at the following locations(s): at or near the outfall, but prior to mixing with other waters of the ditch

MODIFICATION DATE_____ _____

Bureau of Water Pollution Control

A. EFFLUENT LIMITATIONS AND MONITORING REQUIREMENTS

1. During period beginning on the effective date of this permit and lasting through the expiration date the permittee is authorized to discharge from outfall(s) serial number(s) F-013; storm water run-off retention basin effluent.

   Such discharge shall be limited and monitored by the permittee as specified below:

Effluent Characteristics	Discharge Limitations				Monitoring Requirements	
	kg/day Daily Avg.	lbs/day Daily Max.	Other Units (Specify) Daily Avg.	Daily Max	Measurement Frequency	Sample Type
Flow-m^3/day (MGD)	-------	-------	-------	RR	1/occurrence	Estimate
Total Suspended Solids	-------	-------	-------	RR	1/occurrence	Grab
Ammonia	-------	-------	-------	RR	1/occurrence	Grab
Chromium	-------	-------	-------	RR	1/occurrence	Grab
Copper	-------	-------	-------	RR	1/occurrence	Grab
Lead	-------	-------	-------	RR	1/occurrence	Grab
Mercury	-------	-------	-------	RR	1/occurrence	Grab
Zinc	-------	-------	-------	RR	1/occurrence	Grab
Manganese	-------	-------	-------	RR	1/occurrence	Grab
Nickel	-------	-------	-------	RR	1/occurrence	Grab
Aluminum	-------	-------	-------	RR	1/occurrence	Grab
Nitrates	-------	-------	-------	RR	1/occurrence	Grab
Uranium	-------	-------	-------	RR	1/occurrence	Grab

2. The flow rate is approximately 0.53 MDGD Average, 1 MGD Maximum.
3. RR - Record Results
4. Receiving water: Ditch to Outfall F-008, then to unnamed tributary of Four Mile Creek
5. The pH shall not be less than RR standard units nor greater than RR standard units and shall be monitored once per occurrence by grab sample.
6. There shall be no discharge of floating solids or visible foam in other than trace amounts; nor, shall the effluent cause a visible sheen on the receiving waters.
7. Samples taken in compliance with the monitoring requirements specified above shall be taken at the following location(s): at or near the outfall, but prior to mixing with other waters of the ditch

MODIFICATION DATE_____ _____

Bureau of Water Pollution Control

A. EFFLUENT LIMITATIONS AND MONITORING REQUIREMENTS

During the period beginning on the effective date and lasting through the expiration date, the permittee is authorized to discharge from outfall(s) serial number(s) H-012, cooling, and steam condensate, replacement tritium facility decontamination showers, floor drains.

Such discharge shall be limited and monitored by the permittee as specified below:

Effluent Characteristics	Discharge Limitations				Monitoring Requirements	
	kg/day		lbs/day		Other Units (Specify	
	Daily Avg.	Daily Max.	Daily Avg.	Daily Max	Measurement Frequency	Sample Type
Flow-m^3/day (MGD)	-------	-------	-------	-------	Daily	Continuous Record
Total Suspended Solids	-------	-------	-------	40 mg/1	1/month	Grab
Oil & Grease	-------	-------	10 mg/1	15 mg/1	1/month	Grab
Sulfates	-------	-------	-------	-------	1/Quarter	Grab
*Temperature	-------	-------	-------	32.2°C(90°F)	1/month	Grab
(In stream after mixing)						

NOTE: Flow is approximately 350,000 gpd.

*This discharge shall not cause the temperature of the receiving stream to be raised by more than 2.8°C (5°F) above the ambient stream temperature.

The pH shall not be less than 4.6 standard units nor greater than 9.0 standard units and shall be monitored 1/month by grab sample.

There shall be no discharge of floating solids or visible foam in other than trace amounts.

Samples taken in compliance with the monitoring requirements specified above shall be taken at the following locations(s): At or near the outfall prior to mixing with the receiving stream. Temperature is to be measured in stream immediately after mixing.

GMODIFICATION DATE_____ _____

Bureau of Water Pollution Control

A. EFFLUENT LIMITATIONS AND MONITORING REQUIREMENTS

1. During period beginning on the effective date of this permit and lasting through the expiration date the permittee is authorized to discharge from outfall(s) serial number(s) H-016; process, cooling water, stormwater..

Such discharge shall be limited and monitored by the permittee as specified below:

Effluent Characteristics	Discharge Limitations				Monitoring Requirements	
	kg/day Daily Avg.	lbs/day Daily Max.	Other Units (Specify) Daily Avg.	Daily Max	Measurement Frequency	Sample Type
Flow-m^3/day (MGD)	-------	-------	-------	-------	Daily	Continuous
Biochemical Oxygen demand (BOD_5)	25.6(56.4)	51.3(112.9)	20mg/1	40,g/1	1/week	24Hr. Composite
Total Suspended Solids (TSS)	38.5(84.6)	76.9(169.3)	30mg/1	60mg/1	1/week	24Hr. Composite
Ammonia	25.6(56.44)	MRO	20mg/1	MRO	1/week	24Hr. Composite
Oil & Grease	12.8(28.2)	19.2(42.33)	10mg/1	15mg/1	1/week	Grab
Chromium	2.2(4.8)	3.5(7.8)	1.71mg/1	2.77mg/1	1/week	24Hr. Composite
Copper	1.9(4.1)	2.6(5.8)	1.46mg/1	2.07mg/1	1/week	24Hr. Composite
Lead	0.37(.82)	0.75(1.64)	0.29mg/1	0.58mg/1	1/week	24Hr. Composite
Mercury	0.58(0.127)	0.22(0.49)	0.045mg/1	0.175mg/1	1/week	24Hr. Composite
Zinc	1.9(4.18)	3.34(7.37)	1.48mg/1	2.61mg/1	1/week	24Hr. Composite

(1) Based on average discharge flow rate of 235 GPM.

(2) MRO = Monitor and Report Results Only

(3) Composite samples shall be collected in accordance with Part I.C., Paragraph 8.J., Items 1, 2, or 3.Upper Three Runs Creek

MODIFICATION DATE_____ _____

Bureau of Water Pollution Control

A. EFFLUENT LIMITATIONS AND MONITORING REQUIREMENTS

1. During period beginning on the effective date of this permit and lasting through the expiration date the permittee is authorized to discharge from outfall(s) serial number(s) H-016; process, cooling water, stormwater..

Such discharge shall be limited and monitored by the permittee as specified below:

Effluent Characteristics	Discharge Limitations				Monitoring Requirements	
	kg/day Daily Avg.	lbs/day Daily Max.	Other Units (Specify) Daily Avg.	Daily Max	Measurement Frequency	Sample Type
Manganese	-------	-------	MRO	MRO	1/week	24Hr Composite
Nitrates	-------	-------	MRO	MRO	1/week	24Hr. Composite
Temperature	-------	-------	-------	90°F(32.2°C)	1/week	Grab
Uranium	-------	-------	MRO	MRO	1/month	24Hr. Composite
Total Residual Chlorine (TRC)	-------	-------	MRO	MRO	1/month	Grab
Aluminum	-------	-------	MRO	MRO	1/month	24Hr. Composite
Nickel	-------	-------	MRO	MRO	1/month	24Hr. Composite

(1) Based on average discharge flow rate of 235 GPM.

(2) MRO = Monitor and Report Results Only

(3) Composite samples shall be collected in accordance with Part I.C., Paragraph 8.J., Items 1, 2, or 3.

The pH shall not be less than 6.0 standard units nor greater than 9.0 standard units and shall be monitored daily by grab sample.

There shall be no discharge of floating solids or visible foam in other than trace amounts; nor, shall the effluent cause a visible sheen on the receiving waters.

Samples taken in compliance with the monitoring requirements specified above shall be taken at the following locations(s): at or near the Outfall after treatment but prior to mixing with the receiving stream.

MODIFICATION DATE_____ _____

Bureau of Water Pollution Control

A. EFFLUENT LIMITATIONS AND MONITORING REQUIREMENTS

1. During period beginning on the effective date of this permit and lasting through the expiration date the permittee is authorized to discharge from outfall(s) serial number(s) H-017; storm water run-off retention basin effluent.

   Such discharge shall be limited and monitored by the permittee as specified below:

Effluent Characteristics	Discharge Limitations				Monitoring Requirements	
	kg/day Daily Avg.	lbs/day Daily Max.	Other Units (Specify) Daily Avg.	Daily Max	Measurement Frequency	Sample Type
Flow-m^3/day (MGD)	-------	-------	-------	RR	1/occurrence	Estimate
Total Suspended Solids	-------	-------	-------	RR	1/occurrence	Grab
Ammonia	-------	-------	-------	RR	1/occurrence	Grab
Chromium	-------	-------	-------	RR	1/occurrence	Grab
Copper	-------	-------	-------	RR	1/occurrence	Grab
Lead	-------	-------	-------	RR	1/occurrence	Grab
Mercury	-------	-------	-------	RR	1/occurrence	Grab
Zinc	-------	-------	-------	RR	1/occurrence	Grab
Manganese	-------	-------	-------	RR	1/occurrence	Grab
Nickel	-------	-------	-------	RR	1/occurrence	Grab
Aluminum	-------	-------	-------	RR	1/occurrence	Grab
Nitrates	-------	-------	-------	RR	1/occurrence	Grab
Uranium	-------	-------	-------	RR	1/occurrence	Grab

2. The flow rate is approximately 0.53 MDGD Average, 1 MGD Maximum.
3. RR - Record Results
4. Receiving water: Ditch to Outfall F-008, then to unnamed tributary of Four Mile Creek
5. The pH shall not be less than RR standard units nor greater than RR standard units and shall be monitored once per occurrence by grab sample.
6. There shall be no discharge of floating solids or visible foam in other than trace amounts; nor, shall the effluent cause a visible sheen on the receiving waters.
7. Samples taken in compliance with the monitoring requirements specified above shall be taken at the following locations(s): at or near the outfall, but prior to mixing with other waters of the ditch

MODIFICATION DATE_____ _____

Bureau of Water Pollution Control

A. EFFLUENT LIMITATIONS AND MONITORING REQUIREMENTS

1. During period beginning on the effective date of this permit and lasting through the expiration date the permittee is authorized to discharge from outfall(s) serial number(s) H-018; cooling water retention basin effluent.

   Such discharge shall be limited and monitored by the permittee as specified below:

Effluent Characteristics	Discharge Limitations				Monitoring Requirements	
	kg/day Daily Avg.	lbs/day Daily Max.	Other Units (Specify Daily Avg.	Daily Max	Measurement Frequency	Sample Type
Flow-m^3/day (MGD)	-------	-------	-------	RR	1/occurrence	Estimate
Total Suspended Solids	-------	-------	-------	RR	1/occurrence	Grab
Ammonia	-------	-------	-------	RR	1/occurrence	Grab
Chromium	-------	-------	-------	RR	1/occurrence	Grab
Copper	-------	-------	-------	RR	1/occurrence	Grab
Lead	-------	-------	-------	RR	1/occurrence	Grab
Mercury	-------	-------	-------	RR	1/occurrence	Grab
Zinc	-------	-------	-------	RR	1/occurrence	Grab
Manganese	-------	-------	-------	RR	1/occurrence	Grab
Nickel	-------	-------	-------	RR	1/occurrence	Grab
Aluminum	-------	-------	-------	RR	1/occurrence	Grab
Nitrates	-------	-------	-------	RR	1/occurrence	Grab
Uranium	-------	-------	-------	RR	1/occurrence	Grab

2. The flow rate is approximately 0.53 MDGD Average, 1 MGD Maximum.
3. RR - Record Results
4. Receiving water: Ditch to Outfall F-008, then to unnamed tributary of Four Mile Creek
5. The pH shall not be less than RR standard units nor greater than RR standard units and shall be monitored once per occurrence by grab sample.
6. There shall be no discharge of floating solids or visible foam in other than trace amounts; nor, shall the effluent cause a visible sheen on the receiving waters.
7. Samples taken in compliance with the monitoring requirements specified above shall be taken at the following locations(s): at or near the outfall, but prior to mixing with other waters of the ditch

OSR 3-4A-W (Rev1-89)

W-0517

WESTINGHOUSE SAVANNAH RIVER COMPANY

INTER-OFFICE MEMORANDUM

ESH-FSS-93-0072

January 29, 1993

TO: K. S. WIERZBICKI, 742-6G

FROM: C R Hayes for WDD
W. D. DUNAWAY, 703-18A
(X5-5754)

PATH FORWARD FOR OBTAINING THE WASTEWATER PERMIT TO OPERATE THE F/H HIGH LEVEL WASTE TANK FARMS (U)

Attached is a list of items required to be complete in order to receive the wastewater permit-to-operate for the F/H Tank Farm Facilities. Upon completion of these required items, please contact Chuck Hayes (5-8838) to schedule an EPD pre-final inspection. EPD requires the same level of readiness for the pre-final as SCDHEC requires for the final inspection. After any deficiencies noted during the pre-final inspection are corrected, SCDHEC will be scheduled to perform a final inspection. The system will not be considered approved until the operating permit is received from SCDHEC.

In addition to the stated items, several factors are worth mentioning. First, it is important to have general housekeeping at a premium when the State is on the Site. Second, I suggest the number of personnel attending the inspection be kept at a minimum. This is preferred so as to keep SCDHEC from being overwhelmed while performing their job.

Please be aware that generally, SCDHEC requires a one week notice to schedule a final inspection.

As you are aware, the Tank Farm Facilities will remain under RCRA interim status until the permit-to-operate is issued. Therefore, all regulatory/permitting issues relative to operations during this period will continue to be handled under the RCRA "umbrella".

This guidance is being provided to you in an effort to help facilitate the permitting process and also to prevent important issues from "slipping through the cracks". If there are any questions concerning this guidance or the process in general, please do not hesitate to contact me or Mr. Hayes. We are committed to assisting in ensuring that this process advances in the optimum manner.

CRH:pr
Attachment

CC: w/ attachment
J. D. Arnett, 703-41A
C. Blair-McManus, 703-H
J. E. Bolen, 703-41A
S. J. Carroll, 742-A
S. S. Cathey, 703-H
L. S. Coward, 703-18A
B. Damani, 704-15S
H. L. Davis, 703-41A
A. R. Gough, 992-3W
C. R. Hayes, 703-18A
M. Hawkins, 742-A
M. A. Hunter, 742-6G
J. L. Keyes, 742-A
B. L. Lewis, 703-H
W. J. Maloney, 742-A
J. V. Odum, 742-A
W. L. Payne, 742-A
R. L. Peterson, 703-41A
J. S. Roberts, 742-A
R. M. Satterfield, 719-4A
C. B. Stevens, 742-6G
K. Z. Wolf, 704-15S
G. T. Wright, 703-H
Records Administration, 773-52A
EPD Fileroom, 742-A

F/H HIGH LEVEL TANK FARMS
ITEMS NECESSARY FOR FINAL INSPECTION
(RECEIPT OF PERMIT-TO-OPERATE)

- PROFESSIONAL ENGINEER CERTIFICATION FOR THE FOLLOWING:

  - 10 DRAWINGS THAT WERE ORIGINALLY INCLUDED IN THE PERMIT APPLICATION PACKAGE:

    - Figures 2-3 thru 2-5 (blueprints)
    - Figures 4-24 (W2017868) and 4-25 (W2017867)
    - Figures 7-1 (W2020288), 7-4 (W2020290), 7-5 (W2020289) and 7-7 (W2020291)

  - LETTER OF CERTIFICATION FOR NEW WASTE TRANSFER FACILITY (INCL. NECESSARY AS-BUILT DRAWINGS)

  - LETTER OF CERTIFICATION FOR H - S TRANSFER LINE (INCL. NECESSARY AS-BUILT DRAWINGS AND PRESSURE / LEAKAGE TEST RESULTS)

** SEE APPENDIX DD OF SRS "HOW" MANUAL FOR BLANK LETTER OF CERTIFICATION **

  - IN-TANK PRECIPITATION FACILITY (SCDHEC HAS INDICATED THAT THEY WILL ACCEPT A REPRINT OF THE CERTIFICATION PROVIDED IN THE PERMIT APPLICATION)

- THE EQUIVALENT OF AN OPERATIONS AND MAINTENANCE MANUAL (I.E. PROCEDURES AND DRAWINGS)

- 3 OPERATOR - IN - CHARGE LOGBOOKS-ONE IN ITP CONTROL ROOM, ONE IN F-TANK FARM CONTROL ROOM AND ONE IN H-TANK FARM CONTROL ROOM

- SIGNED OPERATOR - IN - CHARGE DESIGNATION FORM (SEE APPENDIX CC OF SRS "HOW" MANUAL FOR BLANK O-I-C FORM)

- UPDATED BEST MANAGEMENT PRACTICE (BMP) OR SPILL PREVENTION CONTROL AND COUNTERMEASURES (SPCC) PLAN

- UPDATED CONTINGENCY PLAN / EMERGENCY PROCEDURES

- PROCEDURES AND/OR SPECIFICATIONS FOLLOWED DURING INSTALLATION OF THE LINER EXTENSION WITHIN THE ITP HOLD TANK AREA

INTER-OFFICE MEMORANDUM
Savannah River Site

Date: 29-Jan-1993 12:10pm EST
From: Bill Payne
PAYNE-WL-Y7708
Dept: EPD/ESH&QA
Tel No: 59002

TO: See Below

Subject: RECORD KEEPING FOR TANK FARM WWTP (U)

Per your request regarding record keeping for the Tank Farm WWT Facilities, EPD offers the following guidance:

* Environmental regulations require that records be kept at least 3 years

* SRS policy requires that environmental records be kept indefinitely

* Environmental records should be quickly accessible in the event of an audit by the regulator

Taking all of this into account, records may be kept in Augusta as long as they are quickly retrievable (in a few hours). Additionally, records of the most recent events should be kept at the facility in fire proof cabinets. These records include log books, rounds forms, checklists, laboratory data, process data, and any other information that is generated regarding operation of the permitted wastewater treatment facility.

Distribution:

TO:	Douglas M. Blue	(BLUE-DM-L4808 @A1@SRXSS2)
CC:	Lori S. Coward	(COWARD-LS-Z6459)
CC:	Chuck Hayes	(HAYES-CR-Z9722)
CC:	Randall W. Weigel	(WEIGEL-RW-Y8299)
CC:	Keith W. Dyer	(DYER-KW-O9422)
CC:	JOHN L. KEYES	(KEYES-JL-O8263)

INTER-OFFICE MEMORANDUM
Savannah River Site

Date: 25-Jan-1993 06:13pm EST
From: Matthew A. Hunter
HUNTER-MA-L2335 AT A1 AT SASRS2
Dept: WMRC
Tel No: 557-0520/bp#6761

TO: See Below

Subject: Update of Action Items for TFWWP/FFA

The following is a revised listing of the actions associated with preparation/compliance with the Tank Farm Wastewater Permit (TFWWP) and the Federal Facility Agreement (FFA). This list includes responsible parties and target completion dates for each actions. The list will be updated on a weekly basis and will include a status line where applicable. Several action items have been added to the list following a meeting of Waste Mangement Regulatory Program's staff. Waste Management Solid Waste personnel have been included on distribution in order to allow tracking of issues associated with the reporting requirements under CERCLA implemented via the FFA.

Wastewater Permit

1.a Comment on draft construction permit.
Responsible party: All
Completion Date: Complete

1.b Negotiate final special conditions.
Responsible party: WMRC
Completion Date: With Permit

2.a Develop a three phase schedule for operator training to acheive full compliance with South Carolina Environmental Certification Board regulations.
Responsible party: Walter Wilson
Completion Date: Complete

2.b Acceptance by EPD as fulfilling SCECB regulations.
Responsible party: WMRC
Completion Date: Complete
Status: Accepted with stipulations.

WLP|CRH

2.c Ensure WMO is capable of meeting stipulations.
Responsible party: WMO (WAW)
Completion Date: 1/28
Status: WMRC is pursuing with WMO.

3.a Propose revisions to WM Tech Review to ensure that all modifications that will effect the description in the wastewater permit application or will change the integrity description in the tank assessment will be recognized and caught. (This will trigger any required PE certifications per the FFA.[Condition 5])
Responsible party: WMRC (MAH & MJH)
Completion Date: 1/29

3.b Train HLWE Engineers on new WM Tech Review procedures.
Responsible party: WMRC
Completion Date: Once revised procedure is issued.

4.a Issue guidance on contents of Operation and Maintenance manual and Operator in Charge Logbook. (Condition 1)
Responsible party: WMRC (MAH)
Completion Date: 1/28
Status: Memo is in WMRC approval process. WLP|CRH

4.b Write O&M procedure to be added to WMO procedure files.
Responsible party: WMO
Completion Date: 2/19

4.c Implement O&M manual.
Responsible party: WMO
Completion Date: 2/19

5. Review Best Management Practice plan to ensure DOE is in concurrence. (Condition 3)
Responsible party: WMRC (DMB) WLP|PCC|CRH
Completion Date: 2/10

6. Draft memo for withdrawal of Tank Farms from RCRA Part A application. (Condition 10)
Responsible party: WMRC (DMB) WJM
Completion Date: 2/10

7. Propose pathforward for matrix for usable chemicals in the tank farms that will not alter the composition of the ETF effluent. (Condition 4)
Responsible party: WMRC & HLWE (AWW, MAH, KNU & DMB)
Completion Date: 2/19

8. Ensure that wastewater records can be retained off-site and that retreival will be sufficient to meet regulator's requirements. (Condition 2)
Responsible party: WMRC (DMB) WLP|CRH
Completion Date: 2/3

9. Obtain services of Professional Engineer to stamp prints requested by DHEC.
Responsible party: WMRC (MAH & CBS) CRH
Completion Date: 1/27

10. Invite DHEC for Final Inspection.
Responsible party: WMRC (MAH) CRH
Completion Date: 2/8

11. Package all changes to application for transmittal to DHEC (including 2F)
Responsible party: WMRC/HLWE(DMB & JEG) CRH
Completion Date: 2/3

12. Issue guidance for what will require permit modifications and how to make modification. (Condition 7)
Responsible party: WMRC (MAH & DMB) CRH
Completion Date: 2/8

13. PE certification for ITP, NWTF & H/S IAL for final inspection. CRH

Responsible party: WMRC (MAH)
Completion Date: With Final Inspection

14. Prepare QA/QC package for ITP liner extension.(Condition 8) CRH
Responsible party: WMRC (DMB & TPG)
Completion Date: 2/1

15. Revise Contingency Plan to delete RCRA references.(Condition 9) CRH
Responsible party: WMRC (MAH)
Completion Date: 2/3

16. Review RHLWE schedule w/ DOE to confirm an approved schedule for submittal to DHEC. (Condition 7) CRH
Responsible party: WMRC
Completion Date: 2/10

17. Submit modification to Waste Transfer Procedure (241-FH-7TQ) to prohibit additions to tanks that have leaked. (Condition 7)
Responsible party: WMRC
Completion Date: 2/10

Federal Facility Agreement

1. Meet with Gary Abel to discuss services of a Professional Engineer for certification of modifications to secondary containment.
Responsible party: WMRC (MAH & CBS)
Completion Date: 1/28

2.a Review WM Response to Leaks procedure for adequacy.
Responsible party: WMRC/WMO/HLWE
Completion Date: Pending WMRP/EPD Meeting

2.b Propose revisions to leak procedures to ensure compliance.
Responsible party: WMRC
Completion Date: Pending WMRP/EPD Meeting

3. Develop Logic Diagram for the responses for leaks.
Responsible party: WMRC (DMB & RSM)
Completion Date: 2/15

4. Review WM SIRIM procedures and recommend any revisions required.
Responsible party: WMRC (MAH & MJH)
Completion Date: 2/4

5. Submit Waste Removal Schedule to DHEC. CRH Annual Reports?
Responsible party: HWLE (MJM)
Completion Date: 90 Days from effecive date of FFA

6. Identify and map all known spill sites with annual updates (first draft).
Responsible party: WMRC (EBD)
Completion Date: 2/28

Distribution:

TO: CARY B. STEVENS (STEVENS-CB-05981 AT A1 AT SASRS2)

CC: D T BIGNELL (BIGNELL-DT-05579 @A1@SLSRP1)
CC: Mark J. Mahoney (MAHONEY-MJ-05457 AT A1 AT SASRS2)

11

CC:	Marcia B. Birk	(BIRK-MB-Y9793 AT A1 AT SASRS2)
CC:	Steven M. Mertz	(MERTZ-SM-A9202 AT A1 AT SASRS2)
CC:	Douglas M. Blue	(BLUE-DM-L4808 @A1@SRXSS2)
CC:	Robert S. Murphy	(MURPHY-RS-B9654 AT A1 AT SASRS2)
CC:	Michael J. Hagenbarth	(HAGENBARTH-MJ-L2326 AT A1 AT SASRS2)
CC:	Kester Uzochukwu	(UZOCHUKWU-K-L1224 AT A1 AT SASRS2)
CC:	Johnna E. Griffiths	(GRIFFITHS-JE-Y5542 AT A1 AT SASRS2)
CC:	Gerry F. Stejskal	(STEJSKAL-GF-Y6594 @A1@SLSRP1)
CC:	Chuck Hayes	(HAYES-CR-Z9722 @A1@SLSRP1)
CC:	Carrie A. Amacher	(AMACHER-CA-C9103 @A1@SLSRP1)
CC:	W. DANNY DUNAWAY	(DUNAWAY-WD-O7436 @A1@SLSRP1)
CC:	John W. Cook	(COOK-JW-O9823 @A1@SLSRP1)
CC:	Luke T. Reid	(REID-LT-O8559 @A1@SLSRP1)
CC:	Joette G. Sonnenberg	(SONNENBERG-JG-O5770 AT A1 AT SASRS2)
CC:	L.C. Thomas	(THOMAS-LC-O5194 AT A1 AT SASRS2)
CC:	Richard C. Shank	(SHANK-RC-Z8546 @A1@SLSRP1)
CC:	WALTER A. WILSON	(WILSON-WA-O5215 @A1@SLSRP1)
CC:	Thomas B. Caldwell	(CALDWELL-TB-Y6683 AT A1 AT SASRS2)
CC:	Mario A. Ceravolo, 703-H	(CERAVOLO-MA-O7495 AT A1 AT SASRS2)
CC:	Arthur W. Wiggins, Jr.	(WIGGINS-AW-O6172 AT A1 AT SASRS2)
CC:	Kim S. Wierzbicki	(WIERZBICKI-KS-O6535 AT A1 AT SASRS2)
CC:	Mark S. Peters	(PETERS-MS-O5010 AT A1 AT SASRS2)
CC:	Brenda L. Lewis	(LEWIS-BL-O6503 AT A1 AT SASRS2)
CC:	Arthur S. Greer	(GREER-AS-Y6907 AT A1 AT SASRS2)
CC:	Chris J. Baker	(BAKER-CJ-B4996 @A1@SRXSS2)
CC:	V.G. Dickert	(DICKERT-VG-O4857 AT A1 AT SASRS2)
CC:	Robert W. Wilson	(WILSON-RW-T4847 AT A1 AT SASRS2)
CC:	Roger K. Roosa	(ROOSA-RK-L4532 AT A1 AT SASRS2)
CC:	TOM MONAHON	(MONAHON-TM-O4411 @A1@SRXSS2)
CC:	W. Brent Boore	(BOORE-WB-O6688 AT A1 AT SASRS2)
CC:	Rod M. Satterfield	(SATTERFIELD-RM-T3212 @A1@SLSRP1)
CC:	Joseph V. Cioffi	(CIOFFI-JV-B4664 @A1@SLSRP1)
CC:	Dot Matthews	(MATTHEWS-DL-W0643 AT A1 AT SASRS2)
CC:	Ginny Ellis	(ELLIS-VE-W0928 AT A1 AT SASRS2)
CC:	Frederick F. Cadek	(CADEK-FF-Y5022 @A1@SLSRP1)
CC:	Margaret G. Schwenker	(SCHWENKER-MG-B7657 @A1@SASRS3)
C:	Cynthia Blair-McManus	(BLAIR_MCMANUS-C-B8534 @A1@SASRS3)

OSR 2, 5A-W (Rev1-89)

W-0517

WESTINGHOUSE SAVANNAH RIVER COMPANY

INTER-OFFICE MEMORANDUM

ESH-FSS-93-0020

January 25, 1993

TO: M. A. HUNTER, 742-6G

C R Hayes

FROM: C. R. HAYES, 703-18A
(X5-8838)

SCDHEC "AS-BUILT" CONSTRUCTION PERMIT #17,424-IW; F AND H-AREA HIGH-LEVEL RADIOACTIVE WASTE TANK FARMS (U)

Attached is a copy of SCDHEC Construction Permit #17,424-IW for the subject facilities. Also, attached is an EPD Procedure Control Form which outlines procedures to be followed to ensure compliance with SCDHEC requirements for this permit. As the Permit Custodian for these facilities, it is your responsibility to ensure that these procedures are followed.

The facilities have been classified in Group IV - P/C, requiring a certified operator holding a Grade A - P/C certificate.

Please notice the twelve (12) Special Conditions included in the permit. With regard to Special Conditions #1-3 and #9, documentation must be made available to SCDHEC at the final inspection. Special Condition #8 requires the submittal of procedures used during installation of the liner extension within the ITP hold tank area by 3/26/93. Please provide this information to me no later than 3/5/93. Also, note that construction of the 242-25H Evaporator must be completed prior to 1/1/98. Any 242-25H schedule changes must be approved by DHEC. If there are any concerns with any of these conditions, please contact me.

Also, please remember the ten drawings in the permit application package that must be PE-stamped and signed before the permit-to-operate can be issued.

As you know, the facilities may continue to operate under RCRA Interim Status until a wastewater permit-to-operate is received from DHEC. However, at no time may the In-Tank Precipitation Facility undergo "hot" operations until the permit-to-operate is received.

Please contact me if there are any questions.

CRH:pr
Attachment

CC: w/ attachment
P. C. Carroll, 742-A
S. J. Carroll, 742-A
S. S. Cathey, 703-H
J. W. Cook, 742-A
L. S. Coward, 703-18A
P. D. d'Entremont, 703-H
M. D. Dukes, 742-A
W. D. Dunaway, 703-18A
T. P. Gaughan, 241-152-H
A. R. Gough, 992-3W
M. Hawkins, 742-A
J. L. Keyes, 742-A
B. L. Lewis, 703-H
W. J. Maloney, 742-A
J. V. Odum, 742-A
J. A. Pike, 703-H
J. S. Roberts, 742-A
R. M. Satterfield, 719-4A
G. F. Stejskal, 742-A
C. B. Stevens, 742-6G
K. S. Wierzbicki, 742-6G
K. Z. Wolf, 704-15S
G. T. Wright, 241-120H
Records Administration, 773-52A
EPD Fileroom, 742-A

WASTEWATER PERMIT PROCEDURES

---

1. At no time may the ITP facility be placed into "hot"operation until receiving the final SCDHEC operating approval.

2. Any proposed changes to the facilities must be pre-approved by SCDHEC.

3. Upon compliance with necessary administrative requirements (permit conditions, etc.), notify EPD to schedule a final inspection. EPD will conduct a pre-final inspection prior to SCDHEC's final inspection. Refer to the "HOW" Manual [WSRC-IM-91-69] for instructions.

South Carolina
DHEC
Department of Health and Environmental Control
2600 Bull Street, Columbia, SC 29201

Interim Commissioner: Thomas E. Brown, Jr.

Board: John H. Burriss, Chairman
Richard E. Jabbour, DDS, Vice Chairman
Robert J. Stripling, Jr. Secretary

William E. Applegate, III,
Toney Graham, Jr., MD
Sandra J. Molander
John B. Pate, MD

Promoting Health, Protecting the Environment

January 25, 1993

Mr. W.D. Dunaway, Manager
Permitting Field Support Group
Environmental Protection Department
Westinghouse Savannah River Co.
P.O. Box 616
Aiken, SC

Re: Construction Permit #17,424-IW
SRS F/H-Area
Aiken and Barnwell County

Dear Sir:

Enclosed is a State Construction Permit for the above-referenced wastewater treatment facility. The conditions of the permit are explicitly stated: construction is to be performed in accordance with this permit and the supporting engineering report, plans and specifications approved by this Office.

Your EQC District contact from this Department is Myra Reece (address below). She should be notified when construction has begun and when the facility is ready for operation. A permit to operate must be issued before the permitted facility is placed in operation. At the time you request an operating permit you must submit a letter to our District Office from the Registered Engineer who signed Item X on the Application for Permit to Construct. The Engineer should certify that the construction has been completed in accordance with the approved plans and specifications. At the discretion of the Department, a final inspection may be required prior to operating permit issuance.

In accordance with State Law, your facility will be required to have an operator-in-charge who has been certified by the SC Environmental Certification Board. Your facility has been classified in Group IV-P/C, necessitating an operator holding a Grade A-P/C or higher certificate. You will not be given permission to operate your facility until a properly qualified operator(s) has been obtained. Questions in this matter should be directed to William R. Moore, SC Environmental Certification Board, 2221 Devine Street, Suite 320, Columbia, SC 29205.

Sincerely,

Marion F. Sadler, Jr., Acting Director
Industrial & Agricultural
Wastewater Division

Address of District Contact:
218 Beaufort Street, NE
Aiken, S.C. 29801

MFS/LEA

cc: Myra Reece, Lower Savannah EQC

recycled paper

4

South Carolina
DHEC
Department of Health and Environmental Control
2600 Bull Street
Columbia, SC 29201

Bureau of Water Pollution Control
Permit To Construct

F/H-Area

Permission is hereby granted to: Westinghouse Savannah River Co.
P.O. Box 616
Aiken, S.C.

for the construction of a wastewater treatment system in accordance with the construction plans, specifications, engineering report and Construction Permit Application signed by Richard L. Stegen, Ihor John Nyszczot, Richard Kowalski and John William Nelson, Registered Professional Engineers, S. C. Registration Numbers: 12633, 10901, 14077, and 4448 respectively.

Project Name: F and H-Area High-Level Radioactive Waste Tank Farms **County:** Aiken & Barnwell

Project Description: The description of the F/H Area High-Level Radioactive Tank Farm is located on page 2 of this permit.

The wastewater generated at this facility will be sent to the F/H ETF, precipitate slurry and sludge will be sent to the DWPF, and decontaminated salt solution will be sent to the Z-Area Saltstone Manufacturing and Disposal Facility.

There is no direct discharge from this facility.

The effluent concentrations of those constituents the wastewater treatment system is designed to remove or reduce are as required by the receiving facilities.

Treatment System Classification: Group IV-PC.

Special Conditions: The special conditions applicable to the F/H Area High-Level Radioactive Tank Farm are located on page 3 and 4 of this permit.

Permit Number: 17,424-IW **Date of Issue:** January 25, 1993

Expiration Dates: Unless construction begins prior to January 25, 1994 and construction is completed prior to January 1, 1998 this permit will expire.

In accepting this permit, the owner agrees to the admission of properly authorized persons at all reasonable hours for the purpose of sampling and inspection.

THIS IS A PERMIT FOR CONSTRUCTION ONLY AND DOES NOT CONSTITUTE STATE DEPARTMENT OF HEALTH AND ENVIRONMENTAL CONTROL APPROVAL, TEMPORARY OR OTHERWISE, TO PLACE THIS SYSTEM IN OPERATION.

Marion Blackley
Bureau of Water Pollution Control

Project Description

The construction of two wastewater storage and treatment facilities and associated transfer systems, one in F-Area the other in H-Area, designed to treat wastewater generated at the F-Area Separations Facility, H-Area Separations Facility, Equipment Decontamination/Repair Facility, F/H Effluent Treatment Facility, Defense Waste Processing Facility, Receiving Basin for Offsite Fuels and Resin Regeneration Facility, and SRL Laboratory. The treatment facilities will also receive reactor filter backwash, incidental wastes, and process chemicals.

The F-Area facility consists of the following equipment:

1. 22 tanks, eight (8) of which are 750,000 gal Type I tanks (numbers 1-8), ten (10) 1,300,000 gal Type III/IIIA tanks (numbers 25-28, 33-34, and 44-47), and four (4) 1,300,000 gal Type IV tanks (numbers 17-20).
2. Two evaporator systems (242-F and 242-16F) each of which consists of an evaporator, condenser, mercury collection tank, cesium removal pump tank and column, overheads hold tanks, and overheads diverting tank (242-F only). The 242-F evaporator system also contains a waste concentrate transfer system.
3. Six (6) diversion boxes (FDB1, FDB2, FDB3, FDB4, FDB5, FDB6)
4. Three (3) pump pits (FPP1, FPP2, FPP3)
5. Associated tanks, pumps, and piping.

The H-Area facility consists of the following equipment:

1. 27 tanks, four (4) of which are 750,000 gal Type I tanks (numbers 9-12), three (3) are 1,030,000 gal Type II tanks (numbers 13-15), sixteen (16) 1,300,000 gal Type III/IIIA tanks (numbers 29-32, 35-43, 48, 49, and 51), and four (4) 1,300,000 gal Type IV tanks (numbers 21-24).
2. Three (3) evaporator systems (242-H, 242-16H, and 242-25H) each of which consists of an evaporator, condenser, mercury collection tank, cesium removal pump tank and column, and overheads hold tanks. The 242-H evaporator system also contains a waste concentrate transfer system.
3. Eight (8) diversion boxes (HDB1, HDB2, HDB3, HDB4, HDB5, HDB6, HDB7, HDB8)
4. Ten (10) pump pits (HPP1, HPP2, HPP3, HPP4, HPP5, HPP6, HPP7, HPP8, HPP9, HPP10)
5. In-Tank Precipitation Process consisting of:
   a. Two (2) Cross flow filters
   b. One (1) precipitate stripper column
   c. One (1) wash stripper column
   d. Two (2) hold tanks
6. Associated tanks, pumps, and piping.

This permit also includes the transfer line between the F-Area and H-Area facilities, the line between the H-Area facility and the DWPF, and the pump pits (APP and LPPP) associated with the line from H-Area to the DWPF including all associated pumps and tanks.

SPECIAL CONDITIONS

1. The permittee shall maintain at each permitted facility a complete Operations and Maintenance Manual for the waste treatment system. The manual shall be made available for on-site review during normal working hours. The manual shall contain operation and maintenance instructions for all equipment and appurtenances associated with the waste treatment system. The manual shall contain a general description of the treatment process(es), operating characteristics that will produce maximum treatment efficiency and corrective action to be taken should operating difficulties be encountered.

2. The permittee shall provide for the performance of routine daily treatment plant inspections by a certified operator of the appropriate grade. The inspections shall include, but are not limited to, areas which require a visual observation to determine efficient operations and for which immediate corrective measures can be taken using the O & M manual as a guide. All inspections shall be recorded and shall include the date, time and name of person making the inspection, corrective measures taken, and routine equipment maintenance, repair, or replacement performed. The permittee shall maintain all records of inspections at the permitted facility and the records shall be made available for on-site review during normal working hours.

3. The permittee shall develop and implement a Best Management Practices (BMP) plan to identify and control the discharge of significant amounts of oils and the hazardous and toxic substances listed in 40 CFR Part 117 and Tables II and III of Appendix D to 40 CFR Part 122. The plan shall include a listing of all potential sources of spills or leaks of these materials, a method for containment, a description of training, inspection and security procedures, and emergency response measures to be taken in the event of a discharge to surface waters or plans and/or procedures which constitute an equivalent BMP. Sources of such discharges may include materials storage areas; in-plant transfer, process and material handling areas; loading and unloading operations; plant site runoff; and sludge and waste disposal areas. The BMP plan shall be developed, and updated as necessary, in accordance with good engineering practices, shall be documented in narrative form, and shall include any necessary plot plans, drawings, or maps. The BMP plan shall be developed no later than six months after issuance of the final permit (or modification), shall be implemented no later than one year after issuance of the final permit (or modification). A Spill Prevention Control and Countermeasure (SPCC) plan may be used in lieu of a BMP plan if BMP requirements are satisfied. The BMP plan or its equivalent shall be maintained at the plant site and shall be available for inspection by EPA and Department personnel.

4. No chemicals (process or otherwise) shall be added to the waste tanks which will alter the composition of the F/H ETF effluent from that which was evaluated for the NPDES permit.

5. The addition (not replacement) of new piping and chemical feed systems, even though related to the F/H Tank Farm process, shall not be considered normal operation if the piping and/or feed systems are to be located outside the tank farm boundary.

6. Once waste removal begins on a tank with a leak or crack and the waste is removed to a level below the lowest known leak or crack, that level shall become the maximum operating level of the tank and shall not be exceeded unless the exceedance is a temporary result of the waste removal process.

7. No tank that leaks or has leaked shall be used for waste receipt without prior approval from this Department. This condition does not apply to the necessary addition of waste for waste removal purposes. Also, this condition does not apply to the use of tank 13, the 242-H evaporator feed tank, provided the construction and utilization of the replacement evaporator, 242-25H, and it's associated feed tank do not deviate significantly from the State approved schedule. Any schedule changes must be approved by this office.

8. Within 60 days from the effective date of this permit the Permittee shall submit to this office a report containing the QA/QC procedures followed during the installation of the liner extension within the ITP hold tank area.

9. The Permittee shall maintain contingency plans or emergency procedures in place to respond to any known emergency situation with the potential to negatively impact human health or the environment. The plans and/or procedures shall be updated as necessary to include new information or changing conditions.

10. On June 30, 1987 the permittee submitted a revised RCRA Part A permit application which included the high-level radioactive waste tank system(s) contained in this permit. After this office issues the wastewater construction and operating permits for this facility, the permittee should amend its RCRA Part A permit to delete the tank system(s).

11. Based on a review of the Tank Assessment Report, submitted as a requirement of the Federal Facilities Agreement (FFA), Section IX, this office has determined that the Type I tanks identified as tanks 2-8 are approvable as equivalent devices for secondary containment. The Type I tanks, however, should only be used for waste receipt when there is no suitably available volume in an approved Type III tank. Furthermore, if any Type I tank develops a leak which exceeds the capacity of the 5-foot deep secondary containment pan, this approval shall be rescinded and no additional waste shall be directed to these Type I tanks.

12. This permit is being issued after review and approval of a construction permit application submitted to the State of South Carolina pursuant to the requirements of a Federal Facilities Agreement (FFA) entered into by the United States Department of Energy (the permittee), the United States Environmental Protection Agency, and The State of South Carolina on January 15, 1993. In addition to the conditions specifically stated in this permit, the permittee shall be subject to all applicable requirements of Section IX, including referenced appendices, of the FFA.

WESTINGHOUSE SAVANNAH RIVER COMPANY

INTER-OFFICE MEMORANDUM

January 25, 1993

WER-HLE-930201

To: Distribution

From: M. P. Reimnitz, 703-H
(x7-1447)

Reference:
1) Letter, W. D. Dunaway to L. E. Arrington, SCDHEC, "Phase II Tank Assessment Report for the F and H-Area High Level Radioactive Waste Tank Farms (U)", ESH-FSS-92-0811, dated November 30, 1992.
2) Memorandum, P. W. Schuetz to M. P. Reimnitz, "Tank 21, 22, and 23 Transfer Line Leak Detection Study (U)", 92-016337, dated 12/2/92.

Tank 21, 22, 23/HDB-5 Transfer Lines Leak Detection
1/12/93 Meeting Minutes (U)

A meeting was held to discuss the path forward for the transfer lines between Tanks 21-23 and HDB-5. In the reference 1 letter, these three transfer lines were identified as not possessing adequate leak detection. WSRC committed to further evaluate these lines and determine the need for repairing/modifying.

These lines are required to remain in service for several years to facilitate utilizing these tanks as RBOF, ESP and ITP wash water storage tanks. It was agreed that leak detection is required in order to be in compliance with the FFA and Waste Water Permit.

Design Engineering completed a study to provide conceptual design, order of magnitude cost estimates and schedules to provide jacket leak detection and pressure testability for these lines (Reference 2). Upon review of this, it was recommended that the jackets should be made pressure testable also. The additional cost for the pressure test capability when compared to the leak detections is small.

The following action items were assigned:

1) Review conceptual design and provide comments to Design Engineering. Action - M. J. Rea/M. P. Reimnitz.

2) Initiate change request to include the modifications into project scopes.
   a) Initiate change request to include Tank 21 and 23 in scope of project S-2081, Waste Removal. Action - M. P. Reimnitz
   b) Notify ITP personnel to include Tank 22 in scope of ITP project. Action - B. L. Lewis
   Note: B. L. Lewis notified P. H. Stevens. After further review with P. H. Stevens, R. A. Stokes and G. T. Wright, it was decided that all three tanks should be included in Project S-2081 scope. Subsequently, the change request for Project S-2081 will also include the Tank 22 transfer line mods. Action - M. P. Reimnitz

3) Notify and/or coordinate the path forward with SCDHEC. Action - C. R. Hayes

It is anticipated that SCDHEC will accept the path forward and that the lines can continue to be utilized as required until the lines are modified in accordance with schedule commitments which will be provided to SCDHEC.

MEMO, M. P. Reimnitz to Distribution, dated 1/25/93
WER-HLW-930201

2

Distribution: G. T. Wright, 241-120H
S. S. Cathey, 703-H
T. M. Monahon, 703-H
L. G. Frelin, 707-H
R. K. Roosa, 241-120H
P. H. Stevens, 241-120H
R. A. Alasin, 241-153H
R. W. Wilson, 703-H
K. F. Lesko, 703-H*
B. L. Lewis, 703-H*
K. S. Wierzbicki, 742-6G
D. J. Martin, 707-H
M. J. Mahoney, 707-H
C. B. Stevens, 742-6G*
M. A. Ceravolo, 703-H
M. J. Rea, 241-147H*
M. A. Hunter, 742-6G*
C. Hayes, 703-18A*
W. D. Dunaway, 703-18A

* Attended Meeting

South Carolina
DHEC
Department of Health and Environmental Control
2600 Bull Street, Columbia, SC 29201

Interim Commissioner: Thomas E. Brown, Jr.

Board: John H. Burriss, Chairman
Richard E. Jabbour, DDS, Vice Chairman
Robert J. Stripling, Jr. Secretary

William E. Applegate, III,
Toney Graham, Jr., MD
Sandra J. Molandor
John B. Pate, MD

Promoting Health, Protecting the Environment

January 25, 1993

Mr. W.D. Dunaway, Manager
Permitting Field Support Group
Environmental Protection Department
Westinghouse Savannah River Co.
P.O. Box 616
Aiken, SC

Re: Construction Permit #17,424-IW
SRS F/H-Area
Aiken and Barnwell County

Dear Sir:

Enclosed is a State Construction Permit for the above-referenced wastewater treatment facility. The conditions of the permit are explicitly stated: construction is to be performed in accordance with this permit and the supporting engineering report, plans and specifications approved by this Office.

Your EQC District contact from this Department is Myra Reece (address below). She should be notified when construction has begun and when the facility is ready for operation. A permit to operate must be issued before the permitted facility is placed in operation. At the time you request an operating permit you must submit a letter to our District Office from the Registered Engineer who signed Item X on the Application for Permit to Construct. The Engineer should certify that the construction has been completed in accordance with the approved plans and specifications. At the discretion of the Department, a final inspection may be required prior to operating permit issuance.

In accordance with State law, your facility will be required to have an operator-in-charge who has been certified by the SC Environmental Certification Board. Your facility has been classified in Group IV-P/C, necessitating an operator holding a Grade A-P/C or higher certificate. You will not be given permission to operate your facility until a properly qualified operator(s) has been obtained. Questions in this matter should be directed to William R. Moore, SC Environmental Certification Board, 2221 Devine Street, Suite 320, Columbia, SC 29205.

Sincerely,

Marion F. Sadler, Jr., Acting Director
Industrial & Agricultural
Wastewater Division

Address of District Contact:
218 Beaufort Street, NE
Aiken, S.C. 29801

MFS/LEA

cc: Myra Reece, Lower Savannah EQC

recycled paper

South Carolina
DHEC
Department of Health and Environmental Control
2600 Bull Street
Columbia, SC 29201

Bureau of Water Pollution Control
Permit To Construct

F/H-Area

Permission is hereby granted to: Westinghouse Savannah River Co.
P.O. Box 616
Aiken, S.C.

for the construction of a wastewater treatment system in accordance with the construction plans, specifications, engineering report and Construction Permit Application signed by Richard L. Stegen, Ihor John Nyszczot, Richard Kowalski and John William Nelson, Registered Professional Engineers, S. C. Registration Numbers: 12633, 10901, 14077, and 4448 respectively.

Project Name: F and H-Area High-Level Radioactive Waste Tank Farms County: Aiken & Barnwell

Project Description: The description of the F/H Area High-Level Radioactive Tank Farm is located on page 2 of this permit.

The wastewater generated at this facility will be sent to the F/H ETF, precipitate slurry and sludge will be sent to the DWPF, and decontaminated salt solution will be sent to the Z-Area Saltstone Manufacturing and Disposal Facility.

There is no direct discharge from this facility.

The effluent concentrations of those constituents the wastewater treatment system is designed to remove or reduce are as required by the receiving facilities.

Treatment System Classification: Group IV-PC.

Special Conditions: The special conditions applicable to the F/H Area High-Level Radioactive Tank Farm are located on page 3 and 4 of this permit.

Permit Number: 17,424-IW Date of Issue: January 25, 1993

Expiration Dates: Unless construction begins prior to January 25, 1994 and construction is completed prior to January 1, 1998 this permit will expire.

In accepting this permit, the owner agrees to the admission of properly authorized persons at all reasonable hours for the purpose of sampling and inspection.

THIS IS A PERMIT FOR CONSTRUCTION ONLY AND DOES NOT CONSTITUTE STATE DEPARTMENT OF HEALTH AND ENVIRONMENTAL CONTROL APPROVAL, TEMPORARY OR OTHERWISE, TO PLACE THIS SYSTEM IN OPERATION.

_____
Bureau of Water Pollution Control

Project Description

The construction of two wastewater storage and treatment facilities and associated transfer systems, one in F-Area the other in H-Area, designed to treat wastewater generated at the F-Area Separations Facility, H-Area Separations Facility, Equipment Decontamination/Repair Facility, F/H Effluent Treatment Facility, Defense Waste Processing Facility, Receiving Basin for Offsite Fuels and Resin Regeneration Facility, and SRL Laboratory. The treatment facilities will also receive reactor filter backwash, incidental wastes, and process chemicals.

The F-Area facility consists of the following equipment:

1. 22 tanks, eight (8) of which are 750,000 gal Type I tanks (numbers 1-8), ten (10) 1,300,000 gal Type III/IIIA tanks (numbers 25-28, 33-34, and 44-47), and four (4) 1,300,000 gal Type IV tanks (numbers 17-20).
2. Two evaporator systems (242-F and 242-16F) each of which consists of an evaporator, condenser, mercury collection tank, cesium removal pump tank and column, overheads hold tanks, and overheads diverting tank (242-F only). The 242-F evaporator system also contains a waste concentrate transfer system.
3. Six (6) diversion boxes (FDB1, FDB2, FDB3, FDB4, FDB5, FDB6)
4. Three (3) pump pits (FPP1, FPP2, FPP3)
5. Associated tanks, pumps, and piping.

The H-Area facility consists of the following equipment:

1. 27 tanks, four (4) of which are 750,000 gal Type I tanks (numbers 9-12), three (3) are 1,030,000 gal Type II tanks (numbers 13-15), sixteen (16) 1,300,000 gal Type III/IIIA tanks (numbers 29-32, 35-43, 48, 49, and 51), and four (4) 1,300,000 gal Type IV tanks (numbers 21-24).
2. Three (3) evaporator systems (242-H, 242-16H, and 242-25H) each of which consists of an evaporator, condenser, mercury collection tank, cesium removal pump tank and column, and overheads hold tanks. The 242-H evaporator system also contains a waste concentrate transfer system.
3. Eight (8) diversion boxes (HDB1, HDB2, HDB3, HDB4, HDB5, HDB6, HDB7, HDB8)
4. Ten (10) pump pits (HPP1, HPP2, HPP3, HPP4, HPP5, HPP6, HPP7, HPP8, HPP9, HPP10)
5. In-Tank Precipitation Process consisting of:
   a. Two (2) Cross flow filters
   b. One (1) precipitate stripper column
   c. One (1) wash stripper column
   d. Two (2) hold tanks
6. Associated tanks, pumps, and piping.

This permit also includes the transfer line between the F-Area and H-Area facilities, the line between the H-Area facility and the DWPF, and the pump pits (APP and LPPP) associated with the line from H-Area to the DWPF including all associated pumps and tanks.

4

SPECIAL CONDITIONS

1. The permittee shall maintain at each permitted facility a complete Operations and Maintenance Manual for the waste treatment system. The manual shall be made available for on-site review during normal working hours. The manual shall contain operation and maintenance instructions for all equipment and appurtenances associated with the waste treatment system. The manual shall contain a general description of the treatment process(es), operating characteristics that will produce maximum treatment efficiency and corrective action to be taken should operating difficulties be encountered.

2. The permittee shall provide for the performance of routine daily treatment plant inspections by a certified operator of the appropriate grade. The inspections shall include, but are not limited to, areas which require a visual observation to determine efficient operations and for which immediate corrective measures can be taken using the O & M manual as a guide. All inspections shall be recorded and shall include the date, time and name of person making the inspection, corrective measures taken, and routine equipment maintenance, repair, or replacement performed. The permittee shall maintain all records of inspections at the permitted facility and the records shall be made available for on-site review during normal working hours.

3. The permittee shall develop and implement a Best Management Practices (BMP) plan to identify and control the discharge of significant amounts of oils and the hazardous and toxic substances listed in 40 CFR Part 117 and Tables II and III of Appendix D to 40 CFR Part 122. The plan shall include a listing of all potential sources of spills or leaks of these materials, a method for containment, a description of training, inspection and security procedures, and emergency response measures to be taken in the event of a discharge to surface waters or plans and/or procedures which constitute an equivalent BMP. Sources of such discharges may include materials storage areas; in-plant transfer, process and material handling areas; loading and unloading operations; plant site runoff; and sludge and waste disposal areas. The BMP plan shall be developed, and updated as necessary, in accordance with good engineering practices, shall be documented in narrative form, and shall include any necessary plot plans, drawings, or maps. The BMP plan shall be developed no later than six months after issuance of the final permit (or modification), shall be implemented no later than one year after issuance of the final permit (or modification). A Spill Prevention Control and Countermeasure (SPCC) plan may be used in lieu of a BMP plan if BMP requirements are satisfied. The BMP plan or its equivalent shall be maintained at the plant site and shall be available for inspection by EPA and Department personnel.

4. No chemicals (process or otherwise) shall be added to the waste tanks which will alter the composition of the F/H ETF effluent from that which was evaluated for the NPDES permit.

5. The addition (not replacement) of new piping and chemical feed systems, even though related to the F/H Tank Farm process, shall not be considered normal operation if the piping and/or feed systems are to be located outside the tank farm boundary.

6. Once waste removal begins on a tank with a leak or crack, and the waste is removed to a level below the lowest known leak site, the permittee shall maintain the operating capacity of the tank at a point below the lowest known crack or leak site.

7. No tank that leaks or has leaked shall be used for waste receipt without prior approval from this Department. This condition does not apply to the necessary addition of waste for waste removal purposes. Also, this condition does not apply to the use of tank 13, the 242-H evaporator feed tank, provided the construction and utilization of the replacement evaporator, 242-25H, (and it's associated feed tank) remain on schedule.

8. Within 60 days from the effective date of this permit the Permittee shall submit to this office a report containing the QA/QC procedures followed during the installation of the liner extension within the ITP hold tank area.

9. The Permittee shall maintain contingency plans or emergency procedures in place to respond to any known emergency situation with the potential to negatively impact human health or the environment. The plans and/or procedures shall be updated as necessary to include new information or changing conditions.

10. On June 30, 1987 the permittee submitted a revised RCRA Part A permit application which included the high-level radioactive waste tank system(s) contained in this permit. After this office issues the wastewater construction and operating permits for this facility, the permittee should amend its RCRA Part A permit to delete the tank system(s).

11. Based on a review of the Tank Assessment Report, submitted as a requirement of the Federal Facilities Agreement (FFA), Section IX, this office has determined that the Type I tanks identified as tanks 2-8 are approvable as equivalent devices for secondary containment. The Type I tanks, however, should only be used for waste receipt when there is no available volume in an approved Type III tank. Furthermore, if any Type I tank develops a leak which exceeds the capacity of the 5-foot deep secondary containment pan, this approval shall be rescinded and no additional waste shall be directed to these Type I tanks.

12. This permit is being issued after review and approval of a construction permit application submitted to the State of South Carolina pursuant to the requirements of a Federal Facilities Agreement (FFA) entered into by the United States Department of Energy (the permittee), the United States Environmental Protection Agency, and The State of South Carolina on January 15, 1993. In addition to the conditions specifically stated in this permit, the permittee shall be subject to all applicable requirements of Section IX, including referenced appendices, of the FFA.

U

Classification

FAX Number 725-4943
703-A 1st Floor
A-Wing

U. S. DEPARTMENT OF ENERGY
SAVANNAH RIVER OPERATIONS OFFICE
AIKEN, SOUTH CAROLINA 29801

FACSIMILE SERVICES

DATE: 1/15/93

TO: LARRY ARRINGTON - SCDHEC 803-734-5216

FROM: CHUCK HAYES - WSEC 725-8838

2

Number of Pages

(Cover Page not Included)

COMMENTS:

PLS. CALL IF THERE ARE COMMENTS.

TX.

C. Hayes

U

CLASSIFICATION

F/H AREAS TANK FARM DRAFT WASTEWATER PERMIT COMMENTS (ASSUMING THE FFA IS SIGNED) 1/15/93

- **IN COVER LETTER AND PAGE 1 OF PERMIT** - PROJECT IS ✓ ACTUALLY LOCATED IN AIKEN AND BARNWELL COUNTIES

- **EXPIRATION DATES** - THE REPLACEMENT HIGH LEVEL WASTE ✓ EVAPORATOR WILL NOT BE COMPLETED UNTIL SOMETIME IN 1997

- **PROJECT DESCRIPTION**

  - WASTEWATERS FROM SRTC (FORMERLY SRL), REACTOR FILTER ✓ BACKWASH, AND INCIDENTAL WASTES AND PROCESS CHEMICALS, AS OUTLINED IN SECTION 5.1 OF THE PERMIT APPLICATION PACKAGE, SHOULD ALSO BE LISTED.

  - TYPE I TANK CAPACITY SHOULD BE 750, 000 GALLONS ✓

  - THE FOLLOWING SHOULD BE ADDED TO THE EQUIPMENT LIST:
    - A TRANSFER LINE BETWEEN THE F AREA AND H AREA ✓ FACILITIES
    - A TRANSFER LINE BETWEEN THE H-AREA FACILITY AND DWPF (S-AREA), INCLUDING TWO PUMP PITS (APP AND LPP) ✓

  - IT IS SUGGESTED THAT THE TANK NUMBERS BE INCLUDED IN THE ✓ DESCRIPTION

- **SPECIAL CONDITIONS**

  - CONDITION #6, #7 AND #S 13-25 SHOULD BE REMOVED WITH THE FFA ✓ BEING SIGNED

  - CONDITION #8 SHOULD BE CHANGED TO READ: THE PERMITTEE ✓ SHALL AT ALL TIMES MAINTAIN THE LIQUID LEVEL OF TANK 13 AT A POINT BELOW THE LOWEST KNOWN CRACK OR LEAK SITE.

3

- CONDITION #9 SHOULD BE CHANGED TO READ: NO TANK THAT LEAKS OR HAS LEAKED SHALL BE USED FOR WASTE RECEIPT, AS DEFINED IN SECTION 4.1 OF THE PERMIT APPLICATION PACKAGE, WITHOUT PRIOR APPROVAL FROM THIS DEPARTMENT. THIS IS NOT APPLICABLE TO TANK 13 OR THE ADDITION OF WASTE FOR WASTE REMOVAL PURPOSES.

- CONDITION #10 SHOULD REFER DIRECTLY TO EPOXY OR GROUT LINER EXTENSIONS WITHIN THE ITP HOLD TANK AREA

- **TANKS 2-8 EQUIVALENCY DETERMINATION** - THERE IS NO MENTION IN THE PERMIT REGARDING A DETERMINATION OF THE SRS REQUEST (3/18/92 LETTER, ODUM TO SADLER) TO HAVE TANKS 2-8 APPROVED AS EQUIVALENT DEVICES FOR SECONDARY CONTAINMENT.

ITEMS ON TF PERMIT TO DISCUSS / CLARIFY / NEGOTIATE WITH DHEC

DESCRIPTION

1) NEED TO DISCUSS TANK 2-8 EQUIVALENCY DETERMINATION

2) NEED TO DISCUSS EXPIRATION DATE VS. REPLACMENT EVAPORATOR ('97)

3) CHANGE: TYPE I TANK CAPACITY TO 750,000 GALLONS

4) ADD: AIKEN / BARNWELL COUNTIES

5) ADD: INFLUENTS: SRTC WASTES, REACTOR WASTES, {PROCESS CHEMICALS AND INCIDENTAL WASTES}?

6) ADD: F/H IAL, H/S IAO
- APP
- LPPP

7) LIST TANK #S

3/18/92

SPECIAL CONDITIONS

1) CONDITION #8 LIQUID LEVEL VS. OPERATING CAPACITY WITH CRACKED OR LEAKING TANKS DISCUSS

2) CONDITION #9 LEAKING TANKS BEING USED FOR WASTE RECEIPT DISCUSS

REVIEW/APPROVAL ROUTING SLIP

Title: WM Comments on the Draft Wastewater Permit for the Tank Farms and Special Conditions 1 - 12

Author's Name: Mathew Hunter Phone: 7-0520 Location: 742-6G

LIQUID WASTE REGULATORY COMPLIANCE MANAGER reviews for accuracy of content, format, addressee and additional reviews as appropriate.	Signature	1-19-93 Date
WMRC MANAGER reviews for accuracy of content, format, addressee and additional reviews as appropriate.	Signature	1-19-93 Date
HLW CONGNIZANT ENGINEERING MANAGER reviews for accuracy of content format, addressee and additional reviews as appropriate.	Signature	Date
HLW ENGINEERING MANAGER reviews for accuracy of content format, addressee and additional reviews as appropriate.	Signature	Date
H TANK FARM FACILITY MANAGER reviews for accuracy of content format, addressee and additional reviews as appropriate.	Signature	Date
IN TANK PRECIPITATION MANAGER RM reviews for accuracy of content format, addressee and additional reviews as appropriate.	Signature	Date
HIGH LEVEL WASTE OPERATIONS MANAGER reviews for accuracy of content format, addressee and additional reviews as appropriate.	Signature	1/14/93 Date
HIGH LEVEL WASTE MANAGER reviews for accuracy of content, format, addressee and additional reviews as appropriate.	Signature	1/14/93 Date

OSR 3-4A-W (Rev 1-89)

WESTINGHOUSE SAVANNAH RIVER COMPANY

INTER-OFFICE MEMORANDUM

WER-HLE-930250

January 14, 1993

To: C. R. Hayes, 703-18A
W. D. Dunaway, 703-18A

From: M. A. Hunter, 742-6G

WM Comments on the DRAFT Wastewater Permit for the Tank Farms and Special Conditions 1 - 12

The following represents the collective comments from Waste Management on the Draft Construction Permit for the F/H-Area Tank Farms. The comments apply to both the draft permit as well as special conditions numbered 1 through 12. These comments are summarized below:

Draft Permit:

- The text of the FFA should be lifted verbatim. This language has been agreed upon by both WM and DHEC. Rewording may skew the original intent of the FFA.

- There is no mention of the Tank 2 - 8 equivalency determination.

- The project should be in Aiken/Barnwell counties.

- The project description needs to be revised to be more reflective of the influent descriptions found is Section 5, page 205, of the permit application. These influents should also include SRL (SRTC) laboratory waste, reactor filter backwash, process chemicals and incidental wastes.

- The H-Area facility description does not include the F/H IAL, the H/S IAL, the APP or the LPP.

- The identified tanks should be listed by tank number.

- The capacity of the Type I tanks should be 750,000 gallons.

- The expiration date for the construction of the Replacement Evaporator will need to be extended.

Special Conditions 1 - 12:

- Condition 6 should read, "New or replacement waste tanks for Tanks 1 -

51, must be approved by SCDHEC before installation and entry into service of the tanks."

- Condition 7 is a redundant condition and should be removed. The requirements for new or replacement components will either be provided for by Special Condition #14 or by the verbage from the FFA.

- Condition 8 should read, "The permittee shall at all times maintain the liquid level of Tank 13 at a point below the lowest known crack or leak site."

- Condition 9 should read, "No tank that leaks or has leaked shall be used for waste receipt, as defined in Section 4.1 of the application, without prior approval from this Department. This is not applicable to Tank 13 or the addition of waste for waste removal purposes."

- Condition 10 requires clarification as to the liner extention (ITP) in question.

Waste Management would also request that the entire tank farms including ITP and NWTF be permitted at the time of final inspection. It is requested that the H/S Interarea Transfer Line be permitted separately or as a subset of the tank farm's permit. The completion of construction of the Replacement High Level Waste Evaporator will extend beyond the permit date and it is requested that it not be permitted at the final inspection.

CC:
G. T. Wright, 241-120H
W. B. Boore, 719-4A
R. M Satterfield, 719-4A
S. S. Cathey, 703-H
K. S. Wierzbicki, 742-6G
R. K. Roosa, 241-120H
T. M. Monahon, 703-H
R. W. Wilson, 703-H
K. F. Lesko, 703-H
V. G. Dickert, 703-F
W. A. Morrison, 703-F
C. J. Baker, 241-120H
E. R. Ennis, 241-120H
B. L. Lewis, 703-H
M. A. Ceravolo, 703-H
M. S. Peters, 703-F
T. B. Caldwell, 241-102F
G. D. Thaxton, 241-120H
W. B. Van Pelt, 241-152H
C. B. Stevens, 742-6G
P. D. d'Entremont, 703-H
J. A. Pike, 703-H
T. P. Gaughan, 241-152H
D. T. Bignell, 719-4A
D. M. Blue, 742-6G
J. E. Bolen, 703-A
C. Blair-McManus, 703-H

INTER-OFFICE MEMORANDUM
Savannah River Site

Date: 15-Jan-1993 11:20am EST
From: Chuck Hayes
HAYES-CR-Z9722
Dept: EPD
Tel No: X58838

TO: Matthew A. Hunter (HUNTER-MA-L2335 @A1@SASRS2)

CC: WALTER A. WILSON (WILSON-WA-O5215)

Subject: DRAFT TANK FARM WASTEWATER PERMIT (U)

This memo is intended to provide clarification on the statement contained in the draft permit that reads: THIS IS A PERMIT FOR CONSTRUCTION ONLY AND DOES NOT CONSTITUTE STATE DEPARTMENT OF HEALTH AND ENVIRONMENTAL CONTROL APPROVAL, TEMPORARY OR OTHERWISE, TO PLACE THIS SYSTEM IN OPERATION. This statement is generic to all wastewater construction permits. However, Special Condition #12 and the FFA both allow the facilities to remain under RCRA interim status until the wastewater permit to operate is issued. Therefore until the wastewater permit to operate is issued, all operations are controlled by the current RCRA Part A permit.

Please contact me if there are any questions.

OSR 3-4A-W (Rev 1-89)

WESTINGHOUSE SAVANNAH RIVER COMPANY

INTER-OFFICE MEMORANDUM

WER-HLE-930250

January 14, 1993

To: [redacted]
W. D. Dunaway, 703-18A

From: M. A. Hunter, 742-6G MAH

WM Comments on the DRAFT Wastewater Permit for the Tank Farms and Special Conditions 1 - 12

The following represents the collective comments from Waste Management on the Draft Construction Permit for the F/H-Area Tank Farms. The comments apply to both the draft permit as well as special conditions numbered 1 through 12. These comments are summarized below:

Draft Permit:

- The text of the FFA should be lifted verbatim. This language has been agreed upon by both WM and DHEC. Rewording may skew the original intent of the FFA.

- There is no mention of the Tank 2 - 8 equivalency determination.

- The project should be in Aiken/Barnwell counties.

- The project description needs to be revised to be more reflective of the influent descriptions found is Section 5, page 205, of the permit application. These influents should also include SRL (SRTC) laboratory waste, reactor filter backwash, process chemicals and incidental wastes.

- The H-Area facility description does not include the F/H IAL, the H/S IAL, the APP or the LPP.

- The identified tanks should be listed by tank number.

- The capacity of the Type I tanks should be 750,000 gallons.

- The expiration date for the construction of the Replacement Evaporator will need to be extended.

Special Conditions 1 - 12:

- Condition 6 should read, "New or replacement waste tanks for Tanks 1 -

51, must be approved by SCDHEC before installation and entry into service of the tanks."

• Condition 7 is a redundant condition and should be removed. The requirements for new or replacement components will either be provided for by Special Condition #14 or by the verbage from the FFA.

• Condition 8 should read, "The permittee shall at all times maintain the liquid level of Tank 13 at a point below the lowest known crack or leak site."

• Condition 9 should read, "No tank that leaks or has leaked shall be used for waste receipt, as defined in Section 4.1 of the application, without prior approval from this Department. This is not applicable to Tank 13 or the addition of waste for waste removal purposes."

• Condition 10 requires clarification as to the liner extention (ITP) in question.

Waste Management would also request that the entire tank farms including ITP and NWTF be permitted at the time of final inspection. It is requested that the H/S Interarea Transfer Line be permitted separately or as a subset of the tank farm's permit. The completion of construction of the Replacement High Level Waste Evaporator will extend beyond the permit date and it is requested that it not be permitted at the final inspection.

CC:
G. T. Wright, 241-120H
W. B. Boore, 719-4A
R. M Satterfield, 719-4A
S. S. Cathey, 703-H
K. S. Wierzbicki, 742-6G
R. K. Roosa, 241-120H
T. M. Monahon, 703-H
R. W. Wilson, 703-H
K. F. Lesko, 703-H
V. G. Dickert, 703-F
W. A. Morrison, 703-F
C. J. Baker, 241-120H
E. R. Ennis, 241-120H
B. L. Lewis, 703-H
M. A. Ceravolo, 703-H
M. S. Peters, 703-F
T. B. Caldwell, 241-102F
G. D. Thaxton, 241-120H
W. B. Van Pelt, 241-152H
C. B. Stevens, 742-6G
P. D. d'Entremont, 703-H
J. A. Pike, 703-H
T. P. Gaughan, 241-152H
D. T. Bignell, 719-4A
D. M. Blue, 742-6G
J. E. Bolen, 703-A
C. Blair-McManus, 703-H

W-0517

INTER-OFFICE MEMORANDUM
Savannah River Site

Date: 13-Jan-1993 10:43am EST
From: Bharat R. Damani
DAMANI-BR-Y4387 AT A1 AT SASRS2
Dept: T&E, ENV. AFFAIRS
Tel No: 78652

TO: W. DANNY DUNAWAY (DUNAWAY-WD-O7436 @A1@SLSRP1)

CC: Matthew A. Hunter (HUNTER-MA-L2335 AT A1 AT SASRS2)
CC: Kim S. Wierzbicki (WIERZBICKI-KS-O6535 AT A1 AT SASRS2)
CC: Kathy Z. Wolf (WOLF-KZ-O9884 AT A1 AT SASRS2)
CC: Chuck Hayes (HAYES-CR-Z9722 @A1@SLSRP1)

Subject: F & H area Wastewater Permit Draft

In reference to the special conditions specified in the draft permit I think it would be appropriate to include that the permit to operate Interarea Transfer Line and the APP and LPP will be issued separate from the Tank Farm waste water operating permit. This is based on the current discussion between Chuck Hayes and SCDHEC.

WILL HAPPEN

Also; just a suggestion; based on my experience at DWPF it is not very practical for control room to prepare and maintain a O & M manual with hundrdes of operating and maintenance procedures. Assuming that the tank farm facilities may have similar situation it may be important to reword the condition one accordingly so during the third party audit in the future it is not cited as a permit non compliance. In the case of DWPF SCDHEC, during final inspection, has accepted our approach to maintain the current operating procedures in the control room and the maintenance procedures in the works control/document control areas. However, for the benefit of the third party I would prefer to ave the special condition be revised accordingly.

W-0517

WESTINGHOUSE SAVANNAH RIVER COMPANY
FAX TRANSMISSION

UNCLASSIFIED FACSIMILE TRANSMITTAL
FAX NUMBER: (803) 557-0527
FAX LOCATION: 742-6G, Room 9

FROM THE OFFICES OF WASTE MANAGEMENT'S REGULATORY COMPLIANCE

DATE: 1/11 TIME: 5pm FAX # 54676

To: Chuck Hayes
Location: 703-18A
Telephone: 58838

From: Matt Hunter
Location: 742-6G
Telephone: 70520

COMMENTS:

Total Number of Pages 9 (Including Cover Sheet)

01-04-1990 03:44 P.009

2

Note: DHEC has made a verbal request for ten drawings from the permit application to be PE stamped and provided at the final inspection. This request is not to appear as a special condition.

OSR 3-4A-W (Rev 1-89)

WESTINGHOUSE SAVANNAH RIVER COMPANY

INTER-OFFICE MEMORANDUM

WER-HLE-930246

January 11, 1993

To: Distribution

From: M. A. Hunter, 742-6G

Approval of DRAFT Wastewater Permit for the Tank Farms

Please find attached a draft copy of the Wastewater Permit for the F/H Tank Farms. This draft has been issued to WSRC as a courtesy copy before issuance. For this reason, your input and approval has been requested. DHEC will issue the wastewater construction permit following WSRC approval. There will be additional special conditions added to the draft permit that reflect FFA language. This addition will be extensive and will not be transmitted to WSRC until after noon on 1/12. The additions will be transmitted to distribution as soon as they are received.

Please read the permit carefully since it will govern the future operation of the tank farms. The permit was written as though the FFA will not be signed. Therefore, it contains special conditions that are similar in language to that in the FFA (conditions 13 to end). However, if the FFA is signed, conditions 1 through 12 will stay in the permit and the remainder will be rescinded. Since this is an As-Built Construction Permit, it is written in the future tense. This is done as a formality and does not effect the intent of permit. Several points have been identified as requiring revision and are listed below:

(1) There is no mention of the Tank 2 - 8 equivalency determination.
(2) The project should be in Aiken/Barnwell counties.
(3) The request for the PE certification for the entire tank farm has been provide on page 14 of the permit application and will be presented to DHEC at the final inspection.
(4) The expiration date for the construction of the Replacement Evaporator will need to be extended.
(5) The project description seems to limit incidental influents (i.e. Reactor or SRTC waste streams).
(6) The capacity of the Type I tanks should be 750,000 gallons.
(7) Condition 8 should address "liquid level" not "operating capacity".
(8) Condition 9 seems to preclude the use of Tank 13.
(9) Condition 10 has been discussed with EPD and ITP personnel and a package will be prepared to meet this request.

WMRC has contacted EPD in order to begin preparation of a list of concerns that will then be transmitted to DHEC for revision of the permit before final issuance. DHEC is willing to work with WSRC in order to provide a permit that is equitable. A meeting has been set up to discuss your input to the final permit. This meeting has been set up for Wednesday, the 13th. in 703-H, Room 72 from 1000 to 1200.

To: G. T. Wright, 241-120H
W. B. Boore, 719-4A
S. S. Cathey, 703-H
K. S. Wierzbicki, 742-6G
R. K. Roosa, 241-120H
T. M. Monahon, 703-H
R. W. Wilson, 703-H
V. G. Dickert, 703-F
E. R. Ennis, 241-120H
B. L. Lewis, 703-H
M. S. Peters, 703-F
G. D. Thaxton, 241-120H
P. D. d'Entremont, 703-H
J. A. Pike, 703-H
T. P. Gaughan, 241-152H

CC: R. M Satterfield, 719-4A
R. Hayes, 703-18A
D. T. Bignell, 719-4A
K. F. Lesko, 703-H
W. A. Morrison, 703-F
D. M. Blue, 742-6G
M. A. Ceravolo, 703-H
T. B. Caldwell, 241-102F
W. B. Van Pelt, 241-152H

South Carolina
DHEC
Department of Health and Environmental Control
2600 Bull Street, Columbia, SC 29201

Interim Commissioner: Thomas E. Brown, Jr.

Board: John H. Burriss, Chairman
Richard E. Jabbour, DDS, Vice Chairman
Robert J. Stripling, Jr. Secretary

William E. Applegate, III
Toney Graham, Jr., MD
Sandra J. Molander
John B. Pate, MD

Promoting Health, Protecting the Environment

January 8, 1993

DRAFT

Mr. W.D. Dunaway, Manager
Permitting Field Support Group
Environmental Protection Department
Westinghouse Savannah River Co.
P.O. Box 616
Aiken, SC

Re: Construction Permit #17,-IW
SRS F/H-Area
Aiken County

Dear Sir:

Enclosed is a State Construction Permit for the above-referenced wastewater treatment facility. The conditions of the permit are explicitly stated: construction is to be performed in accordance with this permit and the supporting engineering report, plans and specifications approved by this Office.

Your EQC District contact from this Department is Myra Reece (address below). She should be notified when construction has begun and when the facility is ready for operation. A permit to operate must be issued before the permitted facility is placed in operation. At the time you request an operating permit you must submit a letter to our District Office from the Registered Engineer who signed Item X on the Application for Permit to Construct. The Engineer should certify that the construction has been completed in accordance with the approved plans and specifications. At the discretion of the Department, a final inspection may be required prior to operating permit issuance.

In accordance with State Law, your facility will be required to have an operator-in-charge who has been certified by the SC Environmental Certification Board. Your facility has been classified in Group IV-P/C, necessitating an operator holding a Grade A-P/C or higher certificate. You will not be given permission to operate your facility until a properly qualified operator(s) has been obtained. Questions in this matter should be directed to William R. Moore, SC Environmental Certification Board, 2221 Devine Street, Suite 320, Columbia, SC 29205.

Sincerely,

Address of District Contact:
218 Beaufort Street, NE
Aiken, S.C. 29801

Marion F. Sadler, Jr., Acting Director
Industrial & Agricultural
Wastewater Division

MFS/LEA

South Carolina
DHEC
Department of Health and Environmental Control
2600 Bull Street
Columbia, SC 29201

Bureau of Water Pollution Control
Permit To Construct

F/H-Area

DRAFT

Permission is hereby granted to: Westinghouse Savannah River Co.
P.O. Box 616
Aiken, S.C.

for the construction of a wastewater treatment system in accordance with the construction plans, specifications, engineering report and Construction Permit Application signed by Richard L. Stegen, Ihor John Nyszczot, Richard Kowalski and John William Nelson, Registered Professional Engineers, S. C. Registration Numbers: 12633, 10901, 14077, and 4448 respectively.

Project Name: F and H-Area High-Level Radioactive Waste Tank Farms **County:** Aiken

Project Description: (See Attachment)

The wastewater generated at this facility will be sent to the F/H ETF, precipitate slurry and sludge will be sent to the DWPF, and decontaminated salt solution will be sent to the Z-Area Saltstone Manufacturing and Disposal Facility.

There is no direct discharge from this facility.

The effluent concentrations of those constituents the wastewater treatment system is designed to remove or reduce are as required by the receiving facilities.

Treatment System Classification: Group IV-PC.

Special Conditions: (See Attachment)

Permit Number: 17,-IW **Date of Issue:** January 8, 1993

Expiration Dates: Unless construction begins prior to January 8, 1994 and construction is completed prior to January 8, 1995 this permit will expire.

In accepting this permit, the owner agrees to the admission of properly authorized persons at all reasonable hours for the purpose of sampling and inspection.

THIS IS A PERMIT FOR CONSTRUCTION ONLY AND DOES NOT CONSTITUTE STATE DEPARTMENT OF HEALTH AND ENVIRONMENTAL CONTROL APPROVAL, TEMPORARY OR OTHERWISE, TO PLACE THIS SYSTEM IN OPERATION.

Bureau of Water Pollution Control

SENT BY:Xerox Telecopier 7020 ; 1- 6-93 ; 11:11AM ; 7254843→ ;# 4

Project Description

DRAFT

The construction of two wastewater storage and treatment facilities and associated transfer systems, one in F-Area the other in H-Area, designed to treat wastewater generated at the F-Area Separations Facility, H-Area Separations Facility, Equipment Decontamination/Repair Facility, F/H Effluent Treatment Facility, Defense Waste Processing Facility, Receiving Basin for Offsite Fuels and Resin Regeneration Facility.

The F-Area facility consists of the following equipment:

1. 22 tanks, eight of which are 720,000 gal Type I tanks, ten 1,300,000 gal Type III/IIIA tanks, and four are 1,300,000 gal Type IV tanks.
2. Two evaporator systems (242-F and 242-16F) each of which consists of an evaporator, condenser, mercury collection tank, cesium removal pump tank and column, overheads hold tanks, and overheads diverting tank (242-F only). The 242-F evaporator system also contains a waste concentrate transfer system.
3. Six (6) diversion boxes (FDB1, FDB2, FDB3, FDB4, FDB5, FDB6)
4. Three (3) pump pits (FPP1, FPP2, FPP3)
5. Associated pumps and piping.

The H-Area facility consists of the following equipment:

1. 27 tanks, four (4) of which are 720,000 gal Type I tanks, three (3) are 1,030,000 gal Type II tanks, sixteen (16) 1,300,000 gal Type III/IIIA tanks, and four (4) 1,300,000 gal Type IV tanks.
2. Three (3) evaporator systems (242-H, 242-16H, and 242-25H) each of which consists of an evaporator, condenser, mercury collection tank, cesium removal pump tank and column, and overheads hold tanks. The 242-H evaporator system also contains a waste concentrate transfer system.
3. Eight (8) diversion boxes (HDB1, HDB2, HDB3, HDB4, HDB5, HDB6, HDB7, HDB8)
4. Ten (10) pump pits (HPP1, HPP2, HPP3, HPP4, HPP5, HPP6, HPP7, HPP8, HPP9, HPP10)
5. In-Tank Precipitation Process consisting of:
   a. Two (2) Cross flow filters
   b. One (1) precipitate stripper column
   c. One (1) wash stripper column
   d. Two (2) hold tanks
6. Associated pumps and piping.

DRAFT

SPECIAL CONDITIONS

1. The permittee shall maintain at each permitted facility a complete Operations and Maintenance Manual for the waste treatment system. The manual shall be made available for on-site review during normal working hours. The manual shall contain operation and maintenance instructions for all equipment and appurtenances associated with the waste treatment system. The manual shall contain a general description of the treatment process(es), operating characteristics that will produce maximum treatment efficiency and corrective action to be taken should operating difficulties be encountered.

2. The permittee shall provide for the performance of routine daily treatment plant inspections by a certified operator of the appropriate grade. The inspections shall include, but are not limited to, areas which require a visual observation to determine efficient operations and for which immediate corrective measures can be taken using the O & M manual as a guide. All inspections shall be recorded and shall include the date, time and name of person making the inspection, corrective measures taken, and routine equipment maintenance, repair, or replacement performed. The permittee shall maintain all records of inspections at the permitted facility and the records shall be made available for on-site review during normal working hours.

3. The permittee shall develop and implement a Best Management Practices (BMP) plan to identify and control the discharge of significant amounts of oils and the hazardous and toxic substances listed in 40 CFR Part 117 and Tables II and III of Appendix D to 40 CFR Part 122. The plan shall include a listing of all potential sources of spills or leaks of these materials, a method for containment, a description of training, inspection and security procedures, and emergency response measures to be taken in the event of a discharge to surface waters or plans and/or procedures which constitute an equivalent BMP. Sources of such discharges may include materials storage areas; in-plant transfer, process and material handling areas; loading and unloading operations; plant site runoff; and sludge and waste disposal areas. The BMP plan shall be developed, and updated as necessary, in accordance with good engineering practices, shall be documented in narrative form, and shall include any necessary plot plans, drawings, or maps. The BMP plan shall be developed no later than six months after issuance of the final permit (or modification), shall be implemented no later than one year after issuance of the final permit (or modification). A Spill Prevention Control and Countermeasure (SPCC) plan may be used in lieu of a BMP plan if BMP requirements are satisfied. The BMP plan or its equivalent shall be maintained at the plant site and shall be available for inspection by EPA and Department personnel.

4. No chemicals (process or otherwise) shall be added to the waste tanks which will alter the composition of the F/H ETF effluent from that which was evaluated for the NPDES permit.

5. The addition (not replacement) of new piping and chemical feed systems, even though related to the F/H Tank Farm process, shall not be considered normal operation if the piping and/or feed systems are to be located outside the tank farm boundary.

DRAFT

6. New or replacement tanks must be approved by SCDHEC before installation and entry into service of the tank.

7. For new or replacement waste tank system components, an assessment shall be submitted annually within sixty days of the anniversary date of this permit for all components installed during the previous year.

8. The permittee shall at all times maintain the operating capacity of all tanks at a point below the lowest known crack or leak.

9. No tank that leaks or has leaked shall be used for waste receipt without prior approval from this Department.

10. Within 60 days from the effective date of this permit the Permittee shall submit to this office a report containing the QA/QC procedures followed during the installation of the liner extension on secondary containment.

11. The Permittee shall maintain contingency plans or emergency procedures in place to respond to any known emergency situation with the potential to negatively impact human health or the environment. The plans and/or procedures shall be updated as necessary to include new information or changing conditions.

12. On June 30, 1987 the permittee submitted a revised RCRA Part A permit application which included the high-level radioactive waste tank system(s) contained in this permit. After this office issues the wastewater construction and operating permits for this facility, the permittee should amend its RCRA Part A permit to delete the tank system(s).

13. For each F- and H-Area high level waste tank system(s) or component(s) installed or modified after the issuance of this permit, the permittee shall prepare and submit for SCDHEC approval, a wastewater construction permit application or application for a permit modification in accordance with applicable SCDHEC regulations. Replacement of individual components with identical items meeting secondary containment standards, as agreed upon by the permittee and this office, or localized repair of small sections of pipe shall not require permit modification. Replacement of components that do not meet the secondary containment standards may require permit modification.

14. For each F and H Area high level waste tank system or component installed after the effective date of this permit, the DOE shall prepare a written assessment, certified by a registered professional engineer, that the waste tank system or component has sufficient structural integrity and is acceptable for the storing or treating of hazardous and/or radioactive substances. No assessment shall be required for installation of ancillary equipment in an existing tank system where the installation of the ancillary equipment does not modify the secondary containment or structural integrity for the tank system. Furthermore, an assessment is not required for installation of ancillary equipment where the equipment matches the description(s) in the approved assessment(s) for the tank systems, such as for routine maintenance.

W-0517

INTER-OFFICE MEMORANDUM
Savannah River Site

Date: 11-Jan-1993 06:27pm EST
From: Matthew A. Hunter
HUNTER-MA-L2335 AT A1 AT SASRS2
Dept: WMRC
Tel No: 557-0520/bp#6761

TO: See Below

Subject: Draft WW Permit

A draft copy of the wastewater construction permit for the tank farms has been delivered to you. Please review the document at the earliest possible time. I have set up a meeting on Wednesday 1/13, in 703-H, Rm. 72 from 1000 until 1200 to discuss any additional concerns with the permit. DHEC is setting a precedent by providing a courtesy copy of the permit for WSRC input. This is our chance to get the permit right the first time. I also ask that you make every effort to attend the 1/13 meeting. The sooner we can provide input to DHEC, the sooner DHEC will issue the permit.

Please note that your copies are not complete. There will be several pages of special conditions forthcoming from DHEC. These conditions will deal solely with the FFA standards as found in Section IX and Appendix B of the FFA. DHEC has promised to transmit these condition to WSRC by midday 1/12. I will forward them to each of you as soon as possible.

Please contact me at 7-0520 if you have not received your copy of the permit or if I can be of any other assistance.

Distribution:

TO:	TIMOTHY P. GAUGHAN	(GAUGHAN-TP-O8815 AT A1 AT SASRS2)
TO:	Jeff Pike	(PIKE-JA-Y5547 AT A1 AT SASRS2)
TO:	PAUL D. D'ENTREMONT	(D'ENTREMONT-PD-O5438 AT A1 AT SASRS2)
TO:	Donald Thaxton	(THAXTON-GD-O5806 AT A1 AT SASRS2)
TO:	Mark S. Peters	(PETERS-MS-O5010 AT A1 AT SASRS2)
TO:	Brenda L. Lewis	(LEWIS-BL-O6503 AT A1 AT SASRS2)
TO:	Eddie R. Ennis	(ENNIS-ER-Y6279 @A1@SRXSS2)
TO:	V.G. Dickert	(DICKERT-VG-O4857 AT A1 AT SASRS2)
TO:	Robert W. Wilson	(WILSON-RW-T4847 AT A1 AT SASRS2)
TO:	TOM MONAHON	(MONAHON-TM-O4411 @A1@SRXSS2)
TO:	Roger K. Roosa	(ROOSA-RK-L4532 AT A1 AT SASRS2)
TO:	Kim S. Wierzbicki	(WIERZBICKI-KS-O6535 AT A1 AT SASRS2)
TO:	Dot Matthews	(MATTHEWS-DL-W0643 AT A1 AT SASRS2)
TO:	W. Brent Boore	(BOORE-WB-O6688 AT A1 AT SASRS2)
TO:	Ginny Ellis	(ELLIS-VE-W0928 AT A1 AT SASRS2)
CC:	Bill Van Pelt	(VANPELT-WB-O7016 AT A1 AT SASRS2)
CC:	Thomas B. Caldwell	(CALDWELL-TB-Y6683 AT A1 AT SASRS2)
CC:	Mario A. Ceravolo, 703-H	(CERAVOLO-MA-O7495 AT A1 AT SASRS2)
CC:	Douglas M. Blue	(BLUE-DM-L4808 @A1@SRXSS2)
CC:	W.A. Morrison	(MORRISON-WA-T7866 AT A1 AT SASRS2)
CC:	Karen F. Lesko	(LESKO-KF-O7041 AT A1 AT SASRS2)
CC:	D T BIGNELL	(BIGNELL-DT-O5579 @A1@SLSRP1)
CC:	Chuck Hayes	(HAYES-CR-Z9722 @A1@SLSRP1)

1 | 22

INTER-OFFICE MEMORANDUM
Savannah River Site

Date: 11-Jan-1993 02:37pm EST
From: Matthew A. Hunter
HUNTER-MA-L2335
Dept: WMRC
Tel No: 557-0520/bp#6761

TO: See Below

Subject: Resolution of Actions for WW/FFA Approval

In order to prepare for the approval of both the Tank Farm Wastewater Permit (TFWWP) and the Federal Facility Agreement (FFA) there are several open actions that require closure. The following is a list of those actions including responsible parties and target completion dates for each actions.

Wastewater Permit

1.a Comment on draft construction permit.
Responsible party: All
Completion Date: Complete

1.b Negotiate final special conditions.
Responsible party: WMRC
Completion Date: With Permit

2.a Develop a three phase schedule for operator training to acheive full compliance with South Carolina Environmental Certification Board regulations.
Responsible party: Walter Wilson
Completion Date: Complete

2.b Acceptance by EPD as fulfilling SCECB regulations.
Responsible party: WMRC
Completion Date: Complete
Status: Accepted with stipulations (see attached AIO, W. L. Payne to M. A. Hunter, dated 1/11/93).

2.c Ensure WMO is capable of meeting stipulations.
Responsible party: WMO (WAW)
Completion Date: 1/22

3.a Propose revisions to WM Tech Review to ensure that all modifications that will effect the description in the wastewater permit application will be recognized and caught. (This will trigger any required PE certifications per the FFA.)
Responsible party: WMRC (MAH & MJH)
Completion Date: 1/29

3.b Train HLWE Engineers on new WM Tech Review procedures.
Responsible party: WMRC
Completion Date: Once procedure is issued.

ADD
ITP
• LINER EXTENSION INSTALLATION PROCEDURE
~~• WR SCHEDULE/PLAN~~
• KOWALSKI PE LETTERS
- IAL
- HDB 8
- PERSIVE ITP CERT.

PROCEDURE TO PULL EVERYTHING TOGETHER

4.c

4.a Issue guidance on contents of Operation and Maintenance manual and Operator in Charge Logbook.
Responsible party: WMRC (MAH)
Completion Date: 1/21

• COMPLETION SCH. FOR RHLWE
• MODIFY W TRANSFER PROCEDURE TO INCLUDE SP. GUIDES FOR LEAKERS

4.b Implement O&M manual.
Responsible party: WMO
Completion Date: 2/8

5. Review Best Management Practice plan to ensure DOE is in concurrence.
Responsible party: WMRC (DMB)
Completion Date: 1/20

6. Draft memo for withdrawal of Tank Farms from RCRA Part A application.
Responsible party: WMRC (DMB)
Completion Date: 1/21

7. Propose pathforward for matrix for usable chemicals in the tank farms that will not alter the composition of the ETF effluent. (Condition #4)
Responsible party: WMRC & HLWE (AWW, MAH, KNU & DMB)
Completion Date: 1/29

8. Ensure that wastewater records can be retained off-site and that retreival will be sufficient to meet regulator's requirements
Responsible party: WMRC (DMB)
Completion Date: 1/22

9. Obtain services of Professional Engineer to stamp 10 prints requested by DHEC.
Responsible party: WMRC (MAH & CBS)
Completion Date: 1/20

10. Invite DHEC for Final Inspection.
Responsible party: WMRC (MAH) SSC says DIAN FINAL FOR @ 2/15
Completion Date: 2/8

DESIGNATE 2F FOR HHW USE

11. Package all changes to application for transmittal to DHEC (including 2F)
Responsible party: WMRC/HLWE(DMB & JEG)
Completion Date: 1/29

12. Issue guidance for what will require permit modifications and how to make modification. (Condition 7)
Responsible party: WMRC (MAH & DMB)
Completion Date: 2/8

<u>Federal Facility Agreement</u>

1. Meet with Gary Abel to discuss services of a Professional Engineer for certification of modifications to secondary containment.
Responsible party: WMRC (MAH & CBS)
Completion Date: 1/27

2.a Review WM Response to Leaks procedure for adequacy.
Responsible party: WMRC/WMO/HLWE
Completion Date: 1/22

2.b Propose revisions to leak procedures to ensure compliance.
Responsible party: WMRC
Completion Date: 1/29

. UR SCHEDULE

3. Develop Logic Diagram for the responses for leaks.
Responsible party: WMRC (DMB & RSM)
Completion Date: 2/15

4. Propose revisions to WM SIRIM procedures to ensure that releases to the environment are properly clean up and documented.
Responsible party: WMRC (MAH & MJH)
Completion Date: 1/27

Distribution:

TO:	CARY B. STEVENS	(STEVENS-CB-O5981)
CC:	Todd Wright	(WRIGHT-GT-T6181)
CC:	SUSAN S. CATHEY	(CATHEY-SS-O4949)
CC:	Rod M. Satterfield	(SATTERFIELD-RM-T3212 @A1@SLSRP1)
CC:	W. Brent Boore	(BOORE-WB-O6688)
CC:	TOM MONAHON	(MONAHON-TM-O4411 @A1@SRXSS2)
CC:	Roger K. Roosa	(ROOSA-RK-L4532)
CC:	Robert W. Wilson	(WILSON-RW-T4847)
CC:	V.G. Dickert	(DICKERT-VG-O4857)
CC:	Chris J. Baker	(BAKER-CJ-B4996 @A1@SRXSS2)
CC:	Arthur S. Greer	(GREER-AS-Y6907)
CC:	Brenda L. Lewis	(LEWIS-BL-O6503)
CC:	Mark S. Peters	(PETERS-MS-O5010)
CC:	Kim S. Wierzbicki	(WIERZBICKI-KS-O6535)
CC:	Arthur W. Wiggins, Jr.	(WIGGINS-AW-O6172)
CC:	Mario A. Ceravolo, 703-H	(CERAVOLO-MA-O7495)
CC:	Thomas B. Caldwell	(CALDWELL-TB-Y6683)
CC:	WALTER A. WILSON	(WILSON-WA-O5215 @A1@SLSRP1)
CC:	Johnna E. Griffiths	(GRIFFITHS-JE-Y5542)
CC:	Kester Uzochukwu	(UZOCHUKWU-K-L1224)
CC:	Michael J. Hagenbarth	(HAGENBARTH-MJ-L2326)
CC:	Robert S. Murphy	(MURPHY-RS-B9654)
CC:	Douglas M. Blue	(BLUE-DM-L4808 @A1@SRXSS2)

OSR 3-4A-W (Rev1-89)

W-0517

WESTINGHOUSE SAVANNAH RIVER COMPANY

INTER-OFFICE MEMORANDUM

ESH-FSS-93-0013

January 11, 1993

TO: K. S. WIERZBICKI, 742-6G

FROM: W. D. DUNAWAY, 703-18A
(X5-5754)

WDDunaway

DRAFT WASTEWATER PERMIT FOR F/H HIGH LEVEL WASTE TANK FARMS (U)

Attached is a copy of the draft SCDHEC construction permit for the F/H Tank Farms (including the In-Tank Precipitation Facility). The draft is complete with the exception of some additional FFA special conditions that will be forthcoming from SCDHEC. Special Conditions 1-12 will stay in the permit with or without the FFA; Special Conditions 13, 14, and any additional FFA conditions will be deleted with an executed FFA. Please have the appropriate Waste Management personnel (Westinghouse and DOE-LWD) review the draft permit and provide your collective comments to me by COB 1/13/93. DOE-ECD and Westinghouse General Counsel are also reviewing the permit. This is the first time SCDHEC has provided SRS with a draft copy of a construction permit for review prior to formal issue. Let's take advantage of this unique opportunity to shape our future with this permit.

After an initial EPD review, it appears that Special Conditions 5, 8, 9 and 10 may be of concern. A further clarification or revision of these by SCDHEC may be needed.

Also, SCDHEC has identified ten drawings in the permit application package that must be PE-stamped and signed before the permit-to-operate can be issued. These drawings are as follows:

- Figures 2-3 thru 2-5 (blueprints)
- Figures 4-24 (W2017868) and 4-25 (W2017867)
- Figures 7-1 (W2020288), 7-4 (W2020290), 7-5 (W2020289) and 7-7 (W2020291)

Please provide me a schedule by 1/22/93 for having these drawings stamped and signed.

If there are any questions, please contact myself or Chuck Hayes (x5-8838).

CRH:pr
Attachment

CC:
S. S. Cathey, 703-H
L. S. Coward, 703-18A *
P. D. d'Entremont, 703-H
A. R. Gough, 992-3W
C. R. Hayes, 703-18A
M. Hawkins, 742-A
M. A. Hunter, 742-6G
B. L. Lewis, 703-H
J. V. Odum, 742-A
J. S. Roberts, 742-A
R. M. Satterfield, 719-4A
G. F. Stejskal, 742-A
C. B. Stevens, 742-6G
K. Z. Wolf, 704-15S
G. T. Wright, 703-H
Records Administration, 773-52A *
EPD Fileroom, 742-A

South Carolina
DHEC
Department of Health and Environmental Control
2600 Bull Street, Columbia, SC 29201

Interim Commissioner: Thomas E. Brown, Jr.

Board: John H. Burriss, Chairman
Richard E. Jabbour, DDS, Vice Chairman
Robert J. Stripling, Jr. Secretary

William E. Applegate, III,
Toney Graham, Jr., MD
Sandra J. Molander
John B. Pate, MD

Promoting Health. Protecting the Environment

2

January 8, 1993

DRAFT

Mr. W.D. Dunaway, Manager
Permitting Field Support Group
Environmental Protection Department
Westinghouse Savannah River Co.
P.O. Box 616
Aiken, SC

Re: Construction Permit #17,-IW
SRS F/H-Area
Aiken County

Dear Sir:

Enclosed is a State Construction Permit for the above-referenced wastewater treatment facility. The conditions of the permit are explicitly stated: construction is to be performed in accordance with this permit and the supporting engineering report, plans and specifications approved by this Office.

Your EQC District contact from this Department is Myra Reece (address below). She should be notified when construction has begun and when the facility is ready for operation. A permit to operate must be issued before the permitted facility is placed in operation. At the time you request an operating permit you must submit a letter to our District Office from the Registered Engineer who signed Item X on the Application for Permit to Construct. The Engineer should certify that the construction has been completed in accordance with the approved plans and specifications. At the discretion of the Department, a final inspection may be required prior to operating permit issuance.

In accordance with State Law, your facility will be required to have an operator-in-charge who has been certified by the SC Environmental Certification Board. Your facility has been classified in Group IV-P/C, necessitating an operator holding a Grade A-P/C or higher certificate. You will not be given permission to operate your facility until a properly qualified operator(s) has been obtained. Questions in this matter should be directed to William R. Moore, SC Environmental Certification Board, 2221 Devine Street, Suite 320, Columbia, SC 29205.

Sincerely,

Address of District Contact:
218 Beaufort Street, NE
Aiken, S.C. 29801

Marion F. Sadler, Jr., Acting Director
Industrial & Agricultural
Wastewater Division

MFS/LEA

recycled paper

South Carolina
DHEC
Department of Health and Environmental Control
2600 Bull Street
Columbia, SC 29201

Bureau of Water Pollution Control
Permit To Construct

3

F/H-Area

DRAFT

Permission is hereby granted to: Westinghouse Savannah River Co.
P.O. Box 616
Aiken, S.C.

for the construction of a wastewater treatment system in accordance with the construction plans, specifications, engineering report and Construction Permit Application signed by Richard L. Stegen, Ihor John Nyszczot, Richard Kowalski and John William Nelson, Registered Professional Engineers, S. C. Registration Numbers: 12633, 10901, 14077, and 4448 respectively.

Project Name: F and H-Area High-Level Radioactive Waste Tank Farms **County:** Aiken

Project Description: (See Attachment)

The wastewater generated at this facility will be sent to the F/H ETF, precipitate slurry and sludge will be sent to the DWPF, and decontaminated salt solution will be sent to the Z-Area Saltstone Manufacturing and Disposal Facility.

There is no direct discharge from this facility.

The effluent concentrations of those constituents the wastewater treatment system is designed to remove or reduce are as required by the receiving facilities.

Treatment System Classification: Group IV-PC.

Special Conditions: (See Attachment)

Permit Number: 17,-IW **Date of Issue:** January 8, 1993

Expiration Dates: Unless construction begins prior to January 8, 1994 and construction is completed prior to January 8, 1995 this permit will expire.

In accepting this permit, the owner agrees to the admission of properly authorized persons at all reasonable hours for the purpose of sampling and inspection.

THIS IS A PERMIT FOR CONSTRUCTION ONLY AND DOES NOT CONSTITUTE STATE DEPARTMENT OF HEALTH AND ENVIRONMENTAL CONTROL APPROVAL, TEMPORARY OR OTHERWISE, TO PLACE THIS SYSTEM IN OPERATION.

_____
Bureau of Water Pollution Control

4

Project Description

DRAFT

The construction of two wastewater storage and treatment facilities and associated transfer systems, one in F-Area the other in H-Area, designed to treat wastewater generated at the F-Area Separations Facility, H-Area Separations Facility, Equipment Decontamination/Repair Facility, F/H Effluent Treatment Facility, Defense Waste Processing Facility, Receiving Basin for Offsite Fuels and Resin Regeneration Facility.

The F-Area facility consists of the following equipment:

1. 22 tanks, eight of which are 720,000 gal Type I tanks, ten 1,300,000 gal Type III/IIIA tanks, and four are 1,300,000 gal Type IV tanks.
2. Two evaporator systems (242-F and 242-16F) each of which consists of an evaporator, condenser, mercury collection tank, cesium removal pump tank and column, overheads hold tanks, and overheads diverting tank (242-F only). The 242-F evaporator system also contains a waste concentrate transfer system.
3. Six (6) diversion boxes (FDB1, FDB2, FDB3, FDB4, FDB5, FDB6)
4. Three (3) pump pits (FPP1, FPP2, FPP3)
5. Associated pumps and piping.

The H-Area facility consists of the following equipment:

1. 27 tanks, four (4) of which are 720,000 gal Type I tanks, three (3) are 1,030,000 gal Type II tanks, sixteen (16) 1,300,000 gal Type III/IIIA tanks, and four (4) 1,300,000 gal Type IV tanks.
2. Three (3) evaporator systems (242-H, 242-16H, and 242-25H) each of which consists of an evaporator, condenser, mercury collection tank, cesium removal pump tank and column, and overheads hold tanks. The 242-H evaporator system also contains a waste concentrate transfer system.
3. Eight (8) diversion boxes (HDB1, HDB2, HDB3, HDB4, HDB5, HDB6, HDB7, HDB8)
4. Ten (10) pump pits (HPP1, HPP2, HPP3, HPP4, HPP5, HPP6, HPP7, HPP8, HPP9, HPP10)
5. In-Tank Precipitation Process consisting of:
   a. Two (2) Cross flow filters
   b. One (1) precipitate stripper column
   c. One (1) wash stripper column
   d. Two (2) hold tanks
6. Associated pumps and piping.

DRAFT

SPECIAL CONDITIONS

1. The permittee shall maintain at each permitted facility a complete Operations and Maintenance Manual for the waste treatment system. The manual shall be made available for on-site review during normal working hours. The manual shall contain operation and maintenance instructions for all equipment and appurtenances associated with the waste treatment system. The manual shall contain a general description of the treatment process(es), operating characteristics that will produce maximum treatment efficiency and corrective action to be taken should operating difficulties be encountered.

2. The permittee shall provide for the performance of routine daily treatment plant inspections by a certified operator of the appropriate grade. The inspections shall include, but are not limited to, areas which require a visual observation to determine efficient operations and for which immediate corrective measures can be taken using the O & M manual as a guide. All inspections shall be recorded and shall include the date, time and name of person making the inspection, corrective measures taken, and routine equipment maintenance, repair, or replacement performed. The permittee shall maintain all records of inspections at the permitted facility and the records shall be made available for on-site review during normal working hours.

3. The permittee shall develop and implement a Best Management Practices (BMP) plan to identify and control the discharge of significant amounts of oils and the hazardous and toxic substances listed in 40 CFR Part 117 and Tables II and III of Appendix D to 40 CFR Part 122. The plan shall include a listing of all potential sources of spills or leaks of these materials, a method for containment, a description of training, inspection and security procedures, and emergency response measures to be taken in the event of a discharge to surface waters or plans and/or procedures which constitute an equivalent BMP. Sources of such discharges may include materials storage areas; in-plant transfer, process and material handling areas; loading and unloading operations; plant site runoff; and sludge and waste disposal areas. The BMP plan shall be developed, and updated as necessary, in accordance with good engineering practices, shall be documented in narrative form, and shall include any necessary plot plans, drawings, or maps. The BMP plan shall be developed no later than six months after issuance of the final permit (or modification), shall be implemented no later than one year after issuance of the final permit (or modification). A Spill Prevention Control and Countermeasure (SPCC) plan may be used in lieu of a BMP plan if BMP requirements are satisfied. The BMP plan or its equivalent shall be maintained at the plant site and shall be available for inspection by EPA and Department personnel.

4. No chemicals (process or otherwise) shall be added to the waste tanks which will alter the composition of the F/H ETF effluent from that which was evaluated for the NPDES permit.

5. The addition (not replacement) of new piping and chemical feed systems, even though related to the F/H Tank Farm process, shall not be considered normal operation if the piping and/or feed systems are to be located outside the tank farm boundary.

DRAFT

6. New or replacement tanks must be approved by SCDHEC before installation and entry into service of the tank.

7. For new or replacement waste tank system components, an assessment shall be submitted annually within sixty days of the anniversary date of this permit for all components installed during the previous year.

8. The permittee shall at all times maintain the operating capacity of all tanks at a point below the lowest known crack or leak.

9. No tank that leaks or has leaked shall be used for waste receipt without prior approval from this Department.

10. Within 60 days from the effective date of this permit the Permittee shall submit to this office a report containing the QA/QC procedures followed during the installation of the liner extension on secondary containment.

11. The Permittee shall maintain contingency plans or emergency procedures in place to respond to any known emergency situation with the potential to negatively impact human health or the environment. The plans and/or procedures shall be updated as necessary to include new information or changing conditions.

12. On June 30, 1987 the permittee submitted a revised RCRA Part A permit application which included the high-level radioactive waste tank system(s) contained in this permit. After this office issues the wastewater construction and operating permits for this facility, the permittee should amend its RCRA Part A permit to delete the tank system(s).

13. For each F- and H-Area high level waste tank system(s) or component(s) installed or modified after the issuance of this permit, the permittee shall prepare and submit for SCDHEC approval, a wastewater construction permit application or application for a permit modification in accordance with applicable SCDHEC regulations. Replacement of individual components with identical items meeting secondary containment standards, as agreed upon by the permittee and this office, or localized repair of small sections of pipe shall not require permit modification. Replacement of components that do not meet the secondary containment standards may require permit modification.

14. For each F and H Area high level waste tank system or component installed after the effective date of this permit, the DOE shall prepare a written assessment, certified by a registered professional engineer, that the waste tank system or component has sufficient structural integrity and is acceptable for the storing or treating of hazardous and/or radioactive substances. No assessment shall be required for installation of ancillary equipment in an existing tank system where the installation of the ancillary equipment does not modify the secondary containment or structural integrity for the tank system. Furthermore, an assessment is not required for installation of ancillary equipment where the equipment matches the description(s) in the approved assessment(s) for the tank systems, such as for routine maintenance.

W-0517 \

INTER-OFFICE MEMORANDUM
Savannah River Site

Date: 11-Jan-1993 09:44am EST
From: Bill Payne
PAYNE-WL-Y7708
Dept: EPD/ESH&QA
Tel No: 59002

TO: See Below

Subject: RE: Tank Farms

Bobby James, Chuck Hayes, and I have discussed your operator plans for the Tank Farm and concur with them under the following conditions:

1. Tank Farm staff follow all of the requirements spelled out in ECM 20.1, WSRC Certified Operator Procedure.

2. As stated in your All-In-1, there will be one A-Level operator per shift per facility by June, 1994.

3. Adequate in-house training is provided for all operators so that they can effectively operate all three facilities. Auditable records of this training should be maintained.

4. Each A-Level shift operator is readily available and easily accessable to all other operators and regulators at all times.

5. The A-Level shift operators understand that they are responsible, and liable, for all activities in all three facilities when they are on duty.

6. There are log books in the control rooms of all three facilities that are signed shiftly by the A-Level operator and daily by the OIC.

7. All other operators work towards A-Level certification according to the requirements of ECM 20.1.

Call if you have any questions.

Distribution:

TO:	Matthew A. Hunter	(HUNTER-MA-L2335 AT A1 AT SASRS2
CC:	CARY B. STEVENS	(STEVENS-CB-O5981 AT A1 AT SASRS
CC:	WALTER A. WILSON	(WILSON-WA-O5215 @A1@SLSRP1)
CC:	Bobby R. James	(JAMES-BR-O7951 AT A1 AT SASRS2
CC:	Chuck Hayes	(HAYES-CR-Z9722)
CC:	JOHN L. KEYES	(KEYES-JL-O8263)
CC:	Ann R. Gough	(GOUGH-AR-Y5417)

CC:	Robin H. Young	(YOUNG-RH-O6098 AT A1 AT SLSRP1)
CC:	Rue Ann Thomas	(THOMAS-RA-Y6757 AT A1 AT SLSRP1)
CC:	Donald R. Morris	(MORRIS-DR-B5075 AT A1 AT SLSRP1)
CC:	John T. McRee	(MCREE-JT-Y4675 AT A1 AT SLSRP1)
CC:	J. Phil Harmon	(HARMON-JP-Y8718 AT A1 AT SLSRP1)
CC:	D. Steve Glover	(GLOVER-DS-L2828 @A1@SASRS2)
CC:	Ross L. Fanning	(FANNING-RL-Y6200 @A1@SASRS2)
CC:	Lori S. Coward	(COWARD-LS-Z6459 AT A1 AT SLSRP1)
CC:	Dewey L. Brown	(BROWN-DL-O5129 AT A1 AT SLSRP1)
CC:	Jay B. Hutchison, Jr.	(HUTCHISON-JB-O9610 AT A1 AT SLSRP1)

Final

South Carolina
DHEC
Department of Health and Environmental Control
2600 Bull Street, Columbia, SC 29201

Interim Commissioner: Thomas E. Brown, Jr.

Board: John H. Burriss, Chairman
Richard E. Jabbour, DDS, Vice Chairman
Robert J. Stripling, Jr. Secretary

William E. Applegate, III,
Toney Graham, Jr., MD
Sandra J. Molander
John B. Pate, MD

Promoting Health, Protecting the Environment

January 8, 1993

DRAFT

Mr. W.D. Dunaway, Manager
Permitting Field Support Group
Environmental Protection Department
Westinghouse Savannah River Co.
P.O. Box 616
Aiken, SC

Re: Construction Permit #17,-IW
SRS F/H-Area
Aiken County

Dear Sir:

Enclosed is a State Construction Permit for the above-referenced wastewater treatment facility. The conditions of the permit are explicitly stated: construction is to be performed in accordance with this permit and the supporting engineering report, plans and specifications approved by this Office.

Your EQC District contact from this Department is Myra Reece (address below). She should be notified when construction has begun and when the facility is ready for operation. A permit to operate must be issued before the permitted facility is placed in operation. At the time you request an operating permit you must submit a letter to our District Office from the Registered Engineer who signed Item X on the Application for Permit to Construct. The Engineer should certify that the construction has been completed in accordance with the approved plans and specifications. At the discretion of the Department, a final inspection may be required prior to operating permit issuance.

In accordance with State Law, your facility will be required to have an operator-in-charge who has been certified by the SC Environmental Certification Board. Your facility has been classified in Group IV-P/C, necessitating an operator holding a Grade A-P/C or higher certificate. You will not be given permission to operate your facility until a properly qualified operator(s) has been obtained. Questions in this matter should be directed to William R. Moore, SC Environmental Certification Board, 2221 Devine Street, Suite 320, Columbia, SC 29205.

Sincerely,

Address of District Contact:
218 Beaufort Street, NE
Aiken, S.C. 29801

Marion F. Sadler, Jr., Acting Director
Industrial & Agricultural
Wastewater Division

MFS/LEA

recycled paper

South Carolina
DHEC
Department of Health and Environmental Control
2600 Bull Street
Columbia, SC 29201

Bureau of Water Pollution Control
Permit To Construct

F/H-Area

DRAFT

Permission is hereby granted to: Westinghouse Savannah River Co.
P.O. Box 616
Aiken, S.C.

for the construction of a wastewater treatment system in accordance with the construction plans, specifications, engineering report and Construction Permit Application signed by Richard L. Stegen, Ihor John Nyszczot, Richard Kowalski and John William Nelson, Registered Professional Engineers, S. C. Registration Numbers: 12633, 10901, 14077, and 4448 respectively.

Project Name: F and H-Area High-Level Radioactive Waste Tank Farms **County:** Aiken

Project Description: (See Attachment)

The wastewater generated at this facility will be sent to the F/H ETF, precipitate slurry and sludge will be sent to the DWPF, and decontaminated salt solution will be sent to the Z-Area Saltstone Manufacturing and Disposal Facility.

There is no direct discharge from this facility.

The effluent concentrations of those constituents the wastewater treatment system is designed to remove or reduce are as required by the receiving facilities.

Treatment System Classification: Group IV-PC.

Special Conditions: (See Attachment)

Permit Number: 17,-IW **Date of Issue:** January 8, 1993

Expiration Dates: Unless construction begins prior to January 8, 1994 and construction is completed prior to January 8, 1995 this permit will expire.

In accepting this permit, the owner agrees to the admission of properly authorized persons at all reasonable hours for the purpose of sampling and inspection.

THIS IS A PERMIT FOR CONSTRUCTION ONLY AND DOES NOT CONSTITUTE STATE DEPARTMENT OF HEALTH AND ENVIRONMENTAL CONTROL APPROVAL, TEMPORARY OR OTHERWISE, TO PLACE THIS SYSTEM IN OPERATION.

_____
Bureau of Water Pollution Control

Project Description

DRAFT

The construction of two wastewater storage and treatment facilities and associated transfer systems, one in F-Area the other in H-Area, designed to treat wastewater generated at the F-Area Separations Facility, H-Area Separations Facility, Equipment Decontamination/Repair Facility, F/H Effluent Treatment Facility, Defense Waste Processing Facility, Receiving Basin for Offsite Fuels and Resin Regeneration Facility.

The F-Area facility consists of the following equipment:

1. 22 tanks, eight of which are 720,000 gal Type I tanks, ten 1,300,000 gal Type III/IIIA tanks, and four are 1,300,000 gal Type IV tanks.
2. Two evaporator systems (242-F and 242-16F) each of which consists of an evaporator, condenser, mercury collection tank, cesium removal pump tank and column, overheads hold tanks, and overheads diverting tank (242-F only). The 242-F evaporator system also contains a waste concentrate transfer system.
3. Six (6) diversion boxes (FDB1, FDB2, FDB3, FDB4, FDB5, FDB6)
4. Three (3) pump pits (FPP1, FPP2, FPP3)
5. Associated pumps and piping.

The H-Area facility consists of the following equipment:

1. 27 tanks, four (4) of which are 720,000 gal Type I tanks, three (3) are 1,030,000 gal Type II tanks, sixteen (16) 1,300,000 gal Type III/IIIA tanks, and four (4) 1,300,000 gal Type IV tanks.
2. Three (3) evaporator systems (242-H, 242-16H, and 242-25H) each of which consists of an evaporator, condenser, mercury collection tank, cesium removal pump tank and column, and overheads hold tanks. The 242-H evaporator system also contains a waste concentrate transfer system.
3. Eight (8) diversion boxes (HDB1, HDB2, HDB3, HDB4, HDB5, HDB6, HDB7, HDB8)
4. Ten (10) pump pits (HPP1, HPP2, HPP3, HPP4, HPP5, HPP6, HPP7, HPP8, HPP9, HPP10)
5. In-Tank Precipitation Process consisting of:
   a. Two (2) Cross flow filters
   b. One (1) precipitate stripper column
   c. One (1) wash stripper column
   d. Two (2) hold tanks
6. Associated pumps and piping.

DRAFT

SPECIAL CONDITIONS

1. The permittee shall maintain at each permitted facility a complete Operations and Maintenance Manual for the waste treatment system. The manual shall be made available for on-site review during normal working hours. The manual shall contain operation and maintenance instructions for all equipment and appurtenances associated with the waste treatment system. The manual shall contain a general description of the treatment process(es), operating characteristics that will produce maximum treatment efficiency and corrective action to be taken should operating difficulties be encountered.

2. The permittee shall provide for the performance of routine daily treatment plant inspections by a certified operator of the appropriate grade. The inspections shall include, but are not limited to, areas which require a visual observation to determine efficient operations and for which immediate corrective measures can be taken using the O & M manual as a guide. All inspections shall be recorded and shall include the date, time and name of person making the inspection, corrective measures taken, and routine equipment maintenance, repair, or replacement performed. The permittee shall maintain all records of inspections at the permitted facility and the records shall be made available for on-site review during normal working hours.

3. The permittee shall develop and implement a Best Management Practices (BMP) plan to identify and control the discharge of significant amounts of oils and the hazardous and toxic substances listed in 40 CFR Part 117 and Tables II and III of Appendix D to 40 CFR Part 122. The plan shall include a listing of all potential sources of spills or leaks of these materials, a method for containment, a description of training, inspection and security procedures, and emergency response measures to be taken in the event of a discharge to surface waters or plans and/or procedures which constitute an equivalent BMP. Sources of such discharges may include materials storage areas; in-plant transfer, process and material handling areas; loading and unloading operations; plant site runoff; and sludge and waste disposal areas. The BMP plan shall be developed, and updated as necessary, in accordance with good engineering practices, shall be documented in narrative form, and shall include any necessary plot plans, drawings, or maps. The BMP plan shall be developed no later than six months after issuance of the final permit (or modification), shall be implemented no later than one year after issuance of the final permit (or modification). A Spill Prevention Control and Countermeasure (SPCC) plan may be used in lieu of a BMP plan if BMP requirements are satisfied. The BMP plan or its equivalent shall be maintained at the plant site and shall be available for inspection by EPA and Department personnel.

4. No chemicals (process or otherwise) shall be added to the waste tanks which will alter the composition of the F/H ETF effluent from that which was evaluated for the NPDES permit.

5. The addition (not replacement) of new piping and chemical feed systems, even though related to the F/H Tank Farm process, shall not be considered normal operation if the piping and/or feed systems are to be located outside the tank farm boundary.

6. New or replacement tanks must be approved by SCDHEC before installation and entry into service of the tank.

7. For new or replacement waste tank system components, an assessment shall be submitted annually within sixty days of the anniversary date of this permit for all components installed during the previous year.

8. The permittee shall at all times maintain the operating capacity of all tanks at a point below the lowest known crack or leak.

9. No tank that leaks or has leaked shall be used for waste receipt without prior approval from this Department.

10. Within 60 days from the effective date of this permit the Permittee shall submit to this office a report containing the QA/QC procedures followed during the installation of the liner extension on secondary containment.

11. The Permittee shall maintain contingency plans or emergency procedures in place to respond to any known emergency situation with the potential to negatively impact human health or the environment. The plans and/or procedures shall be updated as necessary to include new information or changing conditions.

12. On June 30, 1987 the permittee submitted a revised RCRA Part A permit application which included the high-level radioactive waste tank system(s) contained in this permit. After this office issues the wastewater construction and operating permits for this facility, the permittee should amend its RCRA Part A permit to delete the tank system(s).

13. For each F- and H-Area high level waste tank system(s) or component(s) installed or modified after the issuance of this permit, the permittee shall prepare and submit for SCDHEC approval, a wastewater construction permit application or application for a permit modification in accordance with applicable SCDHEC regulations. Replacement of individual components with identical items meeting secondary containment standards, as agreed upon by the permittee and this office, or localized repair of small sections of pipe shall not require permit modification. Replacement of components that do not meet the secondary containment standards may require permit modification.

14. For each F and H Area high level waste tank system or component installed after the effective date of this permit, the DOE shall prepare a written assessment, certified by a registered professional engineer, that the waste tank system or component has sufficient structural integrity and is acceptable for the storing or treating of hazardous and/or radioactive substances. No assessment shall be required for installation of ancillary equipment in an existing tank system where the installation of the ancillary equipment does not modify the secondary containment or structural integrity for the tank system. Furthermore, an assessment is not required for installation of ancillary equipment where the equipment matches the description(s) in the approved assessment(s) for the tank systems, such as for routine maintenance.

15. For new or replacement tanks, an assessment, as described in special condition number 16, shall be submitted by DOE and approved by SCDHEC before installation and entry into service of the tank. For new or replacement waste tank system components, the assessment shall be submitted annually. These assessments shall be submitted each year within sixty (60) days of the anniversary date of this permit for all components installed during the previous year.

16. The assessment(s) shall demonstrate that the foundation, structural support, seams, connections, and pressure controls (if applicable) are adequately designed and that the waste tank system(s) have sufficient structural strength, compatibility with the hazardous/radioactive substances to be stored or treated, and corrosion protection to ensure that the waste tank system(s) or component(s) will not collapse, rupture, or fail. At a minimum, the assessment(s) shall include the following:

1. The design/installation assessment for each tank system(s)/component(s) design shall include, at a minimum, the following information:

(a) Design standard(s) according to which tank(s) and/or the ancillary equipment are constructed;
(b) Hazardous characteristics of the hazardous and/or radioactive substance(s) to be handled;
(c) For new tank system(s)/component(s) in which the external shell of a metal tank or any external metal component(s) of the tank system(s) will be in contact with the soil or water, a determination by a corrosion expert of:

(i) Factors affecting the potential for corrosion, including but not limited to:

(A) Soil moisture content;
(B) Soil pH;
(C) Soil sulfides level;
(D) Soil resistivity;
(E) Structure to soil potential;
(F) Influence of nearby underground metal structures (e.g., piping);
(G) Existence of stray electric currents;
(H) Existing corrosion-protection measures (e.g., coating, cathodic protection), and

(ii) The type and degree of external corrosion protection that is needed to ensure the integrity of the tank system(s) during the use of the system(s) or component(s), consisting of one or more of the following:

(A) Corrosion-resistant materials of construction such as special alloys, fiberglass reinforced plastic, etc.;
(B) Corrosion-resistant coating (such as epoxy, fiberglass, etc.) with cathodic protection (e.g., impressed current or sacrificial anodes); and
(C) Electrical isolation devices such as insulating joints, flanges, etc.

(d) For underground tank system components that are likely to be adversely affected by vehicular traffic, a determination of design or operational measures that will protect the tank system against potential damage; and

(e) Design considerations to ensure that:

(i) Tank foundations will maintain the load of a full tank;
(ii) Tank systems will be anchored to prevent flotation or dislogment where the tank system is placed in a saturated zone, or is located within a seismic fault zone with has had displacement during the Holocene period; and
(iii) Tank systems will withstand the effects of frost heave.

2. The DOE shall ensure that proper handling procedures are adhered to in order to

prevent damage to tank system(s) or component(s) during installation. Prior to covering, enclosing, or placing a new tank system or component in use, a registered professional engineer who is trained and experienced in the proper installation of tank systems or components, shall inspect the system for the presence of any of the following items:

(a) Weld breaks;
(b) Punctures;
(c) Scrapes of protective coatings;
(d) Cracks;
(e) Corrosion;
(f) Other structural damage or inadequate construction or installation.

All such discrepancies shall be remedied before the tank system is covered, enclosed, or placed in use.

3. New tank system(s)/component(s) that are placed underground and that are backfilled shall be provided with a backfill material that is a noncorrosive, porous, homogeneous substance and that is installed so that the backfill is placed completely around the tank and compacted to ensure that the tank and piping are fully and uniformly supported.

4. All new tanks and ancillary equipment shall be tested for tightness prior to being covered, enclosed, or placed in use. If a tank system is found not to be tight, all repairs necessary to remedy the leak(s) in the system shall be performed prior to the tank system being covered, enclosed, or placed into use.

5. Ancillary equipment shall be supported and protected against physical damage and excessive stress due to settlement, vibration, expansion, or contraction.

6. The DOE shall provide the type and degree of corrosion protection recommended by a professional engineer or corrosion specialist, a person who is trained by experience or education to do the work, based on the information provided under 1(c), above, or other corrosion protection if the SCDHEC determines other corrosion protection is necessary to ensure the integrity of the tank system during use of the tank system. The installation of a corrosion protection system that is field fabricated shall be supervised by a registered professional engineer to ensure proper installation.

7. The DOE shall obtain and keep on file at the facility written statements by those persons required to certify the design of the tank system and supervise the installation of the tank system in accordance with the requirements of paragraph 1 through 6 of this section, that attest that the tank system was properly designed and installed and that repairs, pursuant to paragraphs 2 through 4 of this section, were performed.

17. The DOE shall submit to the SCDHEC for review and approval, a plan to provide secondary containment for all F- and H-Area high-level waste tank system(s) or component(s) installed or replaced after the effective date of this permit. This plan shall be submitted as a part of the wastewater construction permit application(s) required under condition 13 above.

18. The DOE shall install secondary containment system(s) that are (a) designed, installed, and operated to prevent any migration of hazardous or radioactive constituents, hazardous substances, or accumulated liquid out of the system(s) to the soil, groundwater, or

surface water at any time during the use of the waste tank system(s); and (b) capable of detecting and collecting releases and accumulated liquids until the collected material is removed. The DOE's secondary containment system(s) shall meet, at a minimum, the following standards:

1. At a minimum, secondary containment system(s) shall be:

   (a) Constructed of or lined with materials that are compatible with the hazardous or radioactive substance(s) to be placed in the tank system and shall have sufficient strength and thickness to prevent failure owing to pressure gradients (including static head and external hydrological forces), physical contact with the waste(s) or substances to which it is exposed, climatic conditions, and the stress of daily operation (including stresses from nearby vehicular traffic);
   (b) Placed on a foundation or base capable of providing support to the secondary containment system, resistance to pressure gradients above and below the system, and capable of preventing failure due to settlement, compression, or uplift;
   (c) Provided with a leak-detection system that is designed and operated so that it shall detect the failure of either the primary or secondary containment structure or the presence of any leak of hazardous or radioactive constituents, hazardous substances, or accumulated liquid in the secondary containment system within 24 hours, or at the earliest practicable time if the DOE can demonstrate that existing detection technologies or site conditions will not allow detection of a leak within 24 hours; and
   (d) Sloped or otherwise designed or operated to drain and remove liquids resulting from leaks or precipitation. Leaked substances and accumulated precipitation shall be removed from the secondary containment system within 24 hours, or in as timely a manner as is possible to prevent harm to human health and the environment, if the DOE can demonstrate that removal of the leaked substances or accumulated precipitation cannot be accomplished within 24 hours.
   (e) Secondary containment for tanks shall include one or more of the following devices:
      (i) a liner (external to the tank);
      (ii) a vault;
      (iii) a double-walled tank;
      (iv) an equivalent device approved by SCDHEC.
   (f) In addition to the above requirements, secondary containment systems shall satisfy the following requirements:

      (i) External liner systems shall be:

         (A) Designed or operated to contain 100 percent of the capacity of the largest tank within its boundary;
         (B) Designed or operated to prevent run-on or infiltration of precipitation into the secondary containment system unless the collection system has sufficient excess capacity to contain run-on or infiltration. Such additional capacity shall be sufficient to contain precipitation from a 25-year, 24-hour rainfall event;
         (C) Free of cracks or gaps; and
         (D) Designed and installed to surround the tank completely and to cover all surrounding earth likely to come into contact with the substances if the substances is released from the tank(s) (i.e., capable of preventing lateral as well as vertical migration of the substance(s)).

      (ii) Vault systems shall be:

(A) Designed or operated to contain 100 percent of the capacity of the largest tank within its boundary;
(B) Designed or operated to prevent run on or infiltration of precipitation into the secondary containment system unless the collection system has sufficient excess capacity to contain run-on or infiltration. Such additional capacity shall be sufficient to contain precipitation from a 25-year, 24-hour rainfall event:

(1) Constructed with chemical-resistant water stops in place at all joints (if any);
(2) Provided with an impermeable interior coating or lining that is compatible with the stored waste and that will prevent migration of waste into the concrete;

(C) Provided with a means to protect against the formation of and ignition of vapors within the vault, if the substances being stored or treated:

(1) Meets the definition of ignitable waste under 40CFR Section 262.21; or
(2) Meets the definition of reactive waste under 40CFR Section 262.21, and may form an ignitable or explosive vapors.

(D) Provided with an exterior moisture barrier or be otherwise designed or operated to prevent migration of moisture into the vault if the vault is subject to hydraulic pressure.

(iii) Double walled tanks shall be:

(A) Designed as an integral structure (i.e., an inner tank completely enveloped within an outer shell) so that any release from the inner tank is contained by the outer shell.

(B) Protected, if constructed of metal, from both corrosion of the primary tank interior and of the external surface of the outer shell; and

(C) Provided with a built-in continuous leak detection system capable of detecting a leak within 24 hours, or at the earliest practicable time, if the DOE can demonstrate that the existing detection technology or site conditions would not allow detection of a leak within 24 hours.

(iv) Ancillary equipment shall be provided with secondary containment (e.g., trench, jacketing, double-walled piping) that meet the requirements of this Agreement except for:

(A) Above ground piping (exclusive of flanges, joints, valves, and other connections) that are visually inspected for leaks on a daily basis;

(B) Welded flanges, welded joints, and welded connections, that are visually inspected for leaks on a daily basis;

(C) Sealless or magnetic coupling pumps, that are visually inspected for leaks on a daily basis; and

(D) Pressurized above ground piping systems with automatic shut-off devices (e.g., excess flow check valves, flow metering shutdown devices, loss of pressure actuated shut-off devices) that are visually inspected for leaks on a daily basis.

19. The requirements of conditions 17 and 18 do not apply to replacement of individual components where (a) the components are replaced with identical items (i.e. items that match the description in the permit); and (b) the design of the component being replaced has been previously addressed in a plan as required by condition 17 or the component has secondary containment systems that meet the secondary containment standards stated in condition 18.

20. For the purposes of the permit, a leak shall mean the escape from primary or secondary containment of any substance, including, but not limited to, sewage, industrial waste, water waste, air containment of any combination thereof in such quantity and of such characteristics and duration as may cause, or tend to cause the environment of the State of South Carolina to be contaminated, unclean, noxious, odorous, impure or degraded, or which is, or tends to be injurious to human health or welfare; or which damages property, plant, animal or marine life, or use of property.

21. For a waste tank system or secondary containment system from which there is or has been a leak, the DOE shall comply with the following standards:

1. For each tank system(s)/component(s) that is determined to be leaking, the DOE shall comply with the following requirements:

(a) The DOE shall immediately stop the flow of hazardous or radioactive substances into the tank system(s) or secondary containment system(s) and inspect the system(s) to determine the cause of the leak.

(b) If the leak was from the tank system to the environment, the DOE shall, within 24 hours after detection of the leak, or if the DOE demonstrates that it is not possible, at the earliest practicable time, remove as much of the hazardous/radioactive substance as is necessary to prevent further release of hazardous or radioactive substances to the environment and to allow inspection and repair of the tank system(s) to be performed.

(c) If the leak was to a secondary containment system(s), all accumulated materials shall be removed from the secondary containment system(s) within 24 hours or in as timely a manner as is possible to prevent harm to human health and the environment.

2. The DOE shall as soon as possible conduct a visual inspection of the leak and, based upon that inspection:

(a) Prevent further migration of the leak to soils or surface water; and

(b) Remediate any visible contamination of the soil or surface water.

3. Any release to the environment shall be reported to EPA and SCDHEC within 24 hours of its detection. If the release has been reported pursuant to 40CFR Part 302, such

report will satisfy this requirement.

4. Within thirty (30) days of detection of a release to the environment, a report containing the following information shall be submitted to EPA and SCDHEC:

   (a) Likely route of migration of the release;

   (b) Characteristics of the surrounding soil (soil composition, geology, hydrogeology, climate);

   (c) Results of any monitoring or sampling conducted in connection with the release (if available). If data are unavailable within 30 days, these data must be submitted as soon as they become available.

   (d) Proximity to downgradient drinking water, surface water, and populated areas; and

   (e) Description of response actions taken or planned.

5. Unless the DOE satisfies the requirements of paragraphs (a) through (c) of this condition, the tank system shall be removed from service in accordance with condition number 22.

   (a) If the cause of the release was a leak that has not damaged the integrity of the system, the DOE may return the system to service as soon as the release constituent/substance is removed and repairs, if necessary, are made.

   (b) If the leak was from the primary tank system into the secondary containment system, the system shall be repaired prior to returning the tank system to service, or the DOE must demonstrate, subject to the approval of SCDHEC that returning the system to service without repair would not threaten human health or the environment.

   (c) If the source of a release was a leak to the environment from a component of a tank system without secondary containment, the DOE shall provide the component of the system from which the leak occurred with secondary containment that satisfies the requirements specified in condition number 18 before it can be returned to service, unless the source of the leak is an above ground portion of a tank system that can be inspected visually. If the source of the leak is an above ground portion of a tank system that can be inspected visually, the component shall be repaired and may be returned to service without secondary containment as long as the requirements of paragraph (d) of this section are satisfied. If a component is replaced to comply with the requirements of this section, that component shall satisfy the requirements for new tank systems/components in special conditions 13, 14, 15, 16, 17, 18, and 19 of this permit. Additionally, if a leak has occurred in any portion of a tank system component that is not readily accessible for visual inspection (e.g., the bottom of an inground or onground tank), the entire component shall be provided with secondary containment in accordance with these requirements prior to being returned to use.

   (d) If the DOE has repaired a tank system in accordance with paragraph (5) of this condition, and the repair has been extensive (e.g., installation of an internal liner; repair of a ruptured primary containment or secondary containment vessel),

the tank system shall not be returned to service unless:

(1) The DOE has obtained a certification by a registered professional engineer that the repaired system is capable of handling hazardous/radioactive substances without release for the intended life of the system, and

(2) This certification is approved by SCDHEC.

22. The DOE shall submit to EPA and SCDHEC for review and approval, a plan(s) and schedule(s) that do not meet the secondary containment standards of conditions 17, 18, and 19 of this permit or that leak or have leaked. This plan(s) and schedule(s) shall be submitted and/or amended by DOE as follows:

(a) Within ninety (90) days of the effective date of this permit for tank system(s) or secondary containment system(s) known to leak or have leaked prior to the effective date of this permit that shall not be repaired in accordance with conditions 20 and 21;

(b) Within ninety (90) days of discovery of leaks from tank system(s) or secondary containment system(s) not known before the effective date of this permit that will not be repaired in accordance with conditions 20 and 21 of this permit; and

(c) Within ninety (90) days of receipt of written notification from SCDHEC of the determination that any waste tank system(s)/component(s) do not meet the secondary containment standards of conditions 17, 18, and 19 of this permit.

After approval of the schedule by EPA and SCDHEC, DOE shall remove the tanks from service according to the approved plan(s) and schedule(s). In lieu of the requirements of (c) above, DOE may submit a plan that meets the requirements of 17, 18, and 19 herein to provide secondary containment for substandard tank system(s)/component(s). Subject to the applicable requirements of this permit, the DOE may continue to use tanks systems/components scheduled to be removed from service for receipt and storage of waste according to the approved schedule and prior to approval of the schedule, unless SCDHEC notifies DOE in writing that specific tanks are unsuitable for continued service. Waste tanks deemed unsuitable by SCDHEC shall not receive additional waste prior to schedule approval for such receipt and only if waste receipt is approved as a part of the plan associated with such schedule.

23. The DOE's waste tank system(s) removal plan(s) shall provide for the removal or decontamination of all residues, contaminated containment system components (liners, etc.), contaminated soils and structures and equipment contaminated with hazardous and/or radioactive substances. if the DOE demonstrates that it cannot practicably remove or decontaminate soils or structures and equipment, then the DOE shall conduct all necessary response actions required under RCRA for those waste tank system(s).

24. The DOE shall submit to EPA and SCDHEC an annual report on the status of tanks being removed from service under condition 22 of this permit. This report will include any requests, subject to review and approval, for changes to the existing plan(s) and schedule(s) approved under condition 22. This annual report shall be submitted in conjunction with the assessments submitted under condition 16 herein.

25. For waste tank system(s) that DOE decides to remove from service that have been issued

an industrial wastewater permit under the PCA, the DOT shall remove such waste tank system(s) from service in accordance with the Pollution Control Act, S.C. Code Ann., Section 48-1-10, et seq. (1985) and all applicable regulations promulgated pursuant to the PCA. For any waste tank system(s) for which closure or removal from service is or has been conducted under the PCA, the DOE shall conduct all applicable activates required under the NCP.

W-0517

INTER-OFFICE MEMORANDUM
Savannah River Site

Date: 08-Jan-1993 03:03pm EST
From: Chuck Hayes
HAYES-CR-Z9722
Dept: EPD
Tel No: X58838

TO: See Below

Subject: TF WASTEWATER PERMIT STATUS UPDATE (U)

Matt,

As you know, SCDHEC presented us with a DRAFT copy of the wastewater permit today (1/8). I am leaving it up to you to distribute copies to the pertinent folks on your side for review. I think it is important to note that this is the first time EVER that SCDHEC has let us see a draft copy of a wastewater permit for review prior to formal issue. Please be aware that some additional special conditions (FFA related) are forthcoming 1/11 or 1/12. I also think it is very important to respond to SCDHEC with comments ASAP (i.e. by 1/13).

Regarding the drawings that SCDHEC identified as needing to be PE stamped, they have agreed to let us provide these at the final inspection. Please be thinking about a timeframe for which these can be provided.

Please contact me by 1/11 to discuss the path forward.

Distribution:

TO:	Matthew A. Hunter	(HUNTER-MA-L2335 @A1@SASRS2)
CC:	Chris J. Baker	(BAKER-CJ-B4996 @A1@SRXSS2)
CC:	D T BIGNELL	(BIGNELL-DT-O5579)
CC:	Cynthia Blair-McManus	(BLAIR_MCMANUS-C-B8534 @A1@SASRS
CC:	Douglas M. Blue	(BLUE-DM-L4808 @A1@SRXSS2)
CC:	W. Brent Boore	(BOORE-WB-O6688 @A1@SASRS2)
CC:	SUSAN S. CATHEY	(CATHEY-SS-O4949 @A1@SASRS2)
CC:	Herbert L. Davis	(DAVIS-HL-B8758 @A1@SASRS3)
CC:	V.G. Dickert	(DICKERT-VG-O4857 @A1@SASRS2)
CC:	W. DANNY DUNAWAY	(DUNAWAY-WD-O7436)
CC:	Eddie R. Ennis	(ENNIS-ER-Y6279 @A1@SRXSS2)
CC:	TIMOTHY P. GAUGHAN	(GAUGHAN-TP-O8815 @A1@SASRS2)
CC:	Ann R. Gough	(GOUGH-AR-Y5417)
CC:	MONTE HAWKINS	(HAWKINS-M-O6779)
CC:	Brenda L. Lewis	(LEWIS-BL-O6503 @A1@SASRS2)
CC:	BRUCE LAWRENCE	(LAWRENCE-BM-O4037)
CC:	TOM MONAHON	(MONAHON-TM-O4411 @A1@SRXSS2)
CC:	J. V. ODUM	(ODUM-JV-O4184)

2

CC:	Roger K. Roosa	(ROOSA-RK-L4532 @A1@SASRS2)
CC:	Rod M. Satterfield	(SATTERFIELD-RM-T3212)
CC:	Margaret G. Schwenker	(SCHWENKER-MG-B7657 @A1@SASRS3)
CC:	Gerry F. Stejskal	(STEJSKAL-GF-Y6594)
CC:	CARY B. STEVENS	(STEVENS-CB-O5981 @A1@SASRS2)
CC:	Kim S. Wierzbicki	(WIERZBICKI-KS-O6535 @A1@SASRS2
CC:	Robert W. Wilson	(WILSON-RW-T4847 @A1@SASRS2)
CC:	Kathy Z. Wolf	(WOLF-KZ-O9884 @A1@SASRS2)
CC:	Todd Wright	(WRIGHT-GT-T6181 @A1@SASRS2)

WSRC-EPD Telecon Record

W-0517
TR File

Subject Title : Wastewater Permitting ***Date:*** 1/7/93 ***Time:***

Purpose: To update permitting status of the F/H Tank Farms

Call Made By: L. E. Arrington

Person(s) Contacted: C. R. Hayes CR Hayes

Discussion Notes:

Caller	Respondent
When Carl and I met with Marion on issuing the construction permit, Marion felt that some of the drawings in the permit application package needed to be PE stamped. The drawings are as follows: • 4 layout drawings in section 2 (IAL layouts) • 2 Waste Transfer System drawings • Drawing Nos. W2020288, W2020289, W2020290 and W2020291 (these are the most critical)	We will look into this and get a response back to you.
I will discuss this possibility with Carl and Marion and get back to you.	Is it possible, since we are so close to signing the FFA and subsequently getting the permit, to provide these as "as-builts" at the final inspection? The FFA looks like it definitely will be signed over the next week or two.
Also, I hope to get you a draft copy of the permit conditions (as if the FFA not signed) tomorrow. That is if Ann Reagan and company have no problems with their contents.	I am looking forward to it.

Additional Actions Needed:
SCDHEC to meet and get back with EPD.

Distribution:

L. S. Coward, 703-18A (W-0517)
W. D. Dunaway, 703-18A
P. D. D'Entremont, 703-H
M. A. Hunter, 742-6G
A. R. Gough, 992-3W
J. V. Odum, 742-A
C. B. Stevens, 742-6G
K. S. Wierzbicki, 742-6G
H. L. Davis, 703-41A
J. E. Bolen, 703-41A

W-0517

Westinghouse Savannah River Company

Don't Say It-Write It

12/22/92

To: D. R. Morris, 742-A

From: R. K. Cauthen, 703-18A
(X5-9004)

PFSG Comments On Draft SRS D&D Program Plan - Volume 2 (U)

Don, per your request Chuck Hayes and I have reviewed the document and offer the following comments. I also asked Jill Suhm of FSS to lend her perspective on the plan and those comments will be forwarded to you when she finishes her review.

- ◊ In the preface on the graphics page labeled "DOCUMENT HIERARCHY" should permits or permit packages be included?

- ◊ Page 3 (unmarked) of the preface. Based on current understanding of the process the facilities will be turned over to the DOE EM-60 organization after being declared to be surplus. It appears that the operating custodial organization will remain as the custodians throughout this "transition period". Therefore the next to the last paragraph on that page should indicate that the facilities will undergo this transition period prior to being turned over to D&D.

- ◊ page 2 first bullet Should the word decontamination be included as an activity?

- ◊ page 5 Asbestos Containment Abatement Program This discussion indicates that the site is out of compliance with regard to asbestos. I am not familiar with any non-compliances from the NESHAPS point of view. If there is one that actually exists the non-compliance probably should be identified.

2

◊ page 6 Higher Risk Facilities... Should regulatory compliance or risk from non rad pollutants be included?

◊ page 9 Basic Assumptions (1) should not the DOE criteria be used instead of commercial standards?

cc: Chuck Hayes, 703-18A
Jill Suhm, 742-A

W-0517

OSR 3-4A-W (Rev 1-89)

WESTINGHOUSE SAVANNAH RIVER COMPANY

INTER-OFFICE MEMORANDUM

WER-HLE-921266

December 18, 1992

To: K. S. Wierzbicki, 742-6G

From: M. A. Hunter, 742-6G

Need for Wastewater Permit Prior to Restart of the 1H Evaporator (U)

In November 1988, the 242-1H was shut down to correct problems associated with the Concentrate Transfer System (CTS) ventilation system and has not been restarted due to additional identified problems. Currently, the 1H evaporator lacks adequate secondary containment for the overheads lines and the evaporator feed tank (Tank 13) has cracks in the primary shell. For these reasons, the 242-1H evaporator system is out of compliance with the Resource Conservation and Recovery Act (RCRA) regulations for the operation of a treatment, storage and disposal facility.

The tank farms have been included on the site Part A permit since they were identified as handling hazardous waste. These facilities were granted interim status on June 30, 1987. The South Carolina Department of Health and Environmental Control (SCDHEC) and the Environmental Protection Agency (EPA) are aware of the deficiencies, though a Notice Of Violation (NOV) has never been issued. SCDHEC, the governing authority, has stated that a NOV would not be issued if WSRC were to restart the evaporator. However, SCDHEC is not willing to give written permission for the restart.

Due to recent changes in the regulatory environment, the required criteria for the restart have been readdressed. This assessment has taken into account the current permitting status of the F/H Area Tank Farms and the potential risk involved in restarting a system which lacks adequate secondary containment. In the past, the position was taken that the signing of the Federal Facility Agreement (FFA) would provide adequate coverage for the legal liability involved in the restart. However, the current regulatory environment has forced a more conservative assessment of the situation. Under RCRA regulation (R.61-79.265.1(c)(3)), the issuance of a wastewater operating permit allows the operation of a facility to be withdrawn under from RCRA authority. Therefore, the signing of the FFA does not ensure relief from RCRA liability unless a wastewater operating permit has been issued. Only the wastewater permit will allow for the withdrawal of the tank farms from the RCRA Part A application and provide relief from legal liability. The 242-1H evaporator should not be restarted until the wastewater operating permit is approved.

CC: G. T. Wright, 703-H
R. M. Satterfield, 719-4A
W. B. Boore, 719-4A
S. S. Cathey, 703-H
T. M. Monahon, 703-H
R. K. Roosa, 703-H
R. W. Wilson, 703-H
K. F. Lesko, 703-H
V. G. Dickert, 703-F
W. A. Morrison, 703-F
M. N. Stresemann, 703-H
A. S. Greer, 241-102H
I. K. Sullivan, 241-84H
E. Ennis, 241-120H
B. L. Lewis, 703-H
M. S. Peters, 703-F
C. B. Stevens, 742-6G

TR File
W-0517

WSRC-EPD Telecon Record

Subject Title : Wastewater Permitting *Date:* 12/15/92 *Time:* _____

Purpose: To obtain permitting status of the F/H Tank Farms

Call Made By: C. R. Hayes

Person(s) Contacted: L. E. Arrington

Discussion Notes:

Caller

Did you get a chance to meet with the other persons within DHEC to determine path forward on issuing the construction permit?

Respondent

• Carl and I met with David Wilson. David felt that since the FFA had been signed by EPA and SCDHEC, it was ok for Industrial Wastewater (IWW) to proceed with the permit.

• We feel that ERF (Brian Costner, etc.) concerns are adequately handled through the FFA. Therefore at this point, we feel no need to put the permit out for public comment.

• Carl and I still need to meet with Ann Reagan and Lewis Bedenbaugh before proceeding. The purpose is to discuss some of our collective concerns before proceeding. At this point we need no input from SRS. This may change, however.

• At this point we are also planning to proceed without EPA input.

We hope to be able to let you know something by the end of this week (12/18).

Additional Actions Needed:

SCDHEC to meet internally before responding to SRS.

Distribution:

L. S. Coward, 703-18A (PFSG-File)
W. D. Dunaway, 703-18A
P. D. D'Entremont, 703-H
M. A. Hunter, 742-6G
J. V. Odum, 742-A
G. F. Stejskal, 742-A
K. S. Wierzbicki, 742-6G
C. B. Stevens, 742-6G
H. L. Davis, 703-41A
J. E. Bolen, 703-41A
W-0517

INTER-OFFICE MEMORANDUM
Savannah River Site

Date: 09-Dec-1992 04:16pm EST
From: Matthew A. Hunter
HUNTER-MA-L2335 AT A1 AT SASRS2
Dept: WMRC
Tel No: 557-0520/bp#6761

TO: See Below

Subject: RE: TANK FARM WW PERMIT

I am not advocating a position paper. Essentially, after we receive a construction permit, we will need to notify DHEC of any modifications made since the application was submitted. This notification should be given in writing and all likelyhood DHEC will request additional information on the extent of the modifications. What I suggest is that head them off and prepare a package of information on the changes made to the 2F. That way we won't have to scramble to put something together. This is the same approach as Randy discussed with you except that we will have something in our back pocket.

If you have any questions, please contact me.

Distribution:

TO:	V.G. Dickert	(DICKERT-VG-O4857 AT A1 AT SASRS2)
CC:	Chuck Hayes	(HAYES-CR-Z9722 @A1@SLSRP1)
CC:	Kim S. Wierzbicki	(WIERZBICKI-KS-O6535 AT A1 AT SASRS2)
CC:	Mark S. Peters	(PETERS-MS-O5010 AT A1 AT SASRS2)
CC:	Johnna E. Griffiths	(GRIFFITHS-JE-Y5542 AT A1 AT SASRS2)
CC:	Robert W. Wilson	(WILSON-RW-T4847 AT A1 AT SASRS2)
CC:	Mario A. Ceravolo, 703-H	(CERAVOLO-MA-O7495 AT A1 AT SASRS2)
CC:	Thomas B. Caldwell	(CALDWELL-TB-Y6683 AT A1 AT SASRS2)
CC:	Brenda L. Lewis	(LEWIS-BL-O6503 AT A1 AT SASRS2)
C:	CARY B. STEVENS	(STEVENS-CB-O5981 AT A1 AT SASRS2)

2

INTER-OFFICE MEMORANDUM
Savannah River Site

Date: 01-Dec-1992 05:02pm EST
From: Matthew A. Hunter
HUNTER-MA-L2335 AT A1 AT SASRS2
Dept: WMRC
Tel No: 557-0520/bp#6761

TO: See Below

Subject: 2F Modification and the WW Permit

In the wastewater permit application for the tank farms, the evaporators are designated as to receipt of High or Low Heat Waste and it also talks about the design of each evaporator. It says that the design for all four are similar but does not address each's ability to handle either waste.

In order to have the 2F's disignation changed from Low to High Heat Waste, we need to prepare a memo to DHEC with an abbreviated information package on the changes that will be made. This package should point out any difference with the application. Since the application is fairly general, this should not require much. I am willing to work with you as much as needed to put the package and memo together. For a headstart please see the information in the application (Section 4.4 and specifically 4.4.3). The appropriate time to make these nofications to the wastewater permit is anytime after the granting of a construction permit and preferably before the issuance of an operating permit. One last thing, any changes that would change the integrity of the containment may require a PE certification.

Please contact me if you have any questions.

Distribution:

TO:	Johnna E. Griffiths	(GRIFFITHS-JE-Y5542 AT A1 AT SASRS2)
CC:	Chuck Hayes	(HAYES-CR-Z9722 @A1@SLSRP1)
CC:	Kim S. Wierzbicki	(WIERZBICKI-KS-O6535 AT A1 AT SASRS2)
CC:	Thomas B. Caldwell	(CALDWELL-TB-Y6683 AT A1 AT SASRS2)
CC:	CARY B. STEVENS	(STEVENS-CB-O5981 AT A1 AT SASRS2)
C:	Mark S. Peters	(PETERS-MS-O5010 AT A1 AT SASRS2)

INTER-OFFICE MEMORANDUM
Savannah River Site

Date: 08-Dec-1992 10:30am EST
From: Matthew A. Hunter
HUNTER-MA-L2335 AT A1 AT SASRS2
Dept: WMRC
Tel No: 557-0520/bp#6761

TO: Chuck Hayes (HAYES-CR-Z9722 @A1@SLSRP1)

CC: CARY B. STEVENS (STEVENS-CB-O5981 AT A1 AT SASRS2)

Subject: Whadda You Think?

Chuck,

Whadda ya think? Johnna Griffiths asked me for a memo on the redesignation of the 2F Evaporator to High Heat Waste service. Mark Peters, her manager, has asked if we need to really designate the evaporator one way or another. How about an EPD interpretation. What every you say, we'll go by.

Thanks
>Matt

2

INTER-OFFICE MEMORANDUM
Savannah River Site

Date: 08-Dec-1992 08:31am EST
From: Mark S. Peters
PETERS-MS-O5010 AT A1 AT SASRS2
Dept: WMP
Tel No: 7-8872

TO: See Below

Subject: TANK FARM WW PERMIT

From M. A. Hunter's memo (attached), I get the impression that: 1) SCDHEC needs to be notified of the specific waste type that is being processed through the evap. and approves the evap. designation, 2) the WW Permit states that only one type (ex. HHW, LHW, evap O/Hs, tritiated water, lab trailers, ect.) of waste is processed through the evaporator at a time, and 3) we are changing the 2F evap. system in order to process HHW.

The 2F evap is not set-up to specifically process one waste type at a time. At any given time the feed to the 2F will be a mixture of several waste types. One type of waste may predominate but all waste streams that enter F-Tank must go to tank 26 for processing through the 2F evap.

The evap. system equipment (feed pump, evap. vessel, transfer jets, drop valves, pump tanks, ect.) does not change with the various waste types that are processed.

In the permit the 2F (maybe all evaps.) should be designated as processing/handling all waste types and mixtures at all times.

We shouldn't have to change the evap. designation from LHW to HHW. It should already be designated as covering all waste streams.

Please review my comments and let me know what you think.

Distribution:

TO:	CARY B. STEVENS	(STEVENS-CB-O5981 AT A1 AT SASRS2)
CC:	Matthew A. Hunter	(HUNTER-MA-L2335 AT A1 AT SASRS2)
CC:	Johnna E. Griffiths	(GRIFFITHS-JE-Y5542 AT A1 AT SASRS2)
CC:	Robert W. Wilson	(WILSON-RW-T4847 AT A1 AT SASRS2)
CC:	V.G. Dickert	(DICKERT-VG-O4857 AT A1 AT SASRS2)
CC:	Mario A. Ceravolo, 703-H	(CERAVOLO-MA-O7495 AT A1 AT SASRS2)
CC:	Thomas B. Caldwell	(CALDWELL-TB-Y6683 AT A1 AT SASRS2)
C:	Brenda L. Lewis	(LEWIS-BL-O6503 AT A1 AT SASRS2)

3

INTER-OFFICE MEMORANDUM
Savannah River Site

Date: 01-Dec-1992 05:02pm EST
From: Matthew A. Hunter
HUNTER-MA-L2335 AT A1 AT SASRS2
Dept: WMRC
Tel No: 557-0520/bp#6761

TO: See Below

Subject: 2F Modification and the WW Permit

In the wastewater permit application for the tank farms, the evaporators are designated as to receipt of High or Low Heat Waste and it also talks about the design of each evaporator. It says that the design for all four are similar but does not address each's ability to handle either waste.

In order to have the 2F's disignation changed from Low to High Heat Waste, we need to prepare a memo to DHEC with an abbreviated information package on the changes that will be made. This package should point out any difference with the application. Since the application is fairly general, this should not require much. I am willing to work with you as much as needed to put the package and memo together. For a headstart please see the information in the application (Section 4.4 and specifically 4.4.3). The appropriate time to make these nofications to the wastewater permit is anytime after the granting of a construction permit and preferably before the issuance of an operating permit. One last thing, any changes that would change the integrity of the containment may require a PE certification.

Please contact me if you have any questions.

Distribution:

TO:	Johnna E. Griffiths	(GRIFFITHS-JE-Y5542 AT A1 AT SASRS2)
CC:	Chuck Hayes	(HAYES-CR-Z9722 @A1@SLSRP1)
CC:	Kim S. Wierzbicki	(WIERZBICKI-KS-O6535 AT A1 AT SASRS2)
CC:	Thomas B. Caldwell	(CALDWELL-TB-Y6683 AT A1 AT SASRS2)
CC:	CARY B. STEVENS	(STEVENS-CB-O5981 AT A1 AT SASRS2)
C:	Mark S. Peters	(PETERS-MS-O5010 AT A1 AT SASRS2)

INTER-OFFICE MEMORANDUM
Savannah River Site

Date: 02-Dec-1992 01:06pm EST
From: PAUL D. D'ENTREMONT
D'ENTREMONT-PD-O5438 AT A1 AT SASRS2
Dept: WMT
Tel No: 78727

TO: See Below

Subject: RE: Acceptance of Newly Generated LDR Waste into HTF

Brenda,

Just to clarify one point. I checked DPSOL-241-FH-7TQ. It DOES NOT allow the facility manager to approve transfers of Post-FFCA LDR waste to tank 13. The procedure allows transfers of this waste only to type III tanks, and not to type II tanks (tank 13 is a type II tank). Also, transfers of post-FFCA LDR waste to type III tanks that do not already contain it requires facility maanger approval.

However, the procedure would allow the facility managers to spread post-FFCA LDR waste around the tank farm if they approved LDR-waste transfers indiscriminately. This could cause scheduling problems down the road but wouldn't cause a regulatory problem. I'm sure the facility managers are aware of this concern and would not approve such transfers without a compelling reason.

Matt,

I was surprised to see you say that only tank 39 contained post-FFCA LDR waste. What about the high-heat waste receipt tank in F area? Also, have you received confirmation from the canyon that we didn't get any LDR waste in low-heat waste?

Distribution:

TO:	Brenda L. Lewis	(LEWIS-BL-O6503 AT A1 AT SASRS2)
CC:	Matthew A. Hunter	(HUNTER-MA-L2335 AT A1 AT SASRS2)
CC:	Jack S. Roberts [ENV PROT]	(ROBERTS-JS-O5782 @A1@SLSRP1)
CC:	J. V. ODUM	(ODUM-JV-O4184 @A1@SLSRP1)
CC:	TIMOTHY P. GAUGHAN	(GAUGHAN-TP-O8815 AT A1 AT SASRS2)
CC:	Chris J. Baker	(BAKER-CJ-B4996 @A1@SRXSS2)
CC:	Eddie R. Ennis	(ENNIS-ER-Y6279 @A1@SRXSS2)
CC:	V.G. Dickert	(DICKERT-VG-O4857 AT A1 AT SASRS2)
CC:	BRUCE LAWRENCE	(LAWRENCE-BM-O4037 @A1@SLSRP1)
CC:	Chuck Hayes	(HAYES-CR-Z9722 @A1@SLSRP1)
CC:	Roger K. Roosa	(ROOSA-RK-L4532 AT A1 AT SASRS2)
CC:	TOM MONAHON	(MONAHON-TM-O4411 @A1@SRXSS2)
CC:	Karen F. Lesko	(LESKO-KF-O7041 AT A1 AT SASRS2)
CC:	Robert W. Wilson	(WILSON-RW-T4847 AT A1 AT SASRS2)
CC:	Dot Matthews	(MATTHEWS-DL-W0643 AT A1 AT SASRS2)

2

INTER-OFFICE MEMORANDUM
Savannah River Site

Date: 02-Dec-1992 06:56am EST
From: Brenda L. Lewis
LEWIS-BL-O6503 AT A1 AT SASRS2
Dept:
Tel No: x7-8720 Beeper 1014

TO: See Below

Subject: RE: Acceptance of Newly Generated LDR Waste into HTF

IS THE PROCEDURE CLEAR ON WHAT THE RISKS THE FM IS TAKIN BY ALLOWING A DEVIATION FROM THE PROCEDURE BY HIS APPROVAL? I THINK ADDITIONAL APPROVAL BY ENGINEERING MAY BE NEEDED.

JEFF ARE YOU VERIFYING COMPLIANCE WITH THIS REQUIREMENT WHEN YOU APPROVE TRANSFERS?

Distribution:

TO:	Matthew A. Hunter	(HUNTER-MA-L2335 AT A1 AT SASRS2)
CC:	Mark S. Peters	(PETERS-MS-O5010 AT A1 AT SASRS2)
CC:	Thomas B. Caldwell	(CALDWELL-TB-Y6683 AT A1 AT SASRS2)
CC:	Michael W. Lewis	(LEWIS-MW-O3712 AT A1 AT SASRS2)
CC:	Michael C. Chandler	(CHANDLER-MC-O6868 AT A1 AT SASRS2)
CC:	Jeff Pike	(PIKE-JA-Y5547 AT A1 AT SASRS2)
CC:	Mario A. Ceravolo, 703-H	(CERAVOLO-MA-O7495 AT A1 AT SASRS2)
CC:	Kim S. Wierzbicki	(WIERZBICKI-KS-O6535 AT A1 AT SASRS2)
CC:	CARY B. STEVENS	(STEVENS-CB-O5981 AT A1 AT SASRS2)
CC:	Todd Wright	(WRIGHT-GT-T6181 AT A1 AT SASRS2)
CC:	SUSAN S. CATHEY	(CATHEY-SS-O4949 AT A1 AT SASRS2)
CC:	Robert W. Wilson	(WILSON-RW-T4847 AT A1 AT SASRS2)
CC:	Karen F. Lesko	(LESKO-KF-O7041 AT A1 AT SASRS2)
CC:	TOM MONAHON	(MONAHON-TM-O4411 @A1@SRXSS2)
CC:	PAUL D. D'ENTREMONT	(D'ENTREMONT-PD-O5438 AT A1 AT SASRS2)
CC:	Roger K. Roosa	(ROOSA-RK-L4532 AT A1 AT SASRS2)
CC:	Chuck Hayes	(HAYES-CR-Z9722 @A1@SLSRP1)
CC:	BRUCE LAWRENCE	(LAWRENCE-BM-O4037 @A1@SLSRP1)
CC:	V.G. Dickert	(DICKERT-VG-O4857 AT A1 AT SASRS2)
CC:	Eddie R. Ennis	(ENNIS-ER-Y6279 @A1@SRXSS2)
CC:	Chris J. Baker	(BAKER-CJ-B4996 @A1@SRXSS2)
CC:	TIMOTHY P. GAUGHAN	(GAUGHAN-TP-O8815 AT A1 AT SASRS2)
CC:	J. V. ODUM	(ODUM-JV-O4184 @A1@SLSRP1)
C:	Jack S. Roberts [ENV PROT]	(ROBERTS-JS-O5782 @A1@SLSRP1)

3

INTER-OFFICE MEMORANDUM
Savannah River Site

Date: 30-Oct-1992 12:35pm EST
From: Matthew A. Hunter
HUNTER-MA-L2335 AT A1 AT SASRS2
Dept: WMRC
Tel No: 70520

TO: See Below

Subject: Acceptance of Newly Generated LDR Waste into HTF

One of the commitments in the FFCA (Section V.6) is not to place any "Newly Generated" LDR waste into Tanks 13, 21, 22, and 23, due to inadequacies in secondary containment. For the purposes of HLW, newly generated LDR waste is waste from the separations canyons produced after March 13, 1991. Westinghouse's position on Tanks 21 - 23 is that new LDR waste is not generated by the processing of waste currently in the tank farm inventories. The waste streams associated with ITP, ESP, evaporation and DWPF/LW would not be considered newly generated waste. These tanks will be covered by a Westinghouse position paper. This position paper is currently in draft form and once approved will be transmitted to EPA. The EPA has agreed to this position in previous discussions, however per advice from the General Council, written concurrence will now be requested. In order to ensure that this commitment was not violated, the procedure for approval of waste transfers (241-FH-7TQ) was modified shortly after the signing of the FFCA to prohibit the transfer of new LDR waste into these tanks. Step 4.2.2 of this procedure only allows transfers of waste into Type III tanks that currently contain new LDR waste (eg., only Tank 39). Transfers from Tank 39 into Type III tanks that do not contain new LDR waste can only be made with the permission of the Facility Manager. This procedure does not allow transfers into Type I, II or IV tanks. Therefore, Tank 13 has the potential to receive new LDR waste. Receipt of newly generated LDR waste into Tank 13 is prohibited by the procedure unless Facility Manager approval is received.

The current status of new LDR waste that has the potential to be transferred into Tank 13 has been verified by HLWE and WMRC. This was done by reviewing the transfer data for the F and H Area Tank Farms waste receipts since March, 1991. Only Tank 39 has been used as a High Heat Waste receipt tank since March 13, 1991. No transfers from Tank 39 have occurred since the "new" LDR waste was received (May 20, 1991). The 241-FH-7TQ procedure must be followed to ensure that the waste currently in Tank 39 and any new waste from the canyons, continue to be tracked so that it is not placed into Tank 13. This commitment will be in effect until the FFA is signed. Relief from this requirement can also be granted through the submittal of demonstrations to the EPA, "showing that the secondary containment and leak detection for specific tanks that do not meet 40 CFR Part 264 standards are adequate for preventing environmental releases. Such demonstrations shall be limited to high-level radioactive waste tanks numbered 13, 21, 22, and 23." (FFCA V.6) This submittal is currently being pursued by WMRC. However the signing of the FFA would circumvent this submittal. Presently, the signing of the FFA appears promising.

Distribution:

TO: CARY B. STEVENS (STEVENS-CB-05981 AT A1 AT SASRS2)
TO: Kim S. Wierzbicki (WIERZBICKI-KS-06535 AT A1 AT SASRS2)

CC:	Jack S. Roberts [ENV PROT]	(ROBERTS-JS-O5782 @A1@SLSRP1)
CC:	J. V. ODUM	(ODUM-JV-O4184 @A1@SLSRP1)
CC:	TIMOTHY P. GAUGHAN	(GAUGHAN-TP-O8815 AT A1 AT SASRS2)
CC:	Chris J. Baker	(BAKER-CJ-B4996 @A1@SRXSS2)
CC:	Eddie R. Ennis	(ENNIS-ER-Y6279 @A1@SRXSS2)
CC:	V.G. Dickert	(DICKERT-VG-O4857 AT A1 AT SASRS2)
CC:	BRUCE LAWRENCE	(LAWRENCE-BM-O4037 @A1@SLSRP1)
CC:	Chuck Hayes	(HAYES-CR-Z9722 @A1@SLSRP1)
CC:	Roger K. Roosa	(ROOSA-RK-L4532 AT A1 AT SASRS2)
CC:	PAUL D. D'ENTREMONT	(D'ENTREMONT-PD-O5438 AT A1 AT SASRS2)
CC:	Brenda L. Lewis	(LEWIS-BL-O6503 AT A1 AT SASRS2)
CC:	TOM MONAHON	(MONAHON-TM-O4411 @A1@SRXSS2)
CC:	Karen F. Lesko	(LESKO-KF-O7041 AT A1 AT SASRS2)
CC:	Robert W. Wilson	(WILSON-RW-T4847 AT A1 AT SASRS2)
CC:	Dot Matthews	(MATTHEWS-DL-W0643 AT A1 AT SASRS2)
C:	Ginny Ellis	(ELLIS-VE-W0928 AT A1 AT SASRS2)

W-0517

BECHTEL SAVANNAH RIVER, INC.

INTEROFFICE MEMORANDUM

92-016337
DEC 02 1992

November 30, 1992

TO: Mark Reimnitz - 703-H

FROM: Phil Schuetz - 966-W B20-002

WORK AUTHORIZATION: WP213322
TANK 21, 22, AND 23 TRANSFER LINE LEAK DETECTION STUDY (U)

This memo provides conceptual design sketches, order of magnitude cost estimates, and schedules to provide jacket leak detection capabilities for the Tank 21, 22 and 23 transfer lines to/from HDB-5. The following three (3) scenarios were considered in this study:

1) Installation of a Valve Box with leak detection and pressure testing capabilities for the transfer lines at Tank 21 only. This is currently part of the S-2081 Scope of Work.

2) Scenario 1 plus leak detection modifications for the transfer lines at Tanks 22 and 23.

3) Scenario 2 plus pressure testing capability modifications for the transfer lines at Tanks 22 and 23.

The design of the valve box at Tank 21 is already in the S-2081 Scope of Work. The only new items for Tank 21 would be the leak detection box and the jacket seal plate on the line going into the tank.

The transfer lines from the transfer pump to the valve box on Tanks 21 & 22 have a low point which drains into the tank via a 1" drain line. For leak detection modifications only, Design Engineering recommends leaving this portion of the system as is. The only drawback would be that a small leak in these 8 foot regions would not be detected, however, a significant leak would fill the jacket and spill over into the valve box and be detected. To provide pressure testing capability modifications to this line, the drain line will need to be cut and capped and provided with some other means (to be determined) of removing waste from the low point.

How small is small

DESCRIPTION OF SKETCHES

Sketch 213322-01 shows the as-is condition of the transfer line system. There is an existing valve box with leak detection which alarms in the 241-74H Control Room for

Tank 22. The transfer line jackets are not pressure testable and the lines sloping towards Tanks 21, 22, and 23 do not have leak detection capabilities.

Sketches 213322-02 (Option #1) and 213322-03 (Option #2) show modifications required to provide leak detection capabilities and pressure testability for the Tank 21 valve box only. These two options vary in that Option #1 would drain the jacket into a new LDB and Option #2 would drain the jacket into the new valve box to provide leak detection. Both options would alarm in the 241-1H Control Room. This work is already covered in the Project S-2081 Scope of Work excluding the new seal plate and leak detection box on the line into the tank.

Sketch 213322-04 (Option #3) shows modifications required to provide only leak detection to the transfer lines to Tanks 22 & 23. Each of the two tanks will require one new LDB which would alarm in the 241-1H Control Room.

Sketch 213322-05 (Option #4) shows modifications required to provide leak detection and pressure testability to the transfer lines to Tanks 22 & 23. Tank 22 will require four seal plates, two LDBs, and two drain line plug assemblies. Tank 22 also has a 1" jacket drain which will need to be cut and capped and provided with some other means of removing waste from the low point. Tank 23 will require a new seal plate and one new LDB. Both tanks would alarm in the 241-1H Control Room.

The following table shows the total order of magnitude cost estimate of each option along with the Design Engineering Schedule and the Construction Schedule.

TABLE 1: TANK 21, 22 AND 23 TRANSFER LINE LEAK DETECTION STUDY

	ORDER OF MAGNITUDE ESTIMATE	DESIGN ENGINEERING SCHEDULE	CONSTRUCTION SCHEDULE *
Option #1	$650,000	16 Weeks	32 Weeks
Option #2	$570,000	16 Weeks	32 Weeks
Option #3	$910,000	16 Weeks	32 Weeks
Option #4	$1,180,000	16 Weeks	32 Weeks

* BASED ON AVAILABILITY OF MATERIALS

This memo is being issued as a draft for your review and comment and will be considered final upon your approval. If you have any question, please contact me.

Attachments: 5 Sketches
3 Order of Magnitude Estimates

93-016337 3

cc:	K. Aslani, w/o	966-W B10-515
	N.C. Bandyopadhyay, w/a	966-W B20-091
	J.F. Bell, Jr., w/a	MDC-84
	C.M. Clamp, w/o	966-W B20-051
	K. Eck, w/o	966-W B10
	T.J. Horvath, w/o	966-W B20-017
	J.W. Iwert, w/a	966-W B06
	G. Johnson, w/a	MDC-84
	S.H. Khan, w/a	966-W B20-052
	J.E. O'Hair, w/o	966-W B20-019
	S.B. Presgrove, w/o	966-W B20-033
	E.R. Styles, w/a	966-W B20-032
	R.S. Whiteside, w/a	966-W B20-062
	CCC, w/o	966-W B09
	LW Admin. File, w/o	966-W B20

Written Response Required: No

FILE NUMBER 40005/PF107.01

OSR 3-4A-W (Rev 1-89)

WESTINGHOUSE SAVANNAH RIVER COMPANY

INTER-OFFICE MEMORANDUM

WER-HLE-921350

November 20, 1992

To: W. D. Dunaway, 703-18A

From: K. S. Wierzbicki, 742-6G

INCONSISTENCIES IN THE PHASE II TANK ASSESSMENT REPORT FOR THE F AND H-AREA HIGH LEVEL RADIOACTIVE WASTE TANK FARMS

Please find attached a draft copy of the transmittal letter to the South Carolina Department of Health and Environmental Control. This letter is formal notification of an inconsistency between the Phase II Tank Assessment Report and the current existing conditions in the tank farms. This letter has been approved by both Waste Management and the Department of Energy.

Attachment

Westinghouse
Savannah River Company

P.O. Box 616
Aiken, SC 29802

ESH-FSS-92-DRAFT

November 20, 1992

Mr. L. E. Arrington, Engineer
Industrial and Agricultural Wastewater Division
South Carolina Department of Health
and Environmental Control
2600 Bull Street
Columbia, South Carolina 29201

Dear Mr. Arrington:

THE PHASE II TANK ASSESSMENT REPORT FOR THE F AND H- AREA HIGH LEVEL RADIOACTIVE WASTE TANK FARMS (U)

Ref.: Telephone Conversation, C. R. Hayes to L. E. Arrington, 10/13/92

As discussed in the referenced telephone conversation, during research and review for a recent project, an inconsistency between the Phase II Tank Assessment Report and the current existing conditions in the tank farms was identified. Since that time, six transfer lines have been recognized as not possessing adequate leak detection, as required by the standards found in the draft Federal Facility Agreement. Specifically, the lines identified are:

H Diversion Box 5 to Tank 21 (Line 102E)
H Diversion Box 5 to Tank 22 (Line 103E)
H Diversion Box 5 to Tank 23 (Line 101E)
H Diversion Box 5 to Tank 24 (Line 1825)
Tank 14 to Tank 13 (Line 21E)
Tank 16 to Tank 13 (Line 20E)

It is proposed that these lines will be handled in two ways. Since three of these lines (Lines 1825, 21E and 20E) are ancillary equipment for tank systems that will be removed from service in accordance with Section IX.E of the FFA, these lines will be decommissioned with the associated tank systems. An assessment of the remaining transfer lines (Lines 101E, 102E and 103E) is being performed. The assessment will evaluate the need for repairing these lines based on the standards for secondary containment found in the FFA, the cost and the radiation exposure to individuals involved in the upgrading of the lines. These lines will be either 1) repaired per Appendix B.D of the FFA or 2) removed from service with the associated tank system in accordance with Section IX. E. SCDHEC will be informed of the outcome of this assessment.

As discussed at the August 13, 1992 meeting, SRS committed to advise SCDHEC of the revised "need date" for the Wastewater Construction permit. To allow SRS time to adequately address and implement any permit Special Conditions prior to a Department of Energy Operational Readiness Review for the In-Tank Precipitation facility, SRS requests SCDHEC to issue the F/H Tank Farm Wastewater Construction Permit by December 15, 1992.

Yours very truly,

W. D. Dunaway, Manager
Permitting Field Support Group
Environmental Protection Department

Attachment

CC: M. C. Reece, SCDHEC, Lower Savannah District
C. Richardson, SCDHEC, Columbia

BCC:

C. E. Anderson, 703-H
C. Blair-McManus, 703-H
J. E. Bolen, 703-41A
S. S. Cathey, 703-H
M. A. Ceravolo, 703-H
J. W. Cook, 742-A
L. S. Coward, 703-18A
P. D. d'Entremont, 703-H
H. L. Davis, 703-41A
E. Ennis, 241-120H
T. P. Gaughan, 241-152H
A. R. Gough, 922-3W
M. Hawkins, 742-A
C. R. Hayes, 703-18A
M. A. Hunter, 742-6G
B. L. Lewis, 703-H
T. M. Monahon, 703-H
J. V. Odum, 742-A
M. S. Peters, 703-F
R. L. Peterson, 703-41A
J. S. Roberts, 742-A
M. P. Reimnitz, 703-H
R. K. Roosa, 703-H
R. M. Satterfield, 719-4A
G. F. Stejskal, 742-A
C. B. Stevens, 742-6G
W. L. Stubbs, 703-H
W. B. Van Pelt, 241-152H
K. S. Wierzbicki, 742-6G
K. Z. Wolf, 704-15S
G. T. Wright, 703-H
Records Administration, 773-52A
EPD Fileroom, 742-A

Westinghouse
Savannah River Company

P.O. Box 616
Aiken, SC 29802

ESH-FSS-920852

November 20, 1992

Mr. R. L. Peterson, Chief
Environmental Compliance Branch
Field Office, Savannah River
U. S. Department of Energy
P. O. Box A, Building 703-41A
Aiken, SC 29802

Dear Mr. Peterson:

LAND DISPOSAL RESTRICTIONS (LDR) FEDERAL FACILITY COMPLIANCE AGREEMENT - REQUEST FOR TANK USE CONFIRMATION (U)

Attached is a suggested letter containing a request to obtain EPA written confirmation regarding an LDR FFCA issue on tank farm use. Please forward the request to EPA Region IV. This issue has been discussed with P. Prater of your staff.

Sincerely,

J. W. Odum, Manager
Facility Support Section
Environmental Protection Department

BML:vcj
Attachment

CC: EPD File, 742-A

Westinghouse
Savannah River Company

P.O. Box 616
Aiken, SC 29802

ESH-FSS-920851

November 20, 1992

Mr. John C. Lank, Chief
US EPA, Region IV
345 Courtland Street
Atlanta, GA 30365

Dear Mr. Lank:

LAND DISPOSAL RESTRICTIONS (LDR) FEDERAL FACILITY COMPLIANCE AGREEMENT - REQUEST FOR TANK USE CONFIRMATION (U)

SRS and EPA have previously discussed, in various telephone conference calls, the issue of tank usage identified in paragraph 6, page 24 of the LDR FFCA. In summary, SRS must ensure that "... all tanks used for the storage of LDR waste generated after the effective date of [the LDR FFCA] meet the tank standards contained in 40 CFR Part 264..." As we understand the guidance previously verified by EPA Region IV, wastes moved or processed within the High Level Radioactive Waste Tank Farm or the addition of waste to heels of hazardous waste in the Tank Farm would not result in wastes generated after the effective LDR date. However, any new LDR wastes generated as a result of fuel and target fabrication, irradiation, or isotope separation would require storage per provisions of paragraph 6.

SRS is finalizing the tank outage schedule necessary to conduct waste processing at the Defense Waste Processing Facility. At least three return waste streams from various stages of the processing are redirected to or within the tank farm. It is SRS's opinion that these streams are radioactive wastes already present in the tank farm and that such waste movement actions are similar to those already discussed with EPA that would not require storage in tanks subject to paragraph 6 mentioned above.

SRS requests written confirmation from EPA Region IV of the above LDR FFCA interpretation. Please contact P. Prater of my staff if there are any questions.

Sincerely,

A. B. Gould, Director
Environmental Compliance Division

BML:vcj

CC: David Wilson, DHEC
Carl Richardson, DHEC
EPD File, 742-A

W-0517

3

Letter, R. L. Peterson from J. V. Odum
ESH-FSS-920852, November 20, 1992

BCC: J. S. Roberts, 742-A
J. R. McConathy, 742-A
W. D. Dunaway, 703-18A
C. B. Stevens, 703-H
M. A. Hunter, 703-H
C. R. Hayes, 703-18A
M. E. Johnson, 742-A

cc: Joe Odom
Pls. provide
OSR
11-18-92

BC First

INTER-OFFICE MEMORANDUM
Savannah River Site

Chuck Hayes
dl

Date: 18-Nov-1992 06:55am EST
From: W. Brent Boore
BOORE-WB-O6688 AT A1 AT SASRS2
Dept: WM&ER
Tel No: 725-7657

TO: See Below

Subject: Final Comments on the DRAFT HLW Management Plan

The DRAFT HLW Management Plan was issued to DOE-SR for comment and the Plan was reviewed for Sjostrom, Watkins, Terrell and Anderson on 11/12. Charlie Anderson is collecting all DOE-SR comments and will provide feedback to me no later than this Friday, November 20. The agreement with Sjostrom is that if we receive no comments by 11/20 to issue "as is."

In a similar manner, I need any final comments, editions, etc., to the Plan which your program may have also no later than 11/20/92. Please pay particular attention to the milestones, projects, technical issues and funding sections. The milestones desired should be those process and facility related milestones recognized and tracked by DOE whether from the AOP, FYP or Award Fee.

I would also like to have the technical issues listed by projected need date per the tie into the integrated schedule.

Once the final comments are incorporated and Norm Boyter approves the schedule, this becomes the baseline. We shall base future revisions to the baseline using a change control process through the HLW System Program Board chaired by N. C. Boyter.

Distribution:

TO:	Clay B. Jones	(JONES-CB-O4714 AT A1 AT SASRS2)
TO:	Lou Papouchado	(PAPOUCHADO-LM-O4656 @A1@SLSRP1)
TO:	D.B. Amerine	(AMERINE-DB-Y8721 AT A1 AT SASRS2)
TO:	Ginny Ellis	(ELLIS-VE-W0928 AT A1 AT SASRS2)
CC:	Jack S. Roberts [ENV PROT]	(ROBERTS-JS-O5782 @A1@SLSRP1)
CC:	Rod M. Satterfield	(SATTERFIELD-RM-T3212 @A1@SLSRP1)
CC:	Frederick F. Cadek	(CADEK-FF-Y5022 @A1@SLSRP1)
CC:	Sam A. Budenstein	(BUDENSTEIN-SA-O9630 @A1@SLTNOA)
CC:	Rebecca J. Zolin	(ZOLIN-RJ-B7606 AT A1 AT SASRS2)
CC:	PAMELA S. KENNEDY	(KENNEDY-PS-O6182 @A1@SLSRP1)
CC:	Walt Tamosaitis	(TAMOSAITIS-WL-T9848 @A1@SLSRP1)
CC:	E. W. HOLTZSCHEITER	(HOLTZSCHEITER-EW-T4750 @A1@SLSRP1)
CC:	JOSEPH F. ORTALDO	(ORTALDO-JF-O5404 AT A1 AT SASRS2)
CC:	Kyle B. Matthews	(MATTHEWS-KB-B5592 @A1@SRXSS2)
CC:	William H. Pettigrew	(PETTIGREW-WH-B6756 AT A1 AT SASRS2)
CC:	Brenda L. Lewis	(LEWIS-BL-O6503 AT A1 AT SASRS2)
CC:	TOM MONAHON	(MONAHON-TM-O4411 @A1@SRXSS2)
CC:	Mark J. Mahoney	(MAHONEY-MJ-O5457 AT A1 AT SASRS2)
CC:	Joseph J. Scherpenberg	(SCHERPENBERG-JJ-Y4460 AT A1 AT SASRS2)
CC:	P.H. Stevens	(STEVENS-PH-T4978 AT A1 AT SASRS2)

Westinghouse
Savannah River Company

Norman C. Boyter
Vice President & General Manager
Waste Management & Environmental Restoration Division

P.O. Box 616
Aiken, SC 29802

Punchlist
11/20

WER-VP-92-0155

November 5, 1992

Mr. L. C. Sjostrom, Assistant Manager
Environmental Restoration & Waste Management
Savannah River Field Office
U. S. Department of Energy
Aiken SC 29802

Dear Mr. Sjostrom:

HIGH LEVEL WASTE SYSTEM MANAGEMENT PLAN - Rev(0) (U)

Ref: Letter, Sjostrom to Boyter, "WASTE REMOVAL MANAGEMENT PLAN", 9/8/92
Letter, Boyter to Sjostrom, "WASTE REMOVAL MANAGEMENT PLAN (U)", 9/21/92
Letter, Boyter to Sjostrom, "HIGH LEVEL WASTE SYSTEM MANAGEMENT (U), 10/22/92

Attached is a DRAFT of the initial High Level Waste (HLW) Management Plan for your review and comments. Your letter of September 8, 1992 requested that WSRC develop and implement a formal Waste Removal management program and provide a schedule to produce a Management Plan. In my letter of October 22, 1992, I explained the High Level Waste System Management approach that will utilize a senior level HLW System Program Board which includes responsibility for oversight and approval of the HLW System management Plan.

The HLW System Program Board met on November 4, 1992 and approved the DRAFT "HLW System Management Plan - Rev (0)." The plan is still in draft form as it is undergoing review by the WSRC environmental and legal groups. This initial "Plan" represents the current integrated HLW/DWPF System schedule with related baseline assumptions. The HLW Management Plan - Rev (0) serves to define the baseline from which improvement must be made. It is the intent to issue a Rev (1) to this Plan coincidental with the FY95 Five Year Plan update that will include as many improvements as practical in the time frame.

We welcome your comments on the DRAFT prior to the formal issue of the document and propose that we meet to discuss your concerns and comments to enhance the review process.

Yours very truly,

C. L. Piechnanger for

N. C. Boyter, Vice President and General Manager
Waste Management and Environmental Restoration Division

WBB:mhl
Att:

HLW System Management Plan (U) - Revision 0

Table of Contents

		Page
Executive Summary		4
HLW/DWPF System Description		
1.0	Principles/Guidelines	4
1.1	Regulatory Guidelines	4
1.2	DOE Guidance/AOP/FYP	5
1.3	Process Considerations	6
1.4	Waste Removal Sequence	6
2.0	Assumptions	
2.1	Facility Startup and Operation	7
2.1.1	DWPF	7
2.1.2	HLW Processing Facilities	8
2.1.3	HLW Tank Structure	8
2.1.4	Waste Removal General	9
2.2	Resources	9
2.3	Support Services	9
2.4	Regulatory	10
3.0	Limitations/Constraints of the Plan	
3.1	Process Knowledge or Constraint	10
3.2	Schedule Mechanics and Site Integration	11
3.3	External Influence Limitations	11
3.4	Funding	11
3.5	Process Interdependence Limitations	11
3.6	Personnel and Infrastructure	12
4.0	Integrated Schedule	
4.1	General	
4.2	Regulatory Based	12
4.3	Integrated Operations	13
4.4	Overall Waste Removal	13
4.5	DOE Based Milestones	13

DRAFT

5.0 Technical Issues 14

6.0 SRTC Related Programs 14

6.1 DWPF 14

6.2 HLW 15

7.0 Projects 16

8.0 Budgetary Support 17

9.0 Resources 18

9.1 HLW 18

9.2 DWPF 18

10.0 Site Long Range Planning Interaction 18

11.0 HLW Plan Management 19

DRAFT

Table of Appendixes

A. System Description

B. HLW/DWPF Interactive Logic

C. Regulatory Schedule

D. Integrated Schedule

E. Waste Removal Schedule

F. Milestones

F.1 HLW

F.2 DWPF

F.3 SRTC

G. Technical Issues

H. Projects

I. Budget

DRAFT

HLW Management Plan Rev (0.0)

Executive Summary

The purpose of this High Level Waste (HLW) Management Plan is to document the baseline for the current HLW operations from the receipt of fresh wastes through the operation of the DWPF. It is a summary of the main assumptions and strategy for operation supported by the FY93 Annual Operating Plan (AOP) to meet regulatory and DOE milestones.

The key milestones relate to the processes required to safely remove radioactive waste from storage and process it into canisters of glass or into Saltstone. For the HLW operations, these milestones relate to the operation of the In-Tank Precipitation (ITP), Extended Sludge Processing (ESP) and Evaporation processes along with associated transfer operations. For the DWPF operations, the key milestones relate to successful cold chemical operation, initiation of radioactive feed and successful operation of the Late Wash (LW) process.

The Plan assumes success in planned funding activities including reprogramming efforts. It also assumes adequate manpower and infrastructure needs will be met including an adequate level of support services (e.g., laboratory analyses including necessary new facilities, steam, electrical, water, etc.).

DRAFT

HLW/DWPF System

This Plan refers to the HLW/DWPF System as described in Appendix A. This includes all of the HLW Tank Farm Operations from receipt of fresh wastes to the process and transfer facilities to deliver feed to, and receive recycle from, the DWPF, the DWPF operation, and the key supporting operations such as the Effluent Treatment Facility (ETF) and Saltstone.

1.0 Principles / Guidelines

The principal driver for the HLW Plan is to facilitate the removal of high level waste from the older style Type I, II and IV Tanks while maintaining adequate and safe storage of the remaining HLW. The secondary drivers are addressed by the following guidelines:

1.1 Regulatory Guidelines

- RCRA: The Resource Conservation and Recovery Act (RCRA) regulation currently applies to the operation and maintenance of the tank farms. Due to inadequacies in secondary containment, the tank farms are not in compliance with the regulation. Once a Waste Water Operating Permit is received (see below), the operation of the Tank Farms will no longer be regulated under RCRA. Secondary containment standards will then be governed per requirements in the Federal Facility Agreement (FFA). However, the generation of hazardous waste from the Tank Farm will still be regulated as RCRA waste.

- FFCA: The Federal Facility Compliance Agreement (FFCA) provides commitments relative to the operation of the DWPF, the use of Type I, II and IV tanks and the operation of the Consolidated Incineration Facility (CIF). The FFCA stipulates that no newly generated Land Disposal Restriction (LDR) waste can be placed in Tanks 13, 21, 22, or 23. Newly generated LDR waste is defined as waste generated after March 13, 1991. WSRC's position is that recycle streams associated with the processing of tank farm high level waste are not considered new LDR waste. Therefore, wastes from ITP, ESP, Late Wash, DWPF or any stream management step associated with tank farm operation (i.e., evaporation) does not constitute newly generated waste. The FFA (see below) will supersede this provision upon its effective date.

- FFA: The Federal Facility Agreement (FFA) provides standards for secondary containment, as well as provisions for the removal of leaking or unsuitable tanks from service. The FFA allows for the continued use of unfit tanks as long as they are included on a schedule for the removal of such tanks from service. This schedule is required to be submitted to SCDHEC ninety days after the effective date of the agreement.

- Waste Water Operating Permit: A Waste Water Operating Permit for the High Level Waste Tank Farms is currently under negotiation with SCDHEC. Operation of the tank farms must be in compliance with the permit including any special conditions and significant changes to the tank farms may require a permit modification.

DRAFT

1.2 DOE Orders/Guidance/AOP/FYP

All facilities and operations required for removal, preparation, processing, and final disposal of high level liquid waste are done in accordance with all applicable DOE Orders. Where DOE Orders do not exist to provide requirements and guidance, generally accepted industry standards, such as, INPO guidelines, ANSI/ANS standards, Code of Federal Register (CFR), National Fire Protection Association (NFPA), and South Carolina regulations are utilized.

Specific guidance from DOE relative to this Plan is provided by a number of documents such as the Program Execution Guidance (PEG), the Annual Operating Plan (AOP), the Five Year Plan (FYP), applicable Award Fee Items, and specific individual guidance letters as deemed necessary by DOE-SR. The specific funding guidelines and planning baselines for the HLW Plan Rev (0) can be found in the FY93 Annual Operating Plan and the FY94 Five Year Plan. Changes to the baseline are controlled by a formal Change Control process.

1.3 Process Considerations

- Safety Analysis: Operations will be maintained within the defined boundaries of the appropriate Safety Analysis Report (SAR) and applicable addenda.
- Environmental: Releases from operations' areas will meet all conditions of the applicable permits
- Waste Removal from HLW Tanks: HLW at SRS is stored in carbon steel tanks. Some of these tanks do not provide full secondary containment and, in some cases, no secondary containment is provided. Several of the HLW tanks have leaked in the past. While no tanks have active leak sites, the risk to the environment that could result from a leak outside of containment will be reduced by removing the HLW from the current storage tanks. The waste will be processed through the DWPF into a stable borosilicate glass waste form contained in stainless steel canisters. The ITP, ESP, LW and DWPF are all new operations necessary to accomplish the mission of processing the waste into the glass form. The start up of these facilities are being expedited to ensure successful operability to support the waste removal mission.
- DWPF: The DWPF operation, being the cornerstone of the waste removal program and a one of a kind operation, is currently expediting startup operations to support radioactive operation beginning in 6/94. Subsequently, this drives the HLW operations as necessary to supply both the initial and continuous feed to the DWPF per the 6/94 startup schedule.
- Tank Space Availability: Ensuring the availability of sufficient operating space in specific tanks at specific need dates is a key consideration for operating strategy. Due to a number of factors, the most important of which has been the extended outage of the 1H Evaporator, the inventory of waste in the HLW tanks is very high (~90 % of available capacity utilized). Process strategy, in addition to providing safe storage of waste and a feed stream to DWPF, must also generate additional space gain (surge capacity) in the form of available tank space. This recovered tank space results from waste removal through ITP or by processing of existing dilute HLW supernate through the evaporator systems. This space gain is extremely important for three reasons: 1) to maintain the evaporator systems on-line, 2) to provide space to receive the very large volume liquid transfers which are a part of the waste removal process as well as the large waste water recycle from DWPF, and 3) to ensure flexibility to handle unanticipated problems that could require additional tank space.

DRAFT

1.4 Waste Removal Sequencing Considerations

The current sequencing of waste removal from the HLW tanks is per the following generalized priority:

1) Control tank chemistry including radionuclide and fissile material inventory
2) Maintain adequate emergency space per the Tank Farm SAR
3) Remove waste from the tanks with a history of leakage
4) Remove waste from tanks which do not meet secondary containment requirements
5) Provide adequate salt receipt space to maintain the evaporator systems on line

6) Generate adequate available tank space (surge capacity) to handle the large volume waste transfers and waste removal processing recycle streams including DWPF recycle
7) Ensure blending of processed wastes meets the Saltstone and DWPF feed criteria
8) Maintain continuity of radioactive waste feed to the DWPF
9) Provide adequate receipt space for fresh wastes
10) Remove waste from the remaining tanks

While the principal driver for the HLW Plan is the removal of waste from the older style tanks, it is necessary to remove waste from some of the Type III tanks to support the cleanup of the older tanks. Removal of wastes from new tanks is required to maintain the evaporator systems on-line and to provide space as required to receive the large transfers involved with the waste removal processes and DWPF recycle. For the current period, removal of salt from Type III Tanks 41, 25 and 29 must receive priority to support the key waste removal mission of the 2H, 2F and 1H Evaporator systems. Relative to planning, it is the complex interdependency of the HLW and DWPF safety and process requirements that drives the actual sequencing of waste removal from tanks.

DRAFT

2.0 Assumptions

2.1 Facility Startup and Operation:

2.1.1 DWPF

- Timely authorization of the DWPF Startup Operational Readiness Reviews
- DWPF conducts successful Cold Chemical, Waste Qualification Runs and Hg Runs in a manner to support Radioactive Operation in 6/94
- DWPF Recycle waste water during cold chemical runs can be adequately processed by an off-site vendor or by processing on-site at the Effluent Treatment Facility or at TNX.
- Late Wash Interarea Line modifications funded and completed to support DWPF start up on sludge only feed and recycle of waste water to HLW by 6/94.
- Scheduled DWPF outage 6/95 - 10/95 to tie in late wash
- Resume operation on sludge and precipitate feed 10/95.
- Saltstone operation capable of supporting ITP operation beginning in 4/93
- The DWPF startup and operation is as follows:
  - Begin Radioactive Spike Test on 6/94
  - Transition into a radioactive sludge only feed in a staged manner to reach an initial equivalent rate of 70 KGals of sludge per year (~ 100 canisters per year)
  - DWPF outage 6/95-10/95 for LW tie-in
  - DWPF resumes feed with both sludge and precipitate 10/95 with continued process rate of ~100 cylinders per year until funding and HLW waste removal operations can support increased rate (~FY 98)

2.1.2 HLW Processing Facilities

- Resume Extended Sludge Processing (ESP) Startup 4/93 and operate Batch 1 at 200,000 gal/wash with the following number of washes required:
  Tank 42 - 3 washes
  Tank 51 - 6 washes.
  Future batches defined per the 1992 SRS Radioactive Liquid Waste Forecast issued on June 18,1992 (WER-CMD-92-0022) with minor changes to reflect current process knowledge
- In-Tank Precipitation (ITP) Startup 4/93 and operate per current processing baseline (Ref.: Inter-Office Memo, D. A. Pervis to M. J. Mahoney, "In-Tank Precipitation Operating Schedule", WER-ITP-920065).
- Current blending and process strategy will produce a sludge only feed meeting the DWPF feed acceptance criteria.
- No impact from technical resolution of ITP/ESP criticality, tank integrity or seismic evaluations
- New Waste Transfer Facility (NWTF) is operational 11/93.

2.1.3 HLW Space Gain

- The schedule is based upon the following evaporator operational utilities when appropriate feed is available:

	Utility	Approx. Space Gain Gals Per Month
1H Evaporator	40%	84,000
2H Evaporator	60%	126,000
2F Evaporator	60%	126,000
Replacement High Level Waste Evaporator	80%	360,000

  (Note: Utility is defined as the % of time the facilities are in operation. The values shown are based upon the availability of dilute feed, historical data and engineering judgment.

DRAFT

- 1H Evaporator on-line 2/93 based upon receipt of a Waste Water Operating Permit and DOE startup approval by 2/93.
- 1H will continue to operate until shutdown is taken to tie in the Replacement High Level Waste Evapaorator
- Replacement High Level Waste Evaporator (RHLWE) on-line 8/96.
- 2F Evaporator conversion to High Heat Waste (HHW) service by 6/93 utilizing Tank 46F as a concentrate receipt tank.
- Continued use of Type IV single walled tanks for RBOF receipt, ITP/ESP wash water storage, and LW recycle, as required, until adequate space can be provided in Type III tanks to remove Type IV tanks from service.
- Continued use of Tank 13H as the 1H Evaporator Feed Tank until replaced by the RHLWE system.
- Canyon waste volumes will be per the current forecast (P&PD, 91-5, Rev. 1, June 26, 1992). This assumes reprocessing fuel through reactor charge K-14 and there are no new missions which will bring new waste streams into the system. (Note: A K-15 reactor charge, if processed, would have only a minor impact on the forecast)

Maybe need to break out separately

2.1.4 Waste Removal General

- Schedule is based on a generic construction through startup authorization duration of 22 - 30 months with a judgment factor applied for a given system.
- Waste Removal completion for Type I, II, and IV tanks is defined as the removal of as much waste as is practical from the tank primary and annulus (if applicable) through the use of currently designed waste removal facilities including agitation and transfer pumps, steam eductor jets, and tank interior spray washing equipment.
- When waste removal is complete, as defined above, the tank will be available for decommissioning by the Environmental Restoration (ER) Department under applicable permit or regulatory requirements. However, the current schedule does not address this type of closure action by ER.

2.2 Resources

- Assumes authorization of FY92 Reprogramming Proposal, FY93 Budget Amendment, FY93 Reprogramming Proposal
- Funding for Waste Removal activities is provided as follows:
  - FY93 at approved Annual Operating Plan (AOP) and assuming successful change control ($27,043K) action currently in progress.
  - FY94 at FY94 Five Year Plan (FYP) Planning Case levels (~$54,000K).
  - FY95 and outyears at 10% growth above FY94 levels.

  (Note: The Waste Removal and Replacement High Level Waste Evaporator projects have been rebaselined and presented for validation. The rebaselined cost, schedule and scope are not in alignment with the FY94 FYP. Revised yearly funding requirements and scheduled activities will be incorporated into future revisions to the Plan when approved through the DOE change control process.)
- Project schedules for installation of Waste Removal facilities can be met. Typical project duration is approximately 30 - 36 months per tank. (See note above on project rebaselining activities.)
- Timely funding for Late Wash Facilities is provided to support project implementation
- Timely funding for the RHLWE is provided to support project implementation
- Manpower and Infrastructure (analytical laboratories, maintenance shops, training facilities, office buildings, etc.) requirements for Waste Removal, DWPF and HLW Operation can be made available.

2.3 Support Services

- An adequate level of services (e.g., laboratory analyses including necessary facilities, steam, electrical, water, etc.) will be available to support the High Level Waste and DWPF operations. These absolute values will be further defined as the HLW Plan is revised to support the update of the FYP.

DRAFT

2.4 Regulatory

- Commitments in the FFCA and FFA will be fulfilled by WSRC.
- ITP Filter Treatability Variance will be approved by EPA prior to startup.
- Waste Water Operating Permit will be received to support ITP startup.
- Benzene Abatement will not be required for startup of ITP.
- Exemption will be received for mercury emissions from ESP prior to restart.
- SCDHEC allows the continued use of Type IV tanks and does not require the Hazardous Low Level Waste Processing Tanks to be built.
- It is assumed that the DWPF receives timely approval of the SCDHEC Air Operating permit.

3.0 Limitations / Constraints of the Plan

The key limitation to providing a schedule with a high confidence factor is our lack of operating experience with the new processes in the ITP, ESP, LW and DWPF facilities. There are both technical concerns and process knowledge that can be addressed only after experiencing actual radioactive operation. The limitations/constraints listed below provide the drivers for most of our research and technical improvement programs.

3.1 Process Knowledge or Constraint

- Current process schedule is to provide an "effectively aged" 5 yr. old sludge and 15 yr. old precipitate feed to DWPF to minimize exposure to DWPF and Saltstone personnel as well as meet DWPF feed acceptance criteria.
- Success is based upon unproven attainment and capacity for the "new technology" operations (ITP, ESP, LW and DWPF).
- The baseline operating cycles for the ITP/ESP processes are being evaluated vs. current plant operating cycles. Changes to the cycle times or number of washes, etc., must be integrated into the schedule and depend upon specific tank conditions such as composition and temperature considerations.
- Current situation (with limited reactor operation) has not been rigorously reviewed for an optimum blending strategy to support earlier waste removal from older style tanks.
- Current strategy does not optimize Type III tank space recovery for blending of current supernates with older materials to avoid future salt cycle. (Supernate> Evaporator> Salt Storage> Waste Removal> ITP> DWPF> Recycle>Evaporator>etc. vs. Supernate> ITP> DWPF, etc.)
- Current schedule provides little to no contingency space for unanticipated Tank Farm problems. (e.g., unanticipated process problems or mechanical failures, limited use of older style tanks, transfer system problems, extended outages of particular system components)
- There has been little optimization work for the basic processes. (To date, the effort has been to demonstrate and prove that the new processes will work.)
- Current schedule does not attempt to minimize total canister production vs. long term storage requirements.

DRAFT

3.2 Schedule Mechanics and Site Integration

- Current schedule has not been fully manpower loaded nor leveled. The Plan requires significant manpower growth and assumes that manpower is available and that the associated infrastructure needs can be supported.
- Current schedule does not reflect change in site mission or future mission.
- Secondary interaction with other divisions such as Solid Waste Management, Environmental Restoration,and Site Services have not been fully integrated into the schedule.

3.3 External Influence Limitations

External factors, for which the operating group has no control, can have significant impact to the schedule.

- The current schedule is based from best understanding of administrative criteria from which the plant is to be operated. However, at least one evaporator system has experienced an unanticipated outage of over a year due to the time to resolve a regulatory permit issue. External intervention or application of new criteria which result in deviation from the planned operation, can preclude removal of waste from the HLW tanks per the planning schedule . Timely resolution of concerns will of course depend on the nature of the specific issue.
- Current schedule has no contingency for unanticipated program changes resulting from interaction with oversight groups, changing regulatory requirements, or administrative delays.

DRAFT

3.4 Funding

- The current schedule reflects only use of funds authorized through the AOP and ongoing reprogramming efforts to support startup of the key facilities.
- This level of funding should support continuous feed to the DWPF at an attainment rate of at least 25%.
- Current schedule does not reflect pursuit of additional funding to support full attainment at DWPF at the earliest possible date, or the earliest possible retirement of the older style tanks.

3.5 Process Interdependence Limitations

The schedule for the removal of waste from the SRS HLW Tank Farms is contingent upon a number of interrelated variables. As such, a change in any one of these variables can initiate a "domino" effect on the schedule itself. For example, the waste removal schedule assumes successful operation, up to design rates, of new technology operations such as ITP, ESP, LW and the DWPF. These new technology processes must operate to demonstrate success in actual radioactive HLW service. Moreover, the ability of the facilities to meet design throughput and performance will be established only after the facilities have experienced significant run times of one to two years. These four new

operations are critically dependent on one another as well. A significant problem in any one of the facilities could have a major impact on the other three.

In addition to the uncertainty involved with the startup and operation of these new processes, there are other operations and actions with potential to significantly affect the schedule for removal of waste. The process of removing waste from the tanks, preparing feed for DWPF and the actual operation of the DWPF involves large quantities of process water and transfers of large quantities (100+ K gallons at a time) of the various process streams. The ability to handle the water balance throughout the system depends upon successful operation of the HLW Tank Farm evaporator and transfer systems. The current schedule assumes continuity of historical operation of these systems under current criteria. Without successful evaporator operation there is insufficient room to handle the fresh wastes, ESP sludge decant and wash water, and various recycle streams. The ability of the evaporator systems to remain on-line is dependent upon a successful ITP operation to remove the salt from the evaporator concentrate receipt (salt) tanks. The on-going ITP operation is in turn dependent upon a successful LW operation and DWPF operations including the ability of the HLW area to handle the large recycle streams from these operations. This interdependence of process operations is depicted in Appendix B.

DRAFT

3.6 Personnel and Infrastructure

The scheduled waste removal activity requires a significant growth in personnel to support the many new operations. This growth, however, will be controlled, as practical, to utilize personnel as they become available from other site operations which are reducing personnel levels. Availability of personnel, therefore, has the potential to limit the rate of change to the process operations. It is equally important to provide the infrastructure support to house and equip these personnel.

4.0 Integrated HLW/DWPF System Schedule

4.1 General

The Integrated Waste Management Schedule was initially developed from individual project schedules for the In-Tank Precipitation (ITP), Extended Sludge Processing (ESP), and New Waste Transfer Facility (NWTF). That information was summarized, interface points defined, and further expanded to include operational schedules for ITP, ESP, and waste removal to support the Defense Waste Processing Facility (DWPF) startup.

The input and impacts on Tank Farm available space from DWPF feed preparation, canyon waste generation, and DWPF recycle have been determined and documented annually in the SRS Radioactive Liquid Waste Forecast. These processing requirements have driven the need for additional waste storage capacity achieved by evaporation, and salt removal in order to sustain sludge removal and DWPF processing. These operational need dates have been balanced against the funding necessary to achieve them. The funding priority

has been established to maintaining available waste receipt space in the Tank Farms and supporting continuous DWPF feed by 6/1/94. This strategy also supports waste removal from the old style tanks as soon as practical.

The schedule for HLW and DWPF Operations is contained in Appendices C, D, and E which highlight the HLW plan relative to appropriate drivers listed below. The sequencing of tanks is anticipated to be revised as improvements and optimization of processes are achieved.

4.2 Regulatory Based

Appendix C contains the waste removal schedule for which regulatory drivers exist. Those drivers are as follows:

- FFCA: 12/30/93 startup date for DWPF production runs (to be re-negotiated). Ninety (90) days following commencement of DWPF production runs, annual waste processing milestone schedule must be proposed to EPA along with a date for completion of waste processing.

- FFA: Provide removal schedule to SCDHEC 90 days after effective date of Agreement

- Waste Water Operating Permit: Pending application submitted to SCDHEC. Conditions of the permit yet to be resolved.

DRAFT

4.3 Integrated Operations

Appendix D contains the current summary level planning schedule with emphasis on the interdependence of the DWPF and HLW process operations. The sequencing of these key events are logically tied to a need to meet the overall waste removal schedule and handle all byproducts and recycle streams from the processes. This schedule also includes the plan for the Consolidated Incinerator Facility (CIF) which is required to process the byproduct benzene from the DWPF operation. The CIF also has a logic tie based upon regulatory commitment in the FFCA.

4.4 Overall Waste Removal

Appendix E depicts the overall sequencing of waste removal from all of the Type III tanks per the principles listed in Section 1.5. This contains all of the HLW tanks not listed in Appendix C.

4.5 DOE Based Milestones

The DOE based milestones relative to execution of this schedule are listed in Appendix F.

5.0 Technical Issues

There are several technical issues and uncertainties that must be addressed to ensure success of the HLW Plan. A description of these issues, the required date of resolution and the logic tie to the schedule are listed in Appendix G.

6.0 SRTC Support Required

Savannah River Technology Center (SRTC) is performing the technology programs described below to support of the DWPF and HLW programs. These programs are funded per the FY93 AOP and the FY93 Reprogramming action. They have been generated per agreement of SRTC and the applicable WMER program line management. Milestones for these programs are listed in Appendix F.

6.1 DWPF Programs

6.1.1 Technology Assurance and Development

Support DWPF technology by identifying operational problems and resolving technology issues. Also, support DWPF startup requirements, develop process modifications to optimize processing, improve product quality and enhance operational safety.

DRAFT

6.1.2 Waste Acceptance

Provide waste form product acceptance technology and demonstrate compliance with repository requirements. The preparation (and revisions) of the Waste Form Qualification Report (WQR) will include the following: providing the technical basis for the Glass Product Control Program, chemical compatibility, glass thermal stability, radionuclide inventory projections, and foreign materials in the DWPF product. The canister integrity and technical liaison work will continue. Develop and demonstrate the Product Composition Control System (PCCS) for DWPF.

6.1.3 Analytical methods Development and Analytical Support

Analytical methods development and techniques are developed for use at DWPF, and analysis of IDMS and PHEF samples are performed at facilities at TNX. Additional lab facilities will be required to support DWPF and are funded under capital funding, but delays in project approval will impact when lab will be functioning.

6.1.4 DWPF Startup Support.

DWPF plant support during test planning and actual chemical runs. Activities include development of Process Requirements, specification of DWPF feed for Cold Chemical Runs(CCR) and Radioactive operation, technical support including Engineering, material Engineering, statistical and analytical support for

the DWPF process and equipment. Assistance is provided to DWPF personnel in preparation and execution of presentations to oversight groups. Personnel for in-resident support are provided during key tests.

6.2 HLW Programs

6.2.1 HLW Storage/Tank Farm Support

The HLW chemistry is studied to ensure continued safe storage. Corrosion data, corrosion mechanisms and waste chemistry data bases are maintained. Assistance is also provided for operation of the HLW evaporators, pumps and pumping problems, dispersion of inhibitors into the tanks, stress analysis on equipment due to operations/events, impacts of new streams on operations, determination of the ultimate fate of species introduced into the tanks and evaluation of on-going or new operations involving HLW.

6.2.2 Safety Analysis

Safety analyses and documentation is provided for all HLW facilities. Justifications for Continued Operation will be provided until Safety Analysis Reports can be upgraded to current standards. Support of Unreviewed Safety Question Determinations and interfaces with various outside oversight organizations will be provided. A complete Safety Analysis Report Reference Document will be provided. Preparation and update of safety documentation will be done in accordance with DOE Order 5481.1B, 5480.5, and SROM 5480.1-1. Compliance with new DOE Orders 5480.23 and 5480.22 is unfunded.

DRAFT

6.2.3 Tank Farm Remote Equipment

Remote equipment is developed to improve HLW Tank Farm operation and reduce personnel radiation exposure. Development of remote equipment to disassemble components and reduce waste volume is included. Current tasks include improvement of pumps to reduce maintenance requirements, improvement of HLW samplers, evaluation of requirements for salt mining equipment, and modification of the soil disposal box to improve handling.

6.2.4 ITP/ESP

Technology support is provided for start-up of ITP and ESP. This includes technical documentation, chemistry studies of the process, testing to provide cold feeds reliability, determining cleaning requirements for equipment, addressing of problems of benzene generation and reduction of emissions to the environment and testing of pumps for use in these processes. Support for associated SRTC facilities at TNX is also included.

6.2.5 Performance Improvements in HLW Processing and Waste Handling

Operations of the HLW Tank Farm are improved by providing technology to enhance current operations. This activity supports initial development support for experimentation and testing of potential improvements and process operations. However this activity is unfunded.

6.2.6 F/H Effluent Treatment Facility

Support is provided for treatment of low level radioactive effluents from the F and H Area generators. Studies and testing will be performed in support of filter fouling problems, ion exchange columns and reverse osmosis, control of biological growth in operations and influent streams; associated sampling programs are included.

6.2.7 Process Development Analytical Support

Analytical support for HLW activities is provided. This will include support for tank chemistry studies and operation of the High Level Caves for small-scale testing. This support includes methods development as well as actual analyses. This activity includes several years of process support for the ITP process until the plant is able to take over this function. Analyses will also be provided to support Tank Farm operation as well as related development work at SRTC.

DRAFT

6.2.8 Other Technical Support

Technical (engineering) support is provided in the areas of materials consultation, system remote inspection, special sensing instrumentation, and robotic equipment development.

7.0 Projects

The project work required to support the DWPF operation and the waste removal operations in the HLW Plan are listed in Appendix H. This includes a brief description of the scope as well as the driver and TEC for the project.

Due to the interdependency of the many processes involved with waste removal through glass production, the timing and sequencing of project completion is crucial . For instance, the feed to the DWPF is dependent upon the ITP and ESP operations. The ITP is further dependent upon the timely implementation of the new Late Wash project to produce acceptable feed for the DWPF. Simultaneous implementation of multiple waste removal projects is necessary to provide feed to ITP and ESP, and these projects both support and require associated evaporator system performance. The successful operation of the DWPF depends upon the evaporator systems (the RHLWE system in particular) being capable of supporting the large recycle waste water stream. Regulatory drivers also exist such as the CIF to handle the benzene from the DWPF operation and the waste removal schedule itself. It is therefore critical that adequate funding and manpower be maintained to keep the projects on schedule

8.0 Budgetary Support

The budget plan to support the HLW Plan through FY98 is shown in Appendix I. The basis for these dollars is the FY93 AOP and the planning values from the FY94 FYP. The key assumption for the FY93 AOP Budget is the startup of DWPF on a radioactive sludge only feed beginning 6/94 with HLW actions to support delivery of feed on a continuous basis thereafter. The budget required for the outyears will be dependent upon the planned attainment for DWPF. As attainment is increased, waste removal projects must be expedited to support the feed requirements. Such an increase in attainment will impact the need for both Saltstone vaults as well as the authorization and construction of the Glass Waste Storage Building (GWSB)#2.

There are known issues and disconnects with the FY93 AOP with respect to the FY94 FYP. They have been summarized as follows:

- The current budget as shown on Appendix I does not contain any funding provision to support the Late Wash Facility project. The portion of this project to bypass the Auxiliary Pump Pit is needed to provide the initial radioactive sludge feed to DWPF.
- Currently projected needs of SRTC to support the HLW Plan including Late Wash development exceed the funding projection in the FYP
- Funding for Saltstone vault capping is needed in FY93
- Implementation of DNFSB Recommendation 90-2 is funded at $400K. The actual need could be up to $[illegible]K to fund the WMER pilot program at DWPF.
- Configuration Management is not fully funded in FY94 (given the reduction approved in the FY93 AOP).
- A $6M WMER credit for Site overhead adjustment has been placed in DWPF Program Support pending further resolution.
- Funding for oversight programs (primarily ESH&QA and E&PD) is significantly higher in the FY93 AOP than in the FY94 FYP. The FY93 AOP is believed to be the more realistic base for future costs. This trend is expected to continue.
- Assumptions for Saltstone vault construction differ between the FYP and the AOP. The AOP assumes a need for vault #2 in 10/94 and vault #3 in FY95.
- The GWSB #2 will be required as a FY95 Line Item (8/95 authorization) for a 50% attainment rate, a FY96 Line Item (4/96 authorization) for a 35% attainment rate or as late as a FY97 Line Item (10/96 Authorization) if attainment is maintained at a 25% rate.
- Other Project Costs (OPC) funding requirements, as currently estimated by intitial evaluation, are not fully funded in the FY94 FYP. The related OPC resources, in general, have not been included in the schedule.

As a result of knowledge gained in producing this HLW Management Plan along with funding requirements previously identified, a change in funding strategy is needed. WMER is in the process of developing a recommendation to DOE-SR for a combination of requests for additional funding as well as reprogramming of current funds.

DRAFT

9.0 Resources

This HLW Plan requires a significant operations manpower increase of 228 personnel for FY93. Success of the HLW plan depends upon obtaining manpower (including additional E&PD personnel as required) in a timely manner. However, this growth will be controlled, as practical, to utilize personnel as they become available from other site operations which are reducing personnel levels to minimize the potential for future personnel reductions. Availability of personnel, therefore, has the potential to limit the rate of change to the process operations and thus impact the ability to meet the schedule.

9.1 HLW

The AOP for HLW shows a planned growth of ~170 personnel in FY93. This growth is required to support the major administrative program improvements such as work control practices, training, etc., an increase in operating staff for ITP/ESP operations, and an increase in support for waste removal from Tank 25, the second feed tank for ITP. This growth includes a credit for reduction in ITP startup support personnel. Additional growth will be required in the outyears to support the ever increasing waste removal operations.

DRAFT

9.2 DWPF

The startup plan for DWPF is based upon the adequacy of the current work force.

10.0 Site Long Range Planning Interaction

Appropriate references have been made to the FY93 AOP and the FY94 FYP. Future updates of the plan will ensure continued interaction with Long Range Plans for the Site. The HLW Plan is compatible with the existing plans to deinventory the canyons. For the purpose of this plan, fresh wastes receipts from the canyons include processing of driver fuel through K-14 along with the missions of the canyons to deinventory the canyon facilities. The Plan contains no provisions for generation of fresh waste from additional processing although the processing of a K-15 charge would have an insignificant impact to the waste removal program.

11.0 HLW Plan Management

Due mainly to the lack of actual operating experience in the new processes and to the combination of interacting factors previously discussed , there is a significant degree of uncertainty and improvement that can be made in the schedule.

SRS plans to refine and update the current schedule consistent with the next update of the FYP to be submitted in the 3QFY93. This update will include improved process experience, strategy as possible to increase the overall waste removal rate, appropriate revision to the sequence of waste removal from specific tanks, and a leveling of personnel as practical. This update will also evaluate the change in the overall site mission versus potential impacts to the waste removal operations and resolution of funding issues.

The HLW Plan is approved by the senior level HLW System Program Board, chaired by the VP&GM of the WMER Division. The board is comprised of the level two managers of the key line programs and support divisions. A primary responsibility of this board is the oversight and approval of the HLW System Management Plan and the integrated schedule which form the technical schedule and cost "baseline" for the overall program. Maintenance of this "baseline", especially with regard to technology developments, and alignment with the AOP and FYP is controlled through formal change control process. Board approval is required before line programs take action which could have significant impact on the integrated schedule. This board is also responsible for ensuring corrective actions to meet program objectives are being accomplished through the responsible line management.

The HLW System Management Plan will be updated annually to coincide with the update of the FYP. Any revisions during the year will be per a formal change control process and should also reflect any significant formalized change in the AOP.

DRAFT

Appendix A

HLW/DWPF System Description

This appendix provides an overview of the processes and facilities included in the HLW/DWPF System. A figure of the system is included at the end of this appendix.

High Level Waste

High-Level Waste (HLW) is defined as the highly radioactive waste material that results from the reprocessing of spent nuclear fuel. This includes liquid waste produced directly in reprocessing and any solid waste derived from the liquid. The HLW contains a combination of transuranic waste and fission products in concentrations requiring permanent isolation.

SRS liquid waste, as received in the waste tanks, is made up of many waste streams generated during the recovery and purification of transuranic products and unburned fissile material from spent reactor fuel elements. These wastes are neutralized to excess alkalinity (pH up to 13) before transfer to the million-gallon underground storage tanks.

DRAFT

HLW is separated into the F- and H-Area Canyons according to radionuclide and heat content. High-heat waste (HHW) is primarily generated during the first extraction cycle in the separations canyon and contains a major portion of the radioactivity. Low-heat waste (LHW) is primarily generated from the second and subsequent extraction cycles in the canyons. HHW is aged at least a year in receipt tanks to reduce the concentration of short-lived radionuclides before evaporation.

Waste Tanks

Waste Management operates 51 waste tanks and 4 evaporators for the purpose of safely storing and processing liquid radioactive waste. The major waste streams into the F- and H-Area tank farms include HHW, LHW, and DWPF recycle. Other major miscellaneous inputs internal to the tank farm include additions and byproducts of processes required for preparation of DWPF feed such as sludge wash water, sludge removal decant, spray washing, inhibitors, caustic used for aluminum dissolution, and recycle of wash water from the Late Wash Facility.

Of the 51 tanks, 29 are located in the H-Area tank farm and the remainder are located in F-Area tank farm. All of the tanks were built of carbon steel and reinforced concrete, but they were built with four different designs. The newest design (Type III) has a full-height secondary tank and forced (water) cooling; two designs (Types I and II) have five-foot-high secondary pans and forced cooling; the fourth design (Type IV) has a single steel wall and does not have forced cooling.

Evaporators

Each waste tank farm has two single-stage, bent-tube evaporators that are used to concentrate waste following receipt from the canyons. High-heat waste is segregated and allowed to age before evaporation. The aging allows separation of the sludge and supernate and also allows the shorter-lived radionuclides to decay to acceptable levels. Low-heat waste is sent directly to an evaporator feed tank. The sludge settles to the bottom of the feed tank, and the supernate can be processed immediately through the evaporator. Salt crystallized from high-heat waste and low-heat waste is also segregated in separate tanks because the high-heat waste must be stored for a number of years (up to 12 years) to allow decay of ^{106}Ru before DWPF processing. The low-heat waste can be processed in 0 to 3 years.

Radioactive waste, as received and stored in the tank farms, can be reduced to about 25% of its original volume and immobilized as crystallized salt by successive evaporation of the liquid supernate. Such a dewatering operation has been carried on routinely in F Area since 1960 and in H Area since 1963. Since the first evaporator facilities began operation in 1960, more than 98,489,000 gallons of space has been reclaimed. Seventy additional waste tanks valued at more than $50 million each would have been required to manage this waste had evaporation not been used.

Two evaporators currently process low-heat waste: 242-16F, and 242-16H. The 242-H evaporator processes high-heat waste and plans for the 242-16F include HHW service as well. Another evaporator, the Replacement High-Level Waste Evaporator (RHLWE), is being constructed to replace the 242-H evaporator, which cannot be reliably maintained. The new evaporator will have approximately twice the capacity of the 242-H evaporator that it replaces and will be able to accept the DWPF recycle (a low-heat waste stream of about three million gallons per year that contains very little solids) in addition to the high-heat waste. The RHLWE is currently scheduled to be on-line by August 1996.

Each evaporator is equipped with a zeolite Cesium Removal Column (CRC) located in a riser through the top of a waste storage tank. These columns remove cesium from the condensate produced by the concentration of waste supernates. The columns are normally maintained offline and placed in service if a specified decontamination factor (DF) for transfer to the Effluent Treatment Facility (ETF) is not obtained. The zeolite column is capable of achieving cesium DFs of 10 to 200. When required, the spent zeolite is discharged directly to the waste tanks beneath it.

Waste Transfer System

The primary objective of the High-Level Waste Transfer and Processing Program is to remove radioactive waste from the older style tanks and to prepare the waste, including liquid, salt, and sludge, for feed to the DWPF. The waste removal program includes removal of salt and sludge by mechanical agitators, spray washing of the tank interior walls, and steam/water cleaning of the tank

DRAFT

annuli. The waste processing program includes decontamination of the salt and liquid for incorporation into saltstone and aluminum dissolution and washing of the sludge for feed to the DWPF.

The schedules of waste transfer and waste processing are closely linked to each other and with the DWPF schedule. The scheduling objective is to remove the waste from the Types I, II, and IV tanks as rapidly as possible without exceeding the capacity of the tank farm processes or the DWPF.

Processes and equipment for waste removal and waste processing have been developed and demonstrated. Sludge removal by hydraulic slurrying and chemical cleaning with oxalic acid have been demonstrated in Tank 16H. Salt removal and sludge removal using mechanical agitation have been demonstrated. Facilities have been designed using data and experience gained from these demonstrations. To date, 3.4 million gallons of salt and 1.1 million gallons of sludge have been removed from Types I, II, and IV tanks.

New Waste Transfer Facility (NWTF)

The NWTF is currently undergoing final construction and startup testing activities. It is a series of pump tanks and a large dispersion box located within an enclosed facility and is intended to enhance the High-Level Waste Transfer and Processing Program. It is currently scheduled to begin operation in late 1993. The NWTF will replace another facility (HDB2) by providing for the transfer of radioactive slurries and solutions in H Area. It will also serve as the receipt point for recycle waste transfers from the DWPF and Late Wash facilities.

DRAFT

Extended Sludge Processing (ESP)

Sludge that is removed from waste tanks is washed in the ESP to reduce the concentrations of soluble salts from the sludge before it is fed to the DWPF. Sludge processing includes four processes: 1) aluminum dissolution (as required for H Area HHW) with sodium hydroxide and steam heat, 2) washing with inhibited water to remove dissolved solids, 3) gravity settling, and 4) decanting the salt solutions back to the tank farm for processing. Before washing, H-Area HHW sludge is mixed with sodium hydroxide to dissolve aluminum. Quantities of aluminum in other waste tanks are not sufficient to require aluminum dissolution. After aluminum dissolution, two tanks will be used to wash sludge concurrently, with the wash water from the first tank being reused to wash the sludge in the second. When washing is complete, the sludge is transferred to one tank to be fed to the DWPF; then, processing begins again using a third tank for coprocessing. Four slurry pumps supply the agitation for washing. Wash water that results from this process will either be transferred to an evaporator system or stored for reuse in dissolving saltcake, depending on the salt concentration. Tanks 21 and 23, Type IV tanks, will be used for staging this low activity wash water.

In-Tank Precipitation (ITP)

Salt will be removed from the waste tanks and processed via ITP. ITP extracts the majority of the radionuclides in the form of thick white precipitate; the material is then fed to the vitrification process in the DWPF. Radionuclides are removed by adding sodium tetraphenylborate (STPB) and sodium titanate (ST) to the ITP feed tank to precipitate cesium (and potassium) and adsorb strontium, respectively, from the dissolved waste salt solution. After filtration, the precipitate is washed with water, concentrated to 10 wt %, and transferred by batch to the feed tank for the vitrification facility. The wash water is collected and recycled into the next cycle of ITP. The decontaminated salt solution (filtrate) will be stored separately and fed to Saltstone.

F/H Effluent Treatment Facility (ETF)

Low-level aqueous streams currently sent to the F/H ETF from the 200 Areas consist of: segregated cooling water, contaminated surface runoff from the waste tank farms, laundry waste, certain evaporator overheads, cesium removal column effluent, condensate from the general purpose evaporator and acid recovery units located in Building 211, selected liquid regeneration wastes from the resin regeneration facility in H Area, water collected in H- Area catch tank from transfer line encasements, and cooling water from the tritium facilities.

DRAFT

The F/H ETF treats the waste water that was previously sent to seepage basins. The treatment process includes filtration, organic removal, reverse osmosis, and ion exchange. The facility consists of process waste water tanks, treated water tanks, basins to collect contaminated cooling water and storm water runoff and a water treatment facility.

Facilities had not previously been available for treating all types of contaminated water releases from the canyons nor were there facilities to send contaminated water in the retention basins to the tank farms for storage and/or treatment via the tank farm evaporators. The F/H ETF corrects this by providing treatment facilities for all types of low-level waste water.

Defense Waste Processing Facilty

Late Wash Facility (LW)

The Late Wash Facility (formerly the Auxiliary Pump Pit) will receive tetraphenylborate slurry material stored in ITP Tank 49 and physically remove the nitrite from the slurry by a filtration/dilution process in a stainless steel facility utilizing a crossflow filter. The nitrites are added to ITP to mitigate pitting corrosion of carbon steel waste tanks and components. Nitrites results in highboiling organics in the DWPF process which foul heat transfer surfaces and plugs filters and instrumentation. This batch operation processes approximately 3400 gallons of slurry every 43 hours. During the process, the slurry is reprecipitated to capture cesium which has returned to solution during Tank 49 storage, re-concentrated to 10-12 wt. %, and washed to remove the nitrite from

the slurry to ≤ 0.01M using a filtering dilution process. The washed slurry is transferred to the Low Point Pump Pit for subsequent transfer to the DWPF. The filtrate produced during the filtering process is stripped of benzene, checked for activity levels, chemically adjusted, and transferred to Tank 22.

Vitrification --S Area (DWPF)

The objectives of the DWPF S-Area Vitrification process is to take the liquid high-level radioactive waste currently stored at the SRS and permanently immobilize it as a glass solid. The vitrification operations include chemically treating two unique waste streams, mixing them with a ground borosilicate glass and then heating the mixture in an electric melter to 1130 degrees centigrade. The molten mixture is then poured into ten-feet-tall, two feet in diameter stainless-steel canisters and allowed to harden. The outer surface of the canisters is then decontaminated to DOT standards, welded closed and temporarily stored onsite for eventual transport to and disposal in a permanent federal geological repository.

DRAFT

Saltstone--Z Area

The DWPF Z-Area Saltstone processes low-level radioactive liquid waste salt solution from the In-Tank Precipitation Facility and the Effluent Treatment Facility. The solution is mixed with a blend of cement, flyash and blast furnace slag to form a grout. The grout is pumped in disposal vaults where it hardens into a solid nonhazardous waste form for permanent disposal.

Consolidated Incineration Facility (CIF)

The CIF, while not a portion of the HLW/DWPF System, plays an important role in the success of the waste removal mission. Benzene generated from the DWPF processing of the ITP precipitate will be incinerated in the CIF.

The CIF will be built to treat various site-generated combustible wastes before final disposal and to reduce the volume of the current inventory of wastes stored at SRS. The wastes to be treated will include wastes defined as hazardous by South Carolina Hazardous Waste Management Regulations and federal RCRA regulations, wastes contaminated with low levels of beta-gamma radioactivity, and mixed wastes that are both hazardous and low- level radioactive. The facility will not treat wastes containing dioxins or polychlorinated biphenyls (PCB's).

Facilities to be provided on the CIF project consist of a main process building which includes an area for boxed waste receipt, boxed waste handling, a rotary kiln incinerating system including incinerator ash removal and offgas cleaning, and the necessary control room and support facilities. The rotary kiln primary combustion chamber will be used for the incineration of solids and various organic and aqueous liquid wastes. A secondary combustion chamber will also incinerate organic solvent wastes as well as destroy any remaining traces of hazardous constituents in the rotary kiln offgas. Offgas exiting the secondary combustion chamber will be cooled and treated by a wet offgas treatment

system. Pollutants in the offgas will be removed to below regulatory limits before the offgas is discharged to the atmosphere.

Liquid waste from the offgas system will be solidified in the proposed Y-Area Saltstone Disposal Facility. An area is provided for installation of an existing solidification process for incinerator ash. Facilities included on the project but remote from the main process building include a liquid waste storage area.

DRAFT

Tank Farm / DWPF Operations

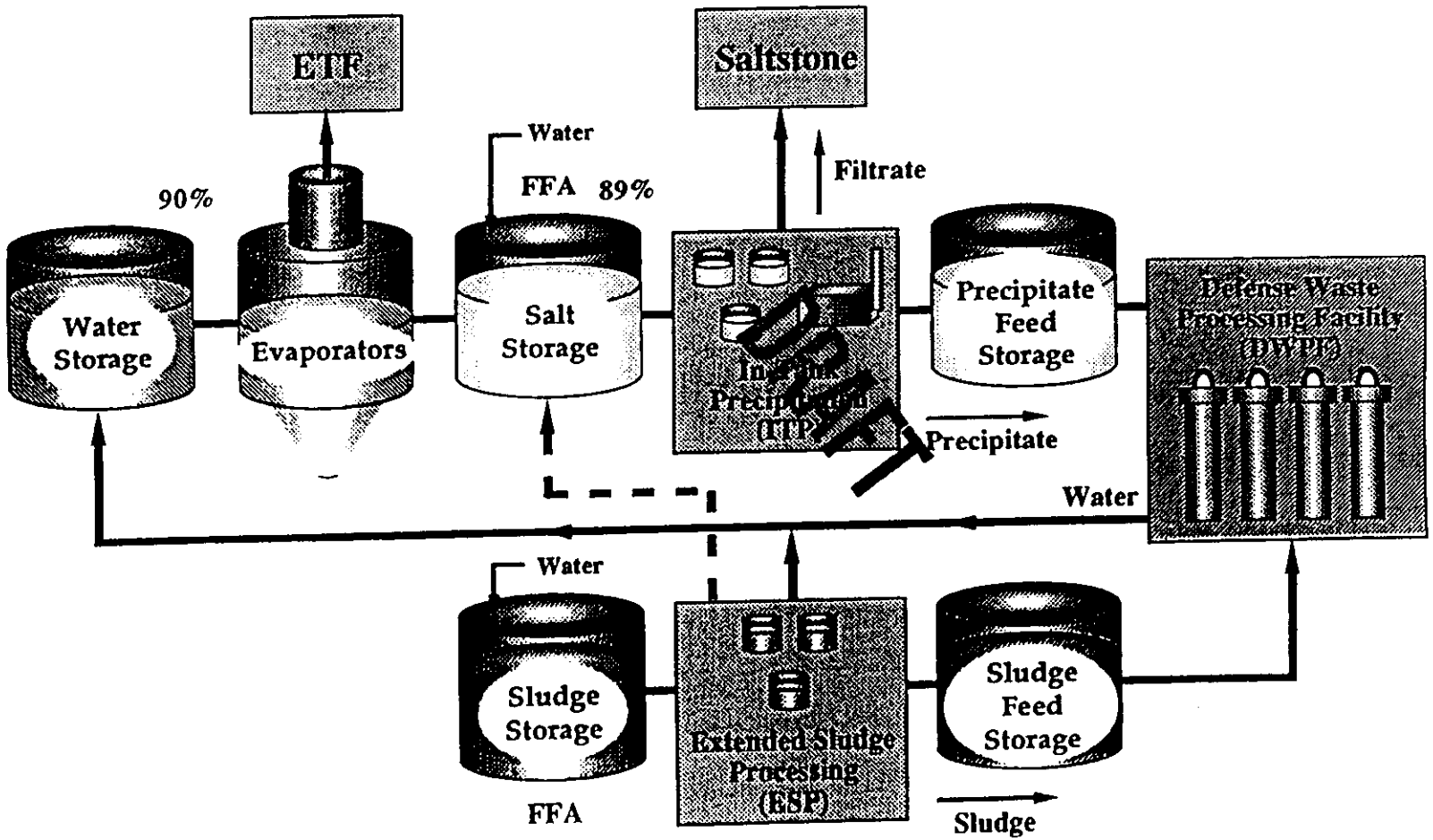

APPENDIX B

HLW/DWPF System Interaction

The attachments to Appendix B contain a brief description matrix of the extremely complex interaction between the various processes and facilities required to successfully support waste removal from the HLW Tanks. The fourth column is the key in that it lists the other facilities or processes which have a direct influence on that facilities operation.

A dozen Facilities have been characterized in the HLW/DWPF Interaction Matrix:

1. Sludge Waste Removal
2. Salt Waste Removal
3. Evaporation
4. Replacement High level Waste Evaporator (RHLWE)
5. In-Tank Precipitation (ITP)
6. Extended Sludge Processing (ESP)
7. Late Wash (LW)
8. Defense Waste Processing Facility (DWPF)
9. Saltstone
10. F/H Effluent Treatment Facility (ETF)
11. Transfer Facilities (In general)
12. Consolidated Incinerator Facility (CIF)

DRAFT

See figure at end of Appendix A for overall HLW/DWPF flowsheet. The CIF is not shown but is a direct feed from a storage tank at DWPF.

APPENDIX B

HLW/DWPF System Interaction

Process	Limiter	Solution	Dependent Upon
1. Sludge Waste Removal	1. $, time and manpower to erect steelwork, pumps, etc. 2. Manpower available/qualified 3. Chemistry Appropriate for ESP Blending 4. Transfer route available 5. ESP Processing available (Al Dissolution or not) 6. ESP rate of processing	1. Fund projects to implement in a timely manner 2. Ensure ESP space by running DWPF 3. Effective WR schedule to avoid transfer conflicts 4. Timely Analytical Results	1. Budget 2. Manpower 3. ESP Operation 4. DWPF Operation 5. Transfer Facilities Operation 6. SRTC Analytical Operations
2. Salt Waste Removal	1. $, time and manpower to erect steelwork, pumps, etc. 2. Manpower available/qualified 3. Chemistry Appropriate for ITP Blending 4. Transfer route available 5. ITP Processing available 6. ITP rate of processing 7. Tank 49 not full 8. Saltstone availability	1. Fund projects to implement in a timely manner 2. Timely Analytical Results 3. Run ITP at maximum rate 4. Run LW and DWPF at rate equal or greater than ITP 5. Run Saltstone as needed 6. Effective WR schedule to avoid transfer conflicts	1. Budget 2. Manpower 3. ITP Operation 4. LW Operation 5. DWPF Operation 6. Saltstone Operations 7. Transfer Facilities Operation 8. SRTC Analytical Operations
3. Evaporation	1. Available Concentrate Receipt (Salt Tank) Space 2. Availability of Evaporators 3. ETF capable of handling effluent	1. Run ITP to remove salt from Evaporator salt receipt tanks 2. Gain Waste Water Operating permit (for 1H Evaporator) 3. Complete construction and startup the RHLWE 4. Maintain adequate capacity in the ETF	1. Permitting Process 2. ETF Operation 3. ITP Operation
4. Replacement High Level Waste Evaporator (RHLWE)	1. $, time and manpower to complete and startup 2. Concentrate receipt space with adequate cooling 3. Tank 32 use as feed tank 4. Startup Authorization	1. Fund project to implement in a timely manner 2. Run ITP to empty Tank 29 3. Install additional cooling in Tank 29 4. Timely Readiness Reviews	1. ITP Operations 2. Authorization Process

DRAFT

Process	Limiter	Solution	Dependent Upon
5. In-Tank Precipitation (ITP)	1. $, time and manpower to complete and startup 2. Startup Authorization 3. Successful startup testing 4. Available Feed from Salt Tanks 5. Tank 49 not full 6. Tank 50 not full 7. Saltstone operational 8. Saltstone Vaults Available	1. Fund project to implement in a timely manner 2. Timely Readiness Reviews 3. Receipt of Waste Water Operating Permit 3. Prompt resolution of process technology concerns 4. Timely availability of salt waste removal projects 5. Startup LW and DWPF before Tank 49 is full 6. Evaluate use of supernate as feed to ITP in lieu of salt waste removal operation	1. Authorization Process 2. Permitting Process 3. Saltstone Operation 4. LW Operation 5. DWPF Operation 6. Waste Removal Operations 7. Transfer Facility Operation
6. Extended Sludge Processing (ESP)	1. Manpower to support startup 2. Startup Authorization 3. Available Feed from Sludge Tanks 4. Evaporator System capacity to handle wash water transfers, evaporation and salt content 5. Tank 21 use for wash water 6. Processing space available in ESP Tanks 7. Processing cycles as required to meet DWPF feed acceptance criteria 8. DWPF capable of receiving sludge	1. Timely Readiness Reviews 2. Timely availability of sludge waste removal projects 3. Maintain Evaporator on line 4. Complete Batch #1 and feed to DWPF	1. Authorization process 2. Management of personnel resources 3. Waste Removal Operations 4. Evaporation Operations 5. DWPF Operations 6. Transfer Facility Operation
7. Late Wash (LW)	1. Fund and implement in a timely manner 2. Startup Authorization 2. Tank 22 available for recycle of wash water 3. DWPF on line 4. Feed available from Tank 49	1. Fund projects to implement in a timely manner 2. Timely Readiness Reviews 3. Run ITP to supply feed to Tank 49 4. Run ITP to maintain level in Tank 22 5. Run DWPF to accept Feed	1. Budget 2. Permitting Action 3. Authorization process 4. ITP Operation 5. DWPF Operation 6. Transfer Facility Operation 7. Saltstone Operation

DRAFT

Process	Limiter	Solution	Dependent Upon
8. Defense Waste Processing Facility (DWPF)	1. Startup Authorization 2. Successful Cold Chemical Runs 3. Availability of sludge feed 4. Availability of precipitate feed 5. Tank Farm capable of handling the recycle water 6. Benzene appropriate stored or incinerated	1. Timely Readiness Reviews 2. Prompt resolution of process technology concerns 3. Run ESP 4. Run LW from Tank 49 5. Run ITP 6. Maintain and increase Evaporator capacity 7. Implement CIF project	1. Budget 2. Permitting Action 3. Authorization process 4. ESP Operation 5. LW Operation 6. ITP Operation 7. Evaporator Operation 8. Transfer Facility Operation 9. CIF Operation
9. Saltstone	1. Feed available from Tank 50 2. Single shift operation 3. Vaults must be available	1. Run ITP and ETF 2. Man two shift operation if required 3. Timely funding and construction of new vaults	1. Budget 2. ITP Operation 3. ETF Operation
10. F/H Effluent Treatment Facility (ETF)	1. Feeds must meet acceptance criteria 2. Operational utility 3. Tank 50 not full	1. Maintain controls on generator for feed 2. Implement utility improvements as required 3. Run Saltstone	1. Evaporator Operations 2. Canyon Evaporator Operations 3. Saltstone Operation
11. Transfer Facilities New Waste Transfer Facility (NWTF) Diversion Boxes Inter Area Lines Pump Pit Facilities, etc.	1. Jumper changes required 2. Weather can extend maintenance duration 3. Limited number of transfer routes available 4. Operational utility	1. Support projects as practical to enclose high traffic diversion boxes 2. Effective scheduling of waste transfers 3. Implement utility improvements as required	1. Weather 2. Budget
12. Consolidated Incinerator Facility (CIF)	1. $, time and manpower to complete and startup 2. Permitting Process 3. Startup Authorization 4. Provide for secondary waste treatment or disposal 5. Availability of Benzene feed	1. Fund project to implement in a timely manner 2. Timely Readiness Reviews 3. Implement CIF operation before Benzene Storage at DWPF is full	1. Budget 2. DWPF 3. Mixed Waste/ hazardous Waste Facility (Also new project)

DRAFT

APPENDIX C

Appendix C shows the current waste removal plan for type I, II and IV tanks. These tanks do not meet the standards for secondary containment as outlined in the Federal Facilities Agreement (FFA).

The key start dates are based on a six-month planning window with the first triangle indicating the early start date for actual removal of waste from the tank. The early start date is six months before the current processing need date for ITP or ESP. (Note that the associated waste removal project action typically precedes the actual waste removal by 30-36 months.)

The solid line shows the duration for completing the waste removal, installation of water washing facilities and final rinse of the tank and annulus (if required).

The last triangle shows the late finish date for completion of waste removal. This includes six months for verification of tank status and turnover to environmental restoration.

DRAFT

WASTE REMOVAL PLAN FOR TYPE I, II, & IV TANKS

TANK#	TYPE	FY93	FY94	FY95	FY96	FY97	FY98	FY99	FY00	FY01	FY02	FY03	FY04	FY05	FY06	FY07
01	I							SS				RC				
02	I								SS			RC				
03	I								SS				RC			
04	I						SU		RC							
05	I						SU			RC						
06	I							SU		RC						
07	I							SU					RC			
08	I				SU		RC									
09	I								SS						RC	
10	I									SS					RC	
11	I				SU		RC									
12	I						SU			RC						
13	II									SU			RC			
14	II					SS				RC						
15	II			SU			RC									

DRAFT

LEGEND	SALT STARTUP SS	SLUDGE STARTUP SU	WASTE REMOVAL OPS COMPLETE RC	DURATION ———	TANK USED TO TRANSFER 1, 2 & 3

11/03/92

WASTE REMOVAL PLAN FOR TYPE I, II, & IV TANKS

TANK#	TYPE	FY93	FY94	FY95	FY96	FY97	FY98	FY99	FY00	FY01	FY02	FY03	FY04	FY05	FY06	FY07
16	II	Waste Removal Complete														
17	IV									SU		RC				
18	IV									SU			RC			
19	IV									SU		RC				
20	IV	Waste Removal Complete														
21	IV												SU		RC	
22	IV											SU		RC		
23	IV												SU		RC	
24	IV												SU		RC	

DRAFT

LEGEND: SALT STARTUP (SS); SLUDGE STARTUP (SU); WASTE REMOVAL OPS COMPLETE (RC); DURATION ———; TANK USED TO TRANSFER 1, 2 & 3 .....

11/03/92

APPENDIX D

HLW/DWPF Integrated Schedule

The Integrated Schedule show the major facilities, key activities and inter-relationships required to support the HLW Management Plan.

Replacement High Level Waste Evaporator - [S-4062]
Driver: Process DWPF recycle, ESP wash water and maintain space in tank farm

Key Date(s): August '96 - Begin operations

In-Tank Precipitation - [S-3781]
Driver: Provide salt receipt space in tank farm and provide feed to DWPF

Key Date(s): April '93 - Begin processing tank 41
October '95 - Provide combined precipitate and sludge feed to DWPF

Extended Sludge Processing - [S-2781]
Driver: Remove waste from old tanks and provide feed to DWPF

Key Date(s): April '93 - Resume washing of Sludge Batch 1 feed to DWPF
June '94 - Provide initial sludge only feed to DWPF

Defense Waste Processing Facility - [S-1780]
Driver: FFCA commitment to process LDR waste.

Key Date(s): December '93 - Begin mercury run and recycle stream to HLW area
December '93 - FFCA commitment to begin processing LDR waste
June ' 94 - Begin sludge only operations
October '95 - Begin combined sludge and precipitate operations

DWPF & Saltstone Projects
Driver: Construct new vaults and other key equipment needs

New Waste Transfer Facility - [S-3122]
Driver: DWPF recycle waste stream beginning with mercury runs

Key Date(s): December '93 - Begin DWPF mercury runs

DRAFT

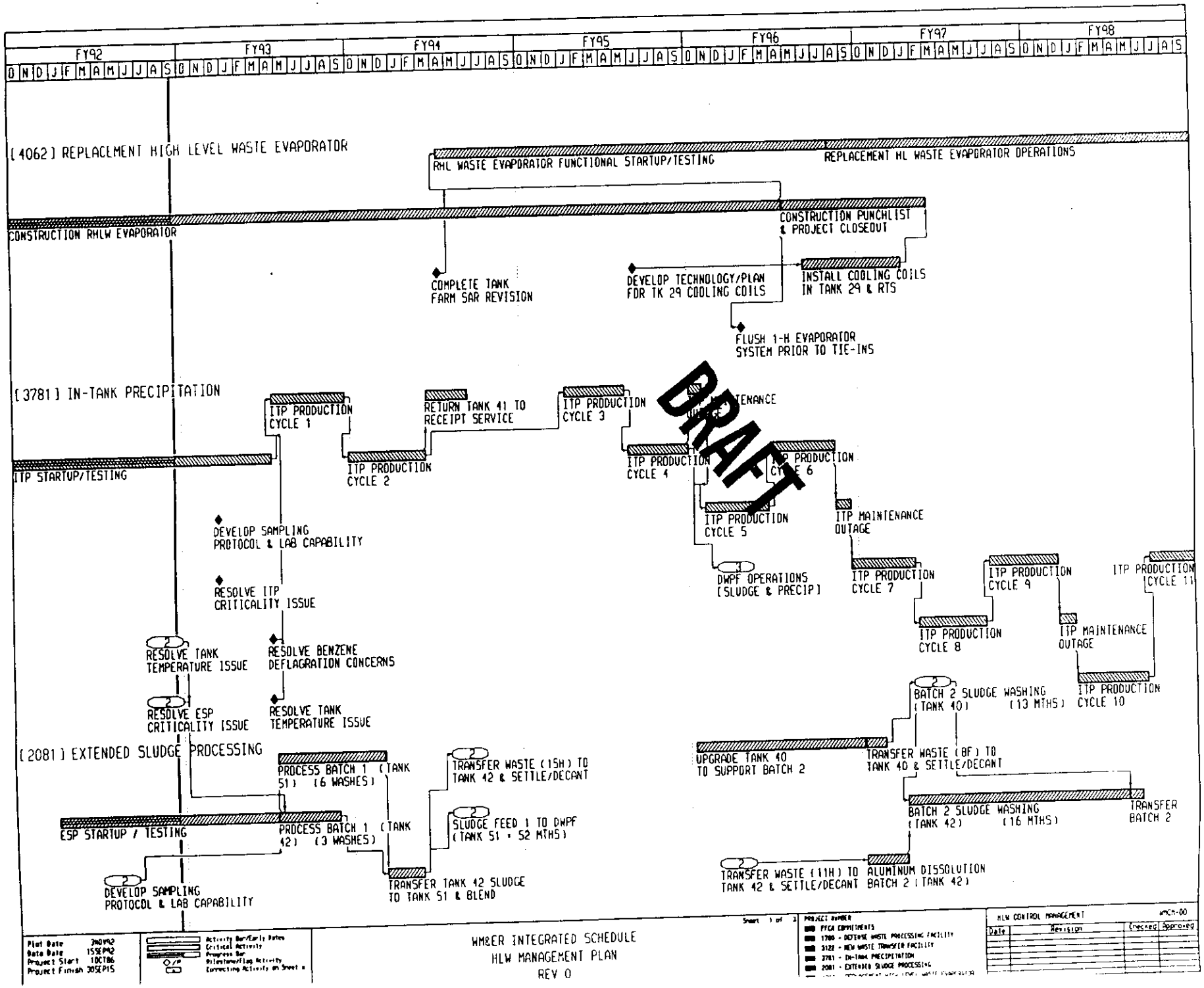
FY92
FY93
FY94
FY95
FY96
FY97
FY98
O N D J F M A M J J A S
[4062] REPLACEMENT HIGH LEVEL WASTE EVAPORATOR
RHL WASTE EVAPORATOR FUNCTIONAL STARTUP/TESTING
REPLACEMENT HL WASTE EVAPORATOR OPERATIONS
CONSTRUCTION RHLW EVAPORATOR
CONSTRUCTION PUNCHLIST & PROJECT CLOSEOUT
COMPLETE TANK FARM SAR REVISION
DEVELOP TECHNOLOGY/PLAN FOR TK 29 COOLING COILS
INSTALL COOLING COILS IN TANK 29 & RTS
FLUSH 1-H EVAPORATOR SYSTEM PRIOR TO TIE-INS
[3781] IN-TANK PRECIPITATION
ITP PRODUCTION CYCLE 1
RETURN TANK 41 TO RECEIPT SERVICE
ITP PRODUCTION CYCLE 3
ITP STARTUP/TESTING
ITP PRODUCTION CYCLE 2
ITP PRODUCTION CYCLE 4
ITP PRODUCTION CYCLE 5
ITP MAINTENANCE OUTAGE
DWPF OPERATIONS [SLUDGE & PRECIP]
ITP PRODUCTION CYCLE 7
ITP PRODUCTION CYCLE 8
ITP PRODUCTION CYCLE 9
ITP MAINTENANCE OUTAGE
ITP PRODUCTION CYCLE 10
ITP PRODUCTION CYCLE 11
DEVELOP SAMPLING PROTOCOL & LAB CAPABILITY
RESOLVE ITP CRITICALITY ISSUE
RESOLVE TANK TEMPERATURE ISSUE
RESOLVE BENZENE DEFLAGRATION CONCERNS
RESOLVE ESP CRITICALITY ISSUE
RESOLVE TANK TEMPERATURE ISSUE
[2081] EXTENDED SLUDGE PROCESSING
PROCESS BATCH 1 (TANK 51) (6 WASHES)
TRANSFER WASTE (15H) TO TANK 42 & SETTLE/DECANT
ESP STARTUP / TESTING
PROCESS BATCH 1 (TANK 42) (3 WASHES)
SLUDGE FEED 1 TO DWPF (TANK 51 = 52 MTHS)
DEVELOP SAMPLING PROTOCOL & LAB CAPABILITY
TRANSFER TANK 42 SLUDGE TO TANK 51 & BLEND
BATCH 2 SLUDGE WASHING (TANK 40) (13 MTHS)
UPGRADE TANK 40 TO SUPPORT BATCH 2
TRANSFER WASTE (8F) TO TANK 40 & SETTLE/DECANT
BATCH 2 SLUDGE WASHING (TANK 42) (16 MTHS)
TRANSFER BATCH 2
TRANSFER WASTE (11H) TO TANK 42 & SETTLE/DECANT
ALUMINUM DISSOLUTION BATCH 2 (TANK 42)
DRAFT
Plot Date 3NOV92
Data Date 15SEP92
Project Start 10CT86
Project Finish 30SEP15
Activity Bar/Early Dates
Critical Activity
Progress Bar
Milestone/Flag Activity
Connecting Activity on Sheet x
WM&ER INTEGRATED SCHEDULE
HLW MANAGEMENT PLAN
REV 0
Sheet 1 of 3
PROJECT NUMBER
FFCA COMMITMENTS
1700 - DEFENSE WASTE PROCESSING FACILITY
3122 - NEW WASTE TRANSFER FACILITY
3781 - IN-TANK PRECIPITATION
2081 - EXTENDED SLUDGE PROCESSING
HLW CONTROL MANAGEMENT
WMCM-00
Date
Revision
Checked
Approved

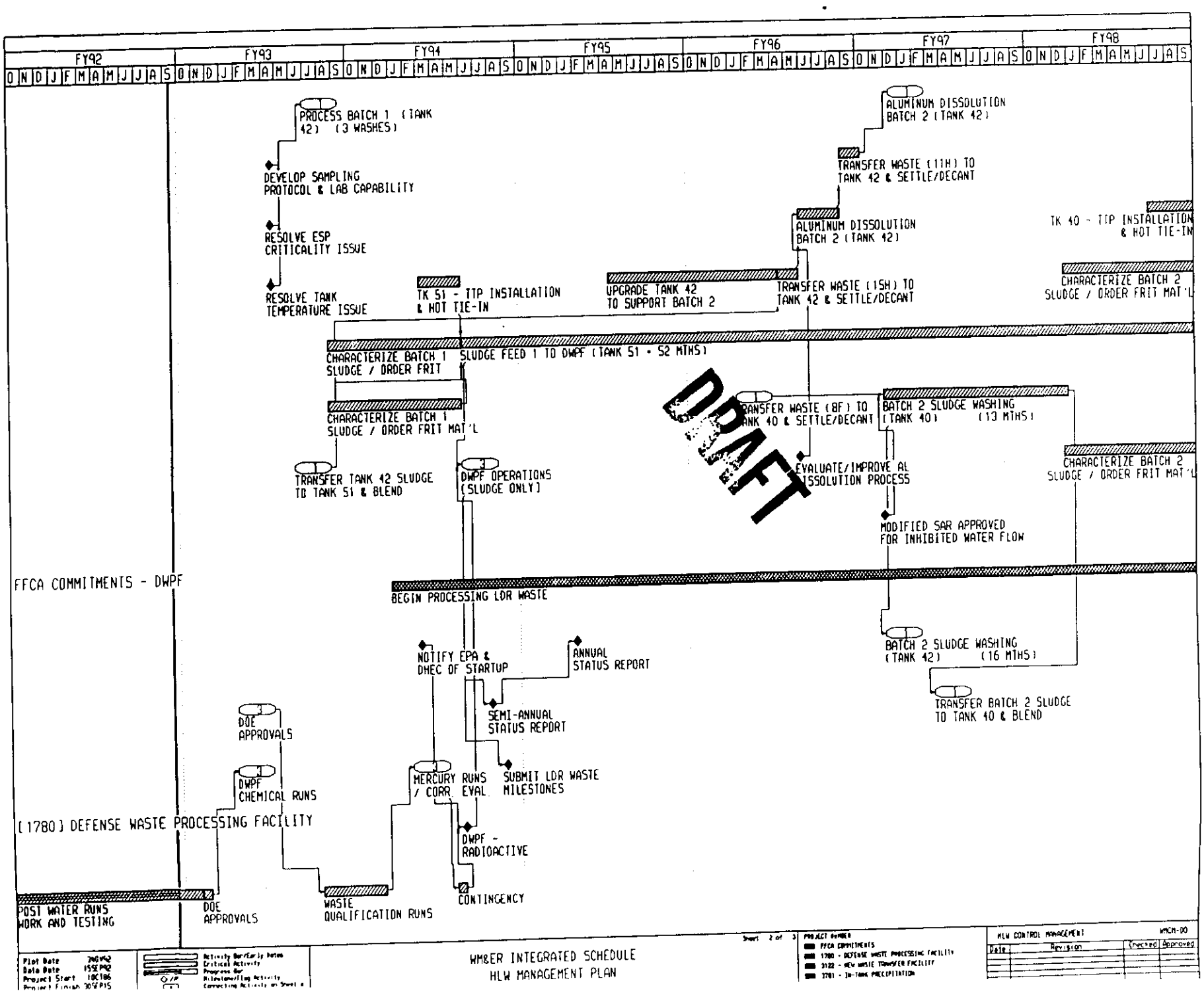
FY92
FY93
FY94
FY95
FY96
FY97
FY98
PROCESS BATCH 1 (TANK 42) (3 WASHES)
DEVELOP SAMPLING PROTOCOL & LAB CAPABILITY
RESOLVE ESP CRITICALITY ISSUE
RESOLVE TANK TEMPERATURE ISSUE
TK 51 - TTP INSTALLATION & HOT TIE-IN
UPGRADE TANK 42 TO SUPPORT BATCH 2
TRANSFER WASTE (15H) TO TANK 42 & SETTLE/DECANT
ALUMINUM DISSOLUTION BATCH 2 (TANK 42)
TRANSFER WASTE (11H) TO TANK 42 & SETTLE/DECANT
ALUMINUM DISSOLUTION BATCH 2 (TANK 42)
TK 40 - TTP INSTALLATION & HOT TIE-IN
CHARACTERIZE BATCH 2 SLUDGE / ORDER FRIT MAT'L
CHARACTERIZE BATCH 1 SLUDGE / ORDER FRIT
SLUDGE FEED 1 TO DWPF (TANK 51 - 52 MTHS)
CHARACTERIZE BATCH 1 SLUDGE / ORDER FRIT MAT'L
TRANSFER TANK 42 SLUDGE TO TANK 51 & BLEND
DWPF OPERATIONS (SLUDGE ONLY)
TRANSFER WASTE (8F) TO TANK 40 & SETTLE/DECANT
BATCH 2 SLUDGE WASHING (TANK 40) (13 MTHS)
EVALUATE/IMPROVE AL DISSOLUTION PROCESS
CHARACTERIZE BATCH 2 SLUDGE / ORDER FRIT MAT'L
MODIFIED SAR APPROVED FOR INHIBITED WATER FLOW
DRAFT
FFCA COMMITMENTS - DWPF
BEGIN PROCESSING LDR WASTE
NOTIFY EPA & DHEC OF STARTUP
ANNUAL STATUS REPORT
SEMI-ANNUAL STATUS REPORT
SUBMIT LDR WASTE MILESTONES
BATCH 2 SLUDGE WASHING (TANK 42) (16 MTHS)
TRANSFER BATCH 2 SLUDGE TO TANK 40 & BLEND
DOE APPROVALS
DWPF CHEMICAL RUNS
MERCURY RUNS / CORR. EVAL.
[1780] DEFENSE WASTE PROCESSING FACILITY
DWPF - RADIOACTIVE
CONTINGENCY
POST WATER RUNS WORK AND TESTING
DOE APPROVALS
WASTE QUALIFICATION RUNS
Plot Date 3NOV92
Data Date 15SEP92
Project Start 10CT86
Project Finish 30SEP15
Activity Bar/Early Dates
Critical Activity
Progress Bar
Milestone/Flag Activity
Connecting Activity on Sheet 2
WM&ER INTEGRATED SCHEDULE
HLW MANAGEMENT PLAN
Sheet 2 of 3
PROJECT NUMBER
FFCA COMMITMENTS
1780 - DEFENSE WASTE PROCESSING FACILITY
3122 - NEW WASTE TRANSFER FACILITY
3701 - IN-TANK PRECIPITATION
HLW CONTROL MANAGEMENT
WMCM-00
Date
Revision
Checked
Approved

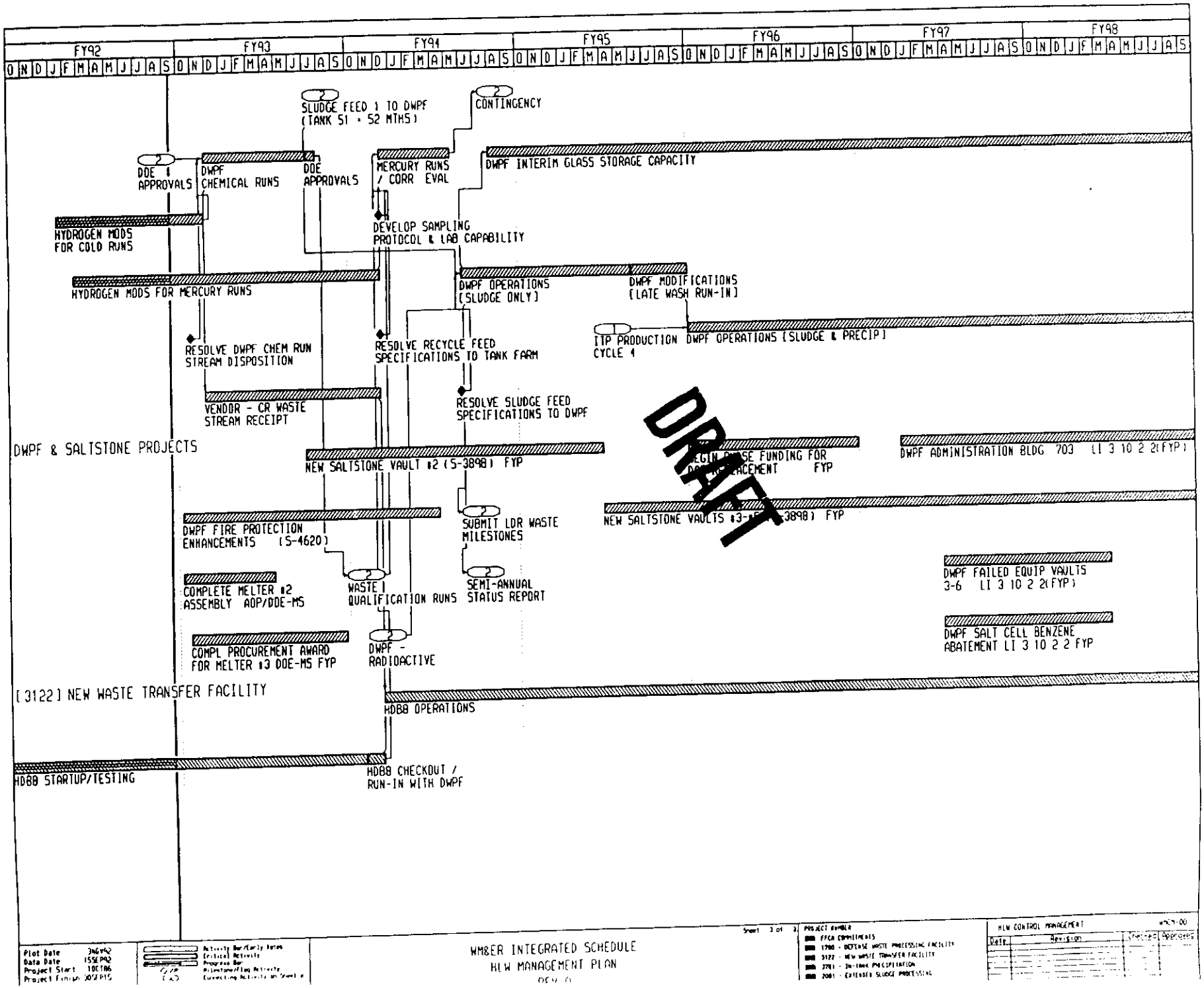
FY92
FY93
FY94
FY95
FY96
FY97
FY98
O N D J F M A M J J A S
SLUDGE FEED 1 TO DWPF (TANK 51 - 52 MTHS)
CONTINGENCY
DOE & APPROVALS
DWPF CHEMICAL RUNS
DOE APPROVALS
MERCURY RUNS / CORR EVAL
DWPF INTERIM GLASS STORAGE CAPACITY
HYDROGEN MODS FOR COLD RUNS
DEVELOP SAMPLING PROTOCOL & LAB CAPABILITY
HYDROGEN MODS FOR MERCURY RUNS
DWPF OPERATIONS (SLUDGE ONLY)
DWPF MODIFICATIONS (LATE WASH RUN-IN)
RESOLVE DWPF CHEM RUN STREAM DISPOSITION
RESOLVE RECYCLE FEED SPECIFICATIONS TO TANK FARM
ITP PRODUCTION CYCLE 1
DWPF OPERATIONS (SLUDGE & PRECIP)
VENDOR - CR WASTE STREAM RECEIPT
RESOLVE SLUDGE FEED SPECIFICATIONS TO DWPF
DRAFT
DWPF & SALTSTONE PROJECTS
NEW SALTSTONE VAULT #2 (S-3898) FYP
FYP
DWPF ADMINISTRATION BLDG 703 LI 3 10 2 2(FYP)
DWPF FIRE PROTECTION ENHANCEMENTS (S-4620)
SUBMIT LDR WASTE MILESTONES
NEW SALTSTONE VAULTS
FYP
DWPF FAILED EQUIP VAULTS 3-6 LI 3 10 2 2(FYP)
COMPLETE MELTER #2 ASSEMBLY AOP/DOE-MS
WASTE QUALIFICATION RUNS
SEMI-ANNUAL STATUS REPORT
DWPF SALT CELL BENZENE ABATEMENT LI 3 10 2 2 FYP
COMPL PROCUREMENT AWARD FOR MELTER #3 DOE-MS FYP
DWPF - RADIOACTIVE
[3122] NEW WASTE TRANSFER FACILITY
HDB8 OPERATIONS
HDB8 STARTUP/TESTING
HDB8 CHECKOUT / RUN-IN WITH DWPF
Plot Date 3NOV92
Data Date 15SEP92
Project Start 1OCT86
Project Finish 30SEP15
Activity Bar/Early Dates
Critical Activity
Progress Bar
Milestone/Flag Activity
Connecting Activity on Sheet #
WM&ER INTEGRATED SCHEDULE
HLW MANAGEMENT PLAN
REV. 0
Sheet 3 of 3
PROJECT NUMBER
FFCA COMMITMENTS
1700 - DEFENSE WASTE PROCESSING FACILITY
3122 - NEW WASTE TRANSFER FACILITY
3701 - IN-TANK PRECIPITATION
2001 - EXTENDED SLUDGE PROCESSING
HLW CONTROL MANAGEMENT
Date
Revision
Checked
Approved

APPENDIX E

Appendix E shows the current waste removal plan for type III tanks. Waste removal from these tanks is required to maintain adequate emergency space in the tank farm, operating space for the evaporator systems, surge capacity for large transfers of ESP wash water and DWPF recycle and continuity of feed to DWPF.

The key start dates are based on a six-month planning window with the first triangle indicating the early start date for actual removal of waste from the tank. The early start date is six months before the current need date. (Note that the associated waste removal project action typically precedes the initial waste removal by 30-36 months.)

The solid line shows the duration for completing the waste removal and returning the tank to service.

The last triangle shows the early finish date for completion of waste removal and availability of the tank to be returned to service.

DRAFT

WASTE REMOVAL PLAN FOR TYPE III TANKS

TANK#	TYPE	FY93	FY94	FY95	FY96	FY97	FY98	FY99	FY00	FY01	FY02	FY03	FY04	FY05	FY06	FY07
25	III		SS	TA												
26	III									SU	TA					
27	III													SS		
28	III				SS		TA									
29	III			SS		TA										
30	III										SS			TA		
31	III					SS										
32	III											SU	TA			
33	III											SU	TA			
34	III											SU	TA			
35	III										SU	TA				
36	III											SS			TA	
37	III										SS			TA		
38	III						SS			TA						
39	III												SU	TA		

DRAFT

LEGEND	SALT STARTUP SS	SLUDGE STARTUP SU	TANK AVAILABLE FOR SERVICE TA	DURATION ———

11/03/92

WASTE REMOVAL PLAN FOR TYPE III TANKS

TANK#	TYPE	FY93	FY94	FY95	FY96	FY97	FY98	FY99	FY00	FY01	FY02	FY03	FY04	FY05	FY06	FY07
40	III	*														
41	III	SS	TA										SU			TA
42	III	*														
43	III											SU	TA			
44	III													SS		
45	III														SS	
46	III															SS 10/29/07
47	III					SS										
48	III	**														
49	III	**														
50	III	**														
51	III	*														

DRAFT

LEGEND: SALT STARTUP SS; SLUDGE STARTUP SU; TANK AVAILABLE FOR SERVICE RC; DURATION ———; * ESP TANKS; ** ITP TANKS

11/03/92

Appendix F

The following attachments describe the key milestones to support the HLW Plan. The milestone date and reference documentation is also listed:

F.1 HLW

F.2 DWPF

F.3.1 SRTC - IWT

F.3.2 SRTC - DWPT

DRAFT

ATTACHMENT F.1

HLW WASTE REMOVAL DOE BASED MILESTONES

The HLW Waste Removal DOE based milestones relative to execution of this schedule are listed in the following table. Included are milestones from the approved FY93 Annual Operating Plan (AOP) and from the FY94 Five Year Plan (FYP) Planning Case (See Note below). Only milestones related to the Waste Removal Program and space gain initiatives are included in this listing.

DRAFT

DOCUMENT	APPROX. DATE GENERATED
1) FY93 AOP	8/92
2) FY94 FYP	*10/92

* Note: FY94 FYP Milestones revised per DOE-HQ direction to reflect new funding values. (D. Wayne Nobles to L. Watkins, October 14, 1992)

HLW WASTE REMOVAL MILESTONES

HLW	DESCRIPTION	DATE	TDS	ADS
	• Restart 242-H Evaporator	9/30/92		32AA.2
	• Submit revision 0 of Waste Removal schedule to DOE.	11/5/92	1.05.03	
	• Start salt removal from Tank 41.	12/18/92		
	• Submit FY93 Liquid Waste Forecast.	12/31/92	1.05.03	
	• Rejumper HDB 4 to support ITP, NWTF, transfers, and future waste removal	3/31/93	1.05.02.01.01	
	• Complete HPP5 & 6 Leak Detection Boxes (LDBs) 5-7 replacement and back fill area	3/31/93	1.05.02.01.01	
	• Initiate salt removal from Tank 25	10/2[illegible]		33AA.1
	• Initiate sludge removal from Tanks: 5/6/8			33AA.3
	5	6/29/98		33AA.3
	6	12/26/98		33AA.3
	8	12/2/96		33AA.3
	• Fabricate Jumpers to support preparation of 2F Evaporator HHW processing	4/30/93	1.05.03.01.02.0	
	• Repair CRC column on Tank 27 to support preparation of 2F Evaporator HHW processing	6/30/93	1.05.03.01.02.0	
	• Initiate HHW processing through 2F Evaporator	7/1/93	1.05.03.01.01	
	• Rejumper HDB 2 to support ITP, NWTF, transfers ,and future waste removal	8/30/93	1.05.02.01.01	

DRAFT

HLW WASTE REMOVAL MILESTONES

HLW	DESCRIPTION	DATE	TDS	ADS
	• Complete FDB 6 LDB repair to support F-Area Tank Farm Evaporator operations	9/30/93	1.05.03.01.02.0	
	• Recover 240,000 gal of space after initiation of HHW processing in the 2F Evaporator) (3 mon of ops)	9/30/93	1.05.03.01.01	
	• Repair Tank 43 leak detection box (LDB)	9/30/93	1.05.02.01.01	
	• Repair Tank 38 gravity drain line (GDL)	9/30/93	1.05.02.01.01	
	• Reclaim 250,000 gal of LHW using 2H Evaporator	9/30/93	1.05.02.01.01	
	• Reclaim 1M gal of HHW using 1H Evaporator (reduced 8,000 gal/mon if 1H not restarted)	9/30/93	1.05.02.01.01	
	• Initiate operation of NTWF	12/9/93		32AA.3
	• Control Room (241-2H) in service	3/31/94		32AA.4
	• Tanks 11 & 15 (Slurry Only)			32AA.6
	11	12/29/95		32AA.6
	15	9/15/95		32AA.6
	• Initiate Salt Removal from Tank 14	5/11/97		32AA.7
	• Initiate radioactive operation of RHLWE	3/30/95		32AA.15
	• Initiate salt removal from Tank 47	11/4/96		33AA.8
	• Initiate Waste Removal from Tank 29	8/2/95		32AA.10
	• Initiate sludge removal from Tank 47	4/27/99		33AA.9

DRAFT

HLW WASTE REMOVAL MILESTONES

HLW	DESCRIPTION	DATE	TDS	ADS
	• Initiate sludge removal from Tank 4	2/1/98		33AA.10
	• Initiate Sludge Removal from Tanks 12 & 14			32AA.14
	12	5/31/98		32AA.14
	14	8/30/98		32AA.14
	• Initiate Waste Removal from Tank 21	12/19/03		32AA.16
	• Initiate Waste Removal from Tank 31	10/19/97		32AA.17
	• Water Wash Tank 21	5/9/05		32AA.18
	• Initiate Waste Removal from Tank 9	7/23/99		32AA.19
	• Reclaim 15 M gal of tank volume (using 1H, 2H and RHWL)	9/30/98		32AA.20
	• Return Tank 31 to receipt service	6/5/01		32AA.22
	• Annulus cleaning and water wash tanks :			32AA.23
	12	4/12/00		32AA.23
	14	4/12/00		32AA.23
	• Initiate Waste Removal from Tank 38	7/23/99		32AA.24

DRAFT

HLW WASTE REMOVAL MILESTONES

HLW	DESCRIPTION	DATE	TDS	ADS
THE FOLLOWING ARE PROJECT SPECIFIC MILESTONES				
Note: ADS milestones listed in this section were generated by Waste Management Control Management (WMCM) and Engineering & Projects Division (E&PD) during the FY94 FYP development.				
	• Waste Removal & Extended Sludge Processing (S-2081)		1.05.17.02.03.02	
	– Complete installation of slurry pump modifications (Tanks 42 & 51)	10/30/92		
	– Complete modifications to 241-74H Control Room	9/30/93		
	– Complete modifications to Tanks 21 and 22	9/30/93		
	• Type III Tanks Salt Removal, Phase II (S-2860)		1.05.17.02.01.02	
	– Award "Old Hill" DCS Contract	9/30/93		
	– Award Lump Sum Contract for the 241-2H Control Room	9/30/93		
	• Type III Tanks Salt Removal, Phase I (S-3291)		1.05.17.02.02.02	
	– Complete seismic study for Tanks 25, 28 and 29	3/30/93		
	– Complete TNX run-in of Tanks 25 slurry pumps	9/30/93		
	• High Level Waste Removal from Filled Waste Tanks (S-3025)		1.05.17	
	– Start Title I design	7/1/93		
	• New Waste Transfer Facility (S-3122)		1.05.12	
	– Construction complete	12/30/92		
	• Replacement High Level Waste Evaporator (S-4062)		1.05.13	
	– Title II design complete	9/30/93		
	• Diversion Box and Pump Pit Containment Building (S-2821)		1.05.14	
	– Procurement complete	11/30/92		
	• Tank 25F, Waste Removal Facilities-Mechanical Completion	3/31/93		314-LI.1
	• Tank 25F, Waste Removal Facilities-Complete Turnover to Operations	10/1/94		314-LI.2

DRAFT

HLW WASTE REMOVAL MILESTONES

HLW	DESCRIPTION	DATE	TDS	ADS
	• Tank 5F, Waste Removal Facilities-Mechanical Completion	1/27/98		314-LI.4
	• Tank 8F, Waste Removal Facilities-Mechanical Completion	9/12/95		314.LI.5
	• New Control Room 241-2H-Mechanical Completion	3/31/94		314.LI.6
	• Tank 11H, Waste Removal Facilities-Mechanical Completion	7/29/95		314-LI.7
	• Tank 5F, Waste Removal Facilities-Complete Turnover to Operations	6/28/98		314-LI.8
	• Tank 8F, Waste Removal Facilities-Complete Turnover to Operations	2/11/96		314-LI.9
	• Tank 28F, Waste Removal Facilities-Mechanical Completion	7/1/94		314-LI.10
	• Tank 11H, Waste Removal Facilities-Complete Turnover to Operations	12/28/95		314-LI.11
	• Tank28F, Waste Removal Facilities-Complete Turnover to Operations	11/29/94		314-LI.12
	• Tanks 35H, 36H, 37H, 38H, 44F-Title I Design complete	5/30/94		314-LI.13
	• Tank 29H, Waste Removal Facilities-Mechanical Completion	9/30/94		314-LI.14
	• Tank 29H, Waste Removal Facilities-Complete Turnover to Operations	8/1/95		314-LI.15
	• Tank 3F, Waste Removal Facilities-Mechanical Completion	9/11/96		314-LI.18
	• Tanks 35H, 37H, 38H, 39H-Title II Design Complete	4/30/97		314-LI.19
	• Tank 6F, Waste Removal Facilities-Mechanical Completion	7/26/98		314-LI.20
	• Tank 3F, Waste Removal Facilities-Complete Turnover to Operations	2/9/97		314-LI.21

DRAFT

HLW WASTE REMOVAL MILESTONES

HLW	DESCRIPTION	DATE	TDS	ADS
	• Tank 10H, Waste Removal Facilities-Mechanical Completion	2/19/03		314-LI.23
	• Tank 6F, Waste Removal Facilities-Complete Turnover to Operations	12/25/98		314-LI.22
	• Tank 47F, Waste Removal Fac ilities-Mechanical Completion	6/5/96		314-LI.24
	• Tank 10H, Waste Removal Facilities-Complete Turnover to Operations	7/21/03		314-LI.25
	• Tanks 36H, 44F-Title II Design Complete	12/30/97		314-LI.26
	• Tank 47F, Waste Removal Facilities-Complete Turnover to Operations	11/3/96		314-LI.27
	• Tank 14H, Waste Removal Facilities-Mechanical Completion	12/8/96		314-LI.28
	• Tank 14H, Waste Removal Facilities-Complete Turnover to Operations	5/10/97		314-LI.29
	• Waste Removal Equipment Storage Facility-Mechanical Completion	5/31/98		314-LI.30
	• Works Engineering Support Facility-241-4H-Mechanical Completion	8/30/97		314-LI.31
	• Tanks 35H, Waste Removal Facilities-Mechanical Completion	5/4/01		314-LI.32
	• Tank 38H, Waste Removal Facilities-Mechanical Completion	2/21/99		314-LI.33
	• Tank 39H, Waste Removal Facilities-Mechanical Completion	6/15/03		314-LI.34
	• Caustic Addition Facility-Mechanical Completion	10/31/98		314-LI.35
	• Tank31H, Waste Removal Facilities-Mechanical Completion	5/20/97		314-LI.36
	• Tanks 35H, Waste Removal Facilities-Complete Turnover to Operations	10/3/01		314-LI.37

DRAFT

HLW WASTE REMOVAL MILESTONES

HLW	DESCRIPTION	DATE	TDS	ADS
	• Tanks 38H, Waste Removal Facilities-Complete Turnover to Operations	7/22/99		314-LI.38
	• Tanks 39H, Waste Removal Facilities-Complete Turnover to Operations	11/13/03		314-LI.16
	• Tank 31H, Waste Removal Facilities-Complete Turnover to Operations	10/18/97		314-LI.39
	• Tank 37H, Waste Removal Facilities-Mechanical Completion	7/6/00		314-LI.40
	• Tank 4F, Waste Removal Facilities-Mechanical Completion	9/1/97		314-LI.41
	• Tank 7F, Waste Removal Facilities-Mechanical Completion	9/27/98		314-LI.42
	• Tanks 37H, Waste Removal Facilities-Complete Turnover to Operations	12/4/00		314-LI.43
	• Tank 4F, Waste Removal Facilities-Complete Turnover to Operations	1/31/98		314-LI.44
	• Tank 7F, Waste Removal Facilities-Complete Turnover to Operations	2/26/99		314-LI.45
	• Tank 44F, Waste Removal Facilities-Mechanical Completion	5/31/01		314-LI.46
	• Tank 44F, Waste Removal Facilities-Complete Turnover to Operations	10/30/01		314-LI.47
	• Tank 36H, Waste Removal Facilities-Mechanical Completion	10/3/02		314-LI.48
	• Tank 36H, Waste Removal Facilities-Complete Turnover to Operations	3/4/03		314-LI.49

DRAFT

ATTACHMENT F.2

DWPF DOE BASED MILESTONES

MILESTONE	DATE	AWARD FEE	TDS (AOP)	ADS(FYP)
Complete Electrical Distribution Testing	11/24/92	F.3.1.1.a		
Complete Weld Parametric Study	12/08/92	F.3.1.1.a		
Complete Emergency Diesel Generator Testing	12/03/92	F.3.1.1.a		
Complete Chemical Process O-G Mods	12/92		1.06.07-5(DOE MS)	
Complete H2 Mitigation Mods for CCR	10/92		1.06.07-4(DOE MS)	
Complete DCS Reliability Mods	10/92		1.06.07-3(DOE MS)	
Submit SAR to DOE for approval	11/92		1.06.[illegible](DOE MS)	
Commence DWPF Chemical Runs	11/92		19C[illegible]6.01-1(DOE MS)	SR-22-AA(FYP 94-98
Commence First Melter Run	01/93		19C08	
Complete Melter #2 Assembly	04/93		19C10 (New DOE MS)	
SAR, Rev 2 Update Pkgs to DOE-HQ	04/93		19H04 (New DOE MS)	
Complete Awards for Melter #3 Procurement	09/93		191C12 (New DOE MS)	
Commence Waste Qualification Runs	07/93		19C02/19C11	SR-22-AA(FYP 94-98)
Commence Radioactive Operation	05/94			SR-22-AA(FYP 94-98)
Complete the CDR for Failed Equipment Storage Vaults (3 to 6)	02/92		19C05	
Complete Failed Equipment Storage Vault	03/93		19C09	
Commence Saltstone Continuous Operation	10/92			ADSSR-23-AA
Start construction of Saltstone Vault #2	02/92			ADS SR-23-AA
Complete construction of Saltstone Vault #2	03/94			ADS SR-23-AA

DRAFT

ATTACHMENT F.3.1

SRTC - IWT MILESTONES

DESCRIPTION	COMPLETION DATE	FY93 AOP TDS#	COMMENTS
Demonstrate vertical turbine pump operation	10/1/92	SR-46-AA	On hold per operation's request
Provide corrosion and HLW support	On-going	SR-46-AA	
Submit Tank Farm Operational Safety Requirements for DOE Review	12/31/92	AOP 18C05	
SRTC recommend Safety Class items to WSRC-HLW Prgm	2/18/93	AOP 18C20	
SRTC complete (ready for WSRC review) Chapters 3,5-8,10, and 12-15 of the Tank Farm SAR	9/30/93	AOP 18C21	
Prove mechanical integrity of backup Mott crossflow filter	1/31/93	[illegible]AA	Facility in check-out stages
Provide Technical Manual for ITP Process	6/30/93	SR[illegible]AA	Delayed due to other priorities
Install pilot scale electrochemical denitration test unit	12/1/92	SR-50-AA	Unfunded
Demonstrate feasibility of full scale Cs ion exchange unit	6/1/93	SR-50-AA	Unfunded

DRAFT

ATTACHMENT F.3.2

SRTC - DWPT MILESTONES

DESCRIPTION	COMPLETION DATE	FY93 AOP TDS#	COMMENTS
IDMS VITRIFICATION:		SR-100-AA.47	The IDMS Vitrification Funding shortfall of
Initial qualification of noble metals during vitrification cycle.	09/02/93	SR-100-AA.47	$1,200K will impact the ability to provide CCR
Procure stirred melter.	06/30/93	SR-100-AA.47	support for DWPF startup and complete the
Document HEME Digestion Studies	2/03/92	SR-100-AA.47	schedule of six IDMS runs and melter repair.
Complete initial low nitrate PHA/High Heat Purex sludge demo	12/31/92	SR-100-AA.47	
PHEF VERIFICATION:		SR-100-AA.490	$360K is unfunded, which eliminates repair and modifications to evaluate process alternatives.
Document impact of CO2 as the inertant in the Precipitate Hydrolysis Process.	11/16/92	SR-100-AA.490	Both options impact DWPT's ability to support
Complete initial low nitrite precipitate operations.	11/30/92	SR-100-AA.490	technology development and DWPF startup sched.
Begin optimization of the DWPF Hydrolysis process.	06/30/93	SR-100-AA.490	
ANALYTICAL METHODS & SUPPORT:		SR-100-AA.492	$500K of cost is not funded, which reduces lab equip
Initiate support of DWPF cold chemical runs	11/07/92	SR-100-AA.492	& supplies & puts analytical support at risk.
Implement noble metal analyses for stirred melter	04/15/94	SR-100-AA.492	Associated capital equipment for efficient operations
Initiate program to improve analytical efficiency.	10/01/93	SR-100-AA.492	is not funded. This does not allow shift operation of Lab; instead, backlogs must be handled with more
Dem & Doc all DWPF Analytical Sample Prep & Analytical Methods for Rad Ops.	12/19/92	SR-100-AA.492	overtime, which impacts the turnaround time to DWPF during CCR and continuity of technology development.
PROCESS TECHNOLOGY ASSURANCE:		SR-100.AA.493	This task has $400K unfunded, which puts tech.
Update Precipitate Hydrolysis Technical Bases for Rad Ops.	06/01/93	SR-100-AA.493	issue resolution at risk. Also at risk is the ability to
Document Basis for Technique to clean Fouled SRAT/SME	09/02/93	SR-100-AA.493	address external review groups development
Prepare & Issue Preliminary Tech Basis for HN03 Flowsheet.	08/24/92	SR-100-AA.493	recommendations, such as the identification of
Document Cleaning Technique for Fouled PR.	09/30/92	SR-100-AA.493	organic components for either Late Wash or HAN
Issue Tech Bases for Late Washing	09/30/92	SR-100-AA.493	PHA and the preparation of irradiated precipitate for filtration and hydrolysis testing.
Demonstrate LW PHP in 1/200th Scale SRAT Using Washed Irradiated Feed.	01/31/93	SR-100-AA.493	
Quantify degree of Entrainment to CPC Vessel Vent System.	06/30/93	SR-100-AA.493	
LATE WASH FILTER TEST UNIT:		NDWPT2	Demo unit is needed to assure successful
Install Late Wash Filter Test Unit	10/30/92	NDWPT2	startup and operation of new "Late Wash"
Complete initial performance demonstration runs.	05/30/93	NDWPT2	facilities for DWPF. This is unfunded.
BENZENE ABATEMENT:		SR-100-AA.496	An alternative way to handle the benzene waste
Evaluate detoxifier performance at vendor.	07/15/93	SR-100-AA.496	stream until CIF is operational is required. A
Detoxifier purchase decision.	08/01/93	SR-100-AA.496	detoxifier will be tested at the vendor & if funded, piloted at TNX. Vendor support is not funded.(50K)

DRAFT

SRTC - DWPT MILESTONES (Continued)

DESCRIPTION	COMPLETION DATE	FY93 AOP TDS#	COMMENTS
WASTE FORM QUALIFICATION - WASTE ACCEPTANCE			
Characterize glass samples/QR canisters.	07/31/93	SR-100-AA.42	Provide product acceptance technology & demo. compliance with repository requirements. This task is funded at the Target Level. The supporting analysis task is not full funded.
Revise WQR to include qualification runs data.	07/31/94	SR-100-AA.42	
Complete characterization of qualification runs glass.	02/28/94	SR-100-AA.42	
		SR-100-AA.42	
PRODUCT COMPOSITION CONTROL SYSTEM (PCCS)			
Configure stirred melter control system.	06/01/93	SR-100-AA.495	Accurate sampling, liquid level measurement and statistical process control are imperative for waste compliance. Funding does not include support for Stirred Melter modifications, which would delay full implementation of PCCS on Stirred Melter.
Develop/Demonstrate PCCS for processing with Ion Exchange.	09/01/94	SR-100-AA.495	
Demonstrate PCCS with HWVP/stirred melter.	09/01/94	SR-100-AA.495	
Develop and document Covariance Matrix for Radioactive Operations.	06/09/93	SR-100-AA.495	
		SR-100-AA.495	
Improve Liquidus Model (for PCCS)	04/28/93	SR-100-AA.495	
Verify & Document Solubility of Salt in DWPF Glass for Rad Ops	09/02/93	SR-100-AA.495	
		SR-100-AA.495	
CHEMICAL RUNS SUPPORT			
Complete and Document MFT Homogeneity Study.	1/[illegible]	SR-100-AA.48	Funding has not yet been shifted from 4J, AJ & DA to cover in-resident support.
Provide on-going in-residence support to DWPF.	09/[illegible]	SR-100-AA.48	
Prepare and issue DWPF Feed Specifications for Rad. Operations	?	SR-100-AA.48	
		SR-100-AA.48	
ENGINEERING SUPPORT SERVICES (EES)			
Melter inspection Device ready for baseline inspection.	2/92	LN	EES will provide technical support for DWPF startup requirements. Process equipment troubleshooting and enhancement will be provided.
Complete Canister Lifting Dev ice testing	11/92	LN	
Complete Induction Heating Drying Oven design	12/92	LN	
Complete Analytical Cell Instrumentation	12/92	LN	
Install Code Run Canister Penetration Taps	01/93	LN	
		LN	
Z-AREA SALTSTONE SUPPORT			
Complete review of salt solution parametric study.	1/30/92	4T	
Address PA peer review comments.	12/31/92	4T	
Complete intera modeling on cracks and no slag.	06/30/93	4T	
Determine adiabatic temperature rise for variable solutions.	08/30/93	4T	
		4T	

DRAFT

Appendix G

The following attachments provide a brief description of the open technical issues with significant potential to impact the HLW Plan schedule. In addition to the issue description is a logic tie to the HLW Plan schedule and the projected date at which time the issue must be successfully resolved.

DRAFT

G.1 HLW

G.2 DWPF

Attachment G.1 HLW Technical Issues:

Need Date is based on the current schedule contained in this HLW Plan Rev (0). Changes to the schedule may have a direct impact on the need date of associated issues.

1) Develop sampling protocol for overall Waste Removal Program. Should include Lab Capability to support turnaround time, sample disposition, etc.

Logic Ties	Need Date
a) ITP – Start Salt Removal	12/92
b) ESP – Start of Processing	4/93
c) DWPF - Hg Runs	12/93

2) Resolve/finalize DWPF Chemical Runs stream disposition. Where will the stream go?

Logic Ties	Need Date
a) Start of DWPF Chemical Runs	10/92
b) Start of DWPF Hg Runs	12/93

3) Resolve criticality concerns with ITP and ESP processing.

Logic Ties	Need Date
a) ITP-Start of Salt Removal	12/92
b) ESP-Resume Processing	4/93

4) Develop technology and plan for cooling coil replacement on tank 29.

Logic Tie	Need Date
12 months before scheduled coil replacement	7/95

5) Finalize DWPF feed acceptance criteria

Logic Tie	Need Date
a) DWPF feed – (per ESP Batch)	6/94
b) DWPF recycle – Hg runs	12/93

DRAFT

6) Develop transition plan for turnover of "cleaned" tanks from HLW to ER

Logic Tie	Need Date
Tank 11, 15 & 8 waste removal completion	Start 11/96

7) Define and obtain DOE concurrence on startup review requirements for Waste Removal Projects.

Logic Tie	Need Date
Develop Tank 25 WR Startup Plan	4/93

8) Develop plan for receipt of RBOF stream to Type III tank.

Logic Tie	Need Date
5 years before initiation of Tank 23 waste removal	2/96

9) Complete Tank Farm Safety Analysis Report (SAR) revision.

Logic Tie	Need Date
RHLWE Startup	4/94

10) Define additional Waste Removal requirements for Type IV tanks (resin, sludge heel, etc.)

Logic Tie	Need Date
Tied to removal from first Type IV tank (23)	3/03

11) Resolve Tank 41 Controls Issue.

Logic Tie	Need Date
Return of Tk 41 to salt receipt service	6/94

DRAFT

12) Develop plan for control room consolidation.

Logic Tie	Need Date
Start of Tank 25 salt removal checkout	2/94

13) Resolve tank integrity (benzene deflagration) concerns

Logic Tie	Need Date
ITP - Prior to tank 48 operation	4/93

14) Quantify or predict tank temperature during operation and determine any needed methods to control temperatures

Logic Tie	Need Date
ITP - Prior to tank 48 operation	4/93
ITP - Prior to tank 49 operation	12/94
ESP - Prior to processing	4/[illegible]

DRAFT

15) Evaluate and improve Al Dissolution operation

Logic Tie	Need Date
Prior to Al Dissolution processing	6/96

16) Resolve ITP Seismic (soil bearing) concerns

Logic Tie	Need Date
ITP - Prior to Tank 48 operation	4/93

Attachment G.2 - DWPF

TECHNICAL ISSUES (WSRC SU PLAN, OVERVIEW, P.7)

ISSUE DESCRIPTION	NEED DATE	DRIVER/LOGIC TIE	RESOLUTION
Mitigation of H2 in the feed preparation process	10/93	Need before start of Hg Runs 12/10/93	H2 Mods for CCR 11/26/92 H2 Mods for Hg Runs 12/93
Control of the disposition of Ammonium Nitrate produced in the Precipitate Hydrolysis & feed preparation process	10/93	Need before start of Hg Runs 12/10/93	Scrubber installation
Control of organic deposits in feed preparation.	10/95	Required to support RO 10/95 sludge & precip.	Late Wash flow sheet reduces hi boilers

DRAFT

Appendix H

The following attachments list the key projects to support the overall HLW Plan. They key on the waste removal efforts in HLW and production support in the DWPF. It is not meant to be an all inclusive listing of project activities in these areas. It merely lists those with significant potential impact to the HLW Plan schedule.

The projects included are listed by title, scope and driver relative to the HLW Plan.

H.1 HLW

S-2081	Waste Removal and Extended Sludge Processing
S-2860	Type III Tanks Salt Removal, Phase II
S-3291	Type III Tanks Salt Removal, Phase I
S-3122	New Waste Transfer Facility
S-2821	Diversion Box and Pump Pit Containment Buildings
S-4062	Replacement High Level Waste Evaporator
S-3025	High Level Waste Removal from Filled Waste Tanks
S-2787	Consolidated Incinerator Facility
S-2944	Hazardous Waste/Mixed Waste Disposal Facility
S-3781	In-Tank Precipitation
S-1588	ITP Safety & Environmental Enhancements

DRAFT

H.2 DWPF

S-2045	Interim Glass Waste Storage Building #2
NFP	Failed Equipment Storage Vaults #3-#6
S-4620	DWPF Fire Protection Enhancements
S-3898	New Saltstone Vaults #2
S-3898	New Saltstone Vaults #3-#5

ATTACHMENT H.1

Waste Removal HLW

Project No.	Project Type	Project Title	TEC(K)	Driver	Scope
S-2081	OE	Waste Removal and Extended Sludge Processing	Aprvd: 108,000 Pend: 328,000	1-WR 2-FFA 3-FFCA	Provide facilities to remove high level radioactive waste from 23 underground waste tanks each with a nominal capacity of a million gallons. Included are transfer pumps and transfer jets which will transfer the slurry or salt solution to the newer Type III Tanks for further processing and eventual feed to the Defense Waste Processing Facility (DWPF) or to the Saltstone Facility. Design and installation for conversion of existing instrumentation and control (I&C) for Tanks 1 through 24 and associated peripherals from the old control room to a distributed control system in the new control rooms.

Project No.	Project Type	Project Title	TEC(K)	Driver	Scope
S-2860	OE	Type III Tanks Salt Removal, Phase II	Aprvd: 6,000 Pend: 130,000	1-WR 2-FFCA 3-OPS Support	Provide facilities to dissolve salt contained in two Type III storage tanks and to transfer the solution to the In-Tank Precipitation (ITP) facilities for processing as DWPF feed. In addition, it provides salt removal facilities on tanks 31H and 47F, control systems upgrades to 17 Type III tanks, new control room facilities 241-2H, and the Centralized Support facility 241-4H.

Project No.	Project Type	Project Title	TEC(K)	Driver	Scope
S-3291	OE	Type III Tanks Salt Removal, Phase I	Aprvd: 26,000 Pend: 36,100	1-WR 2-FFCA	Provide facilities to dissolve high level radioactive salt contained in three interim storage tanks and transfer the solution to an ITP facility for processing as feed for the DWPF. Provides expansion to control room building 241-18F to support the process control system being provided by the Level III program.

DRAFT

Project No.	Project Type	Project Title	TEC(K)	Driver	Scope
S-3122 85-D-159	LI	New Waste Transfer Facility	Aprvd: 54,871 Pend: 54,871	1-WR 2-FFCA 3-OPS Support 4-Envir.	Replace an existing obsolete diversion box/pump pit waste transfer facility with one of current design. The facility is designed to transfer waste between the Type III tanks in the east and west H Area waste tank farms and between F and H Areas. This project will include all required transfer piping and equipment, instrumentation and controls and consist of a new diversion box with jumpers and service piping that will provide ten transfer lines to existing facilities and six lines for future long-term waste programs.

Project No.	Project Type	Project Title	TEC(K)	Driver	Scope
S-2821 87-D-181	LI	Diversion Box and Pump Pit Containment Buildings	Aprvd: 24,100 Pend: 24,100	1-Envir. Imp. 2-Imp. in OPS	Provide a metal enclosure building over H-Area diversion box no. 7 (HDB7). Consist of a remotely operated bridge crane capable of accomplishing equipment change operations in the diversion box. It will have a ventilation system to maintain a lower atmospheric pressure. HEPA filters will be used for exhaust. All the equipment required to perform remote operations in the diversion box will be provided by this project. The building and equipment allows all weather, remote and contained work preventing 5 to 6 weeks of lost operation per year.

Project No.	Project Type	Project Title	TEC(K)	Driver	Scope
S-4062 89-D-174	LI	Replacement High Level Waste Evaporator	Aprvd: 75,532 Pend: 109,200	1-Envir. Imp. 2-FFA (Tk 13) 3-FFCA (DWPF)	Provide a cost-effective waste concentration facility necessary to continue waste solidification and other waste management programs at the Savannah River Site (SRS). The high level waste evaporator is capable of producing 7.6 million gallons of products (overhead) each year which can be removed from the waste management complex after final processing through the existing Effluent Treatment Facility (ETF).

DRAFT

Project No.	Project Type	Project Title	TEC(K)	Driver	Scope
S-3025 93-D-187	LI	High Level Waste Removal from Filled Waste Tanks	Aprvd: 96,000 Pend: 104,000	1-WR 2-FFCA 3-OPS Support	Provides permanent and reusable facilities for Type III tanks for use in future waste removal operations which provide feed for ITP and Extended Sludge Processing (ESP) processes prior to being fed to the DWPF. Included are pump support structures, slurry pumps, slurry pump motors, and associated equipment for salt dissolution and sludge suspension; transfer jets for transfer of the dissolved salt solution, caustic system for pH adjustment on Tanks 35H, 36H, and 37H; and equipment storage facility for staging support equipment on this project as well as for use in future tank farm operations.

Project No.	Project Type	Project Title	TEC(K)	Driver	Scope
S-2787 83-D-148	LI	Consolidated Incineration Facility	Aprvd: 99,000 Pend:	1-RCRA 2-FFCA (DWPF)	Provide a facility to incinerate hazardous, low-level radioactive, and mixed waste. The Defense Waste Processing Facility is dependent on the facility to treat its waste benzene stream.

DRAFT

Project No.	Project Type	Project Title	TEC(K)	Driver	Scope
S-2944 89-D-175	LI	Hazardous Waste/Mixed Waste Disposal Facility	Aprvd: 37,500 Pend: 155,000	1-RCRA 2-FFCA	Provide 1) a Resource Conservation Recovery Act (RCRA) - permitted Treatment Building for the stabilization of hazardous and mixed waste (Phase II) and 2) two RCRA-permitted disposal vaults for the disposal of treated waste (Phase I).

Project No.	Project Type	Project Title	TEC(K)	Driver	Scope
S-3781	OE	In-Tank Precipitation/	Aprvd: 55,270 Pend:	1-WR 2-FFA	ITP will provide a process to decontaminate the salt solution. Sodium tetraphenylborate will be used to precipitate cesium. Sodium titanate will be used to absorb strontium and plutonium. The precipitate will be transferred to DWPF for additional processing. This project provides a filter building, a cold chemical area, a control room, and pumps.

Project No.	Project Type	Project Title	TEC(K)	Driver	Scope
S-1588	OE	ITP Safety and Environmental Enhancements	Aprvd: 37,190 Pend: 37,190	1-WR 2-FFA	Project provides fire water suppression system, liquid nitrogen storage and unloading system, benzene stripper, laboratory, and other miscellaneous equipment necessary for the safe operation of ITP and protection of the environment.

DRAFT

ATTACHMENT H.2

DWPF PROJECTS

Projects No.	Project Type	Project Title	TEC	Driver	Scope
S-2045		Interim Glass Waste Storage Bldg #2		DOE Orders 5820.2A 6430,1A 5480.11 SCDHEC Permit # 16,783	GWSB #2 is scheduled as an FY95 line item . If deferred until FY96,the construction completion milestone will be delayed until 12/30/2000. Canister production would cease until commisioning is completed in mid 2001.
NFP	LI 3.10.2.2 (FYP)	DWPF 703 Admin. Building		DOE/IG-0279 Office trailers are not cost effective.	Bldg. 703 will provide permanent administrative office space for 250 people.
NFP	LI 3.10.2.2 (FYP)	Failed Equip. Storage Vaults #3-#6		DOE Orders 5820.2A 5480.11	FY95 are proposed as FY95 line item to provide four additional storage vaults to store failed melters and/or other failed equipment that contain high level radioactive contamination. By mid FY97, two melters will have been used and a third vault will be needed for storage.
NFP	LI 3.10.2.2 (FYP)	Salt Cell Benzene Abatement		EPA NESHAP	Due to the promulgation of the new Clean Air Act regulations, 95-99% of the benzene must be removed from the Salt Cell Vent Condenser Off-Gas Stream.
S-4620		DWPF Fire Protection Enhanments			
S-3898		New Saltstone Vault #2			
S-3898		New Saltstone Vaults #3-#5			

*NFP (New Facility Plan)

DRAFT

Appendix I

Appendix I is a table depicting the FY93 AOP Budget (without reprogramming) and the planning budget from the FY94 Five Year Plan. It represents that portion of the EM-30 Budget related to the HLW waste removal activities through operation of the DWPF and Saltstone.

DRAFT

BC 1051

APPENDIX I

DWPF System Budget

(Thousands of Dollars)

		FY93	FY94 FYP Planning Case					
	DWPF	AOP	FY94	FY95	FY96	FY97	FY98	Total
21-AA	Program Mgmt	10,020	5,963	9,186	9,589	9,909	10,237	54,904
22-AA	Vitrification	167,408	174,083	177,051	172,743	182,442	180,623	1,054,350
23-AA	Saltstone	10,172	17,768	23,011	23,744	24,922	25,378	124,995
24-GP	GPP	5,950	1,961	2,000	2,000	2,000	2,000	15,911
25-LI	New Fac Plng	50	155	9,120	29,550	17,640	25,010	81,525
26-LI	81-T-105 (DWPF)	32,600	29,873					62,473
	Subtotal DWPF	**226,200**	**229,803**	**230,[illegible]**	**237,626**	**236,913**	**243,248**	**1,394,158**
	Liquid							
32-AA	H Tank Farm		599	1,268	2,274	3,374	4,040	11,555
33-AA	F Tank Farm		1,566	2,897	4,329	3,954	4,648	17,394
34-AA	ITP	58,414	44,035	47,628	50,321	56,009	58,035	314,442
39-LI	NWTF	7,228	1,961					9,189
310-LI	Repl HLW Evap	16,830	30,386	12,020	4,939	548	564	65,287
314-LI	HLW Removal	28,631	54,138	88,034	59,543	51,917	40,777	323,040
	Subtotal Liquid	**111,103**	**132,685**	**151,847**	**121,406**	**115,802**	**108,064**	**740,907**
	TOTAL	337,303	362,488	372,215	359,032	352,715	351,312	2,135,065

DRAFT

Programmatic assumptions used to develop the budget for this chart assume DWPF radioactive operations in 6/1/94. It is also assumed that the Glass Waste Storage Building #2 will be required as an FY95 Line Item (8/95 authorization) for 50% attainment, an FY96 Line Item (4/96 authorization) for 35% attainment or an FY97 Line Item (10/96 authorization) for 25% attainment. Above funding does not contain provision for Late Wash.

WESTINGHOUSE SAVANNAH RIVER COMPANY
FAX TRANSMISSION

UNCLASSIFIED FACSIMILE TRANSMITTAL
FAX NUMBER: (803) 557-0527
FAX LOCATION: 742-6G, Room 9

FROM THE OFFICES OF
WASTE MANAGEMENT'S
REGULATORY COMPLIANCE

DATE: 11/3/92 TIME: 4 pm

▶ To: Chuck Hayes

▶ Location: 703-18A

▶ Telephone: 58838

▶ From: Matt Hunter

▶ Location: 742-6G

▶ Telephone: 70520

Total Number of Pages_____(Including Cover Sheet)

DON'T SAY IT - WRITE IT

TO: _____ LOCATION: _____ DATE: 11/3/92

FROM: Matt Hunter PHONE: 7-0520 LOCATION: 742-6G

Please find attached a draft copy of the letter to DHEC making an official notification of the inconsistency in the Tank Assessment. Please review and provide comments to myself or Roger Roosa by 11/6/92. Thank you.

Preventative Safety - Prevents Injuries

OSR 3-4A-W (Rev 1-89)

WESTINGHOUSE SAVANNAH RIVER COMPANY

INTER-OFFICE MEMORANDUM

WER-HLE-921xxx

November 3, 1992

To: W. D. Dunaway, 703-18A

From: K. S. Wierzbicki, 742-6G

DRAFT

INCONSISTENCIES IN THE PHASE II TANK ASSESSMENT REPORT FOR THE F AND H-AREA HIGH LEVEL RADIOACTIVE WASTE TANK FARMS (U)

Please find attached a draft copy of the transmittal letter to the South Carolina Department of Health and Environmental Control. This letter is formal notification of an inconsistency between the Phase II Tank Assessment Report and the current existing conditions in the tank farms. This letter has been approved by both Waste Management and the Department of Energy.

Attachment

Westinghouse
Savannah River Company

P.O. Box 616
Aiken SC 29802

ESH-FSS-92-DRAFT

November 3, 1992

Mr. L. E. Arrington, Engineer
Industrial and Agricultural Wastewater Division
South Carolina Department of Health
and Environmental Control
2600 Bull Street
Columbia, South Carolina 29201

DRAFT

Dear Mr. Arrington:

INCONSISTENCIES IN THE PHASE II TANK ASSESSMENT REPORT
FOR THE F AND H-AREA HIGH LEVEL RADIOACTIVE WASTE TANK FARMS (U)

Ref.: Telephone Conversation, C. R. Hayes to L. E. Arrington, 10/13/92

As discussed in the referenced telephone conversation, during research and review for a recent project, an inconsistency between the Phase II Tank Assessment Report and the current existing conditions in the tank farms was identified. Since that time, six transfer lines have been recognized as not possessing adequate leak detection, as required by the standards found in the draft Federal Facility Agreement. Specifically, the lines identified are:

H Diversion Box 5 to Tank 21 (Line 102E)
H Diversion Box 5 to Tank 22 (Line 103E)
H Diversion Box 5 to Tank 23 (Line 101E)
H Diversion Box 5 to Tank 24 (Line 1825)
Tank 13 to Tank 14 (Line 21E)
Tank 13 to Tank 16 (Line 20E)

These lines will be handled in two ways. Since three of these lines (Lines 1825, 21E and 20E) are ancillary equipment for tank systems that will be removed from service in accordance with the FFA, these lines will be decommissioned with the associated tank systems. The remaining transfer lines (Lines 101E, 102E and 103E) will require modification to remain protective of the environment. An assessment will be performed on the basis of the FFA secondary containment criteria, cost and exposure to individuals, to determine the scope and priority of the modification. This assessment will be made prior to use and modifications will be begun as soon as possible.

During the interim period, steps can be taken to determine if there has been a leak in the primary containment. Two of these lines (Lines 102E and 103E) have an access port that can be checked for the presence of liquid and contamination. This interim action will be taken at least once every twenty-four hours during a transfer through these lines.

As the improvements to these lines progress, periodic updates of work completed will be forwarded to you.

As discussed at the August 13, 1992 meeting, SRS committed to advise SCDHEC of the revised "need date" for the Wastewater Construction permit. To allow SRS time to adequately address and implement any permit Special Conditions prior to a Department of Energy Operational Readiness Review for the In-Tank Precipitation facility, SRS requests SCDHEC to issue the F/H Tank Farm Wastewater Construction Permit by December 15, 1992.

Yours very truly,

DRAFT

W. D. Dunaway, Manager
Permitting Field Support Group
Environmental Protection Department

Attachment

CC: M. C. Reece, SCDHEC, Lower Savannah District
C. Richardson, SCDHEC, Columbia

BCC:

C. E. Anderson, 703-H
C. Blair-McManus, 703-H
J. E. Bolen, 703-41A
S. S. Cathey, 703-H
J. W. Cook, 742-A
L. S. Coward, 703-18A
P. D. d'Entremont, 703-H
H. L. Davis, 703-41A
E. Ennis, 241-120H
T. P. Gaughan, 241-152H
A. R. Gough, 922-3W
M. Hawkins, 742-A
C. R. Hayes, 703-18A
M. A Hunter, 742-6G
B. L. Lewis, 703-H
T. M. Monahon, 703-H
J. V. Odum, 742-A
M. S. Peters, 703-F
R. L. Peterson, 703-41A
J. S. Roberts, 742-A
R. K. Roosa, 703-H
R. M. Satterfield, 719-4A
G. F. Stejskal, 742-A
C. B. Stevens, 742-6G
W. L. Stubbs, 703-H
K. S. Wierzbicki, 742-6G
K. Z. Wolf, 704-15S
G. T. Wright, 703-H
Records Administration, 773-52A
EPD Fileroom, 742-A

INTER-OFFICE MEMORANDUM
Savannah River Site

Date: 29-Oct-1992 02:51pm EST
From: Matthew A. Hunter
HUNTER-MA-L2335 AT A1 AT SASRS2
Dept: WMRC
Tel No: 70520

TO: See Below

Subject: Additional Transfer Line Research

Here's the final outcome of Phillip Norris's research into the additional transfer lines that Robert Wilson brought up at the meeting on the first six lines. Do you think our pathforward for these lines is sufficient to please DHEC?

Distribution:

TO:	Chuck Hayes	(HAYES-CR-Z9722 @A1@SLSRP1)
CC:	Phillip W. Norris	(NORRIS-PW-L0900 AT A1 AT SASRS2)
CC:	Brenda L. Lewis	(LEWIS-BL-O6503 AT A1 AT SASRS2)
CC:	Roger K. Roosa	(ROOSA-RK-L4532 AT A1 AT SASRS2)
CC:	CARY B. STEVENS	(STEVENS-CB-O5981 AT A1 AT SASRS2)
C:	Kim S. Wierzbicki	(WIERZBICKI-KS-O6535 AT A1 AT SASRS2)

2

INTER-OFFICE MEMORANDUM
Savannah River Site

Date: 28-Oct-1992 02:22pm EST
From: Phillip W. Norris
NORRIS-PW-L0900 AT A1 AT SASRS2
Dept: WMT
Tel No: 7-1795 bp# 5133

TO: See Below

Subject: Waste Transfer Lines

In a recent meeting discussing the leak detection capabilities of the Type IV Waste Tanks transfer lines in H Area, Robert Wilson posed the question of whether or not the transfer line from DB4 to DB5 and Tanks 9 and 10 to DB1 has leak detection. After prints were reviewed the following information was found:

DB4 to DB5 - The two transfer lines from DB4 to DB2 and the line from DB4 to DB5 exit DB4 in a common 10" jacket. Around DB3 a transition piece on this jacket exists in which the DB5 to DB4 line branches off this common jacket. However, the jacket of DB5 to DB4 remains intact with the jacket running down to DB2. The low point of the jacket is at DB2 and it drains to a Modified Leak Detection Box (MLDB) which alarms in the 242-H control room. Even though the DB5 to DB4 line has leak detection, it is not pressure testable according to the prints. The transition piece can be found on detail print D139081F and the associated MLDB can be found on print W717074.

Tanks 9 and 10 to DB1 - Before waste removal begins for Tank 9 and 10, project 2081 will install a valve box which will allow the separation of Tanks 9 and 10 waste transfer line to DB1. The design had previously been completed for the valve box and the prints were revised to show the valve box. Before this valve box is installed, a design change will have to be made in order to supply leak detection for the Tank 9 transfer line. Also, the project will possibly have to make both of these line capable of pressure testing. However, currently the waste transfer lines from Tank 9 and Tank 10 to DB1 combine to form a common line into DB1. From all indications of previous revisions of the prints, these lines share a common jacket where they come together. Therefore, they also share leak detection by using an MLDB which is located near tank 10 and ties into the Tank 10 waste transfer line. This MLDB is supplied with a conductivity probe which alarms in the 242-H control room. Associated prints to these lines are W718949, W706533 rev. 46, and S5-2-3462.

If you have any questions, please let me know.

Distribution:

TO:	Matthew A. Hunter	(HUNTER-MA-L2335 AT A1 AT SASRS2)
CC:	Robert W. Watkins	(WATKINS-RW-L2070 AT A1 AT SASRS2)
CC:	Todd A. Grzech	(GRZECH-TA-W9618 AT A1 AT SASRS2)
CC:	Mark P. Reimnitz	(REIMNITZ-MP-Y5989 AT A1 AT SASRS2)
CC:	Mike Rea	(REA-MJ-O8913 AT A1 AT SASRS2)
CC:	PAUL D. D'ENTREMONT	(D'ENTREMONT-PD-O5438 AT A1 AT SASRS2)

INTER-OFFICE MEMORANDUM
Savannah River Site

Date: 27-Oct-1992 12:48pm EDT
From: Surendra K. Gupta
GUPTA-SK-L0395 AT A1 AT SASRS2
Dept: DE-WM
Tel No: x7-8714

TO: Chuck Hayes (HAYES-CR-Z9722 @A1@SLSRP1)

CC: Robert M. Prather (PRATHER-RM-O6786 @A1@SRXSS2)
CC: John R. Thatcher (THATCHER-JR-L0985 AT A1 AT SASRS2)
CC: Peter J. Rice (RICE-PJ-O8829 AT A1 AT SASRS2)
CC: Antonio G. Machado (MACHADO-AG-Y6506 @A1@SLSRP1)

Subject: WASTEWATER PERMIT FOR NEW PIPE FROM HDB8 TO HDB6(U)

On Project S-3122 a new drawing is being issued to show HDB8 to HDB6 transfer line tie-in modifications. This drawing was not included originally in the permit package. However the scope of transfer lines was included in Industrial Waste Treatment System permit Package.

Please provide response to the following questions:

1.Do we need to resubmit permit to show the subject modifications.! — No
2.Do we need to stamp the drawing prior to issue for construction.! — No
3.Can we stamp the drawing after the as-builts are done.! — YES
4.DO we need to show the permit no. on the drawing prior to issue or after as-builts are completed.! — NOT NEC.

Your response to the above questions is highly appreciated.

Thanks

INTER-OFFICE MEMORANDUM
Savannah River Site

Date: 26-Oct-1992 10:25am EDT
From: PAUL D. D'ENTREMONT
D'ENTREMONT-PD-O5438 AT A1 AT SASRS2
Dept: WMT
Tel No: 78727

TO: See Below

Subject: RE: Transfer Line Meeting Minutes

Your memo implies that two of the lines under discussion have smear pipes. In my opinion, a properly designed smear pipe is an acceptable method of leak detection under the FFA as long as we take smears every 24 hours while a transfer is in progress (In practice, we'd probably want to do it once per shift to ensure that it happened at least once every 24 hours).

I just wanted to offer this as a suggestion. Obviously, providing leak detection boxes and conductivity probes is a better long-term solution, and perhaps you discussed this in your meeting. The advantage of using the smear pipes would be that this fix could be implemented very quickly. However, using the smear pipes would be more burdensome on Operations.

Distribution:

TO:	Matthew A. Hunter	(HUNTER-MA-L2335 AT A1 AT SASRS2)
CC:	Brenda L. Lewis	(LEWIS-BL-O6503 AT A1 AT SASRS2)
CC:	Chuck Hayes	(HAYES-CR-Z9722 @A1@SLSRP1)
CC:	W.C. Clark	(CLARK-WC-O6888 AT A1 AT SASRS2)
CC:	David F. White	(WHITE-DF-T7890 AT A1 AT SASRS2)
CC:	Mark P. Reimnitz	(REIMNITZ-MP-Y5989 AT A1 AT SASRS2)
CC:	Mark J. Mahoney	(MAHONEY-MJ-O5457 AT A1 AT SASRS2)
CC:	Mario A. Ceravolo, 703-H	(CERAVOLO-MA-O7495 AT A1 AT SASRS2)
CC:	Karen F. Lesko	(LESKO-KF-O7041 AT A1 AT SASRS2)
CC:	Robert W. Wilson	(WILSON-RW-T4847 AT A1 AT SASRS2)
CC:	CARY B. STEVENS	(STEVENS-CB-O5981 AT A1 AT SASRS2)
CC:	Phillip W. Norris	(NORRIS-PW-L0900 AT A1 AT SASRS2)
CC:	Rod M. Satterfield	(SATTERFIELD-RM-T3212 @A1@SLSRP1)
CC:	Ginny Ellis	(ELLIS-VE-W0928 AT A1 AT SASRS2)
CC:	TOM MONAHON	(MONAHON-TM-O4411 @A1@SRXSS2)
CC:	Dot Matthews	(MATTHEWS-DL-W0643 AT A1 AT SASRS2)
CC:	Kim S. Wierzbicki	(WIERZBICKI-KS-O6535 AT A1 AT SASRS2)
CC:	Roger K. Roosa	(ROOSA-RK-L4532 AT A1 AT SASRS2)
C:	Mike Rea	(REA-MJ-O8913 AT A1 AT SASRS2)

WD-0517

Westinghouse
Savannah River Company

P.O. Box 616
Aiken, SC 29802

ESH-FSS-92-0764

October 26, 1992

Mr. L. E. Arrington, Engineer
Industrial and Agricultural Wastewater Division
South Carolina Department of Health
and Environmental Control
2600 Bull Street
Columbia, South Carolina 29201

Dear Mr. Arrington:

SRS RESPONSE TO SCDHEC / EPA REVIEW COMMENTS ON F/H AREA HIGH LEVEL RADIOACTIVE WASTE TANK FARM ASSESSMENT REPORTS (U)

Ref: Letter, L. E. Arrington to J. V. Odum, 7/7/92

Please find enclosed the SRS response package to the subject review comments. Each comment has been addressed and in some cases has been combined with other similar comments. As discussed previously with DHEC, the SRS is responding to the comments by providing additional information and not by amending the assessment reports.

Responses to the concerns expressed in the referenced cover letter have also been incorporated into the package. DHEC concern over inspection of the entire tank wall is responded to in Comment 73 (page 76). The issues involving Tank 13 are addressed in Comment 75 (page 78). Comment 76 (pages 79 and 80) addresses the future use of Tanks 2 through 8. There were also two concerns expressed in the introduction to the comments on the Phase II Assessment involving waste removal and contingency plans. These concerns are addressed in Comments 77 and 78, respectively.

As a result of conversation between yourself and Mr. C. R. Hayes, a presentation on the waste removal schedule will be provided for your information in the near future. Currently, the schedule is under WSRC / DOE evaluation.

The SRS appreciates your assistance in this matter. Please contact C. R. Hayes (725-8838) if there are any questions.

Yours very truly,

W D Dunaway

W. D. Dunaway, Manager
Permitting Field Support Group
Environmental Protection Department

CRH:pr
Attachment

CC: M. C. Reece, SCDHEC, Lower Savannah District
C. Richardson, SCDHEC, Columbia
A. B. Gould, 703-41A (2) Concur *
* w/one attachment

BCC:

C. E. Anderson, 703-H
C. Blair-McManus, 703-H
J. E. Bolen, 703-41A
S. S. Cathey, 703-H
J. W. Cook, 742-A
L. S. Coward, 703-18A *
P. D. D'Entremont, 703-H
H. L. Davis, 703-41A
W. D. Dunaway, 703-18A
T. P. Gaughan, 241-120-H
A. R. Gough, 992-3W
M. Hawkins, 742-A
C. R. Hayes, 703-18A
M. A. Hunter, 742-6G
B. L. Lewis, 703-H
T. M. Monahon, 703-H
J. V. Odum, 742-A
R. L. Peterson, 703-41A
J. S. Roberts, 742-A
R. Roosa, 703-H
R. M. Satterfield, 719-4A
G. F. Stejskal, 742-A
C. B. Stevens, 742-6G
W. L. Stubbs, 703-H
K. S. Wierzbicki, 742-6G
K. Z. Wolf, 704-15S
G. T. Wright, 703-H
Records Administration, 773-52A *
EPD Fileroom, 742-A

* w/attachment

Comment #1

Describe the operating practices and management procedures that are used to ensure that the internal cooling systems and annulus vent systems are in proper working condition at all times. For example, describe the controls, alarms, monitoring, inspection and maintenance procedures that are employed for the various scenarios during normal operations and potential problem scenarios. Also discuss the equipment and procedures used to detect malfunctions in the cooling system, as well as leaks in the tank systems where the cooling systems may be capable of detecting such problems.

Phase	Section	Subject
I	*3.1.2*	*TANKS 48 AND 49*
II	*3.1.1*	*TYPE I WASTE TANKS*
II	*3.1.2*	*TYPE I WASTE TANKS*
II	*3.2.2*	*TYPE II WASTE TANKS*
II	*3.3.2*	*TYPE III/IIIA WASTE TANKS*

Response

It should be recognized that the loss of either the internal cooling system or annulus ventilation systems does not pose any immediate threats to the tank integrity or environment. Due to the volume of the waste tanks, personnel are provided with adequate time to repair any cooling system deficiencies that occur before waste temperatures could pose a problem.

Cooling Coils

SRS personnel conduct field walkdowns each day to inspect and record essential process parameters in the waste tank farms. For the tank internal cooling system (i.e., pumphouse and cooling coils), parameters such as cooling water pressures, flow, and inlet and outlet temperatures are recorded. If any of the parameters are outside of set operating limits, the item is identified for the review of process supervision or if instructed by the procedures, an action is taken to correct the situation. The control rooms in the tank farms are manned continuously and equipped with various alarms associated with the internal cooling coil system such as coolant pump failure and expansion tank hi/lo level (i.e., head pressure tank). If an alarm is received, it is acknowledged and the proceduralized steps are taken to respond to the alarm and provide appropriate systems maintenance.

Annulus System

The primary purpose of the annulus systems is not to provide waste tank cooling but to more importantly ensure leak sites are maintained dry to minimize the potential for release to the environment. However, it can provide supplemental cooling to the steel walls and bottom of the tanks. The daily field walkdown is used to inspect and record various parameters from the tank ventilations systems. Tank-to-annulus vacuum as well as annulus outlet temperature is recorded daily. Alarms for the annulus ventilation, such as annulus blower failure, is also supplied in the control room. Alarms and items outside of operating limits are responded to the same as discussed in the cooling coils section. Preventive maintenance also exists which prompt personnel to upkeep the system equipment and instruments as appropriate.

Comment # 2

Although the annulus vent systems have HEPA filters and condensate traps, demonstrate that they will not result in airborne releases from the secondary containment system if a large leak occurs from the primary system.

Phase	Section	Subject
I	*3.1.2*	*TANKS 48 AND 49*
II	*3.1.1*	*TYPE I WASTE TANKS*
II	*3.1.2*	*TYPE I WASTE TANKS*
II	*3.2.2*	*TYPE II WASTE TANKS*
II	*3.3.2*	*TYPE III/IIIA WASTE TANKS*

Response

The amount of waste that would become airborne, even in the event of a large leak, is quite small because nearly all of the contaminants of the waste are non-volatile with the exception of tritium. Of the waste constituents, only water vapor becomes airborne to an appreciable extent.

Experience has shown that HEPA filters installed in the annulus vent systems (page 300 and 344 of the Permit Application package) are effective at preventing the release of small amounts of waste that become airborne. For example, in the Tank 16 incident, the annulus was filled with waste to five feet, i.e. the amount of liquid exposed to the ventilation air was equal to the full cross sectional area of the annulus, yet the HEPA filter system that was installed after the incident was effective at preventing airborne contamination (See Comment 15 for more details). Even in the event of a catastrophic leak, the surface area of the liquid would not be greater than that of the Tank 16 incident.

All tanks that have leaked, have had HEPA filters installed on their annulus ventilation. All of the ventilation systems for the Type I, II and III tanks can be fit with a HEPA filter.

Comment #3

Discuss the history of any cooling system (cooling coils and annulus ventilation) failures, the consequences of a failure, and any actions that need to be taken if the annulus cooling system becomes inoperative due to a large leak (e.g., liquid fills the annulus vent duct slots and/or the bottom air flow slots).

Phase	Section	Subject
I	*3.1.2*	*TANKS 48 AND 49*
II	*3.1.1*	*TYPE I WASTE TANKS*
II	*3.1.2*	*TYPE I WASTE TANKS*
II	*3.2.2*	*TYPE II WASTE TANKS*
II	*3.3.2*	*TYPE III/IIIA WASTE TANKS*

Response

Again, it should be recognized that the loss of either the internal cooling system or annulus ventilation system does not pose any immediate threats. Due to the volume of the waste tanks, personnel are provided with adequate time to repair any cooling deficiencies that occur before an increase in waste temperatures could pose a problem.

Cooling Coils

Over the years, several waste tank cooling coils have failed. When this occurs, the individual cooling coil is taken out of service by permanent isolation. At the present, the remaining cooling coils that are in service provide sufficient cooling for the current contents of the tanks and anticipated future operations. Therefore, the effect of these cooling coil failures, if any, is minimal. Cooling coils are regularly tested, the failures are documented and then those coils are taken out of service.

Annulus System

The annulus ventilation system, as mentioned in Comment #1, is not a primary source for cooling of the waste tank. Therefore, if a large leak did occur and filled the annulus vent slots, the annulus ventilation system could be turned off until the waste could be removed from the annulus.

Comment #4

Provide more detail on the monitoring of the nitrogen blanket which is maintained in tanks where the potential for explosive gas formation exists, specifically, how the blanket integrity is monitored and maintained.

Phase	Section	Subject
I	*3.1.2*	*TANKS 48 AND 49*
I	*3.2.2*	*ITP FILTRATE HOLD TANKS*

Response

The vapor space in Tanks 48 and 49 is maintained under a slight negative pressure by use of blowers. Nitrogen is introduced into the vapor space continuously and the exhaust of the blower is analyzed continuously for combustible material. The exit gas is always maintained below a fraction of the lower flammability limit (LFL). If the analyzer indicates that the mixture is nearing the LFL limit, nitrogen flow is increased.

In the case of the ITP Filtrate Hold Tanks, a positive pressure is maintained in the vapor space. As the tank "breathes" in operation, nitrogen is taken in and expelled through pressure relief valves and nitrogen supply valves. The atmosphere in the tank vapor spaces is monitored continuously for oxygen content.

SRS personnel also perform daily surveillances on these system to ensure their proper operation and to record the combustible material concentrations.

Comment #5

The report discusses the importance of maintaining the chemistry of the waste and other parameters within certain bounds to prevent stress corrosion cracking (SCC) of the tank shells. However, the specific ranges or limits for pH, nitrate, temperature, tank shell stress, etc. that are needed to prevent SCC have not been provided. Therefore, describe the concentrations of the various constituents that must be maintained in the tanks, including allowable temperatures and stresses. Provide details regarding the important interdependencies among the various parameters (i.e., as the level of each parameter changes, describe how the others are affected and/or how they must be modified to prevent further SCC. Also discuss the specific procedures and equipment used to monitor each parameter and maintain the proper concentrations/levels of all parameters, from initial receipt of the waste in the tanks through its final removal.

Phase	Section	Subject
I	*3.1.2*	*TANKS 48 AND 49*
II	*3.1.2*	*TYPE I WASTE TANKS-SC*
II	*3.2.2*	*TYPE II WASTE TANKS-SC*
II	*3.3.2*	*TYPE III/IIIA WASTE TANKS-SC*
II	*3.4.2*	*TYPE IV WASTE TANKS-SC*
II	*4.1.2*	*TYPE I WASTE TANKS-PC*
II	*4.2.2*	*TYPE II WASTE TANKS-PC*
II	*4.4.2*	*TYPE IV WASTE TANKS-PC*

Response

The current operational limits, including temperature and various chemical constituents of concern, are provided in the Wastewater Permit Application on page 339-341 and in the Phase II Tank Assessment Report in Attachment C.

Current procedures require any waste sent to the tank farm to meet minimum pH requirements, as well as several other technical parameters. In addition, current procedures require periodic supernate sampling of all waste tanks. The supernate sampling frequency is currently no greater than two years for any tank with supernate that can be sampled. More frequent samples are made when either process knowledge indicates concentrations may be close to the limits or desire to control the chemical composition close to the minimum limits. Sample results are compared to previous results in order to identify any potential variations from expected values and monitor when inhibitor additions are needed. When additional inhibitors are determined to be needed, they are added to waste tanks by discharging chemicals from a chemical tanker truck directly to the tank.

Waste tank temperatures are continuously monitored by multiple thermocouples as described in the Wastewater Permit Application, pages 302, 310, 344-346, and 360.

The administrative controls and operational limits are part of an extensive corrosion prevention program. As part of the program, the operational limits are reviewed regularly against changes in process, variations in chemistry, and new developments from research on site and off site. These activities are all considered normal operations and are revised as needed.

Comment #6

Provide vendor information to show that the epoxy coating is compatible with the anticipated ranges of constituents, pH, radiation levels and other characteristics of the waste to be contained.

Phase	Section	Subject
I	*3.2.2*	*ITP FILTRATE HOLD TANKS*

Response

The vendor information for the coating used for this application is included in Attachment 1.

Comment #7

Discuss whether or not and provide details on the potential for leaks to escape through the ventilations systems to the environment.

Phase	Section	Subject
I	*3.3.1.1*	*ITP CROSS-FLOW FILTERS*
I	*3.3.2.2*	*STRIPPER COLUMNS*

Response

FILTERS

The ventilation duct is 1'6" above the floor of the filter cell. The volume of the space in the filter cell below this duct is about 3000 gallons. At the maximum filter flow rate (500 gpm) it would take about 6 minutes for the liquid in the cell to rise to the level of the ventilation duct. Normal operations will be at a flow rate considerably below the maximum. There are liquid detection devices in the cell sump that cause an alarm to sound in the control room in time to react to the situation and shutdown the process before the liquid reaches the duct. Thus, it is very unlikely that the bulk liquid would escape from the cell through this route.

If spray were to be carried into the duct, it would be dried by in-line heaters and the remaining dry salts would be filtered out by the HEPA filters in the ventilation system.

COLUMNS

Each of the stripper columns is equipped with high and high-high alarms that alert the operators if the liquid level rises above the desired range. In addition, there is an interlock that activates when the alarms sound and isolates the incoming filtrate to ensure that no further liquid enters the column. If small amounts of liquid were to be carried over with the gas stream, they would be removed by an in-line mist eliminator. Further protection is provided downstream by a heater to evaporate the liquid and a HEPA filter to trap entrained salt particles.

Finally, both systems exit through dedicated process stacks that are equipped with an isokinetic sampler for monitoring of the discharged gases.

Comment #8

Discuss the presence of salt cake in the containment pan and on the tank side, and any potential corrosion or cracking. Discuss how the visual inspection can "see through" the salt cake and provide enough evidence to ensure that corrosion or cracking is not occurring as a result of the leaked waste.

Phase	Section	Subject
II	*3.1.2*	*TYPE I WASTE TANKS*
II	*3.2.2*	*TYPE II WASTE TANKS*

Response

SRS has investigated corrosion potential of waste in tank annuli since waste was first discovered in them. The chemical composition of waste samples taken from the annulus mirrors that of the soluble waste in the waste tank except for the free hydroxide concentration. Hydroxide in the waste reacts with carbon dioxide in the vapor to form carbonates. Adequate inhibitor levels, primarily nitrite ion concentrations, exist in the waste to prevent corrosion. Samples have been analyzed as recently as April 1992.

The photographic inspection techniques employed do not "see through" the waste. When a crack forms on the side of the tank below the supernate level, waste can seep through the crack, but quickly crystallizes in the relatively dry annulus atmosphere. The crystals plug the crack and prevent further leakage. The photographic inspection "sees" the crystal formation on the side of the tank or any waste on the bottom of the annulus. Subsequent photographs are compared to the earlier photographs for changes. Any change is investigated for the cause.

Comment #9

This section states that "The sodium hydroxide that is added to the wastes to inhibit nitrate induced SCC, also seems to facilitate compatibility with the cement-asbestos jacket." Explain how this occurs if the waste has never come into contact with the cement-asbestos (as indicated in Subsection 3.7.3.5 Past Leaks).

Phase	Section	Subject
II	*3.7.3.2*	*TYPE III/IIIA TRANSFER LINES*

Response

The statement in the Assessment was not intended to imply that any leakage has occurred in these piping systems. Note, the cement is attacked by acid solutions especially in the presence of sulfate ions. The increase in alkalinity caused by the NaOH addition would, therefore, be protective under these conditions as is indicated.

The cement/asbestos pipe was evaluated for use in this application before being installed in the systems. Cement/asbestos is known to be resistant to alkaline materials. For example, the NACE Corrosion Data Survey, Non-metals Section approves the use of concrete (cement plus sand, gravel and water forms concrete) in contact with 10-90% NaOH solutions at temperatures from 70 to 90° F. The asbestos is added to the pipe for mechanical properties improvement. Asbestos is also resistant to caustic attack. The same reference permits the use of asbestos in contact with nitrate solutions under similar conditions of concentration and temperature.

Comment #10

Demonstrate that all leak sites will be identified for these tanks before using them to receive low level radioactive process wastewaters, and that the tanks will not be filled above their lowest leak sites. The demonstration should include a method of determining where the lowest leak sites may be given that 100% of the tank wall cannot be viewed by current techniques.

Phase	Section	Subject
II	*4.4.2*	*TYPE IV WASTE TANKS*

Response

Above the liquid surface, the tank wall is photographically inspected for cracks each year. The wall below the liquid surface is not photographically inspected; however, liquid removed from the tank bottom (and sidewall in H-Area) leak detection sumps is analyzed for radioactivity. A leak site below the liquid surface would result in an activity increase in liquid removed from the bottom (and/or sidewall in H-Area) leak detection sumps.

The liquid level operating limit in Tank 20, the only Type IV tank with anomalous spots, is administratively controlled and maintained below these spots.

Comment # 11

Demonstrate that the containment system and/or tanks have adequate support against failure due to inadequate bearing capacity, excessive settlement or compression, especially when it (or the contained tank) is full of waste. Also, discuss why this tank system (Tanks 48 & 49) base appears less substantial than the one constructed for the smaller hold tank system.

Phase	Section	Subject
I	*3.1.3*	*TANKS 48 AND 49*
II	*3.1.3*	*TYPE I WASTE TANKS - SC*
II	*3.2.3*	*TYPE II WASTE TANKS - SC*
II	*3.3.3*	*TYPE III/IIIA WASTE TANKS - SC*
II	*3.4.3*	*TYPE IV WASTE TANKS - SC*
II	*3.5.3*	*EVAPORATORS - SC*
II	*3.6.3*	*PUMP PITS*
II	*4.1.1*	*TYPE I WASTE TANKS - PC*
II	*4.2.1*	*TYPE II WASTE TANKS - PC*
II	*4.4.1*	*TYPE IV WASTE TANKS - PC*
II	*4.5.1*	*EVAPORATORS - PC*

Response

The tanks and containment systems were designed and constructed to nationally recognized standards, which include provisions to ensure adequate bearing capacity and resistance to settlement and compression. These standards were listed in the permit application. A listing of the tank system and a reference to where they appear in the application is shown below:

Tank Type	Permit Reference (Page #)
I	284 - 295
II	306 - 308
III/IIIA	313 - 338
IV	350 - 357
Evaporators	240 - 274
Pump Pits	386 - 388

SRS currently has a program in place to verify that all modifications that will be made to the tanks will not compromise the tank's integrity and that all seismic loading criteria are met for each tank. SRS also has upgraded its program for settlement monitoring. Surveys of settlement markers on the tank systems are completed yearly. No appreciable settlement has been noted for these systems since this upgrade.

Details on the Hold Tanks design can be found on page 35 of the Phase I assessment.

Comment # 12

Provide details to show that leakage will not occur at the anchor bolts used to fasten the stainless steel liners to the underlying concrete. In Section 3.5.3, stainless steel to stainless steel contact will typically not prevent leakage. Demonstrate the compatibility between any caulking- type material that is used for this purpose and the wastes managed.

Phase	Section	Subject
II	*3.5.3*	*EVAPORATORS*
II	*3.8.3*	*DIVERSION BOXES*

Response

As noted on p. 77 of the Phase II Tank Assessment Report, Evaporator Foundation Support, anchor bolts (also referred to as expansion bolts in the report) have caps over them. The caps are seal welded to the liner to prevent liquid from contacting the bolts. The seal welds were vacuum leak checked. This is also the case with the diversion boxes.

Comment #13

The report states that no specific design standards were used for these pipes, that most of them are buried below grade, and that a minimum soil cover thickness has not been established for pipes at the site. Discuss the precautions that have been taken to prevent damage to these waste pipes or their secondary containment devices due to vehicle traffic and any other surface loads.

Phase	Section	Subject
II	*3.5.1*	*EVAPORATORS*
II	*3.7.1.3*	*TYPE I TRANSFER LINES*
II	*3.7.2.3*	*TYPE II/IIA TRANSFER LINES*
II	*3.7.3.3*	*TYPE III/IIIA TRANSFER LINES*
II	*3.7.4.3*	*TYPE IV TRANSFER LINES*
II	*4.5.5*	*EVAPORATORS*

Response

DuPont site standards for burial of pipe were in place from at least 1959 and probably earlier. Standard P4D titled "Protection of Underground Lines at Road and Railroad Crossings on Company Property" quotes industry standards put out by the American Association of State Highway and Transportation Officials and by the American Railway Engineering Association. The current minimum soil thickness above transfer lines not passing under a road or railroad is 2'6". For those passing below a road or railroad, it is 3'6".On occasion, when unusually heavy loads were to be moved, metal plates have been placed over buried lines to assure that the load is adequately distributed.

Past experience and current research has not revealed any process lines in the tank farms that have been in violation of the standard. However, there are existing service lines (i.e., steam, domestic water, etc.,) that do not meet this standard. In these cases, these lines have been marked. No transfer line problems have been traced to vehicle load damage.

Comment # 14

Provide details about the "visual monitoring" that is mentioned in the first paragraph of this report.

Phase	Section	Subject
I	*3.1.4*	*TANKS 48 AND 49*

Response

On page 23 of the Assessment the visual and photographic inspection is described in some detail. In addition, Attachment B of the Phase I Tank Assessment and Attachment D of the Phase II Tank Assessment carry further discussion of photographic inspections. An Annual Tank Inspection Report that includes a summary of inspections made, visual, photographic, and ultrasonic, is provided in Attachment 2.

Comment #15

Demonstrate that all leak detection systems for all tanks and ancillary equipment are capable of detecting any size leak (especially small ones) within 24 hours, and that the removal systems can also properly remove any leaks within 24 hours. Adequate removal (and possibly tank emptying) capabilities are especially important for tanks that do not have full secondary containment and pump the leaked materials from the annulus pans back into the leaking tanks. State the maximum time required to remove waste from the tank secondary containment system, either by using the waste removal jet pump and/or by lowering the tank level. If leak detection and removal is not possible within 24 hours, describe the system modifications that will be implemented to meet this requirement, or demonstrate that existing technologies do not allow detection and removal within 24 hours.

Phase	Section	Subject
I	*3.1.4*	*TANKS 48 AND 49*
II	*3.1.4*	*TYPE I WASTE TANKS*
II	*3.2.4*	*TYPE II WASTE TANKS*
II	*3.3.4*	*TYPE III/IIIA WASTE TANKS*
II	*3.5.4*	*EVAPORATORS*
II	*3.6.4*	*PUMP PITS*
II	*3.7.1.4*	*TYPE I TRANSFER LINES*
II	*3.7.3.4*	*TYPE III/IIIA TRANSFER LINES*
II	*3.7.4.4*	*TYPE IV TRANSFER LINES*
II	*3.8.4*	*DIVERSION BOXES*

Response

SRS has extensive controls in place to prevent leaks, to detect leaks, and to prevent any leaks from reaching the environment. This program is described in detail throughout the Phase I and Phase II Assessment. In summary, this program includes 1) chemistry control of the waste to prevent conditions which could generate leak sites, 2) continuous leak detection in all tanks, 3) a high level of surveillance and monitoring, 4) regular visual and photographic inspections to detect leaks, 5) an installed jet or pump in each annulus (or leak detection system of the type IV tanks) to remove waste that has leaked from the primary, and 6) ventilation of the annulus for all tanks with annuli.

Note that the ventilation of the annulus, evaporates the liquid and actually increases the time required to detect a leak. But this control is protective of the environment because it reduces the volume of waste that leaks and reduces the chances that this waste will reach the environment.

Regarding the questions asked in Comment 15, these address two issues 1) capability for detection of leaks, and 2) capability for removing waste from secondary containment. These issues are addressed separately, as follows:

CAPABILITY FOR DETECTION OF LEAKS. Liquid that collects in the annuli of tanks, in the sumps of evaporators, pump pits, and diversion boxes, or in the leak detection boxes of transfer lines will be detected when the liquid reaches a conductivity probe or flows to a sump. As described in the various sections of the Phase I and Phase II assessments continuous leak detection is provided for each piece of equipment with secondary containment. Thus, leaks that pose an environmental threat (i.e. significant amounts of liquid) will be detected promptly, much less than 24 hours.

Leak detection is not possible in 24 hours for small leaks that are too small to flow to a leak detection probe or sump. However, such leaks do not represent an environmental threat. For example, in nine type I and II tanks, hairline cracks developed that allowed seepage of waste from primary to secondary containment. In many cases, the seepage from these cracks was so slow that the waste dried on the exterior surface of the primary tank and formed a salt encrustation called a "nodule" on the surface of the tank. Such a nodule cannot be detected by the leak detection system, but the waste in such a nodule is immobile and poses no threat of breaching secondary containment as long as it remains on the wall of the primary tank. SRS knows of no technology that could be retrofitted into these tanks (or into the associated ancillary equipment) that would assure 24-hour detection of such leaks.

CAPABILITY FOR REMOVING WASTE FROM SECONDARY CONTAINMENT. Liquids can be removed from secondary containment within 24 hours. As described in the various sections of the assessments, each piece of equipment with secondary containment has an installed means of removing liquid from secondary containment.

In reference to the concern about tanks without full secondary containment, the pumping capacity of tank annulus jets is far in excess of anticipated leakage rates. SRS administrative procedures require that "Jets or other pumping devices with a combined capacity of 75 gpm or greater must be installed in the annulus of each double-wall tank. The pumps must be operable within 24 hours."

Based on experience, the leakage rates of SRS tanks is expected to be small, less than four gpm (see Section below). Thus, the minimum required pumping capacity for any tank (75 gpm) is adequate to remove a 24-hour accumulation of a 4 gpm leak in about 1 hour, 20 minutes.

While it is possible to remove liquid promptly, as described above, dried waste deposits can not be removed with currently available equipment. However, as noted in the previous section, such deposits do not represent an environmental threat because they are immobile. The waste removal projects that will provide equipment for removing waste from the tank primaries will also provide equipment for removing waste from the secondary containment of tanks that have leaked.

LEAKAGE FROM TANK 16. Tank 16, a type II tank, was the worst leaking tank at SRS. In 1960 the waste level exceeded its annulus pan for a few hours, causing a small amount of waste to seep into the soil. Lessons learned from this incident were one of the factors that caused SRS to impose a number of controls on high-level waste management that have successfully prevented further incidents of this type.

Tank 16 no longer contains waste and is now an RFI site. Information on leakage from this tank is contained in a public document by W. L. Poe, "Leakage From Waste Tank 16; Amount, Fate, and Impact," DP-1358, November 1974.

One of the major factors that contributed to the tank 16 incident was the fact that tank 16 had no installed annulus jet at the time the incident occurred, which would be prohibited by current procedures. A transfer jet was installed when it became apparent that the leakage threatened to exceed the height of the annulus pan, but this occurred approximately 10 months after leakage was first observed in the tank.

The worst leakage from tank 16 was in September through October 1960. The rate peaked at 4 gpm on October 1, 1960 (W. L. Poe), which is why this rate was used in the calculation above. This leakage rate is far in excess of what can be expected from current waste tanks for the following reasons:

- **High Number of Leaks** Tank 16 has an estimated 350 cracks, compared to about 50 for the next most-cracked tank (tank 14). Observed crack sites in the remaining eight tanks with cracks total less than 30.

- **Lack of Annulus Ventilation** The annulus ventilation system in tank 16 was shut off in November 1959, not long after leakage was first detected from the tank. The ventilation system remained inoperative for most of the time through September 1960. Annulus ventilation is now required on all SRS tanks with annuli. Experience has shown that it is effective at reducing seepage rates and arresting the leak.

- **Continuation of Waste Receipts** Waste receipts continued in tank 16 until May 1960, approximately 6 months after the tank was discovered to be leaking. Such continuation of receipts would be prohibited by current procedures. Continuing waste receipts had several deleterious effects: 1) it allowed waste to continue to seep into an annulus that became increasingly wet because of the lack of ventilation, 2) it increased the hydraulic head on the crack sites, increasing the rate of leakage, and 3) it allowed continued stress corrosion cracking, providing new opportunities for cracks.

- **Liquid Remained in Tank Above the Leak Sites.** Once the tank was filled in May 1960, no attempt was made to remove liquid to prevent further leakage. In spite of this fact, the leakage rate remained below 1 gpm until early September. At that time, the seepage rate began to steadily increase, reaching a peak of 4 gpm on October 1, 1960. If liquid had been removed from the tank before September, the maximum leakage rate would have been less than 1 gpm.

• **High Hydraulic Head** Tank 16 was nearly filled with unconcentrated liquid at the time of the incident. Records show 10 to 12 inches of sludge, the balance being fresh canyon supernate before evaporation, with a total of 303 inches of waste as measured by the reel tape. (T. L. Davis et. al., "History of Waste Tank 16; 1959 through 1974, "DPSPU 77-11-17, July 1977) The fill limit for a type II tank is 306 inches. Therefore, the leaks in tank 16 were subjected to considerable hydraulic head with unconcentrated liquid, much higher than currently existing in SRS waste tanks with leakage history and higher than they will experience during waste removal.

Comment # 16

Discuss the types and frequencies of any tests that are used to ensure that the leak detection and removal systems are in proper working order at all times.

Phase	Section	Subject
I	*3.1.4*	*TANKS 48 AND 49*
II	*3.1.4*	*TYPE I WASTE TANKS*
II	*3.2.4*	*TYPE II WASTE TANKS*
II	*3.3.4*	*TYPE III/IIIA WASTE TANKS*
II	*3.5.4*	*EVAPORATORS*
II	*3.6.4*	*PUMP PITS*
II	*3.7.1.4*	*TYPE I TRANSFER LINES*
II	*3.7.3.4*	*TYPE III/IIIA TRANSFER LINES*
II	*3.7.4.4*	*TYPE IV TRANSFER LINES*
II	*3.8.4*	*DIVERSION BOXES*

Response

There are a number of different methods used to detect leakage from tanks and lines. These include conductivity probes, level measurement devices, and visual/photographic inspections. There is a program in place to assure adequate performance of the leak detection devices. Frequency and test method varies for each device. For example, functioning of the conductivity probes in the tank annuli are scheduled every six months and are always done within twelve months. Liquid level devices in the tanks are checked about every two months. Visual/photographic inspection of the primary tank walls to detect signs of leakage is done every two years. Operations personnel verify conductivity probe operation on transfer line secondary containment daily and maintenance personnel check them once per month.

Liquid removal systems in the tank annuli, sumps, and leak detection boxes cannot be readily tested because it would require adding water to the device and pumping it out, there by creating additional liquid waste. However, steam jets (the most common removal device) can be readily and quickly replaced if found to be inoperable during a removal operation and can be substituted by a pump in an emergency.

Comment # 17

Discuss the soil monitoring immediately surrounding these systems.

Phase	Section	Subject
II	*3.1.4*	*TYPE I WASTE TANKS*
II	*3.2.4*	*TYPE II WASTE TANKS*
II	*3.3.4*	*TYPE III/IIIA WASTE TANKS*
II	*3.4.4*	*TYPE IV WASTE TANKS*
II	*3.5.4*	*EVAPORATORS*
II	*3.6.4*	*PUMP PITS*
II	*3.7.1.4*	*TYPE I TRANSFER LINES*
II	*3.7.3.4*	*TYPE III/IIIA TRANSFER LINES*
II	*3.7.4.4*	*TYPE IV TRANSFER LINES*
	3.8.4	*DIVERSION BOXES*

Response

There is no direct soil monitoring currently being done around these systems. However, dry wells are used to measure radiation levels in the soils. There are several wells located in both F and H Areas. An extensive groundwater monitoring program also exists to detect releases from the tank farms. The groundwater is monitored for both radioactivity and chemical constituents. Results for both of these types of wells can be found in the "Savannah River Site Environmental Report," WSRC-IM-91-28. These results are used as a historical basis for the detection of contamination.

Comment #18

Due to the location of the "high liquid level" probes in the sumps within the ITP Filtrate Hold Tank Room, and the long travel distance across two to three rooms to the sump, describe how small leaks will be detected and removed within 24 hours. If such leak detection and removal is not possible within 24 hours, describe the system modifications that will be implemented to meet this requirement, or demonstrate that existing technologies do not allow detection and removal within 24 hours.

Phase	Section	Subject
I	*3.2.4*	*ITP FILTRATE HOLD TANKS*
I	*3.3.1.4*	*ITP CROSS-FLOW FILTERS*
I	*3.3.2.4*	*STRIPPER COLUMNS*

Response

A walk-through surveillance of the ITP Filtrate Hold Tank Room, Stripper Column Room, Bottoms Pumps Room, Domestic Water Break Tank Room, and the Electrical Control Room will be conducted daily. Written procedures are in place that require the observer to look carefully for small leaks and increased sump levels and to report them immediately to supervision. This will allow detection of leakage within the prescribed time period. Cleanup can be initiated quickly.

Comment # 19

Include a discussion as to how a leak in the secondary containment structure would be detected.

Phase	Section	Subject
I	*3.1.4*	*TANKS 48 AND 49*

Response

The type IIIA tanks (Tanks 48 and 49 are type IIIA tanks) have a system to detect leakage from secondary containment. The system consists of a grid of channels in the concrete beneath the secondary tank. The channels drain to a sump at the perimeter of the tank, where the drained liquid can be sampled and pumped out. This sump contains a conductivity probe which alarms in the appropriate control room.

Comment #20

Clarify if the fill limit probes are always located 10 inches below the lower of the two possible fill levels (i.e., below the design fill limit or the lowest leak site, whichever is lower).

Phase	Section	Subject
II	*3.1.4*	*TYPE I WASTE TANKS*

Response

The design fill limits are based on preventing overflow of a waste tank or not exceeding allowable stresses in a waste tank. Two independent level alarms are provided for each tank. The high liquid level conductivity probe (HLLCP) is located at least five inches below the design fill limit. The HLLCP provides audible and visual alarms upon contact with liquid. The reel tape conductivity probe (fill limit probe alarm) alarms visually and audibly when the liquid level reaches at least ten inches below the design fill limit. The HLLCP and the reel tape conductivity probe alarm provide redundant level alarms below the design fill limit.

When substantial surface liquid is present in a tank, the reel tape conductivity probe alarm is maintained at least ten inches below either the design fill limit or the lowest known leak site, whichever is lower. When there is little or no surface liquid in an inactive tank (i.e., only solids with very low mobility), the reel tape conductivity probe alarm is always maintained at least ten inches below the design fill limit. However, this is not always ten inches below the lowest known leak site.

Comment #21

Provide additional design details about the bottom leak collection system and detection sump to show that it functions as planned, and is not a release pathway for leakage (i.e., does not have cracks or gaps that would allow migration). Also, discuss how often it is monitored, and what tests are performed to detect leakage.

Phase	Section	Subject
II	*3.4.4*	*TYPE IV WASTE TANKS*

Response

Functional testing of the Type IV Waste Tank bottom collection system is not possible. However, the sump liquid levels have continuous readouts in the control rooms and are verified daily. But, to verify waste has not leaked from the waste tank and from the bottom leak collection system, the groundwater is monitored in both tank farm areas around the Type IV Waste Tanks. Because the waste in these tanks is dilute Low Heat Waste, it has a higher mobility and would presumably flow by gravity through the path of least resistance. Therefore, if a tank leak occurred, the waste would first show up in the bottom leak collection system. If the leak was not contained by the bottom leak collection system, an increase in groundwater activity should be detected after the occurrence.

Comment #22

Provide details to show how "Two vertical pipes, 180 degrees apart, connect the sidewall leak detection channel to the bottom leak detection channel." Figure 3.5 shows the vertical pipes outside the area of the bottom channels.

Phase	Section	Subject
II	*3.4.4*	*TYPE IV WASTE TANKS*

Response

The H-Area Type IV sidewall sumps have a curb surrounding the tank on the outside of the two vertical pipes. Figure 3-5 does not show this detail.

Comment #23

Discuss how often the sidewall leak detection system is monitored, and what tests are performed to detect leakage. Also, provide information about the levels to which "perched" groundwater is allowed to rise before it is removed, and how long this water is allowed to accumulate before it is removed.

Discuss how sidewall leaks are monitored for F-Area tanks.

Provide details about the waste level monitoring systems in these tanks, including type, frequency of readings and sensitivities to changes in the waste levels.

Phase	Section	Subject
II	*3.4.4*	*TYPE IV WASTE TANKS*

Response

The sidewall leak detection sump level is monitored weekly for Tanks 21-24H. The liquid is not pumped out at a specified frequency, but rather, it is pumped out when the sidewall sump level exceed 40" or less than 12" below the liquid level in the tank, whichever occurs first. The liquid is sampled and analyzed for radioactivity before being pumped out. The liquid measured is normally perched groundwater containing no radioactivity.

Sidewall sumps do not exist on F-Area Type IV tanks (Tanks 17-20F). As with Tanks 21-24H, leaks from the side of the tanks in F-Area would reach the bottom leak detection sump and be detected by the bottom leak detection sump instrumentation which is continuously monitored. Liquid removed from the bottom leak detection sumps is sampled and analyzed for radioactivity. This sampling is done weekly providing there is liquid in the sump.

The waste level monitoring systems in the Type IV Waste Tanks are basically the same as those used for Type I Waste Tanks (described in Section 3.1.4, Instrumentation).

Comment #24

The report is rather sketchy about design and operational details, pumping rates, etc. for the catch tanks and their encasements. Provide sufficient details to demonstrate that these units perform as required and do not leak. Also discuss how the unlined concrete encasements, which receive all wastes before the catch tanks do, prevent migration of the waste into or through the concrete and any cracks, gap or joints in the encasements. Further, discuss the final disposition of any wastes collected in the catch tanks.

Phase	Section	Subject
II	*3.7.1.4*	*TYPE I TRANSFER LINES*

Response

The catch tank's function is to collect drainage from a diversion box for Type I Tanks, and from the underground transfer line encasements serving the Type I tanks in F-Area and Type I and II tanks in H-Area. However, in H-Area, the diversion box that did drain to the catch tank is now pumped to a pump tank. The catch tank is enclosed in a sealed concrete encasement which has a sump provided with instrumentation that would detect a leak from the catch tank. Both the catch tank and sump contain a steam jet that is used to empty any contents that may be collected. If waste ever enters the catch tank during tank farm operations, the waste would be emptied to a Type III/IIIA waste tank. Groundwater inleakage, which enters through the joints in the transfer line encasement cover slab, also collects in the catch tank. In H-Area, it is pumped to the Effluent Treatment Facility but in F-Area, it is emptied to a waste tank.

The portions of the transfer line encasement that have been inspected have been found to be free of cracks. However, numerous vertical stains appear on the walls of the encasements. This indicates that water has run from the joint (between the cover block and "trough") and down the walls.

The professional engineer who stamped the assessment reviewed photographs of the encasements associated with the type I transfer lines, as noted in his certification statement (Phase II assessment, page 154). He agreed that this evidence was sufficient to conclude that the lines had adequate secondary containment (page 102).

Comment #25

Describe what type of "normal surveillance" or operator suspicion, other than finding liquid via the leak detection equipment, would prompt an operator to conduct an air leak test. Also discuss which sections of this type of pipe are "amenable to the test", and which are not.

Phase	Section	Subject
II	*3.7.2.4*	*TYPE II TRANSFER LINES*

Response

The primary method of "normal surveillance" for conducting an air leak test is an SRS administrative program which prompts the air leak testing of the carbon steel jackets on active testable lines that have not been tested in the past two years prior to utilization of the line. "Operator suspicion" for conducting an air leak test encompasses receiving a leak detection alarm on a line that is being utilized.

A computer database in F and H area exists which lists all the active lines in the tank farms and specifies which line segments are "amenable" to the air leak test as well as provides the testing status of each. The computer database is updated each time a line segment is tested.

The design of the line determines whether it is "amenable" to the test. For instance, jackets which contain asbestos seals cannot be subjected to an air leak test. Even though verification of secondary containment is not required, SRS does provide other leak testing (e.g., air leak testing, helium testing, or other methods) in order to verify the integrity of active lines.

Comment #26

Provide details to demonstrate that all joints between secondary containment jackets, drain pipes, LDB's, diversion boxes, pump pits, overflow drains, waste tanks, drain cells, final catchment, etc. are continuous and liquid tight.

Phase	Section	Subject
II	*3.7.2.4*	*TYPE II TRANSFER LINES*

Response

All joints in the steel secondary containment systems of the Type II transfer lines were welded and built to specifications, at the minimum, requiring vacuum leak checks. Joints that failed the test were re-welded. In addition, when the secondary containment system is leak tested, all these same joints are re-verified as liquid tight. Operating procedures do not allow use of any line that fails a leak test until repaired, replaced, or determined that no threat of leaks exists.

Comment #27

Provide justification for the statement that no leaks have been detected in any Type III/IIIA Waste Tanks, including consideration of small leaks on the tank bottoms that cannot be detected visually or electronically and may be evaporated by the annulus cooling system.

Phase	Section	Subject
I	*3.1.5*	*TANKS 48 AND 49*
II	*3.3.5*	*TYPE III/IIIA WASTE TANKS*

Response

The statement that no leaks have been detected is simply a statement of fact that is supported by a considerable number of inspection records and photographs.

The inspection photographs also demonstrate that the portions of the tanks that can be inspected are in good condition. Since the conditions (materials of construction, temperature, humidity, and waste composition) are similar in the visible and non-visible portions of the tanks, this provides some assurance for portions of the tank system that cannot be inspected. The Annual Tank Inspection Report, which contains further details, is provided as Attachment 2.

However, as is noted in these assessments, some portions of the tanks are not visible and cannot be inspected. During negotiation of the FFA, this fact was recognized by the Parties negotiating the agreement, which is why the draft FFA requires SRS to document the limitations of integrity examination techniques and have such documentation certified by a registered professional engineer (FFA, appendix B, paragraph A.5). SRS fulfilled this requirement in Attachment B to the Phase I Assessment, and Attachment D to the Phase II Assessment.

The SRS inspection program is protective of the environment. While it's true that small leaks on the tank bottom might not be detected, such leaks would not threaten the environment because the waste would be immobile. Furthermore, SRS knows of no inspection technology that could be retrofitted on these existing tanks that would assure detection of all leaks, no matter how small.

Comment #28

The report does not provide information regarding existing crack and leak site locations, the number of cracks or leak sites per tank, potential flow rates through the leak sites, or the current levels of liquid, semi-solid and solid waste layers in the tanks. It also does not evaluate the current stress levels at crack and leak sites, or evaluate the future performance of the tanks when they are filled and agitated during future waste removal operations. These aspects appear to be very important since the stress corrosion cracking (which has reportedly caused the cracks) is highly influenced by the presence of supernate and high stresses (both of which will be present during waste removal).

Discuss the potential for new crack initiation, and propagation of existing cracks, during future waste removal operation. Also describe the steps that will be taken to control leaks, stresses, crack propagation and initiation, etc. during waste removal.

Provide information regarding the expected leakage rates of the various tanks during waste removal operations (e.g., quantity, and will they "spray" onto unlined concrete if under a high head). Also demonstrate that the containment and removal systems will be capable of preventing releases of these leaks to the environment (e.g., they have adequate pumping rates, available alternative storage capacity for removed leaks, free of cracks and gaps, etc.).

Phase	Section	Subject
II	*3.1.5*	*TYPE I WASTE TANKS-SC*
II	*3.2.5*	*TYPE II WASTE TANKS-SC*
II	*3.4.5*	*TYPE IV WASTE TANKS-SC*
II	*4.1.5*	*TYPE I WASTE TANKS-PC*
II	*4.2.5*	*TYPE II WASTE TANKS-PC*
II	*4.4.5*	*TYPE IV WASTE TANKS-PC*

Response

INFORMATION ON CRACKS. The Annual Tank Inspection Report (Attachment 2) contains information on cracks and leaks in SRS tanks.

LEAKAGE RATES. Leakage rates during normal storage of waste have already been discussed in the answer to Comment #15.

Leakage rates during waste removal are expected to be small. During waste removal from tank 16, the tank experienced several operations that had the potential to reactivate leak sites: 1) slurrying in which water was added and agitated to suspend sludge, 2) spray washing, in which powerful rotary sprays were used to spray hot water on the walls of the tank, and 3) oxalic acid cleaning, in which hot oxalic acid was sprayed through the spray washing equipment.

The annulus of Tank 16 was monitored closely during waste removal because of the potential for leakage. Although photographs taken before and after all three operations demonstrate some growth of the salt nodules during this period, indicating that minor leakage occurred, no active leakage was observed during slurrying or oxalic acid cleaning. Slight leakage was observed during spray washing, although the water evaporated before it reached the annulus floor. (W. L. West, "Tank 16 Demonstration; Water Wash and Chemical Cleaning Results," DPSOP 80-17-23, 16 December 1980)

Leakage from future waste removal operations in cracked tanks are also expected to be low, probably lower than tank 16, for the following reasons:

• LOWER HYDRAULIC HEAD. Typical waste removal batches are 100,000 to 300,000 gallons, corresponding to 29 to 86 inches of hydraulic head in a type II tank. This compares to 291 inches of head for tank 16 during its period of highest leakage.

• LOWER NUMBER OF CRACK SITES. As previously noted, tank 16 is the worst cracked tank at SRS and is now empty.

• ANNULUS VENTILATION. Annulus ventilation will be appropriately maintained during all future waste removal operations. Ventilation will 1) reduce the leakage rates, and 2) reduce the probability that waste will reach the annulus floor.

However, SRS recognizes that a small possibility exists that leakage during a future waste removal operation may be higher than experienced during tank 16 waste removal. As previously noted in the response to Comment #15, SRS systems and procedures are adequate to handle a leak in excess of the worst leak experienced (the 4 gpm leak from tank 16), so such leaks could be safely handled even if the leakage were severe. In such cases, compensatory measures could be employed, for example doing waste removal in a large number of small batches, although such compensatory measures would increase the time required to complete waste removal.

SPRAYING OF WASTE. The potential for spraying of waste is remote. No indications of spraying have been observed in any tank. In the observed leaksites, waste has either stayed in place on the primary wall or dripped down the primary wall, in some cases reaching the annulus floor. Furthermore, as noted above, the hydraulic heads that will be experienced during waste removal are lower than already experienced in these tanks.

STRESS LEVELS AT CRACK SITES. Fill limits have been established for cracked tanks and are contained in a reference in the Phase II assessment (DPSTS-241, "Technical Standard; Waste Tank Farms," Savannah River Laboratory, E. I. duPont de Nemours & Co., Aiken, June 1986). The limits for cracked tanks are based on maintaining the combined stress resulting from normal stress and a design basis earthquake below the limit for ductile tear at the crack tips.

These limits will be adhered to during waste removal.

CAPABILITY TO PREVENT RELEASES TO THE ENVIRONMENT. The rates of leakage and the ability of tanks systems to deal with them were addressed in the answer to Comment #15. Regarding storage capacity, SRS procedures require that emergency storage capacity be available sufficient to contain the full contents of the largest tank (i.e. 1.3 million gallons). The purpose of this requirement is primarily to provide emergency space for a leaking tank.

POTENTIAL FOR CRACK INITIATION OR PROPAGATION. The potential for significant crack initiation or propagation during waste removal is small for the following reasons:

• Stress corrosion cracking occurs in the highly stressed regions near the weld bead of tanks (Phase II Assessment, Attachment C, third page). The crack propagates rapidly, but stops propagating when it reaches a region of lower stress.

• All of the SRS cracked tanks were exposed to uninhibited solutions for a number of years. Thus, existing crack propagation should have terminated before the liquid level was lowered below the leak site.

• In the mid-1970s SRS established composition limits that require additions of inhibitors (sodium hydroxide and/or sodium nitrite) at sufficient levels to prevent stress corrosion cracking (Phase II Assessment, Attachment C, fourth page). Since initiation of this program, no new leak sites have initiated. These composition limits will be adhered to during waste removal. If any waste is dissolved and found to be out of limits, the composition will be adjusted to within limits as soon as possible.

Comment #29

Discuss how the crack was discovered in Tank 20. State whether any further investigation for cracks was performed, and if any cracks were found as a result, in Tank 20 after it was emptied. Discuss future uses for this tank. Since Tank 20 has no sidewall monitoring, discuss the potential that such leaks have gone undetected.

Phase	Section	Subject
II	*3.4.5*	*TYPE IV WASTE TANKS*

Response

Three anomalous spots were observed on the interior wall of Tank 20 during a routine photographic inspection of the tank interior in 1983. One spot was further tested, and it was determined that a penetration existed completely through the steel liner. The other two spots, which look similar, are assumed to be penetrations, although these two spots have never been tested.

Since 1983 the tank has undergone a number of interior inspections to within three inches of the tank bottom. A fourth anomaly was suspected and confirmed during this inspection. More information on these spots can be found in the Annual Tank Inspection Report (Attachment 2). No other anomalies have been observed in the steel liner.

There are no current plans to use tank 20 for any future waste service.

Two pieces of evidence suggest that leaks through the walls of type IV tanks can be detected as increases in activity in the leak detection sump. First of all, during inspections in tank 20, the first anomalous site was cleaned with an abrasive slurry which was blasted at the spot from the interior of the tank. Elevated levels of activity were detected shortly thereafter in the tank 20 bottom leak detection sump. This suggests that the slurry blasting forced contamination through the crack, and the contamination migrated to the sump. Secondly, tests in tank 24 showed that deuterium oxide (D20) released into the tank vapor space caused increased levels of D20 in the tank bottom leak detection sump. The most reasonable path for migration of the D20 was around the flashing at the top of the tank wall and down the outside of the tank walls to the drainage channels. The experiment suggests that migration paths exist for contamination to travel from the top of the tank to the leak detection drainage channels.

Comment #30

Describe the methods used to "discover" any leaks through the stainless steel liners.

Phase	Section	Subject
II	*3.6.5*	*PUMP PITS*

Response

There are no direct methods for the discovery of leaks through the secondary containment. However, Pump Pits 2, 3 and the Concentrate Transfer System in F-Area and Pump Pits 5 through 10 and the Concentrate Transfer System in H-Area have underliner sumps, which are checked and emptied when required. There are also groundwater monitoring and dry wells in these areas.

Comment #31

Clarify whether the secondary containment systems have been repaired at all interfaces between Type I pipe encasements and boxes or risers, or if this was done only at those which have leaked in the past. Provide details to demonstrate that liquid-tight seals have been created at these interfaces and penetrations.

Phase	Section	Subject
II	*3.7.1.5*	*TYPE I TRANSFER LINES*

Response

The discussion about a leak induced by chloride stress corrosion cracking of a primary line in the concrete wall of the H and F-CTS was incorrectly identified in the assessment report as a Type I transfer line, a pipe in a concrete trench. These transfer lines were correctly identified on Figures 3-10 and 3-11 as Type II transfer lines.

All transfer lines on the two CTS's have been repaired at the CTS box. The secondary pipe was extended through the wall of the box and a leak detection box installed on each line. If a leak were to occur today in the same locations, the liquid would either be detected in the leak detection box or inside the CTS box.

The PE that performed the assessment carefully considered all information available and concluded that Type II waste transfer lines "... have been determined to satisfy the FFA criteria for secondary containment as listed in section 2.1 (of the Phase II Assessment Report); ..."

Comment #32

Discuss whether any of the first three leaks that are listed, released outside of the secondary containment.

For the third leak listed, describe what precautions are in place to prevent leakage from the condensate drain that was installed.

Discuss why the fourth leak is so difficult to locate, current investigative measures, and why this occurrence will not be duplicated.

Phase	Section	Subject
II	*3.7.2.5*	*TYPE II/IIA TRANSFER LINES*

Response

The first three leaks that were discussed were into the secondary containment (jacket leaks), not core pipe leaks. Thus, there was no release of waste to the environment.

The information on these leaks was taken from a metallurgical report produced by a support group. Their findings were noted and it was recommended that a drain be installed for the containment jackets. However, further testing revealed a low spot in the gravity drain line and the line was repaired by removing and replacing an eighteen foot section of the line. This eliminated the low point and therefore, the drain recommended in the metallurgical report was not needed and was not installed.

The primary problem with investigating the fourth leak (the 1989 leak of the Tank 35 to 37 H-CTS loop line) has been the high radiation rates in the vicinity of the leak. Because of the radiation rates, all investigation had to be done remotely. At the time, the leak was discovered, various test were conducted (e.g., air pressure testing, helium testing, and photographic inspection) but all were found to be inconclusive.

An evaluation will be performed to determine if any other testing is to be done. These tests would possibly provide additional data to help determine the cause of the failure. However, since the loop line is abandoned in place and will not be used for waste transfers, a cost/benefit analysis will need to be performed to determine if additional testing is warranted. The analysis will also have to determine if the exposure to radiation and the contamination potential is warranted.

As a result of this line failure, the pressure testing program (as described in Comment 25) was initiated.

Comment #33

This section states that groundwater has infiltrated the containment jacket of one pipe. Discuss whether this pipe is still in service. If so, discuss what measures have been or will be taken to repair this leak.

Phase	Section	Subject
II	*3.7.3.5*	*TYPE III/IIIA TRANSFER LINES*

Response

There is no current documentation or knowledge of this leak occurring. Current evaluation of the work performed for the assessment has not produced any evidence of this leak. No other documented leaks have occurred in this type of line.

Comment #34

Sections 3.8.3 and 3.8.5 show that some of the stainless steel liners have buckled. Discuss what types of tests or inspections have been performed on the remaining diversion boxes to ensure that they are not leaking.

Phase	Section	Subject
II	*3.8.5*	*DIVERSION BOXES*

Response

All diversion boxes are examined informally each time they are opened for operational purposes and no formal records of the examinations are made unless some unusual feature is noted. There is no requirement that inspections be performed on a specified frequency. However, visual inspection is most frequent where there is a potential for significant leakage from jumper changes or maintenance operations. Video inspections similar to those discussed in the tank assessments for tank inspections are used. Obvious buckling of the liner or separations of the liner from the concrete would likely be detected in these inspections. When the boxes are installed, the welds are inspected and tested for leaks. Unless damaged, as in the case of FDB2, they would not be expected to leak.

Comment #35

Provide design details which show that the stainless steel liner is continuous and prevents leakage behind the liner at all tank leg pedestals, pump pads, pipe penetrations through walls and floors, sumps and other susceptible location.
Also provide this information for the hold tank cell liners for the 242-16F/-16H evaporators.

Phase	Section	Subject
I	*3.2.1*	*ITP FILTRATE HOLD TANKS*
I	*3.3.1.1*	*ITP CROSS-FLOW FILTERS*
I	*3.3.2.1*	*STRIPPER COLUMNS*
II	*3.5.1*	*EVAPORATORS*
II	*3.6.1*	*PUMP PITS*

Response

In all installations where there are penetrations of the stainless steel liner, the liner was welded to that penetrating item (e.g., tank leg pedestals, pipe penetrations, etc.) and the weld is tested for leak tightness. This also applies to the evaporator lined hold tank cell liners. The second paragraph on page 35 of the Phase I Assessment Report explains how the stainless steel liner covers the concrete pedestals supporting the Filtrate Hold Tanks. Additional information on this subject may also be found in the answers to Comments 12 and 53.

Comment #36

Furnish information as to whether or not the gutter and sump are lined with stainless steel. If stainless steel is not provided, discuss how leaks will be prevented from migrating into or through the concrete and any gaps.

Phase	Section	Subject
I	*3.2.1*	*ITP FILTRATE HOLD TANKS*

Response

The gutter and the sump for the ITP Filtrate Hold Tank are lined with stainless steel.

Comment #37

The text and Figure 3-7 indicate that the stainless steel liner is essentially in contact with the adjacent walls. However, Figure 3-8 shows a considerable distance between the liner and walls. Resolve this discrepancy.

Phase	Section	Subject
I	*3.2.1*	*ITP FILTRATE HOLD TANKS*

Response

The stainless steel liner is fabricated to make the gap between the liner and wall as small as possible. Figure 3-8 is not to scale and the gap shown is exaggerated. The gap in no way effects the secondary containment as explained in Comment #38.

Comment #38

The report states that the containment system height in the ITP hold tank area will be raised above the top of the existing stainless steel liner. Describe the methods that will be used to place the grout between the existing liner and walls. (for example, simply "pouring" the grout into a narrow space will generally not ensure complete or crack-free filling of that space.) Further, describe the measures that will be taken to ensure liquid-tight contact between the liner and grout, and the grout and walls, so that cracks or gaps which could allow leakage do not develop at these interfaces.

Phase	Section	Subject
I	*3.2.1*	*ITP FILTRATE HOLD TANKS*

Response

A fairly detailed explanation of the method of adding the grout to the crevice area between the concrete wall and the stainless steel liner and the coatings that will be applied before and after the grouting process can be found on pages 30-32 of the Phase I Assessment Report. The grout that will be used is especially formulated to avoid shrink problems. The finished surface required a hand finish so any cracks that had formed were filled at that time. In addition the grouting was covered with an epoxy coating after drying. It is highly unlikely that any liquid could get behind the liner under these conditions.

Comment #39

Provide further details to show that the "minimum vertical containment height of 16 inches along each wall of the hold tank area" is adequate to provide 12,000 gallons of containment, since the floor slopes 4-1/2 inches.

Phase	Section	Subject
I	*3.2.1*	*ITP FILTRATE HOLD TANKS*

Response

The liner dimensions are approximately 33'X38' (walls are about 1' thick). The original liner was 6" high around the room. Note that the sloping floor actually provides more volume since it slopes 4.5" over the building and extends below the nominal floor location. If it is assumed that the average additional space is 2.25", this increases the volume to about 6500 gallons. There is some loss due to the pump pads and other equipment supports but this is less than 10%. In addition the sump provides an additional volume of about 360 gallons. Thus, the original containment contains a minimum of 6000 gallons. This, of course, is less than the required 12,120 gallons (largest tank plus 10%). The additional coating up 16" above the nominal floor increases the containment volume to about 12,900 gallons, thereby meeting the desired containment volume.

Comment #40

Explain the significance of the term "non-coated" when referring to the containment area in the stripper building.

Phase	Section	Subject
I	*3.2.1*	*ITP FILTRATE HOLD TANKS*

Response

Non-coated refers to the concrete in the stripper building and hold tank areas that is above the secondary containment liner which has not been coated with the epoxy coating.

Comment #41

The information in the report does not clearly show that a large leak, especially a rapid one, will pass through the 6 by 6 inch opening into the stripper building before it escapes through a door. Provide clarification. Include elevations of the entry ways into this room and composition of the 6" square gravity drain.

Phase	Section	Subject
I	*3.2.1*	*ITP FILTRATE HOLD TANKS*

Response

The largest probable leak would be a break of the 3" line coming out of the bottom of the Hold Tank. The flow from this failure should easily be handled by the 6"x6" gravity drain. The leakage would run to a trough at the low end of the building and then to a 4'x4' sump where it can be pumped back to Tank 48. Both the trough and the sump are lined with stainless steel.

Both doorways are elevated and accessed by three stairs (including the doorway landing). The lowest door sill is 1'6" above the floor and is located at the high end of the Hold Tank Room. The doorway sill at the low end of the room, where the sump is located is 1'9" above the floor.

Comment #42

The last sentence of the last paragraph of this section states, "additional secondary containment is provided to a height (approximately 18 inches in the hold tank area)". However, previous discussions refer to epoxy (i.e., containment) height of 16 inches. Clarify or resolve this discrepancy.

Phase	Section	Subject
I	*3.2.1*	*ITP FILTRATE HOLD TANKS*

Response

The minimum height to which the coating will be applied will be 16". Normally when coating is applied there are variations in the height of application but the 16" minimum will be observed. There may be areas where the application is 18" high but that is not the requirement. As discussed above, the 16" height will be more than adequate.

Comment #43

Provide information which illustrates whether or not the square gravity drains through the wall are provided with stainless steel liners, and if they are continuously welded to the liners in the stripper area rooms.

Phase	Section	Subject
I	*3.3.2.1*	*STRIPPER COLUMNS*

Response

The drains through the wall are provided with stainless steel liners that are welded to the liners in the stripper area rooms.

Comment #44

Describe how any leakage above the upper (i.e., second floor) stripper supports will be prevented from leaving the Stripper Room. Figure 3-13 shows a potential pathway from the Stripper Room to the Break Water Room at this level. Otherwise, describe the secondary containment system within the Break Water Room.

Phase	Section	Subject
I	*3.3.2.1*	*STRIPPER COLUMNS*

Response

A concrete wall exists between the Break Water Room and the Stripper Room as shown on Figure 3-12. There is no requirement for containment for the Break Water Room because it contains only clean water, no process fluids. The drain from this room does direct any spillage from this room to the adjacent Stripper Column Room which ultimately drains to the Hold Tank Room sump.

Any leakage from the second or third levels of the Stripper Room will drain to the first level where the stainless steel liner provides containment. The floors in the second and third levels are steel grating.

Comment #45

The concrete, trench-like encasements and cement-asbestos jackets used for secondary containment are known to allow groundwater infiltration in some areas (i.e., they leak). Discuss what plans are in place to repair these breaches of the secondary containment system. Also, describe the types of coatings or interior liners used to prevent any releases from migrating into the concrete or cement of these structures. Further, discuss the condition of all joint fillers, caulking, gaskets, etc. used in these encasements and jackets, as well as their compatibility with the wastes managed.

Phase	Section	Subject
II	*3.7.1.1*	*TYPE I TRANSFER LINES*
II	*3.7.3.1*	*TYPE III/IIIA TRANSFER LINES*

Response

The trenches were cast in one piece and were leak-tight on three sides when installed. They are not coated on the inside. The only gasket material is between the sides of the trench and the top cover slab and between the sections of the top cover slab. This gasket material is not in contact with the waste or even with the pipes containing the waste. With age, the material does deteriorate. Hence, periodic inleakage of the groundwater is observed.

Since the trench encasements are watertight on three sides, the groundwater inleakage takes place only at the cap seams. The trenches are sloped in such a way as to drain to catch tanks which are emptied as needed and the water monitored for radioactivity before treatment and/or discharge. This inleakage in no way impairs secondary containment. All trenches are designed large enough to handle the flow of the largest lines contained in the trench without reaching the joint between the sides and the top cover.

As discussed previously, the cement-asbestos jacketed lines are now only used to transport wastes with lower levels of radioactivity. If water leaks into the jacket, it is collected at the end of the line in a tank or sump and is monitored before treatment and/or discharge. The quantity of inleakage is small enough that it is not a handling or treatment problem. Repairs are not contemplated since it would result in unnecessary radiation exposure.

Comment #46

The text and Figure 3-1 do not clearly indicate that the leak pans are continuous under the Type I tanks. Provide additional information regarding the continuity of these pans.

Phase	Section	Subject
II	*3.1.1*	*TYPE I WASTE TANKS*

Response

The leak pans under the Type I tanks are continuous. The appearance of discontinuity is an artifact of the figure.

Comment #47

Detail A on Figure 3-2 is very unclear. Provide clarifications about the material types, locations and thicknesses of all materials used to construct the tank system's bases and sides.

Phase	Section	Subject
II	*3.2.1*	*TYPE II WASTE TANKS*

Response

More detail on the tank construction and materials used may be found in the permit application (As-Built Construction Permit Application For An Industrial Wastewater Treatment Facility For The F and H-Area High-Level Radioactive Waste Tank Farms) on pages 303 through 311. There are minor differences from tank to tank.

Comment #48

Discuss the source of the small amounts of liquid that is removed by the annulus ventilation system.

Phase	Section	Subject
II	*3.3.1*	*TYPE III/IIIA WASTE TANKS*

Response

Small amounts of liquid present in the annulus result from rainwater inleakage through the annulus risers. The conductivity probes in the annulus are checked for contamination to verify the inleakage is not leaking waste.

Comment #49

Expanded vermiculite was used around the tank walls "to provide a cushion for thermal expansion of the tank due to heat generated by the waste". Discuss the potential for cracks to be generated in the concrete structural walls due to these thermal deflections, and any potential cracking or buckling of the steel tank walls that could occur because of the different thermal expansion properties of the steel and concrete.

Phase	Section	Subject
II	*3.4.1*	*TYPE IV WASTE TANKS*

Response

Expanded vermiculite allows the tank to expand freely by 'crushing' the vermiculite instead of acting against passive soil pressure. With enough heat input it is expected that the tank could expand sufficiently to crack the concrete. In order to crack the concrete in these tanks, the temperature of the concrete would need to be 200°F (the average temperature of the influents and tank contents is below 90°F). However, this tank shell was constructed with 'shot-crete' with adequate reinforcing such that concrete cracking is not detrimental. The static (gravity loads) and seismic evaluation of the tank were based on cracked concrete properties.

Buckling of the steel tank liner due to differences in the coefficient of thermal expansion (H, in/in/°F) between concrete and steel is expected to be nonexistent or negligible. For steel, H is approximately 6 x 10-6. For concrete, H is between 5 x 10-6 and 7 x 10-6. The average value for concrete is the same as steel therefore differential growth leading to buckling of the liner would not be expected. Additionally, the concrete shell, because of the reinforcement ratio, would expand as a function of the steel rather than the concrete.

Comment #50

The second paragraph on page 64 states that "hydraulic forces are not of concern for these type tanks located in F-Area since the water table is typically lower than the tanks. Tanks 21-24 in the H-Area are also above the water table". However, the third paragraph on that page states that "For Type IV Waste Tanks, which do not have an annular space, hydraulic forces would be expected on the tank." Resolve this apparent discrepancy.

Phase	Section	Subject
II	*3.4.1*	*TYPE IV WASTE TANKS*

Response

The H Area tanks were constructed on a large concrete pad and then backfilled and compacted with a clay fill. This was not the case in F Area. This method of construction potentially allows an accumulation of perched water on top of the pad that could attain a significant hydrostatic head. Since it has been observed that water can leak into the collection sump in the tank system and, presumably, from there into any crevice between the liner and the concrete walls of the tank, it has been hypothesized that the hydrostatic pressure could build up to the point where it would collapse the liner if the tank were to be empty. The liquid in the tank will equalize the forces inside and outside the liner of the tank and will keep the liner from being damaged.

Comment #51

Discuss why ballast water is needed in these tanks if they are above the water table. If ballast water is indeed required in these tanks when they are out of service for extended periods, discuss why such water would not be needed if the tanks were to be empty for short periods of time.

Phase	Section	Subject
II	*3.4.1*	*TYPE IV WASTE TANKS*

Response

These tanks were constructed on a large concrete pad and then backfilled and compacted with a clay fill. This potentially allows an accumulation of perched water on top of the pad that could attain a significant hydrostatic head. Since it has been observed that water can leak into the collection sump in the tank system and, presumably, from there into any crevice existing between the liner and the concrete walls of the tank, it has been hypothesized that the hydrostatic pressure could build up to the point where it would collapse the liner if the tank were to be empty. The liquid in the tank will keep the liner from being damaged. Additional information on ballast water can be found in Comment 52.

Comment #52

Discuss how the tanks will be emptied during and after waste removal operations if ballast water is required.

Phase	Section	Subject
II	*3.4.1*	*TYPE IV WASTE TANKS*

Response

The concern in the type IV tanks is the groundwater could migrate into the leak detection drainage channels and exert enough upward hydrostatic pressure on the tank bottom to cause the tank to buckle inward (A. Q. Goslen, "Tank 19 Salt Removal," DPSOP-84-17-7, August 1986). The simplest way to protect against this is to put ballast water in the tank that exerts sufficient downward hydrostatic pressure to preclude this threat. Ballast water offers completely passive protection and is the preferred means of protection. The ballast water is inhibited to prevent corrosion of the tank.

There are other methods of protecting against bottom uplift used when a tank must be emptied, such as during waste removal. These methods were used during previous waste removal operations in these tanks. First of all, the groundwater in the area around the tanks is monitored frequently. Experience has shown that the groundwater in the area surrounding the tanks is frequently below the bottom of the tanks. During periods when the groundwater is below the bottom of a tank, the tank can be emptied with no risk of bottom uplift.

Secondly, even when the groundwater is higher than the bottom of the tank, bottom uplift can be prevented by pumping the leak detection sump frequently enough to prevent the sump from filling with water. Bottom uplift can occur only after the sump and drainage channels completely fill with water. Since the liquid level in the leak detection sump is continuously monitored, the high-level alarm will sound well before a hazardous condition exists. Experience has shown that the sumps can be prevented from filling even during periods when the water table is high.

Although the active protection methods outlined above are acceptable for waste removal, SRS favors the passive method of adding ballast for protection during normal tank operations. Whereas the time and duration of waste removal can be controlled, normal tank operations must continue at all times. One can postulate climatic conditions (for example, a hurricane) that could simultaneously raise the water table and also interfere with active protective measures. Waste removal operations would be suspended during this type of condition.

Once the waste is removed from the type IV tanks, plans are to maintain ballast water in them until they are closed. At that point, only residual amounts of material would be left in the tanks, i.e. it would no longer be high-level waste.

Comment #53

Provide details to show how the stainless steel liners for evaporators 242-F and 242-H are connected to the walls. The report does not indicate that this is done in such a way as to prevent leakage at this connection. Also provide this information for the hold tank cell liners for evaporators 242-16F and 242-16H

Phase	Section	Subject
II	*3.5.1*	*EVAPORATORS*

Response

The stainless steel liners for the 242-F and 242-H evaporators were divided during installation into floor panels and wall panels. The floor panels were installed and welded to stainless steel strips that have been anchored into the concrete during construction. The wall panels were flanged at the bottom and welded to the floor panel. The liner was connected to the wall with the use of studs. The studs were then welded to the liner in order to seal them to the liner. The corners of the wall liner were overlapped and welded. Per design, all seams and welds were vacuum tested to verify they were leaktight. The top edge of the liner (~18" above the cell floor) was sealed to the wall with a caulking compound. For more information on this compound see Attachment 1.

The stainless steel liner for the 242-16F and 242-16H overheads hold tank cell were also divided during installation into floor panels and wall panels. Stainless steel strips were anchored into the concrete on the floor, wall, and corners for welding locations once the liner was put into place. After installation, all seams and welds were tested for leak tightness using the Dye Penetrant method. The top edge of the cell is sealed similar to the 242-16F and 242-16H evaporators.

Comment #54

Discuss the size of the gravity drain line from evaporator 242-H to Tank 13, and evaluate the capability/speed of this line to drain a large, rapid release to that tank (i.e., will it prevent overtopping of the 18 inch deep pan).

Phase	Section	Subject
II	*3.5.1*	*EVAPORATORS*

Response

The 242-H evaporator cell contains a sump with liquid level measurement devices that are monitored in the control room. If an abnormal sump level increase occurs during evaporator operation, the evaporator is shutdown (preventing additional waste from entering the cell) and the sump is emptied by an air lift to Tank 13 via a gravity drain line (GDL). The sump also contains an overflow line which ties into this same GDL to allow drainage in the event the lift fails or cannot keep up with the rate of leakage. The GDL is 3" in diameter and the elevation difference between the evaporator and tank is ~16'. This configuration will allow adequate drainage of the evaporator sump without overtopping of the containment pan.

Comment #55

Provide details regarding the design of the concrete berms in all hold tank cells.

Phase	Section	Subject
II	*3.5.1*	*EVAPORATORS*

Response

The berms discussed in connection with the evaporators are not part of the containment system. They are outside of the building and are used to contain and direct the flow of rainwater that might have been contaminated with trace amounts of radioactivity to sumps where it can be sent to treatment before release. They are part of a contamination control program. These berms are formed from cement and may be up to 6" high. They may be moved or replaced as needed for operational purposes.

Comment #56

Page 75 and Figure 3-7 show that the condenser cells drain into the evaporator cells. Discuss whether or not these drain holes are lined to prevent migration of wastes into the concrete. Also provide information to illustrate how these drains and evaporator cell liners are designed to prevent leakage of wastes behind the liners.

Phase	Section	Subject
II	*3.5.1*	*EVAPORATORS*

Response

The line from the condenser cell sump to the evaporator cell is Schedule 40, 304 stainless steel. The condenser cell would have primarily leakage from the condenser water side. The shell side will operate under a slight pressure and there is very little chance that radioactivity would escape. Condensate that has been collected from the condenser has only a few hundred disintegrations per minute/millimeter (dpm/ml) of radioactivity present. This line from the condenser cell to the evaporator cell runs down to the sump at the bottom of the evaporator cell. The sketch (Figure 3-7) does not show this because the line turns and goes out of the plane of view. Because the line runs all the way to the sump, there is no danger of the condensate getting behind the liner.

Comment #57

The report states that, "The transfer lines to and from the CRC for evaporators 242-F and H are not jacketed." Discuss how secondary containment will be provided for these pipes. Also discuss if there are any other waste transfer lines associated with the F and H-Area Tank Farms that do not have secondary containment.

Phase	Section	Subject
II	*3.5.1*	*EVAPORATORS*

Response

Plans are to retire these lines from service at the same time the associated evaporators are retired from service. These systems are scheduled to be retired once the replacement evaporator system (242-25H), which is currently under construction, is put into active service. Since the system will be retired and due to the high radiation exposure associated with the process piping in the surrounding area, secondary containment will not be installed.

The transfer lines to and from the CRC for evaporators 242-F and H are the only lines identified by the professional engineer that do not have secondary containment or are not inspected regularly. However, these lines do have the ability to be hydrostatically tested. It should be noted that the professional engineer did not inspect all the lines associated with the 242-F evaporator system because this evaporator is not currently operated. SRS will provide SCDHEC a secondary containment assessment or integrity assessment for all lines associated with this evaporator system before the evaporator is operated.

Comment #58

Provide details of the secondary containment features of HPP1. Alternatively, state that it is permanently out of service and completely disconnected so that it cannot receive wastes in the future. If HPP1 is permanently out of service, was the unit closed under a plan approved by the State. If not, submit a closure plan for this unit.

Phase	Section	Subject
II	*3.6.1*	*PUMP PITS*

Response

The professional engineer assessed pump pit HPP1 along with the other pump pits (see page 85 of the phase II assessment, eighth line of the last paragraph). The secondary containment features described for pump pits in section 3.6 and the summary statement determining that the pump pits have secondary containment (page 92) apply to HPP1. The phrase "except for HPP1 which is currently empty," (at the bottom of page 85) refers only to the fact that it has no pump tank, i.e. figures 3-8 and 3-9 correctly show the secondary containment features of HPP1. Note that the professional engineer made no exception for HPP1 in his scope statement on page 85 and in his statement about secondary containment determination on page 92. This pump pit has never been in use and will remain as a "spare" until H-Diversion Box 2 and the three other pump pits (HPP2 - 4) are taken out of service. At this point the unit will be closed under a consolidated closure plan.

Comment #59

Demonstrate how it is known that "in-leakage" occurs through joints in the concrete cover slabs only, and not through side or bottom joints or cracks, especially since more infiltration occurs in areas where the water table is "higher". If this cannot be demonstrated, describe the measures that will be implemented to repair the secondary containment.

Phase	Section	Subject
II	*3.7.1.1*	*TYPE I TRANSFER LINES*

Response

The encasements are inspected by lowering an optical instrument through holes drilled through the cover slab. The encasement is then inspected visually by looking through the instrument and by taking photographs through the instrument.

The portions of encasement that have been inspected have been found to be free of cracks. Also, numerous vertical stains appear on the walls of the encasements. This indicates that water has run from the joint (between the cover block and "trough") and down the walls.

The professional engineer who stamped the assessment reviewed photographs of the encasements associated with the type I transfer lines, as noted in his certification statement (Phase II assessment, page 154). He agreed that this evidence was sufficient to conclude that the lines had adequate secondary containment (page 102).

Comment #60

This section states that "Infiltration of groundwater or precipitation into the Type II/IIA transfer lines does not normally occur." Discuss whether or not such infiltration has ever occurred, as well as how it was detected and repaired.

Phase	Section	Subject
II	*3.7.2.1*	*TYPE II/IIA TRANSFER LINES*

Response

A review of incidents since September 1957 revealed none in which water infiltrated into the secondary pipe of an operating Type II/IIA transfer line. Instances of minimal infiltration have occurred during maintenance where portions of secondary containment pipes were opened and exposed to rainfall or groundwater. However, during maintenance, strict controls are in place to prevent waste from reaching the lines, to prevent environmental contamination and also to prevent exposure to personnel working on the lines.

Comment #61

Demonstrate that all rubber ring seals, which are known to deteriorate in radiation fields, are still liquid-tight and will remain so throughout the remaining active lives of these pipes.

Phase	Section	Subject
II	*3.7.3.1*	*TYPE III/IIIA TRANSFER LINES*

Response

The use of the rubber seal rings is restricted to lines that carry liquids that have relatively low radiation levels because the deterioration of the rings was discovered early in SRS operations. Any leaks would likely be detected by the intrusion of groundwater into the secondary containment jacket.

Comment #62

Demonstrate that the unlined diversion boxes (FDB1, HDB1 AND HDB3) will not allow migration of wastes into or through the concrete, as well as through any construction joints, gaps or cracks. Section 4.8.2 indicates that these unlined DB's are coated with water proofing compounds, but no mention of such compounds is made here. Resolve this discrepancy.

Phase	Section	Subject
II	*3.8.1*	*DIVERSION BOXES*

Response

It is, of course, impossible to demonstrate that the unlined diversion boxes will never leak under any condition at any time as the statement implies. However, there has been no indication of leakage from these boxes over the 30-40 years that they have been in service as evidenced by the samples taken from monitoring wells that are located in the areas. Certainly it is unlikely that waste could migrate through the very thick (1'6" minimum) concrete walls of the boxes. Liquid waste is not allowed to accumulate in the boxes although it is impossible to completely remove all liquid from the boxes. This is because the steam jets normally used for the liquid removal operations cannot be set low enough to remove all of the liquid. Although the remaining amount is small, (no significant hydraulic head) there is always a heel left after a removal operation. Usually the only liquid present in these boxes is the result of rainwater inleakage and usually contains very little radioactivity.

Although the unlined diversion boxes are coated with a water proofing compound, credit for this has not been taken because the coating cannot be repaired if it deteriorates in use. This is because the radiation levels in the box would cause extensive exposure. Recoating would require complete removal of the old coating, cleaning of the surfaces and installation of a new coating.

Comment #63

Demonstrate that the lined structures provide liquid- tight secondary containment in accordance with Section C of Appendix B of the FFA. This appears especially important in light of the many pipe penetrations through the walls of these structures, and due to the comment made in Section 3.7.1.5 of the report regarding the discontinuity of secondary containment at pipe-to-box interfaces.

Phase	Section	Subject
II	*3.8.1*	*DIVERSION BOXES*

Response

There are two types of diversion boxes - those that have stainless steel liners and those that do not. In the case of the lined boxes, the entering lines have metallic secondary containment and their secondary containment lines are welded to the box liners. In the case of the unlined boxes, if the entering lines have a steel secondary containment, the secondary containment is seal welded to a steel plate set into the exterior of the box. In all cases, there is a method of leak detection in the diversion box. Thus, the requirement for secondary containment is met.

Comment #64

Provide design details about the drain line from FDB1 to the F-Area catch tank, including how the pipe is sealed to the DB and catch tank to prevent leakage at these joints.

Phase	Section	Subject
II	*3.8.1*	*DIVERSION BOXES*

Response

The line from FDB1 to the catch tank is a Type I line i.e., it is enclosed in a covered concrete trench secondary containment. It appears from the drawings made in 1952 that the lines penetrate the walls at both ends while the trough is sealed to the box walls with concrete and mastic. At the lower (catch tank) end there is a sealed drain line that comes out of the bottom of the trench and runs directly into the catch tank.

Comment #65

Page 121 states that "Water stops seem to have been included in all of the construction joints." Provide details to support this conclusion.

Phase	Section	Subject
II	*3.8.1*	*DIVERSION BOXES*

Response

The professional engineer who reviewed the tank farms' secondary containment was presented with the difficult task of determining the design features that were common to all diversion boxes. The diversion boxes were constructed over approximately a 30-year period, spanning many construction codes, design standards, and drafting standards. Furthermore, unlike the waste tanks (which were built to five standard designs -- I, II, III, IIIA, and IV) each diversion box is unique.

Many of the drawings of the diversion boxes show water stops, others do not. However, the professional engineer found that the accepted construction practice was to install water stops in all cases. This conclusion was supported by the fact that no evidence of inleakage has been detected in any of the diversion boxes, even though other structures nearby showed evidence of inleakage (such as the concrete encasements of the type I transfer lines).

Based on this information, the professional engineer made the cautious observation, "Water stops seem to have been included in all of the construction joints."

It should also be noted that the boxes should not be subjected to significant hydrostatic pressure, because procedures require that liquids be removed promptly in the event of a leak. Each diversion box has leak detection that can sense the presence of accumulated liquid. Based on groundwater monitoring, there is no evidence that any of the diversion boxes have ever leaked contamination to the environment.

Comment #66

This section states that "Five of the eight tanks are essentially empty (except for ballast water)", while Attachment A shows them all to contain LHW, salt cake or sludge. Resolve this discrepancy.

Phase	Section	Subject
II	*4.4.5*	*TYPE IV WASTE TANKS*

Response

In Attachment A of the Phase II Tank Assessment, note that the "Current Usage" column notations for tanks 17, 18, 19, 20, 24 contain some variation on the statement, "Inactive... residual LHW remains." The professional engineer considered tanks in which only residual waste remained to be "essentially empty," i.e. the threat posed by leakage from these tanks is small because the quantity of contamination in the tanks is small. The tanks do contain ballast water, which alone is not considered a waste. Ballast water may either be low heat waste or clean water that is added to the waste tank. If fresh water is used, it is then designated as LHW. While a majority of the waste has been removed from these tanks, they are still in service and are sitting inactive pending waste removal operations.

Comment #67

Discuss the potential for not yet discovered leaks below the waste levels in these tanks, and their impacts during waste removal operations.

Phase	Section	Subject
II	*4.4.5*	*TYPE IV WASTE TANKS*

Response

As discussed in the response to Comment #29, the potential for undiscovered leaks is low because the evidence suggests that leakage will be detected by the leak detection system. In the unlikely event that a leak occurred, such a leak, because of its high mobility, would be detected first by the tanks' leak detection system or by monitoring wells in the vicinity of the tank.

Nevertheless, waste removal from the tanks poses only a marginal additional threat to the environment (relative to storage in these tanks), for the following reasons:

- Inhibitors have been maintained in these tanks at sufficient levels to inhibit stress corrosion cracking for over 15 years. The probability that a new leak has occurred within the last few years, or that one will occur during waste removal, is low. Inhibitors will be maintained during waste removal and also in any ballast water that is maintained in the tank after waste removal.

- The times between water addition and pump out during waste removal are small (typically weeks) compared with the times that waste has been stored in the tanks (years).

- As previously discussed, the hydraulic pressures during waste removal will be less than what these tanks have already experienced.

Comment #68

Provide details regarding the design of the manholes in the gravity drain line from evaporator 242-H to the F/H ETF process sewer. This should include details about the connection of pipes to the manholes to ensure liquid-tight seals. Provide similar information for all other manholes in any transfer lines and IALs.

Phase	Section	Subject
II	*4.5.5*	*EVAPORATORS*

Response

The manhole in the line from the 242-H evaporator to the ETF is not covered by this permit. It was previously permitted in the F/H ETF process sewer line construction permit (SCDHEC Permit #13105).

Comment #69

Section 3.7.1.5 states that "As with many waste transfer lines, the secondary containment terminates at the outer surface of the concrete wall of the boxes, risers, or similar containment structures penetrated by primary lines." Therefore, it appears that many waste transfer lines do not have liquid tight secondary containment. Describe the measures that will be implemented to identify and repair these deficiencies in the the secondary containment systems for all transfer pipes.

Phase	Section	Subject
II	*3.7.1.6*	*TYPE I TRANSFER LINES*
II	*3.7.2.6*	*TYPE II/IIA TRANSFER LINES*
II	*3.7.3.6*	*TYPE III/IIIA TRANSFER LINES*
II	*3.7.4.6*	*TYPE IV TRANSFER LINES*

Response

The PE that performed the assessment was aware that the secondary pipe on some lines do not penetrate the walls of diversion boxes and pump pits, as shown by the statement on page 101 of the Phase II assessment. However, he judged that the risk of leakage within the wall was small and did not consider this significant in determining secondary containment. He concluded that the transfer lines satisfied the FFA criteria for secondary containment.

Comment #70

Discuss what methods have been used to determine if cracks or gaps are present in the concrete structure surrounding the tank and containment pan. Also discuss the size and locations of any such cracks that have been found, and their potential for allowing waste migration through them.

Phase	Section	Subject
II	*3.1.6*	*TYPE I WASTE TANKS*

Response

The concrete structure surrounding the type I and II waste tanks, the annulus pans, and the concrete domes of the type IV tanks can be inspected photographically. Many of the photographs taken of the tank primaries also show large portions of these structures. Any unusual conditions (cracks would be considered an unusual condition) are noted in the inspection records.

No cracks, spalling, or evidence of deterioration have been observed in the concrete structures of any of the type I, II or IV tanks (including tanks 2 through 8), nor have any cracks been observed in the annulus pans of any of the tanks. Note that the inspection technique is subject to similar limitations as the inspection technique for the tank primaries: 1) cannot inspect the portions of the concrete structure that are covered by the annulus pan, including the bottom; 2) cannot inspect the portions of the annulus pan underneath the primary tank or beneath some obstruction, such as ventilation ducts and dried salt deposits (there are no deposits in tanks 2 through 8) and 3) 100% of the concrete wall and annulus pan wall cannot be viewed for all waste tanks because of limited inspection risers.

Comment #71

Demonstrate that the seal between the top of the containment pan and the adjacent concrete wall will not provide a release pathway if the pan is overtopped. (Based on information provided, this appears to have been a factor for Tank 16.)

Phase	Section	Subject
II	*3.1.6*	*TYPE I WASTE TANKS*

Response

While it's true that leakage near the top of the annulus pan is a likely route for migration from tank 16, a type II tank, this likely route does not exist for the type I tanks. The type II tanks have a construction joint without a water stop at the level of the top of the annulus pan (see Figure 3-2 of the Phase II Assessment). The report on tank 16 states, "In summary, it appears most likely that leakage from this tank was through the construction joint located at the level of the top of the steel annulus pan. This joint probably weeped from several locations when placed under the hydrostatic head resulting from the overfill of the annulus pan." (W. L. Poe, "Leakage From Waste Tank 16; Amount, Fate, and Impact," DP-1358, November 1974)

The type I tanks do not have a similar joint. The side walls of the tanks were continuously poured (See Figure 3-1 of the Phase II Assessment). Note that the entire vault has only two construction joints, at the top and bottom of the walls, and each of these is provided with a 16 oz. copper water stop. Thus the most probable path for leakage from tank 16 does not exist on the type I tanks.

Comment #72

Discuss the waste removal capabilities (i.e., pumping rates, availability of alternative waste storage space, etc.) in the event of a catastrophic failure of these tanks at all times during future operations.

Phase	Section	Subject
II	*3.1.6*	*TYPE I WASTE TANKS*

Response

The maximum expected ~~leak~~ rate from these tanks is less than 4 gpm. Permanently installed jets are in place in each tank annulus with a capacity of at least 75 gpm (See the response to Comment #15 for more details)

SRS procedures require that emergency storage capacity be available sufficient to contain the full contents of the largest tank (i.e. 1.3 million gallons). The purpose of this requirement is primarily to provide emergency space for a leaking tank.

Comment #73

Discuss how it can be concluded that Tank 2 through 8 have no cracks and are not leaking when it is stated in Appendix D that 100% of the primary tank sidewall cannot be viewed or photographed.

Phase	Section	Subject
II	*3.1.6*	*TYPE I WASTE TANKS*
-	*COVER LETTER*	*ALL TANKS*

Response

No leaks have been detected in tanks 2-8, either by leak detection, which has been in place since the tanks were put into service, or through photographic inspections, which have routinely observed all of the visible portions of the tank exterior. The inspection photographs also demonstrate that the portions of the tanks that are visible are in good condition. The Annual Tank Inspection Report, which contains further details, is provided as Attachment 2.

However, as is noted in the assessments, some portions of the tanks are not visible and cannot be inspected. During negotiation of the FFA, this fact was recognized by the parties negotiating the agreement, which is why the draft FFA requires SRS to document the limitations of integrity examination techniques and have such documentation certified by a registered professional engineer (FFA, Appendix B, paragraph A.5). SRS fulfilled this requirement in Attachment D to the Phase II Assessment.

The SRS program of inspections, leak detection, chemistry controls and other protective measures to inhibit leakage is protective of the environment. The only known release from a tank to the soil (tank 16) occurred at a time when many of the current requirements for inhibiting leakage were not in place. While there is a possibility that small leaks on the tank bottom or walls may not be detected since the annulus ventilation system would evaporate any liquid present, these small leaks do not threaten the environment because the waste is immobile. SRS knows of no inspection or leak detection technology that could be applied to these existing tanks that would assure detection of all leaks, no matter how small.

Comment #74

Section 3.8.5 states that the unlined DB's (and apparently FDB2) allow "inleakage of groundwater and precipitation." That is, they leak. Provide additional evidence to support the conclusion that such DB's meet the requirements of secondary containment as outlined in the FFA.

Phase	Section	Subject
II	*3.8.6*	*DIVERSION BOXES*

Response

In order to clarify this statement, please see Attachment 3 which contains a letter from Rich Stegen, the certifying PE.

Comment #75

Another concern of this office is the use of Tank 13 (Type II Tank) on a continuous basis as an evaporator feed tank with predominately liquid contents. This tank has documented leaks which will undoubtedly become more active when operations begin. Adding to the concern is the fact that this particular type of tank, specifically Tank 16, has documented leaks which were not contained and impacted the surrounding soils.

Phase	Section	Subject
-	*COVER LETTER*	*TANK 13*

Response

Operation of Tank 13 will not reactivate the existing known leak sites. No leakage has been observed in this tank for over ten years, and none is expected because 1) the liquid level will be maintained below the known leak sites, and 2) inhibitors will be maintained in the tank to inhibit further stress corrosion cracking.

As noted on page 47 of the Phase II Assessment, the waste in Tank 13 is kept below known leak sites. Tank 13, has two known leak sites, one at 269 inches and one at 279 inches. The tank's operating limit is 259 inches, ten inches below the lowest known leak site. Tank 13 currently contains a total of 251.9 inches of supernate plus sludge ("Waste Management Morning Report," 2 September 1992) with an estimated 115 inches of sludge (WSRC-RP-92-78-7B, "High-Level Waste Management Engineering Data Record," July 1992).

Even in the unlikely event that the tank leaked, the possibility that leakage would migrate to the soil is remote. A number of protective measures have been put in place since the tank 16 leak that significantly reduce the potential for a leak to breach the secondary containment. These protective measures are discussed in more detail in the response to Comment #15.

Comment #76

To determine if these tanks can be used for emergency waste receipt and storage, please provide additional information including:

- ***current quantities of wastes in the tanks,***
- ***the schedule for removing the existing tank wastes,***
- ***the potential for future cracking of these tanks if their waste levels are increased,***
- ***the ability of the leak detection and removal systems to prevent overtopping of the containment pan, and***
- ***what are the potential scenarios that would constitute an emergency to warrant the use of these tanks.***

Phase	Section	Subject
-	*COVER LETTER*	*TANKS 2 - 8*

Response

The current quantities of waste in tanks 2-8 as of 31 July 1992 are as follows:

WASTE VOLUMES IN THOUSANDS OF GALLONS*

Tank	Total**	Sludge***	Salt***
2	544	4	525
3	553	4	548
4	549	127	34
5	54	54	--
6	22	22	--
7	394	221	--
8	172	163	--

* Remaining volumes consist of Supernate

** Total waste volume as measured by reel tape

*** Volumes of solid phases are measured by periodic manual soundings

SCHEDULE FOR WASTE REMOVAL The schedule for waste removal operations from all tanks is currently being evaluated. A presentation on the waste removal schedule will be provided to DHEC at a later date.

POTENTIAL FOR FUTURE CRACKING OF THESE TANKS The potential for future cracking of these tanks is small as long as current controls are maintained.

As described in Attachment C of the Phase II Assessment, the cracking in tanks 1, 9, 10, 11, 12, 13, 14, 15, and 16 was caused by stress corrosion cracking. "Nitrate stress corrosion cracking (SCC) in mild carbon steel is caused by a combination of high stresses in the steel and the exposure of the steel to an aggressive nitrate (NO3) environment that is enhanced as the temperature increases... the elimination of any one factor (stress, corrosive environment, or temperature) would significantly reduce the corrosion potential." (Phase II Assessment, Attachment C, first page).

In tanks 2-8 (as in all waste tanks) the factor of corrosive environment is eliminated by controlling the chemical concentration of the waste (See the table on the last page of Attachment C, entitled "Stress-Corrosion Limits"). Although tanks 2-8 have previously held wastes that were outside of these limits, these limits have been maintained since the middle-1970s, with no observed cracking. The potential for future cracking is low.

Regarding the concern about increasing stress as the tanks are filled: The stresses in tanks 2-8 are caused primary by welding stress, which can reach the yield stress of the steel. (Phase II Assessment, Attachment C, top of third page). The contribution to stress from increased waste levels ("working stress") is significantly less (second page). Furthermore, each of these tanks has already experienced levels near its fill limit, with no observed cracking.

THE ABILITY TO PREVENT OVERTOPPING OF THE CONTAINMENT PAN. Each of the tanks has an installed annulus jet that has a capacity far in excess of the maximum leak ever observed at SRS. See the answer to Comment #15 for more details.

EMERGENCIES THAT MIGHT WARRANT USE OF THE TANKS. The tanks would be used for emergencies in which an unexpected volume of liquid waste suddenly needed to be handled, for example:

1. A leak or other unplanned event that would require emptying a high-level waste tank.

2. An accident from some other facility at SRS, such as the canyons or the reactors, that would create a large quantity of contaminated waste. An example would be the tritiated water generated in the K-reactor incident in December 1991.

Comment #77

According to Paragraph IX.E.1 of the FFA, leaking units or ones that do not have adequate secondary containment require plans and schedules to remove them from service or to provide adequate secondary containment. Also, the FFA requires that the report contain proposed methods and a schedule for ongoing demonstrations that the tanks system(s) are not leaking. These plans and schedules were not contained in this report. Therefore, submit the appropriate plans and schedules.

Phase	Section	Subject
II	*COVER LETTER*	*WASTE REMOVAL SCHEDULES*

Response

The schedule for waste removal operations from all tanks is currently being evaluated. A presentation on the waste removal schedule will be provided to DHEC at a later date.

As a method of ongoing demonstrations that the tank systems are not leaking, SRS proposes the Annual Tank Inspection Report (Attachment 2). SRS will provide this report to SCDHEC annually. If there are any questions about determinations made in the report, the inspection photographs are available for review.

Comment #78

The report did not contain a discussion of any contingency plans or emergency procedures that are in place or will be in place during tank farm operations. A discussion of these plans and procedures should be submitted.

Phase	Section	Subject
II	*COVER LETTER*	*CONTINGENCY PLANS*

Response

SRS has a number of emergency plans and procedures in place to respond to various unusual or emergency situations.

For example, the plans for responding to a leaking tank have already been discussed in previous responses. In summary:

- Procedures require that 1.3 million gallons of emergency space be reserved for emergency transfers.

- Procedures require that each tank and annulus has permanently installed pumping capacity, either a jet or a pump, for pumping the waste in the event of a leak.

Similar emergency plans exist for responding to other emergencies or unusual situations, for example, loss of annulus ventilation, loss of primary ventilation, and responses to natural events such as freezing temperatures, heavy rains and high winds.

SRS also has an Emergency Response Organization for responding to significant emergencies throughout SRS, including the tank farms. Key personnel from the tank farms are part of this organization and are continuously on call to respond to emergencies. SRS procedures require notifying SCDHEC of emergencies that exceed specified threshold criteria.

Operating procedures will be available for DHEC review at the Final Inspection.

after back

Attachment 1

Vendor Information on Epoxy Coating Used in ITP Filtrate Hold Tank Area.

Westinghouse
Savannah River Company

P.O. Box 616
Aiken, SC 29802

#1787

NPD-WMT-900940

October 15, 1990

R. L. Stegen
Chas. T. Main, Inc.
4701 Hedgemore Dr.
Charlotte, NC 28209

Mr. Stegen:

EWR 863190 - F & H AREA TANK FARM PERMITTING
TANK ASSESSMENT REPORT - ITP HOLD TANK AREA LINER

Specifications for the proposed liner and grout materials are attached for your use in the Tank Assessment Report for the Tank Farm. Flakeline 222G would be used to seal the grout. Flakeline 600 will provide the finished liner coat. These materials will be applied with the appropriate primers.

If there are any questions, please call me at 803-557-8843.

Sincerely,

Jeff Pike
Engineer, Waste Management Technology

CC: J. J. Scherpenberg, 707-H
G. H. Street, 703-H
P. D. d'Entremont, 703-H
B. L. Lewis, 703-H
T. P. Gaughan, 241-120H
R. E. Walker, BTC-B14-054, N. Augusta
WMT Files, 703-H
File Code: 175.15

MASTERFLOW® 928 GROUT

High-precision, nonshrink, natural-aggregate grout

DESCRIPTION:

MASTERFLOW 928 grout is specially formulated for use at any consistency—from fluid to damp-pack—for grouting machines or plates requiring precision-bearing support. This ready-to-use product meets the volume change and exceeds the compressive strength requirements of CRD-C 621, Corps of Engineers Specification for Nonshrink Grout.

RECOMMENDED FOR:

- Precision grouting of equipment and machinery, baseplates, soleplates and columns.
- Grouting applications where shrinkage must be eliminated and where a high-strength grout, similar in appearance to concrete and mortar, is desired.
- Applications where high, one-day and later-age compressive strengths are required.
- Nonshrink grouting of precast wall panels, beams and columns, curtain walls, concrete systems, and other structural and nonstructural building members.
- Repairs to concrete, such as filling rock pockets and large cracks.
- Anchoring bolts, reinforcing bars and rods.
- Applications calling for a grout to be pumped.

FEATURES/ BENEFITS:

- Hardens free of bleeding, settlement or shrinkage when mixed, placed and cured at almost any consistency—fluid (25 seconds or more), flowable, plastic or damp-pack.
- Exhibits workability greater than previously seen with other grouts at a given flow consistency—when in the 100°F (38°C) range, MASTERFLOW 928 grout maintains good workability for more than 30 minutes.
- Can be used at temperatures ranging from over 100°F (38°C) to as low as 40°F (4°C) when mixing and placing recommendations are followed.
- Contains carefully graded, high-quality quartz aggregate for optimum strength and workability.

PACKAGING:

MASTERFLOW 928 grout is packaged in 55 lb (25 kg) moisture-resistant bags.

ESTIMATING:

One 55 lb (25 kg) bag of MASTERFLOW 928 grout mixed with 10.5 lb (4.8 kg) [1.26 U.S. gallon (4.8 litre)] of water produces approximately 0.50 ft³ (0.014 m³) of grout.

NOTE: MASTERFLOW 928 grout should be mixed with a mechanical mixer for at least 5 to 6 minutes. More or less water may be required when mixing to a 25 second flow. The amount of water needed depends on mixing efficiency and other variables.

TYPICAL COMPRESSIVE STRENGTHS:

	CONSISTENCY					
	Plastic[1]		Flowable[2]		Fluid[3]	
	psi	MPa	psi	MPa	psi	MPa
1-day	3,500	24	3,000	21	2,500	17
3-day	6,000	41	5,500	38	4,500	31
7-day	7,000	48	6,200	43	6,000	41
28-day	8,500	59	7,500	52	7,000	48

[1] 100% flow on flow table, ASTM C 230, 5 drops in 3 seconds.
[2] 135% flow on flow table, ASTM C 230, 5 drops in 3 seconds.
[3] 25 to 30 second flow by corps of Engineers Flow cone Method, CRD-C 611.

NOTE: The data shown are based on controlled laboratory tests. Reasonable variations from the results shown above can be expected. Field and laboratory tests should be controlled on the basis of the desired placing consistency rather than strictly on the water content. However, it is recommended that the flow should not be less than 25 seconds, Flow Cone Method, CRD-C 611.

If the work requires that strength tests be made at the jobsite, use 2" (50 mm) cube molds. Do not use cylinder molds. Consult your local Master Builders representative for special procedures required when mixing and casting cubes of fluid, nonshrink grout for compressive strength tests.

PRECAUTIONS:

- When the placing temperature of the mixed grout is below 50°F (10°C) or if the environment into which the mixed grout is to be placed is below 50°F (10°C), MASTERFLOW 928 grout should not be mixed with more than 10.5 lb (4.8 kg) [1.26 U.S. gallon (4.8 litre)] of water per 55 lb (25 kg) bag of dry grout.
- The mixed temperature of the grout should be in the range of 40°F to 100°F (4°C to 38°C).

  Do not use water in an amount or at a temperature that will produce a flow of less than 25 seconds (CRD-C 611) or cause the mixed grout to bleed or segregate. Special information on high and low temperature grouting techniques is available from your local Master Builders representative.
- When the grout will be in contact with steel which is or will be stressed over 80 000 psi (552 MPa) use Masterflow® 814 or 816 cable grout.

NOTE: For even greater impact resistance—a desirable property in grout subjected to severe, dynamic operating forces and repetitive loading—use metallic-reinforced, non-catalyzed Embeco® 885 or Embeco® 636 grout. Applications which would require such resistance include crane rail plates, heavy presses and steel and aluminum rolling mills.

FLAKELINE® 222G

Catalyzed graphite filled vinyl ester coating

GENERIC TYPE:

Catalyzed vinyl ester resin system with graphite filler.

DESCRIPTION:

CeilGard FLAKELINE 222G is a graphite filler catalyzed vinyl ester system which exhibits excellent resistance to both aliphatic and aromatic organic solvents, organic and inorganic acids. It shows partially good resistance to hydrofluoric acid.

RECOMMENDED USES:

Intermediate lining for use in immersion conditions up to 130°F (54°C) where severe corrosive environments exist.

USE IN CONJUNCTION WITH:

Used with P-370 Primer for metal surfaces.

SURFACE:

All metal surfaces with proper surface preparation.

RESISTANCE:

Outstanding solvent resistance, organic and inorganic acid resistance, excellent resistance to various concentrations of hydrofluoric acid.

PROPERTIES OF CURED FILM:

Tensile Bond Strength—500-2,000 psi (3.4-14 MPa)
Flexural Strength—3,500-4,000 psi (24-28 MPa) (ASTM-D790)
Flexural Modulus—0.5-0.7 × 10^6 psi (3.5-4.8 GPa)
Moisture Permeability—0.002 perm in. (0.005 Perm cm.) (ASTM E96 Proc. E)
Tensile Strength—2,500-3,500 psi (17-24 MPA) (ASTM D-638)
Tensile Elongation—0.3-0.5%

PRODUCT DATA:

Color—Dark Gray
Density (wt. per gal.)—10.0 ± 0.2 lbs/gal
Viscosity—3,500-4,000 cps @ 77°F
Flash Point (Pensky Martens Closed Cup)—89°F (32°C)
V.O.C. (Volatile Organic Compounds)—0.12 lbs/gal (Lab 23 method of Reg. 8-4-111 of California Code)
Shelf Life—Shelf life is 2 months at 70-80°F; 30 days or less at 80-90°F. Expiration dates printed on labels.
Pot Life—100 min. @ 50°F, 60 min. @ 75°F, 45 min. @ 90°F
Temperature Resistance—350°F continuous dry; 130°F immersion

SURFACE PREPARATION:

For immersion or intermittent splash and spillage conditions sandblast to "White Metal" in accordance with Steel Structures Printing Council Specifications SP-5-63 or NACE Specifications #1. For fumes and dry environments sandblast to "near white" in accordance with SP-10-63 or NACE #2. Minimum surface profile of 3.0 mils is required.

APPLICATION:

Spray application is recommended. Small areas may be coated by brush or roller.

NUMBER OF COATS AND THICKNESS:

Two coats at 20-26 wet mils each will yield total DFT of 30-40 mils.

COVERAGE:

Actual coverage is 25-30 ft²/gal. @ 35 mils which includes approximately 20% loss due to waste and overspray.

THINNING:

None required. DO NOT THIN.

RECOAT & CURING TIME:

	Recoat Time	Cure Time
@ 50°F	12 hrs.	48 hrs.
@ 75°F	4 hrs.	24 hrs.
@ 90°F	3 hrs.	16 hrs.

RECOATABILITY:

FLAKELINE 222G must be recoated within 7 days when shaded from sunlight. If the coating is applied in sunlight (even on cloudy days) it must be recoated within 4 hours to obtain proper intercoat adhesion.

MIXING:

Stir thoroughly, then add 3.0 oz. of Hardener No. 2C per gal. of 222G liquid.

APPLICATION EQUIPMENT:

Use air spray or low pressure (4:1 or 8:1) pump. Airless spray equipment is normally not recommended. When rolling or brushing three coats will be required to achieve recommended film thicknesses. For complete details refer to Bulletin CG200 and Bulletin C-20 (refers to Flakeline 222HT/222G).

CLEAN UP:

Use T-410 Solvent, methyl ethyl ketone or lacquer thinner. DO NOT USE ACETONE SOLVENT.

PACKAGING:

Available in 3/4 gallon and 4 gallon units. Hardener (catalyst) is included in the material price with approx. 3.0 oz. of hardener per gallon of material in separate containers.

STORAGE:

Store in a cool, dry place away from fire hazards.

Due to the limited shelf life Master Builders will not warranty the shelf life of FLAKELINE 222G and will not accept return of this material.

SAFETY:

FLAKELINE 222G contains vinyl ester resins, styrene monomer and inert flake glass filler. The hardener is an organic peroxide. The product's components have been formulated to optimize physical lining characterics while minimizing hazardous physical and health factors encountered during application. A concerned effort is made to be aware of the latest chemical toxicological information and to apply this knowledge in a responsible manner to insure product safety.

During application of FLAKELINE 222G materials, always wear gloves and appropriate work clothing to minimize contact. Ventilation is required with special consideration for enclosed or confined area. Air movement must be designed to insure turnover at all locations in work area and adjacent areas to avoid buildup of heavy vapors. Use caution when handling flammable liquids, eliminate sources of ignition from work area, and containers with residues.

Observe safe storage practices by separating resins from hardeners, by keeping solvents and hardeners in a cool area free of sources of ignitions, and by observing a special warning on RED and YELLOW labeled products. The RED labels represent amine-type chemicals and the YELLOW labels represent organic peroxide-type chemical which should not be stored adjacent or mixed together because of the possible violent reaction between them.

Product Material Safety Data Sheets and Installation Bulletins are available and should be consulted when handling products. These products are for industrial and professional use only; application directions must be followed.

Master Builders
23700 Chagrin Blvd
Cleveland, OH 44122
3637 Weston Rd
Toronto, ONT M9L 1W1

©1989, Master Builders

FLAKELINE® 600

Amine adduct cured epoxy

DESCRIPTION:

FLAKELINE 600 is a two-component, high build (6-8 mils/coat) flake filled epoxy topcoat providing improved chemical resistance to alkalis, inorganic acids and many aromatic and aliphatic solvents. Unique curing systems allow application at temperatures well below freezing.

RECOMMENDED USES:

For corrosion protection in chemical fumes, spillage or marine environments. Recommended for structural steel, piping, tanks or equipment in chemical, paper, marine and petroleum facilities. May also be used as a light duty lining in water or mild chemical solutions at ambient temperatures.

USE IN CONJUNCTION WITH:

Used with Flakeprime 675 Epoxy Primer.

GENERIC TYPE

Amine adduct epoxy

SURFACE:

Apply over Flakeprime 675. May be used as self-priming single coat system in mild to moderate corrosive atmospheres.

RESISTANCE:

Resistant to alkalis, inorganic acids, chemical fumes, solvents and fresh and salt water immersion.

PRODUCT DATA:

Colors—White and gray. Other standard colors available.
Density (wt per gal)—10.3 ±0.02 lbs
Solids Content—83% by volume
Viscosity—700 ± 200 cps mixed @ 77°F
Flash Point (Pensky-Martens Closed Cup)—Part A–35°F (2°C); Part B–210°F (99°C); Mixed–61°F (16°C)
Shelf Life—1 year at temperatures below 90°F
Pot Life—8 hrs @ 25°F, 3 hrs @ 50°F, 2 hrs @ 75°F, 45 min @ 90°F
Temperature Resistance—350°F continuous dry; 120°F immersion, 160°F splash and spillage.

SURFACE PREPARATION:

Metal—For immersion or intermittent splash and spillage conditions sandblast to "White Metal" in accordance with Steel Structures Painting Council Specifications SP-5-63 or NACE Specification #1. For fumes and dry environments sandblast to "Near White" in accordance with SP-10-63 or NACE #2. A minimum surface profile of 3.0 mils is required.

Concrete—Previously coated or heavily contaminated surfaces should be sandblasted to provide a clean surface. New or uncontaminated horizontal surfaces may be prepared by etching with 1 part hydrocholoric acid to 2-3 parts water instead of sandblasting.

APPLICATION:

Airless, conventional, brush or roller.

NUMBER OF COATS AND THICKNESS:

One coat at 6 dry mils for chemical fumes or weathering. For direct spillage or immersion apply two coats at 6-8 mils per coat.

COVERAGE:

Theoretical coverage is 1,330 ft²/gal @ 1 mil DFT.

THINNING:

Generally not required. May use up to 4 oz of T-470 Solvent per gallon at temperatures below 70°F. Use T-460 solvent at temperatures above 70°F.

RECOAT & CURING TIME:

	Recoat Time	Cure Time
@ 25°F	48 hrs.	48-72 hrs.
@ 50°F	15 hrs.	18-24 hrs.
@ 75°F	4 hrs.	6-12 hrs.
@ 90°F	3 hrs.	4 hrs.

May be recoated up to 30 days. After 30 days, sand or sweep blast to remove gloss and roughen surface to proper adhesion.

MIXING:

Add Catalyst Part B into Resin Part A and mix thoroughly with mechanical agitation. Material will become much thinner when mixed. Add minimum quantities of solvent only if required. OBSERVE POT LIFE LIMITATIONS. If material thickens in pot, discard material and flush pot and lines.

APPLICATION EQUIPMENT:

AIR SPRAY—Use Binks 18 or 62 spray gun; minimum 3/8", I.D. fluid line with #66 (.070) fluid tip and needle with 63PJ or #63PB air caps. For high production spraying substitute #67 (.086) fluid tip and needle with 67PD air cap. Adjust fluid pressure to provide adequate material to spray gun and use minimum atomization pressure to break up and flow out with minimum overspray.

AIRLESS SPRAY—Minimum 28:1 ratio pump with 60 mesh filter recommended. A Spraying Systems 25-A Gunjet spray gun with Rotoclean tip and tungsten carbide orifices of 0.017-0.026"; and 25-60° fan angle is recommended. Adjust material pressure between 1,200-2,500 psi as required.

CLEAN UP:

Use T-410 Solvent, methyl ethyl ketone or lacquer thinner.

PACKAGING:

Available in 1 gal and 5 gal units.

STORAGE:

Store in a cool, dry place away from fire hazards.

SAFETY:

FLAKELINE 600 contains epoxy resins, polyamide catalyst and aromatic solvent. The product's components have been formulated to optimize physical characteristics such as filling capacity, abrasion, moisture and chemical resistance while minimizing hazardous physical and health factors encountered during application. A concerned effort is made to be aware of the latest chemical toxicological information and to apply this knowledge in a responsible manner to insure product safety.

During application of FLAKELINE 600 materials always wear gloves and appropriate work clothing to minimize contact. Ventilation is required with special consideration for enclosed or confined area. Air movement must be designed to insure turnover at all locations in work area and adjacent areas to avoid buildup of heavy vapors. Use caution when handling flammable liquids, eliminate sources of ignition from work area, and containers with residues.

Observe safe storage practices by separating resins from hardeners, by keeping solvents in a cool area free of sources of ignitions.

Product Material Safety Data Sheets and Installation Bulletins are available and should be consulted when handling products. These products are for industrial and professional use only; application directions must be followed.

Master Builders
23700 Chagrin Blvd
Cleveland, OH 44122
3637 Weston Rd
Toronto, ONT M9L 1W1

Attachment 2

Annual Tank Inspection Report

Attachment 3

Letter From Rich Stegen Concerning Diversion Boxes

PARSONS

6120 South Gilmore Road
Fairfield Executive Center
Fairfield, OH 45014
(513) 870-0300
FAX (513) 870-0444

September 18, 1992

Doc. Control No.: 10LO09189202

Mr. Jeff Pike
Waste Management Technology
Westinghouse Savannah River Company
Building 703-H, Room 131
Aiken, South Carolina 29803

Subject: Assessment Report Phase II for the F and H-Area High-Level Radioactive Waste Tank Farms

Dear Jeff,

I have reviewed the statements made in Section 3.8 of the Assessment Report Phase II regarding the diversion boxes and believe that all of the statements are adequate. I still support the conclusion that both the lined and unlined diversion boxes meet all of the FFA requirements for secondary containment. The rationale for supporting this conclusion with respect to the individual FFA secondary containment requirements for ancillary equipment is described below.

As ancillary equipment, secondary containment systems for the diversion boxes must be:

1) *Constructed of or lined with materials that are compatible with the hazardous or radioactive substance(s) to be placed in the tank system, and shall have sufficient strength and thickness to prevent failure owing to pressure gradients (including static head and external hydrological forces), physical contact with the waste(s) or substances to which it is exposed, climatic conditions, and the stress of daily operation (including stresses from nearby vehicular traffic).*

   The primary corrosion hazards associated with the tank farm waste is alkalinity, nitrates, and nitrites. The selection of stainless steel and concrete for the secondary containment system was reviewed and determined to be acceptable in this situation. As such, the secondary containment systems associated with the diversion boxes were determined to be compatible with the hazardous or radioactive substance(s) currently contained within the tank system.

   The structural nature of the diversion boxes was determined to be adequate to prevent failure of the containment system resulting from pressure gradients, climatic conditions, and

vehicular traffic. However, it was noted that in-leakage to the secondary containment system of the unlined diversion boxes is a breach of the secondary containment system. This statement was referring to in-leakage resulting from deterioration of the concrete roof joint seals; this statement was not intended to indicate a failure of the secondary containment system. The in-leakage is contained within the diversion box or gravity drains to a catch tank (FDB1). This in-leakage was viewed as precipitation into the secondary containment system which is allowed under the FFA secondary containment provisions for tanks provided the capacity is sufficient to contain the precipitation from a 25-year, 24-hour rainfall event. Since there is no known out-leakage for the diversion box, the secondary containment system was determined not to have failed and to meet the above FFA requirement.

2) *Placed on a foundation or base capable of providing support to the secondary containment system, resistance to pressure gradients above and below the system, and capable of preventing failure due to settlement, compression, or uplift.*

   Based on review of engineering drawings, it was determined the foundation is adequate to support the secondary containment system. Although the HDB2 stainless steel liner has buckled, the subsequent leak testing indicated that failure of the liner did not occur. As such, the secondary containment systems for the diversion boxes were determined to meet the above FFA requirement.

3) *Provided with a leak-detection system that is designed and operated so that it shall detect the failure of either the primary or secondary containment structure or the presence of any leak of hazardous or radioactive constituents, hazardous substances, or accumulated liquid in the secondary containment system within 24 hours, or at the earliest practicable time if the DOE can demonstrate that existing detection technologies or site conditions will not allow detection of a leak within 24 hours.*

   Each diversion box contains a device (e.g., conductivity probe or pneumatic bubbler) capable of detecting liquids. If liquids are detected, an alarm is sounded in a control room to alert operators of a potential problem. The operators will take the necessary actions, including termination of the transfer operations. This system is capable of detecting failure of the primary containment structure or in-leakage into the secondary containment system within the required 24-hour time period. As such, the secondary containment systems for the diversion boxes were determined to meet the above FFA requirement.

4) *Sloped or otherwise designed or operated to drain and remove liquids resulting from leaks or precipitation. Leaked substances and accumulated system within 24-hours, or in as timely a manner as is possible to prevent harm to human health*

and the environment, if the DOE can demonstrate that removal of the leaked substance or accumulated precipitation cannot be accomplished within 24 hours.

All of the diversion boxes are sloped to sumps, drained to other tanks or pump pits, or otherwise designed to allow the removal of accumulated liquids. Mechanical or jet pumps are used to remove the liquids from the secondary containment system. Operational procedures need to be followed to ensure that liquids are removed from these sumps, catch tanks, pump pits, etc. within the required 24-hour time period. Since there is the capability to remove liquids within 24 hours, the secondary containment systems for the diversion boxes were determined to meet the above FFA requirement.

5) *The FFA provides examples of acceptable secondary containment systems for ancillary equipment. These systems include: double walled pipes, jacketing, and trenches.*

   The diversion boxes were determined to be an acceptable secondary containment system for the jumpers in the form of a trench. Therefore, the above FFA provision is satisfied.

Based upon the above findings, it was concluded that both the lined and unlined diversion boxes fulfilled all of the FFA requirements for secondary containment systems.

Very truly yours,
PARSONS

R L Stegen

Richard L. Stegen, P.E. - #12633
Environmental Engineering Manager

RLS/ah

c: R. L. Glenn

Westinghouse
Savannah River Company

P.O. Box 616
Aiken, SC 29802

ESH-FSS-92-0764

October 26, 1992

Mr. L. E. Arrington, Engineer
Industrial and Agricultural Wastewater Division
South Carolina Department of Health
and Environmental Control
2600 Bull Street
Columbia, South Carolina 29201

Dear Mr. Arrington:

SRS RESPONSE TO SCDHEC / EPA REVIEW COMMENTS ON F/H AREA HIGH LEVEL RADIOACTIVE WASTE TANK FARM ASSESSMENT REPORTS (U)

Ref: Letter, L. E. Arrington to J. V. Odum, 7/7/92

Please find enclosed the SRS response package to the subject review comments. Each comment has been addressed and in some cases has been combined with other similar comments. As discussed previously with DHEC, the SRS is responding to the comments by providing additional information and not by amending the assessment reports.

Responses to the concerns expressed in the referenced cover letter have also been incorporated into the package. DHEC concern over inspection of the entire tank wall is responded to in Comment 73 (page 76). The issues involving Tank 13 are addressed in Comment 75 (page 78). Comment 76 (pages 79 and 80) addresses the future use of Tanks 2 through 8. There were also two concerns expressed in the introduction to the comments on the Phase II Assessment involving waste removal and contingency plans. These concerns are addressed in Comments 77 and 78, respectively.

As a result of conversation between yourself and Mr. C. R. Hayes, a presentation on the waste removal schedule will be provided for your information in the near future. Currently, the schedule is under WSRC / DOE evaluation.

The SRS appreciates your assistance in this matter. Please contact C. R. Hayes (725-8838) if there are any questions.

Yours very truly,

W D Dunaway

W. D. Dunaway, Manager
Permitting Field Support Group
Environmental Protection Department

CRH:pr
Attachment

CC: M. C. Reece, SCDHEC, Lower Savannah District
C. Richardson, SCDHEC, Columbia
A. B. Gould, 703-41A (2) Concur *
* w/one attachment

BCC:

C. E. Anderson, 703-H
C. Blair-McManus, 703-H
J. E. Bolen, 703-41A
S. S. Cathey, 703-H
J. W. Cook, 742-A
L. S. Coward, 703-18A *
P. D. D'Entremont, 703-H
H. L. Davis, 703-41A
W. D. Dunaway, 703-18A
T. P. Gaughan, 241-120-H
A. R. Gough, 992-3W
M. Hawkins, 742-A
C. R. Hayes, 703-18A
M. A. Hunter, 742-6G
B. L. Lewis, 703-H
T. M. Monahon, 703-H
J. V. Odum, 742-A
R. L. Peterson, 703-41A
J. S. Roberts, 742-A
R. Roosa, 703-H
R. M. Satterfield, 719-4A
G. F. Stejskal, 742-A
C. B. Stevens, 742-6G
W. L. Stubbs, 703-H
K. S. Wierzbicki, 742-6G
K. Z. Wolf, 704-15S
G. T. Wright, 703-H
Records Administration, 773-52A *
EPD Fileroom, 742-A

* w/attachment

LDR FFCA AS APPLIES TO HIGH LEVEL WASTE TANKS

Presented by Matthew Hunter

Ocotober 23, 1992

LDR FFCA Applies to Four High Level Waste Tanks

Appiles to Receipt of Newly Generated LDR Waste Into Tanks 13, 21, 22 and 23

Tk 13: Evaporator Feed Tank
Tk 21: In-Tank Precipitation Recycle Receipt
Tk 22: Extended Sludge Processing Recyle Receipt
Tk 23: Receiving Basin for Off-site Fuels Receipt

10/23/92

Status of Tanks:

Tanks Are Needed For Following Reasons :

Tk 13: Restart of Evaporator
Tk 21: In-Tank Precipitation Hot Start-Up
Tk 22: Extended Sludge Processing Restart
Tk 23: Resolved ?

Ties to Federal Facilities Agreement

PROVISIONS:

is

- Once the Federal Facilities Agreement (FFA) signed, the FFA will supercede the FFCA.

d

- The FFA will allow receipt of Newly Generate LDR waste into these tanks.

?

space

- If the FFA is not signed by July 31, 1991, containment demonstrations may be submitted.

10/23/92

FFA Background

Contains sections specific to High Level Waste Tank Farms

Provides standards for secondary containment and for removal of tanks from service

Requires submission of:

- Wastewater Permit Application
- Tank Assessments
- Schedule for Removal of Waste Tank Systems from Service

Department of Energy
Field Office, Savannah River
P.O. Box A
Aiken, South Carolina 29802

OCT 23 1992

Dr. G. T. Wright
Manager, Interim Waste Programs
Westinghouse Savannah River Company
P. O. Box 616
Aiken, SC 29802

Dear Dr. Wright:

LIQUID WASTE DIVISION RESPONSE TO TRANSMITTAL RESPONSES FOR SOUTH CAROLINA DEPARTMENT OF HEALTH AND ENVIRONMENTAL CONTROL (SCDHEC) COMMENTS ON THE TANK ASSESSMENTS FOR F- AND H-AREA TANK FARMS (LETTER, WRIGHT TO ANDERSON, 10/8/92, WER-HLW-920143; LETTER, WRIGHT TO ANDERSON, 10/22/92)

We have received and reviewed your revised responses (Revision 0) to the SCDHEC comments on the Phase I and II Tank Assessment Reports for F- and H-Area Tank Farms. Based on our review, we concur with the revised responses.

Please direct questions to me or Cindi Blair-McManus at extension 7-8248.

Sincerely,

for Charles E. Anderson, Director
Liquid Waste Division

LWPB:CBM

cc: R. Roosa, 703-H
K. O. Noblett, 703-H

OSR 3-4A-W (Rev 1-89)

WESTINGHOUSE SAVANNAH RIVER COMPANY

INTER-OFFICE MEMORANDUM

WER-HLE-921233

October 22, 1992

To: C. R. Hayes, 703-18A

From: M. A. Hunter, 742-6G MAH

Response Packages for DHEC Comments on Tank Assessments

Please find attached the requested number (3) of response packages for transmittal to the South Carolina Department of Health and Environmental Control. The remaining packages will be forwarded to you by 10/30/92. Thank you for your assistance in these matters.

CC (w/o attachments):

G. T. Wright, 703-H
S. S. Cathey, 703-H
T. M. Monahon, 703-H
R. M. Satterfield, 719-4A
W. B. Boore, 719-4A
R. K. Roosa, 703-H
K. S. Wierzbicki, 742-6G
C. B. Stevens, 742-6G
B. L. Lewis, 703-H
M. S. Peters, 703-F
G. D. Thaxton,241-120H
T. P. Gaughan, 241-152H

Department of Energy
Field Office, Savannah River
P.O. Box A
Aiken, South Carolina 29802

OCT 2 1 1992

Dr. G. T. Wright
Manager, Interim Waste Programs
Westinghouse Savannah River Company
P. O. Box 616
Aiken, SC 29802

Dear Dr. Wright:

LIQUID WASTE DIVISION RESPONSE TO TRANSMITTAL RESPONSES FOR SOUTH CAROLINA DEPARTMENT OF HEALTH AND ENVIRONMENTAL CONTROL (SCDHEC) COMMENTS ON THE TANK ASSESSMENTS FOR F- AND H-AREA TANK FARMS (LETTER, WRIGHT TO ANDERSON, 10/8/92, WER-HLW-920143; LETTER, ARRINGTON TO ODUM, 7/7/92)

We have received and reviewed your responses to the SCDHEC comments on the Phase I and II Tank Assessment Reports for F- and H-Area Tank Farms. Based on our informal review of the most recent revision on October 21, 1992 and discussions with M. A. Hunter, C. B. Stevens, and R. Roosa of your staff, we will concur with the responses upon receipt of a formal transmittal of the most recent revision of the responses.

Please direct questions to me or Cindi Blair-McManus at extension 7-8248.

Sincerely,

for Charles E. Anderson, Director
Liquid Waste Division

LWPB:CBM:cb

cc: R. Roosa, 703-H
K. O. Noblett, 703-H

INTER-OFFICE MEMORANDUM
Savannah River Site

Date: 19-Oct-1992 09:52pm EDT
From: Brenda L. Lewis
LEWIS-BL-O6503 AT A1 AT SASRS2
Dept:
Tel No: x7-8720 Beeper 1014

TO: See Below

Subject: RE: Transfer Line Meeting Minutes

Thanks for documenting meeting minutes. One correction needed. The transfer line from DB5 to Tank 24 will also be put on the schedule and no upgrades will be made.

Distribution:

TO:	Matthew A. Hunter	(HUNTER-MA-L2335 AT A1 AT SASRS2)
CC:	Chuck Hayes	(HAYES-CR-Z9722 @A1@SLSRP1)
CC:	W.C. Clark	(CLARK-WC-O6888 AT A1 AT SASRS2)
CC:	David F. White	(WHITE-DF-T7890 AT A1 AT SASRS2)
CC:	Mark P. Reimnitz	(REIMNITZ-MP-Y5989 AT A1 AT SASRS2)
CC:	Mark J. Mahoney	(MAHONEY-MJ-O5457 AT A1 AT SASRS2)
CC:	PAUL D. D'ENTREMONT	(D'ENTREMONT-PD-O5438 AT A1 AT SASRS2)
CC:	Mario A. Ceravolo, 703-H	(CERAVOLO-MA-O7495 AT A1 AT SASRS2)
CC:	Karen F. Lesko	(LESKO-KF-O7041 AT A1 AT SASRS2)
CC:	Robert W. Wilson	(WILSON-RW-T4847 AT A1 AT SASRS2)
CC:	CARY B. STEVENS	(STEVENS-CB-O5981 AT A1 AT SASRS2)
CC:	Phillip W. Norris	(NORRIS-PW-L0900 AT A1 AT SASRS2)
CC:	Rod M. Satterfield	(SATTERFIELD-RM-T3212 @A1@SLSRP1)
CC:	Ginny Ellis	(ELLIS-VE-W0928 AT A1 AT SASRS2)
CC:	TOM MONAHON	(MONAHON-TM-O4411 @A1@SRXSS2)
CC:	Dot Matthews	(MATTHEWS-DL-W0643 AT A1 AT SASRS2)
CC:	Kim S. Wierzbicki	(WIERZBICKI-KS-O6535 AT A1 AT SASRS2)
CC:	Roger K. Roosa	(ROOSA-RK-L4532 AT A1 AT SASRS2)
C:	Mike Rea	(REA-MJ-O8913 AT A1 AT SASRS2)

7

INTER-OFFICE MEMORANDUM
Savannah River Site

Date: 16-Oct-1992 03:18pm EDT
From: Matthew A. Hunter
HUNTER-MA-L2335 AT A1 AT SASRS2
Dept: WMRC
Tel No: x7-0520/bp# 6761

TO: See Below

Subject: Transfer Line Meeting Minutes

Meeting Minutes from 10/12/92 Transfer Lines Leak Detection meeting

Currently, six transfer lines have been identified as lacking testability and leak detection capabilities. These lines are as follows:
Tk14 to Tk13
Tk16 to Tk13
DB 5 to Tk21
DB 5 to Tk22
DB 5 to Tk23
DB 5 to Tk24

Two lines can be put on schedule for remove with the tanks.
Tk14 to Tk13
Tk16 to Tk13

It was agreed that the remaining lines need to have leak detection and testability and that the work could be done under Project S-2081.

The deficiencies with each tank were discussed and solutions proposed.

-For Tanks 21 and 22, Leak Detection Boxes would be installed in the existing smear pipes and "doughnut" seal plates could be placed in each tank riser. Tank 22 will also require the installation of three seal plates in the valve box.

-Tanks 23 and 24 will require more work than the others since smear pipes do not exist. The job would require cutting into the jackets and installing Leak Detection Boxes. Some type of seal would also need to be placed in each riser to allow pressure testing of the lines

Several other lines were mentioned at the meeting that will require research in order to determine their status. It was agreed in this meeting that the upgrades should be completed prior to the transfer of ESP wash water into Tk21, before getting sludge out of Tk22 prior to ITP wash water additions and prior to removing the sludge from Tk23. The expected cost for all four of these line upgrades is $500K to 700K.

ACTION PLAN

-Make phone call to DHEC to inform of existence of inconsistencies. (Matt Hunter and Chuck Hayes)
Complete (10/13)

-Review of additional lines (Phillip Norris - Week of 10/19)

-Meet with ITP/ESP to get support and buy-in that testability and leak detection are needed prior to wash water transfers to Tk21 and to get sludge out of Tk22 and Tk23. (Mark Reimnitz and Brenda Lewis)
Complete - Mark Keefer has committed to support (10/15)

-Complete Conceptual Study (DE)

-Identify ESR funding to determine design and funding. (Mark Reimnitz)

-Get approval to change scope of Project S-2081 to incorporate line upgrades. (Mark Reimnitz and Brenda Lewis)

-Transmit formal notification to DHEC in writing of extent and proposed path-forward for lines. (Matt Hunter - Week of 10/26)

Distribution:

TO:	Phillip W. Norris	(NORRIS-PW-L0900 AT A1 AT SASRS2)
TO:	CARY B. STEVENS	(STEVENS-CB-O5981 AT A1 AT SASRS2)
TO:	Robert W. Wilson	(WILSON-RW-T4847 AT A1 AT SASRS2)
TO:	Karen F. Lesko	(LESKO-KF-O7041 AT A1 AT SASRS2)
TO:	Mario A. Ceravolo, 703-H	(CERAVOLO-MA-O7495 AT A1 AT SASRS2)
TO:	PAUL D. D'ENTREMONT	(D'ENTREMONT-PD-O5438 AT A1 AT SASRS2)
TO:	Mark J. Mahoney	(MAHONEY-MJ-O5457 AT A1 AT SASRS2)
TO:	Mark P. Reimnitz	(REIMNITZ-MP-Y5989 AT A1 AT SASRS2)
TO:	David F. White	(WHITE-DF-T7890 AT A1 AT SASRS2)
TO:	W.C. Clark	(CLARK-WC-O6888 AT A1 AT SASRS2)
TO:	Chuck Hayes	(HAYES-CR-Z9722 @A1@SLSRP1)
TO:	Brenda L. Lewis	(LEWIS-BL-O6503 AT A1 AT SASRS2)
CC:	Mike Rea	(REA-MJ-O8913 AT A1 AT SASRS2)
CC:	Roger K. Roosa	(ROOSA-RK-L4532 AT A1 AT SASRS2)
CC:	Kim S. Wierzbicki	(WIERZBICKI-KS-O6535 AT A1 AT SASRS2)
CC:	SUSAN S. CATHEY	(CATHEY-SS-O4949 AT A1 AT SASRS2)
CC:	TOM MONAHON	(MONAHON-TM-O4411 @A1@SRXSS2)
CC:	Todd Wright	(WRIGHT-GT-T6181 AT A1 AT SASRS2)
C:	Rod M. Satterfield	(SATTERFIELD-RM-T3212 @A1@SLSRP1)

TR File
W-0517

WSRC-EPD Telecon Record

Subject Title : Wastewater Permitting ***Date:*** 10/13/92 ***Time:***

Purpose: To clarify issues regarding permitting of the F/H Tank Farms

Call Made By: H. L. Davis, C. R. Hayes, M. A. Hunter, C. Blair-McManus CR Hayes

Person(s) Contacted: L. E. Arrington

Discussion Notes:

Caller	Respondent
The purpose of this call is to update you on the latest schedule for responding to your comments on the Tank Assessment reports. We plan to have a response to you around the early - middle part of next week (10/19).	Sounds good. We are anxious to see a response.
Also, in researching answers to your comments we've discovered some inconsistencies within the Phase II Assessment Report. Apparently, some transfer lines don't have leak detection as the PE has claimed. We are researching the problem and plan to respond to you at a later date.	What lines in particular are you referring to?
Some type II transfer lines. We don't know exactly how many yet. We will continue to research the problem and get back to you at a later date.	So we won't see anything regarding this matter with your response next week?
No. We haven't researched the situation fully.	OK, we look forward to your response.

Additional Actions Needed:
SRS to submit responses to DHEC comments on the assessments week of 10/19.

Distribution:
L. S. Coward, 703-18A (PFSG-File)
H. L. Davis, 703-41A
W. D. Dunaway, 703-18A
C. R. Hayes, 703-18A
M. A. Hunter, 742-6G
J. V. Odum, 742-A
G. F. Stejskal, 742-A
C. Blair-McManus, 703-H

W-0517

INTER-OFFICE MEMORANDUM
Savannah River Site

Date: 13-Oct-1992 11:16am EDT
From: Chuck Hayes
HAYES-CR-Z9722
Dept: EPD
Tel No: X58838

TO: Matthew A. Hunter (HUNTER-MA-L2335 @A1@SASRS2)

CC: W. DANNY DUNAWAY (DUNAWAY-WD-O7436)
CC: Ann R. Gough (GOUGH-AR-Y5417)
CC: Gerry F. Stejskal (STEJSKAL-GF-Y6594)

Subject: HAZARDOUS LOW LEVEL WASTE PRCESSING TANKS (U)

I am convinced that I am not in a position to take a stand on this but I will tell you my thoughts. Regardless of whether or not DHEC has the authority to decide if these tanks should be built, they did state at the 7/17/92 Charlie Anderson presentation that "decisions / input on the issue cannot be made until SCDHEC sees the waste removal schedule". I don't know if this helps you any, but thats about all I know on the issue.

Please call if you have questions.

INTER-OFFICE MEMORANDUM
Savannah River Site

Date: 09-Oct-1992 11:18am EDT
From: Matthew A. Hunter
HUNTER-MA-L2335 AT A1 AT SASRS2
Dept: WMRC
Tel No: x7-0520/bp# 6761

TO: Chuck Hayes (HAYES-CR-Z9722 @A1@SLSRP1)

CC: Ann R. Gough (GOUGH-AR-Y5417 @A1@SLSRP1)

Subject: Hazardous Low Level Waste Processing Tanks

Chuck,

For WM's budget to proceed with reprogramming of money, they would like documentation that DHEC knows and Approves the reprogramming of the money that was designated for the Hazardous Low Level Waste Processing Tanks. Could you please address the question of their approval as discussed at the Charlie Anderson meeting with DHEC several months ago. Once DHEC see the schedule and the fact that the Type IV tanks will be used until 2010 or so, what do you think there reaction will be? If they do not approve the reprogramming, what will the legal repercussions be? Please bring anything else into this discussion that you feel is appropriate.

Thanks
=>Matt

7/17/92

~~732-4708~~

SCDHEC - DOE - WSRC WASTE TANKS MEETING

DHEC KEY QUESTION: HOW LONG WILL IT NOW TAKE (W/O NEW TANKS) TO GET OUT OF ~~TYPE~~ NON TYPE III TANKS?

DHEC: HAVE TO HAVE SCHEDULE IN ORDER TO MAKE DECISIONS

Name	Association	Phone #
Shelly Sherrill	SCDHEC - H.W. Permitting	734-5203
Chuck Hayes	WSRC - Wastewater Permitting	725-8838
David Wilson	SCDHEC - H/W Permitting	734-5173
Randy Thompson	SCDHEC - " "	734-4711
Alan Coffey	SCDHEC " "	734-5174
Carl Richardson	SCDHEC Industrial WW	734-5246
Larry E. Arrington	SCDHEC Industrial WW	734-5251
M. Philip Prater	DOE - SR / ECD	725-1557
Bruce Lawrence	WSRC - HW	725-3690
Mark Mahoney	WSRC - HLW	557-1410
Matt Hunter	WSRC - NHRC	557-1047
Charlie Anderson	DOE	557-1791
Cynthia Blair-McManus	DOE-SR/LWD	557-8248
Robert Hucks	SCDHEC - FFA	734-5437

cc: JVO
~~WDD~~
GFS

JSR -

- Mtg tomorrow at DHEC on Tank Farm
- WSRC has raised concerns that the mtg is premature for several major issues now being worked (tank outage schedule & Tank assessment comments)
- Boyter wants to go ahead with meeting
- WSRC will attend (Chuck Hayes & I are going) but will not present - DOE WM will present. K Wierzbicki will attend for WM WSR
- We are not advocating the cancellation of this meeting, but potential is there to disrupt the WW permit preparation. You may want to let Campbell know

ps: Truesdale originally requested the meeting ~3 wks ago to learn more about the farm & associated projects

Bruce Laurence
7/16/92

CRH,
FFY

HIGH LEVEL LIQUID WASTE OVERVIEW

C. E. ANDERSON 7/17/92

F154

SRS Overview

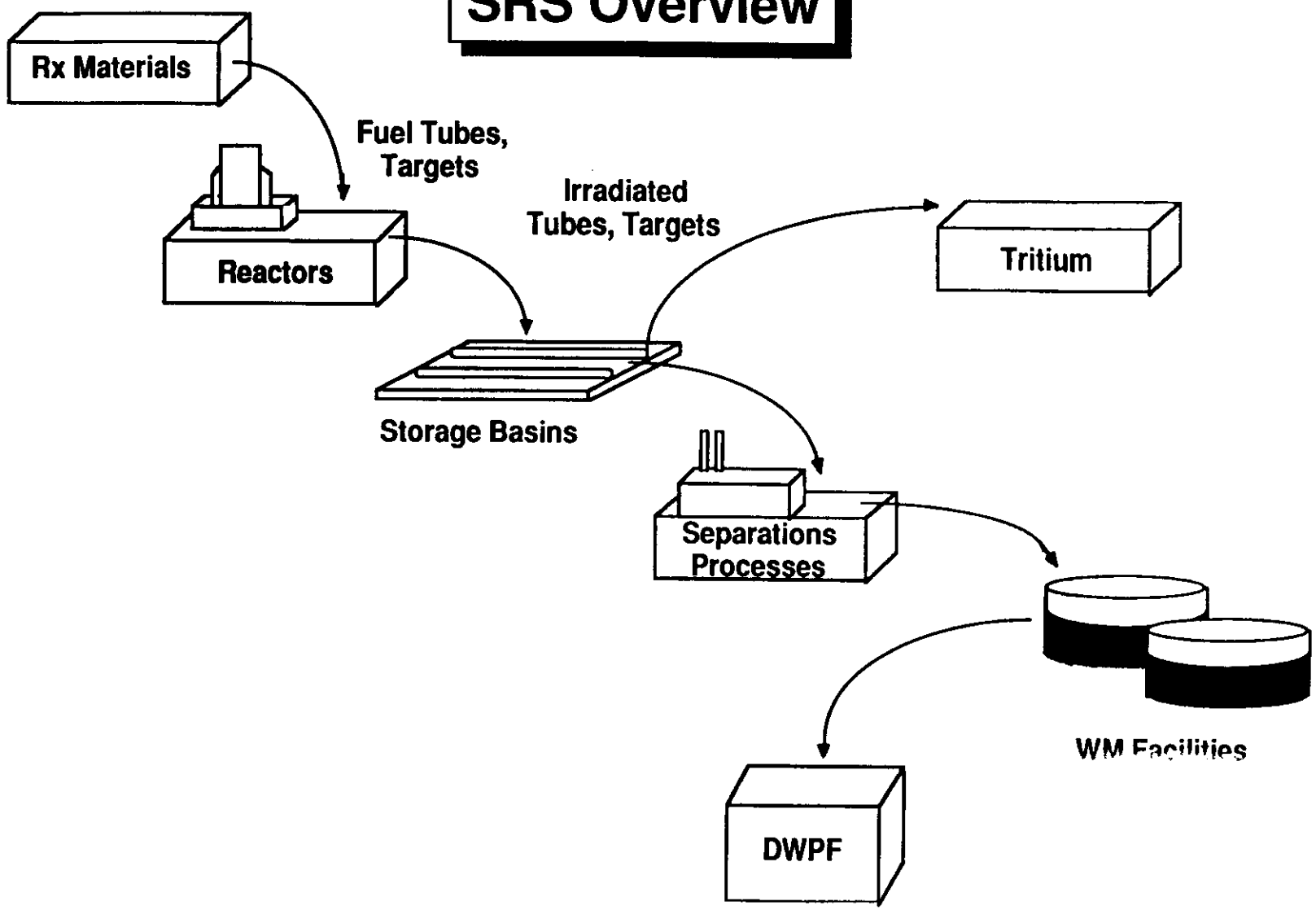

Waste Management Facilities

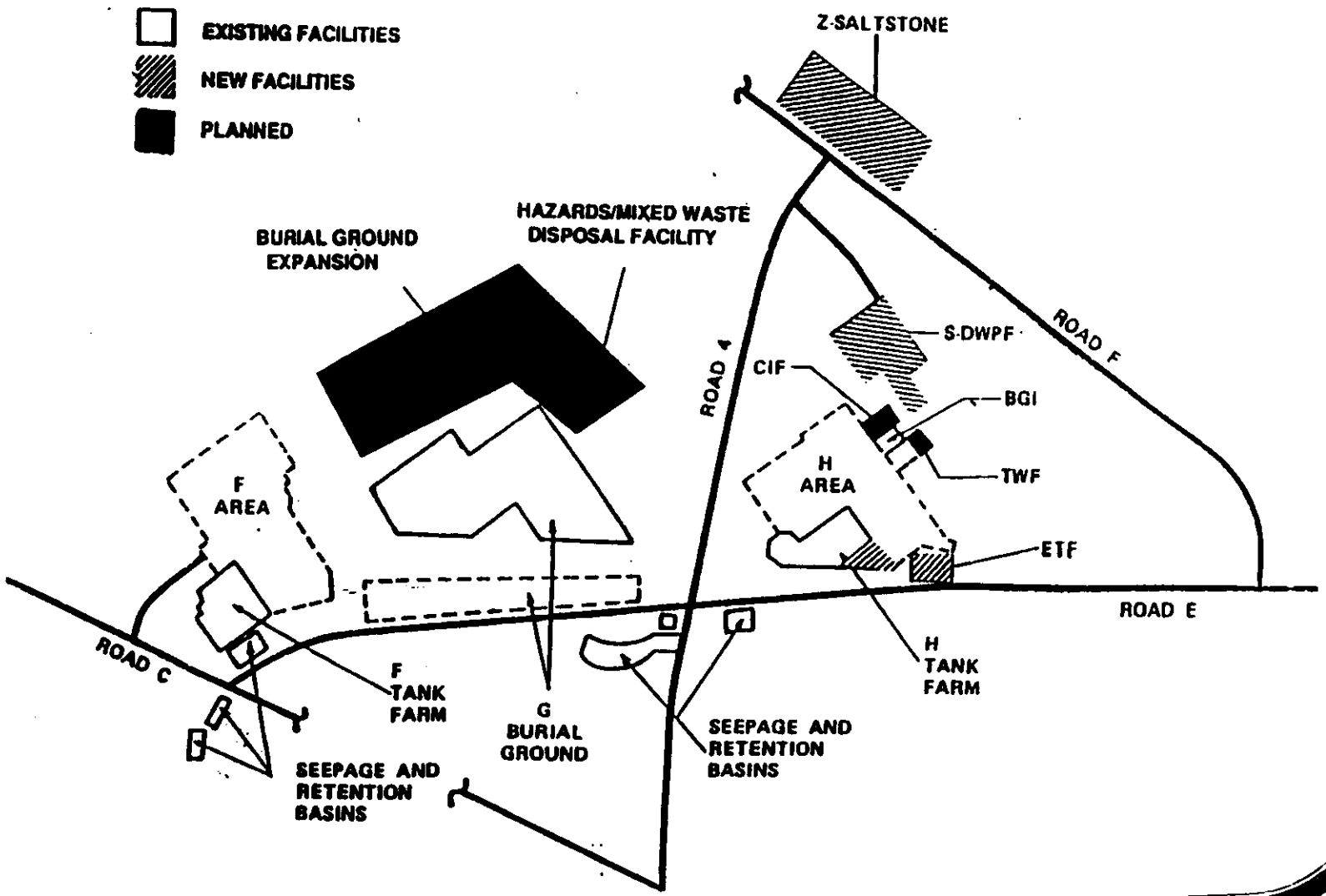

SRS High-Level Waste Management System

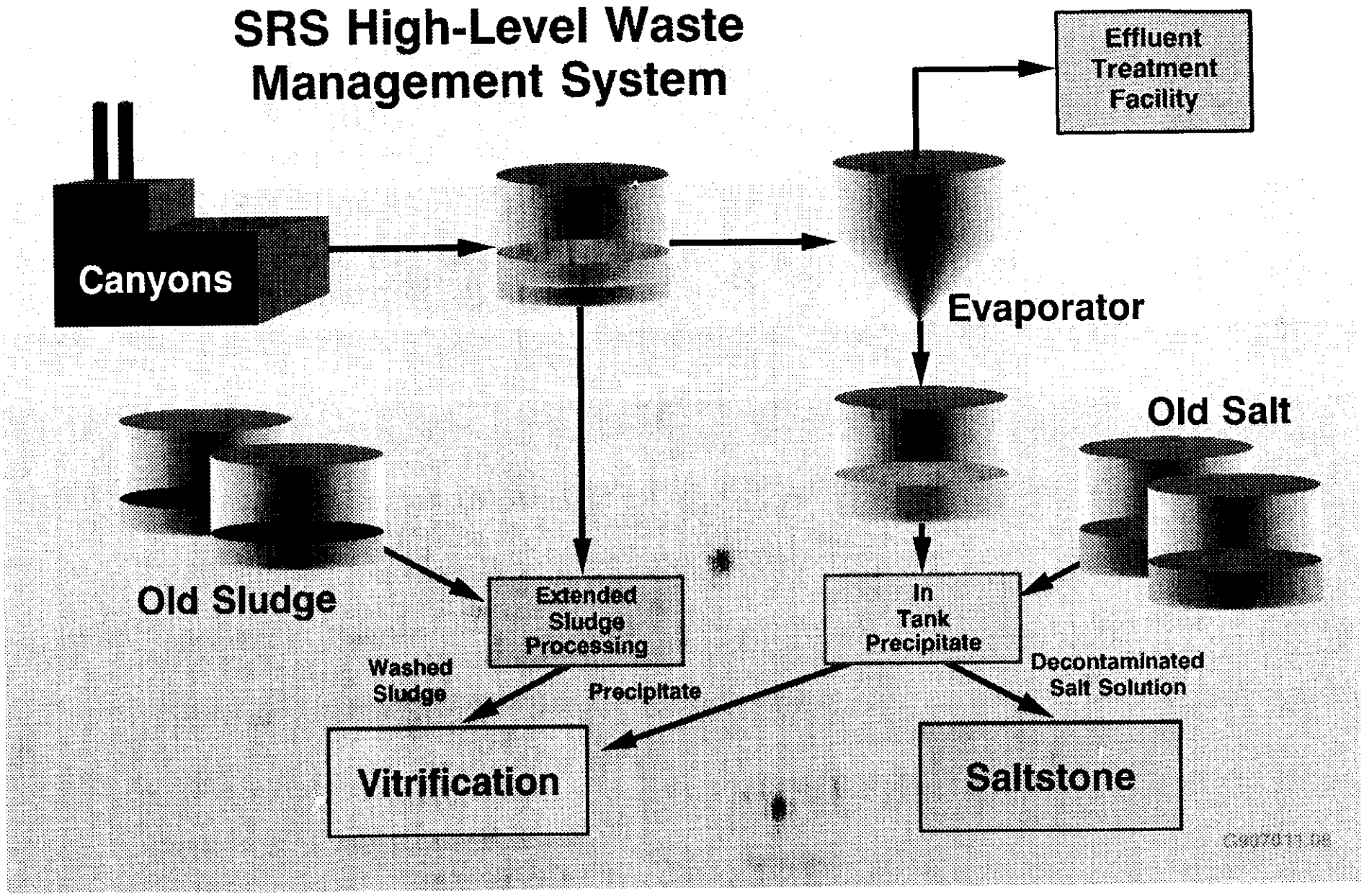

Current Waste Inventory

Generated by Operations — 86 Million Gallons

↓

Stored After Evaporation — 34 Million Gallons

↓

DWPF

↙ Borosilicate Glass
99.999% of Activity

↘ Decontaminated Saltstone
0.001% of Activity

WASTE TANK LEVELS

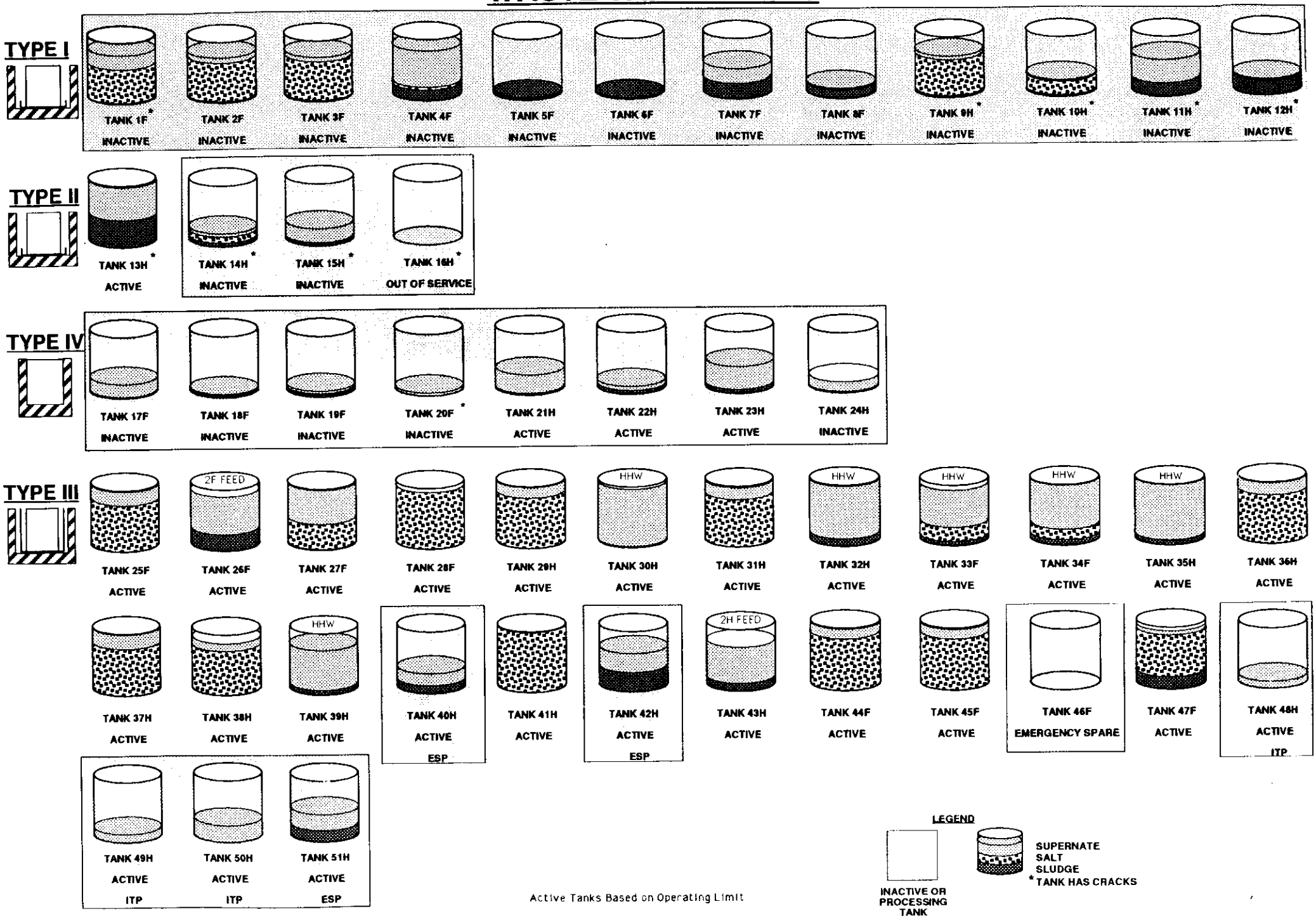

Active Tanks Based on Operating Limit

STATUS OF TYPE III TANK CAPACITY

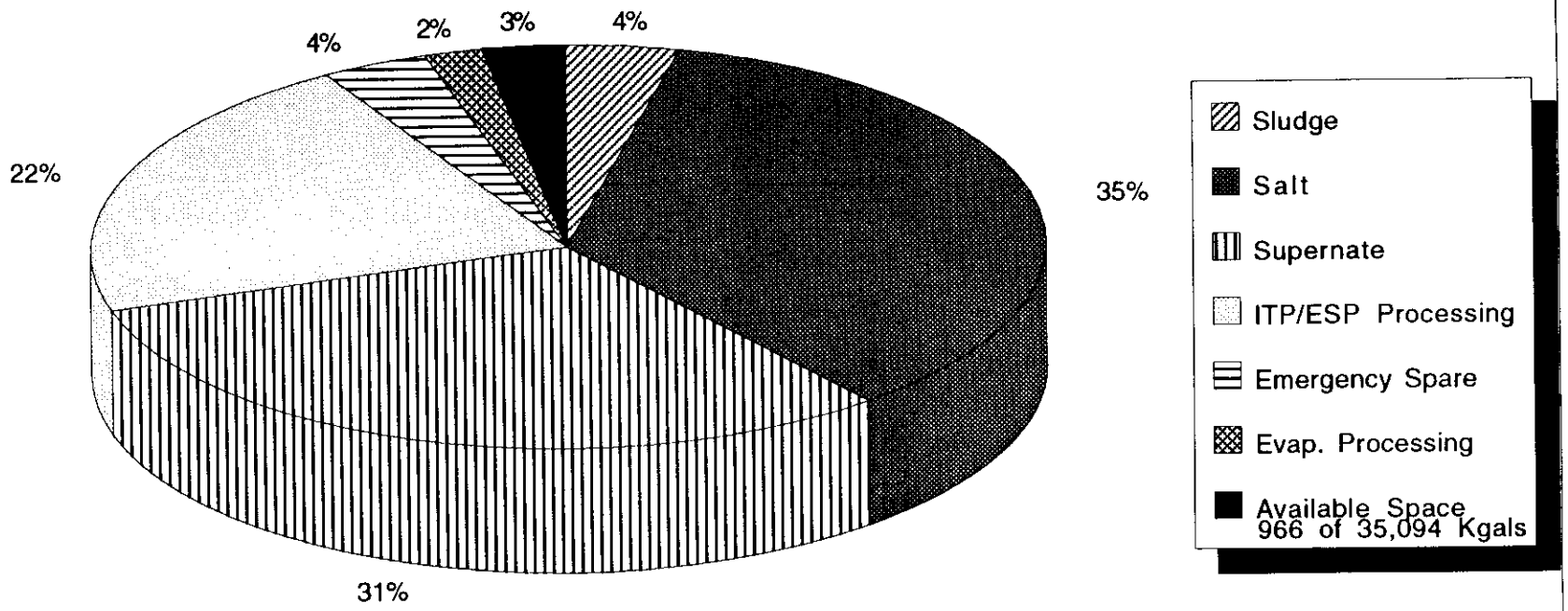

Totals Include 1H Evap. Feed Tank (Tank 13)
Data as of 7/15/92

Types of Tanks

Type	First Service	No. Tanks	Gal/Tank	Curies (Millions)	Experience
I	1954	12	750,000	152	5 have cracks
II	1956	4	1,030,000	47	4 have cracks
IV	1959	8	1,300,000	< 1	Minor water incursion into 1 tank
III	1969	27	1,300,000	406	No tanks have leaked

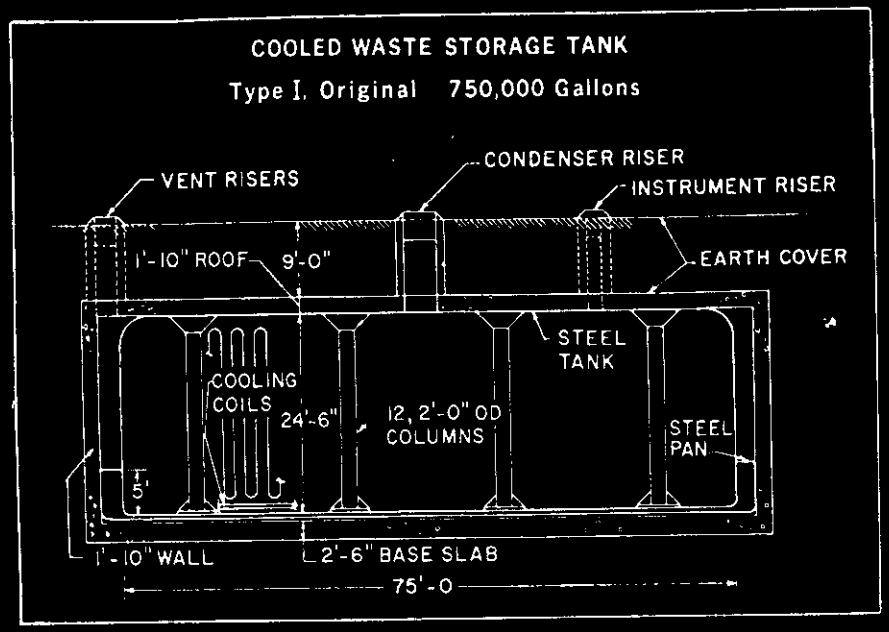
COOLED WASTE STORAGE TANK
Type I. Original 750,000 Gallons
VENT RISERS
CONDENSER RISER
INSTRUMENT RISER
1'-10" ROOF
9'-0"
EARTH COVER
STEEL TANK
COOLING COILS
24'-6"
12, 2'-0" OD COLUMNS
STEEL PAN
5'
1'-10" WALL
2'-6" BASE SLAB
75'-0

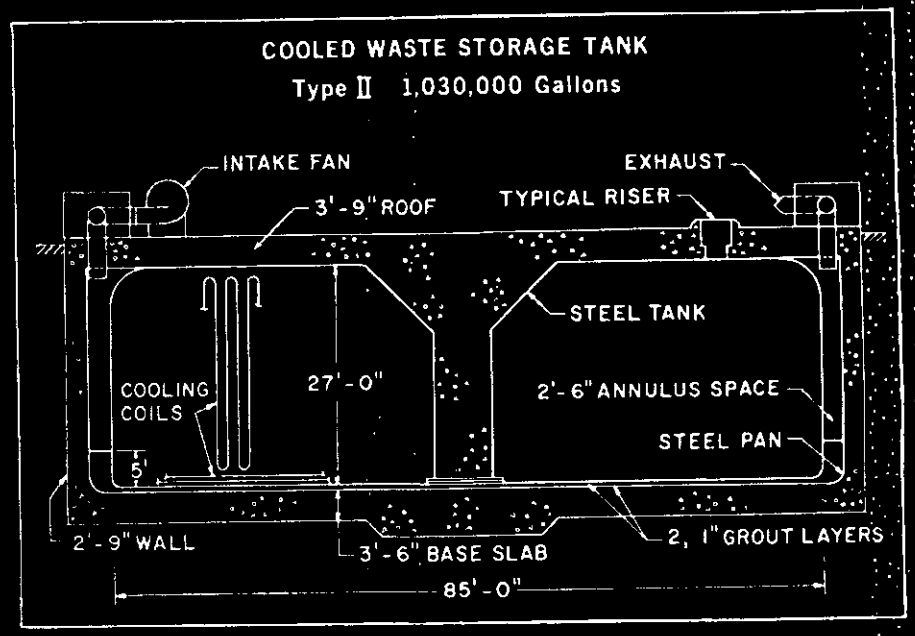
COOLED WASTE STORAGE TANK
Type II 1,030,000 Gallons
INTAKE FAN
EXHAUST
3'-9" ROOF
TYPICAL RISER
STEEL TANK
COOLING COILS
27'-0"
2'-6" ANNULUS SPACE
STEEL PAN
5'
2'-9" WALL
3'-6" BASE SLAB
2, 1" GROUT LAYERS
85'-0"

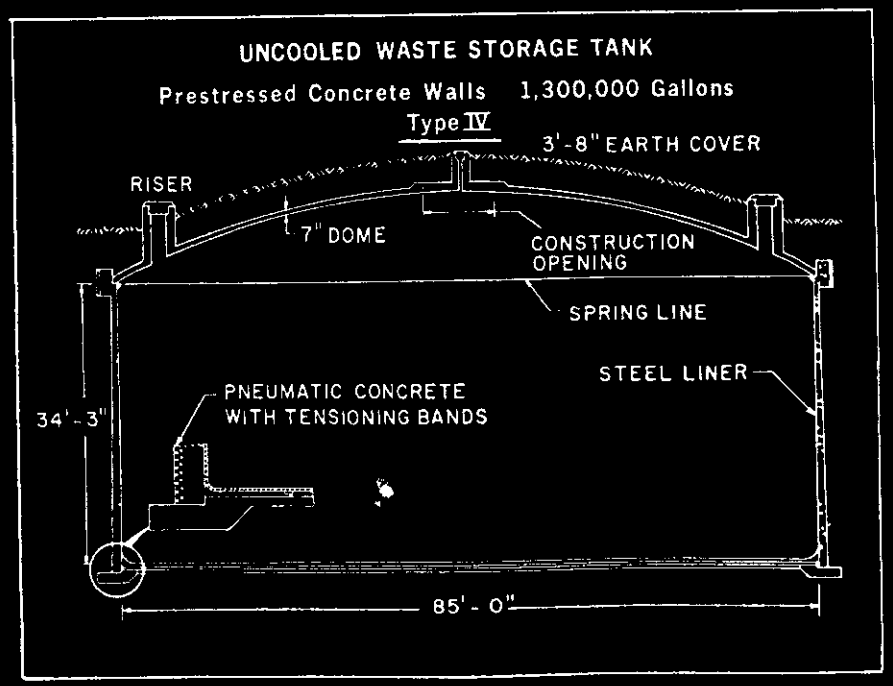
UNCOOLED WASTE STORAGE TANK
Prestressed Concrete Walls 1,300,000 Gallons
Type IV
3'-8" EARTH COVER
RISER
7" DOME
CONSTRUCTION OPENING
SPRING LINE
STEEL LINER
PNEUMATIC CONCRETE WITH TENSIONING BANDS
34'-3"
85'-0"

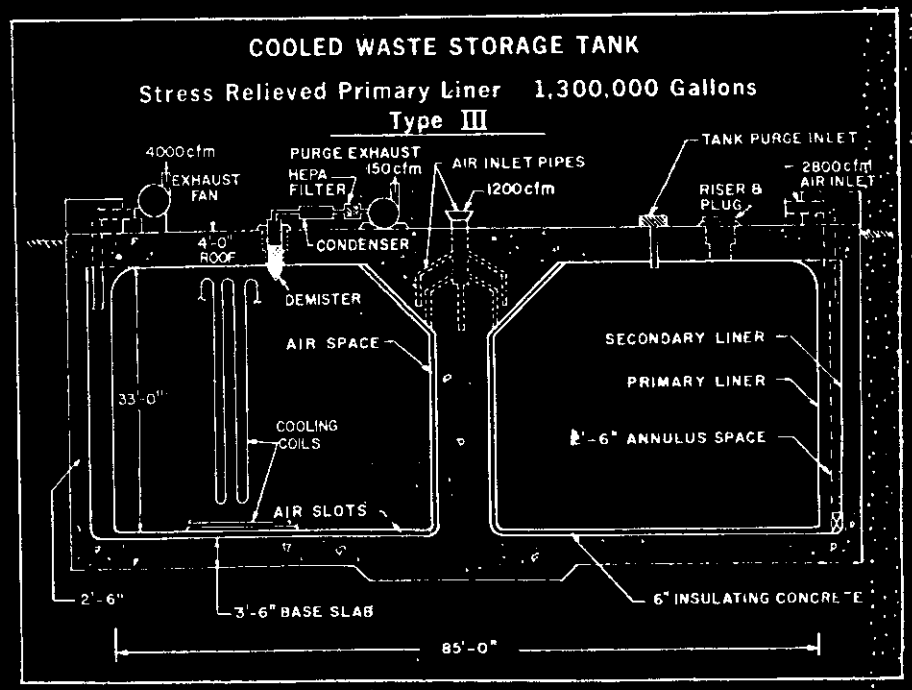
COOLED WASTE STORAGE TANK
Stress Relieved Primary Liner 1,300,000 Gallons
Type III
4000cfm
EXHAUST FAN
PURGE EXHAUST 150cfm
HEPA FILTER
AIR INLET PIPES
1200cfm
TANK PURGE INLET
2800cfm AIR INLET
RISER & PLUG
4'-0" ROOF
CONDENSER
DEMISTER
AIR SPACE
SECONDARY LINER
PRIMARY LINER
33'-0"
COOLING COILS
2'-6" ANNULUS SPACE
AIR SLOTS
2'-6"
3'-6" BASE SLAB
6" INSULATING CONCRETE
85'-0"

New Waste Storage Tank

(1,300,000-Gallon Stress-Relieved Tank)

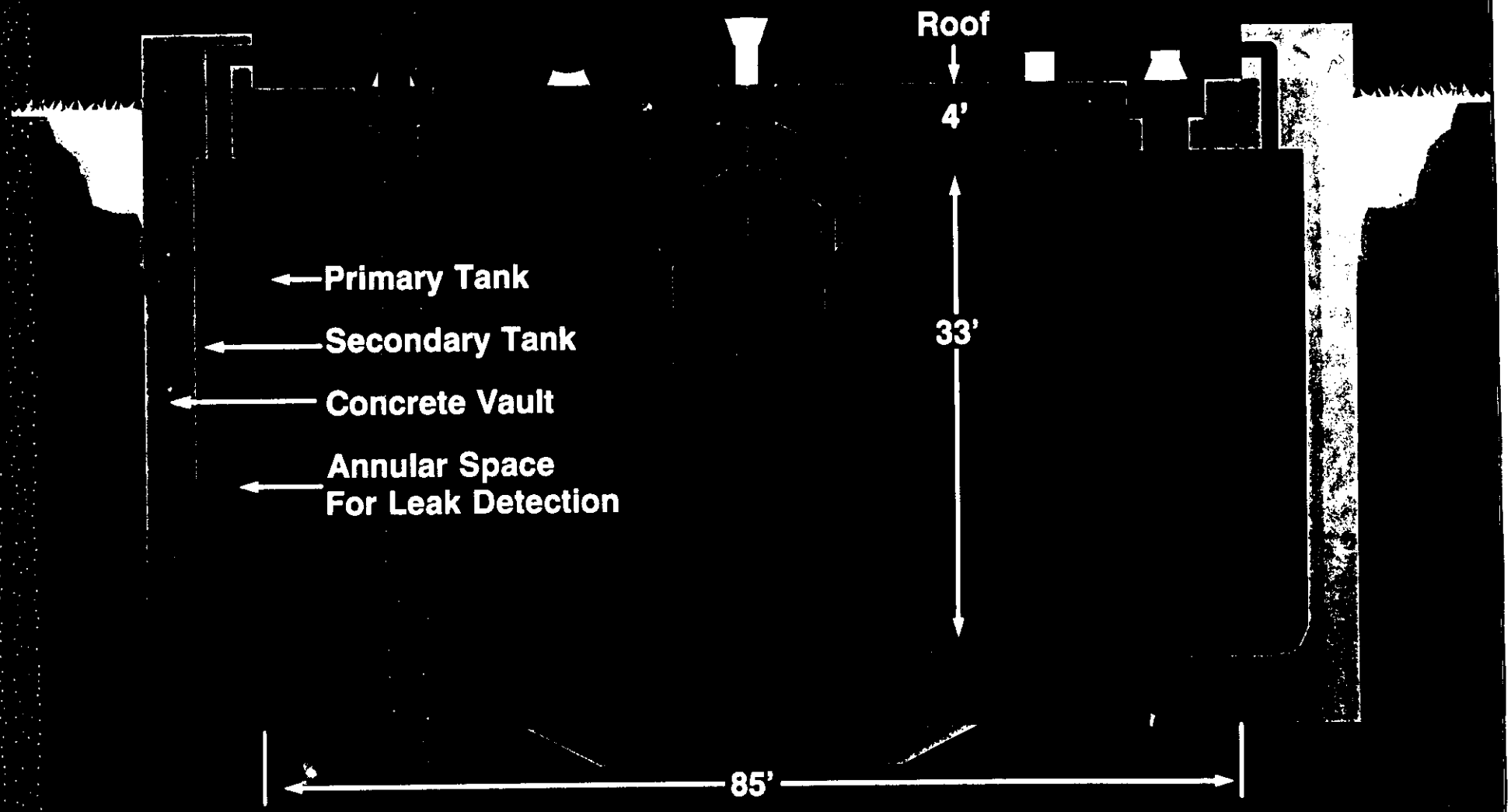

SAVANNAH RIVER SITE
WASTE CONCENTRATION

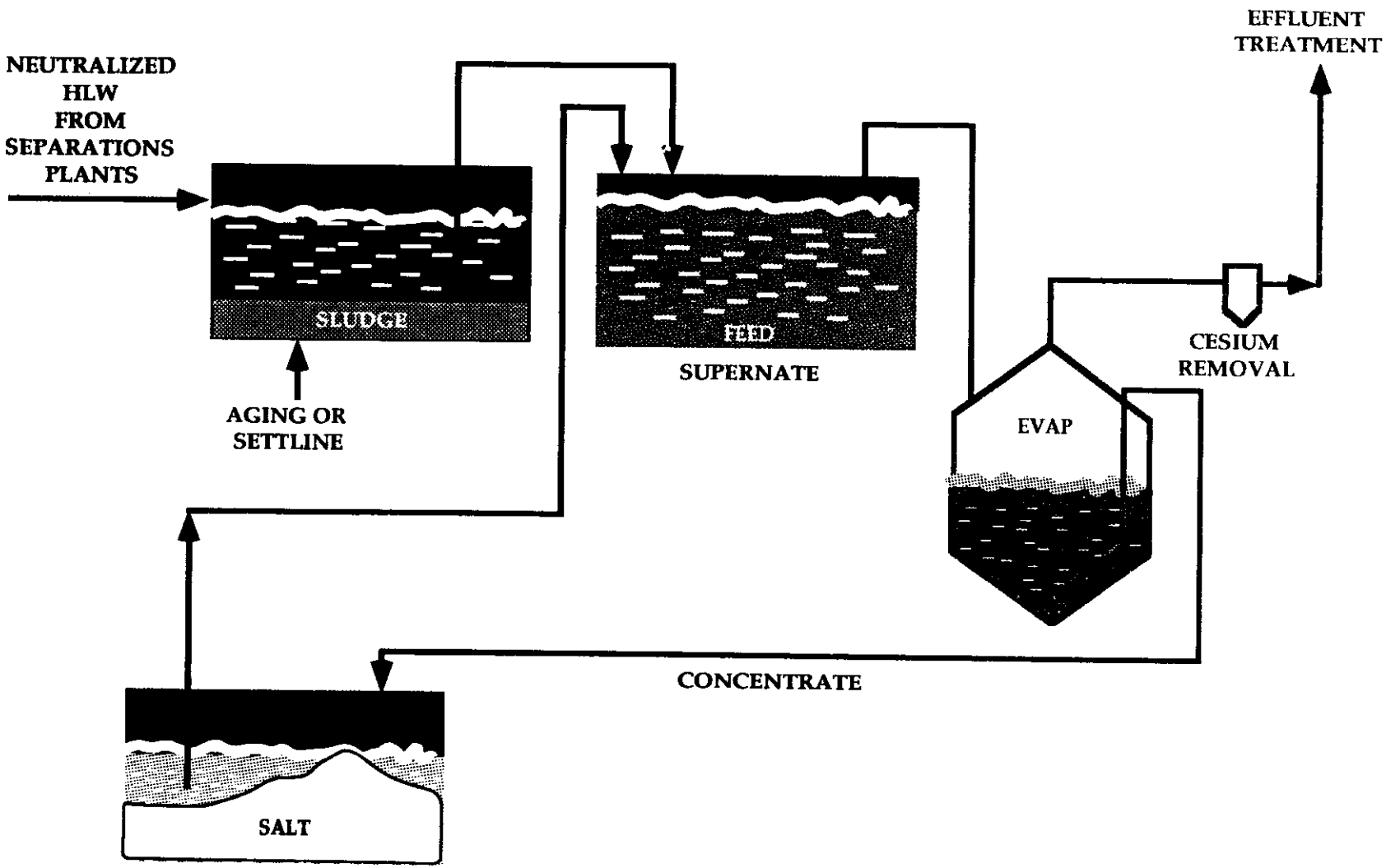

HLW Evaporator

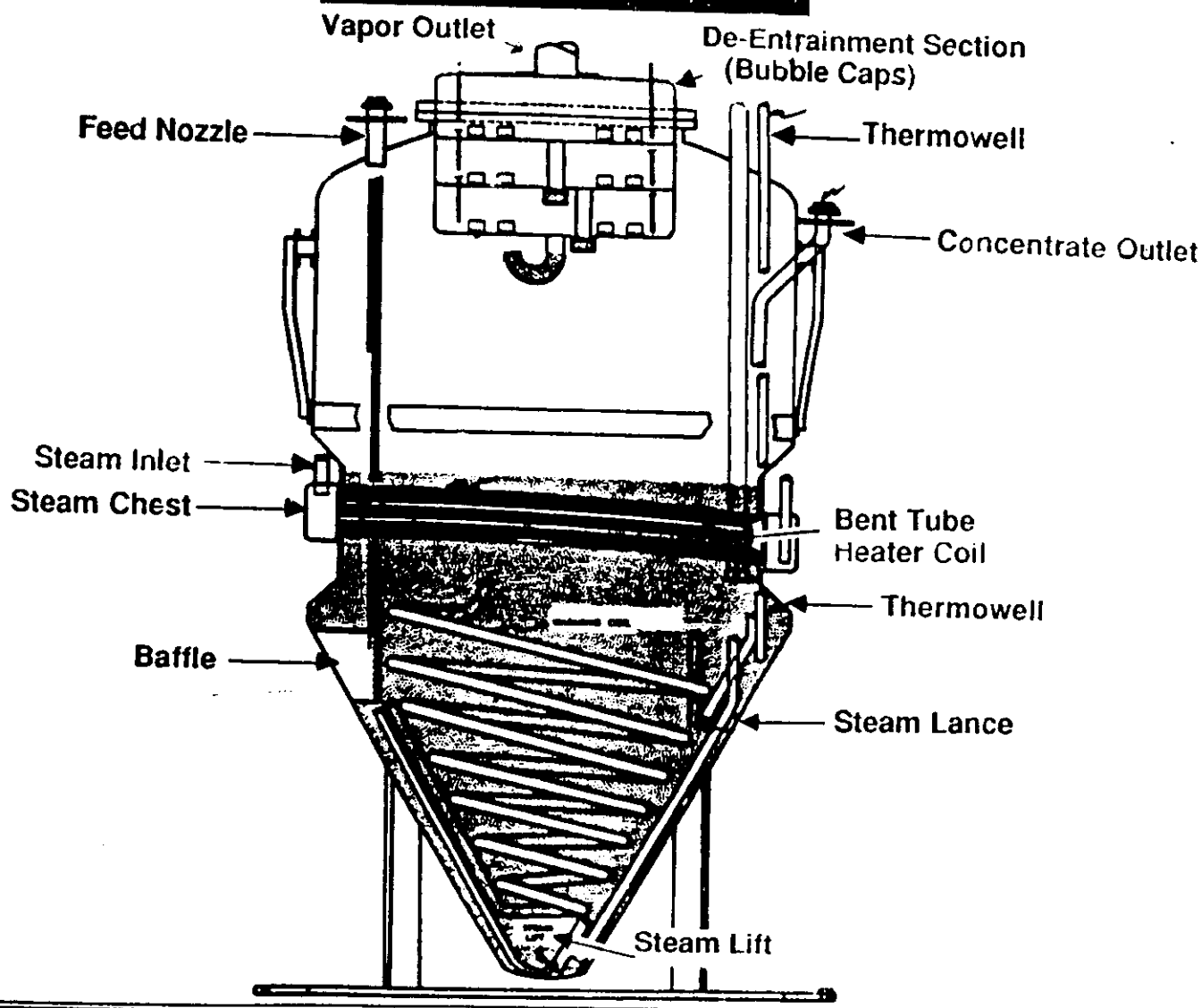

Tank Farm Evaporator Systems Summary

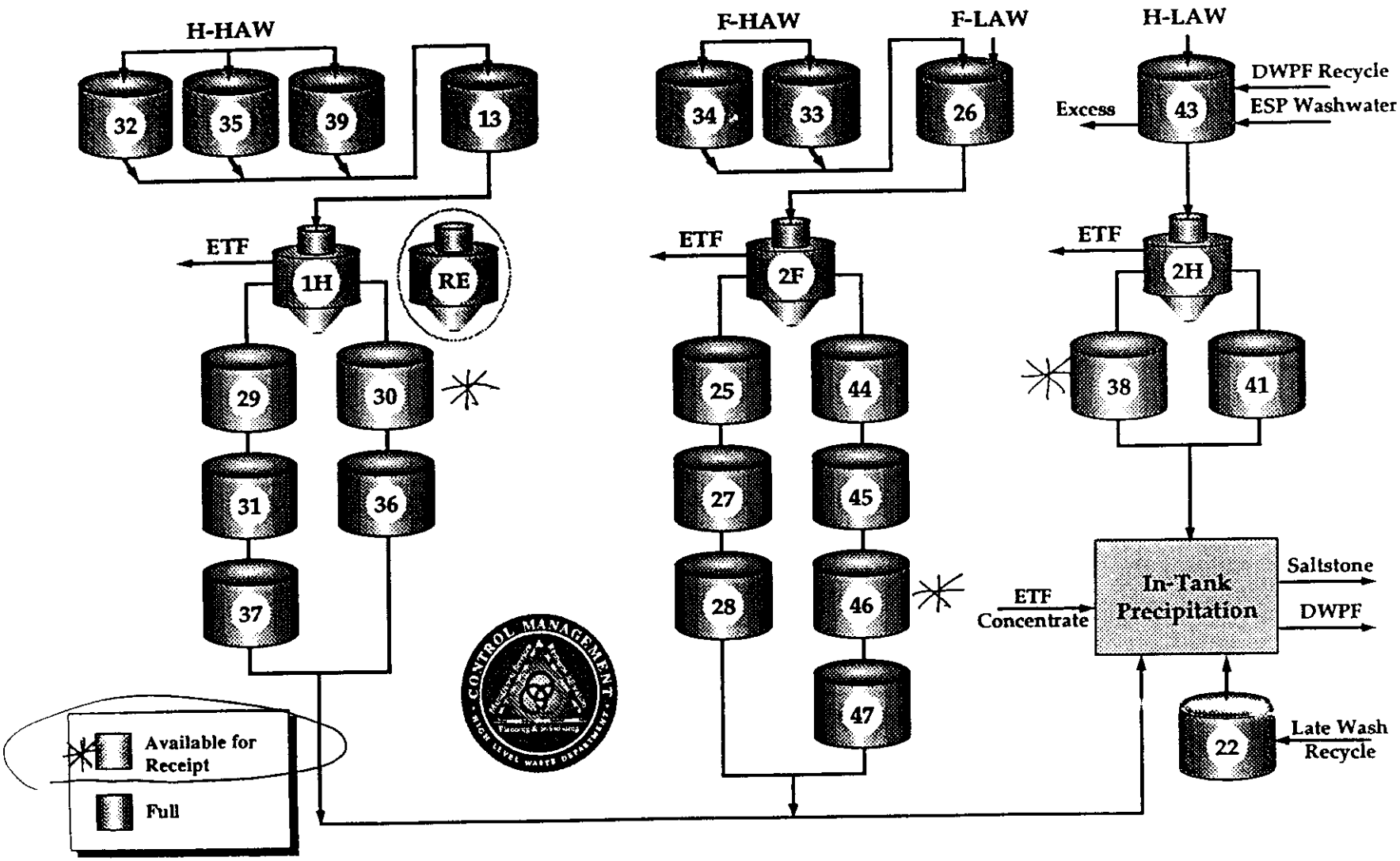

Waste Removal Process

- Long shaft slurry pumps inserted through existing risers suspended from structural steel
- Sufficient water added to dissolve salt or suspend sludge
- Tank contents are slurried
- Tank contents are sampled
- Salt transferred to salt processing tank (In-Tank Precipitation)

  Sludge transferred to sludge processing tank (Extended Sludge Processing)
- Tank inspected
- Pumps lowered
- Process repeated until tank waste removed

ITP SALT PROCESSING

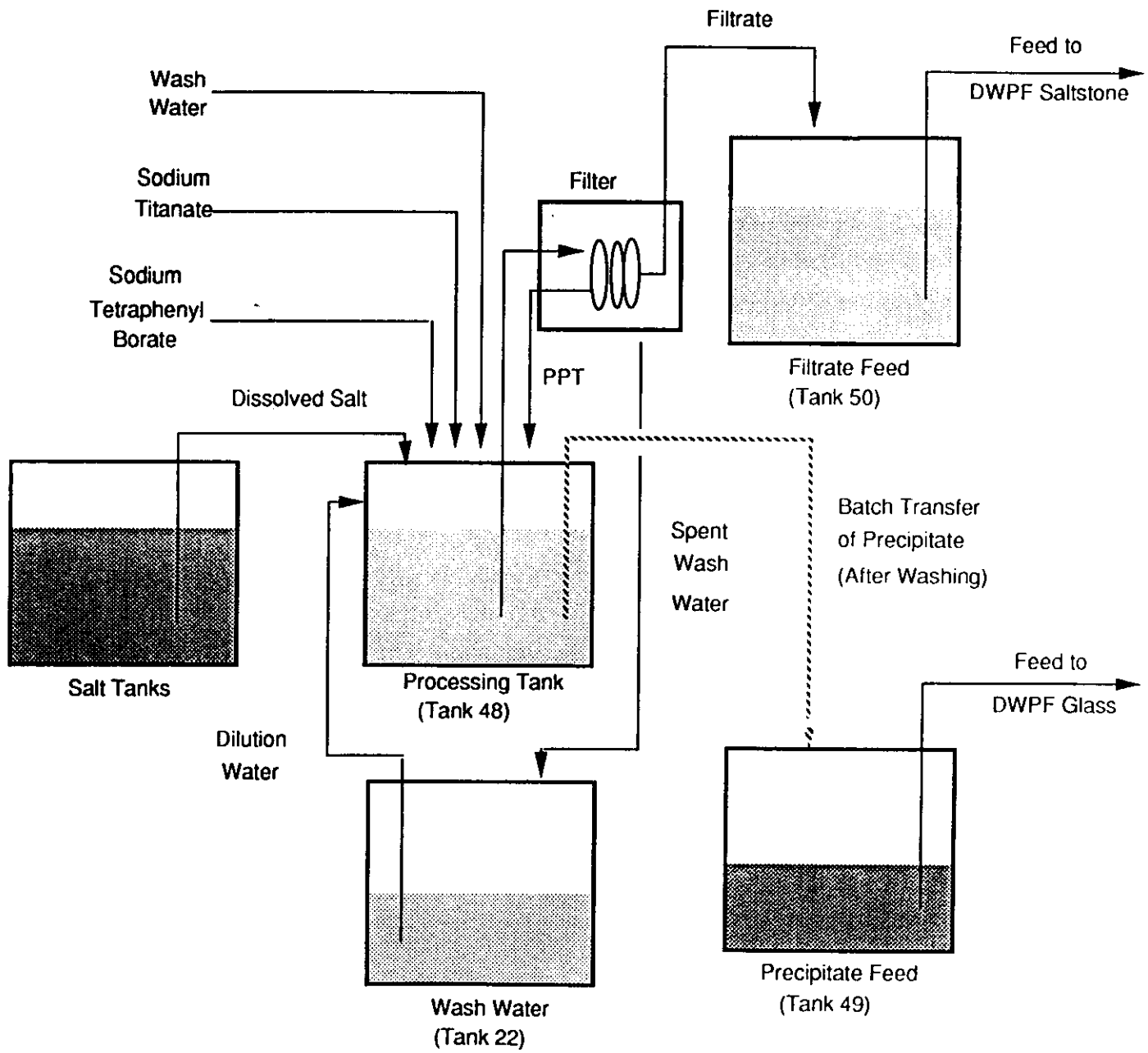

EXTENDED SLUDGE PROCESSING (ESP)

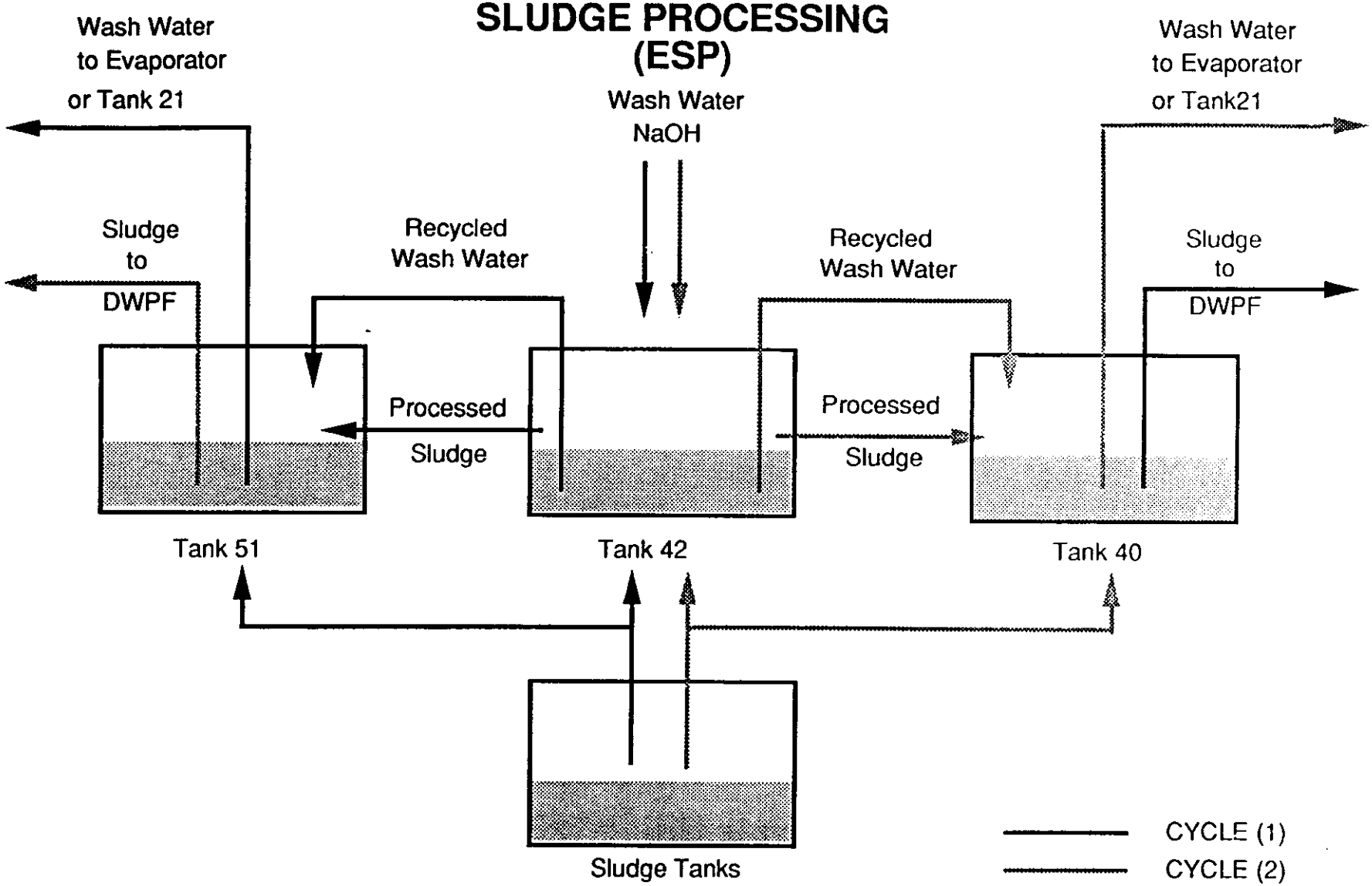

Tank 42 - Water Wash and Aluminum Dissolution
Tanks 40 and 51 - Water Wash and DWPF Feed

ESP Salt Generation

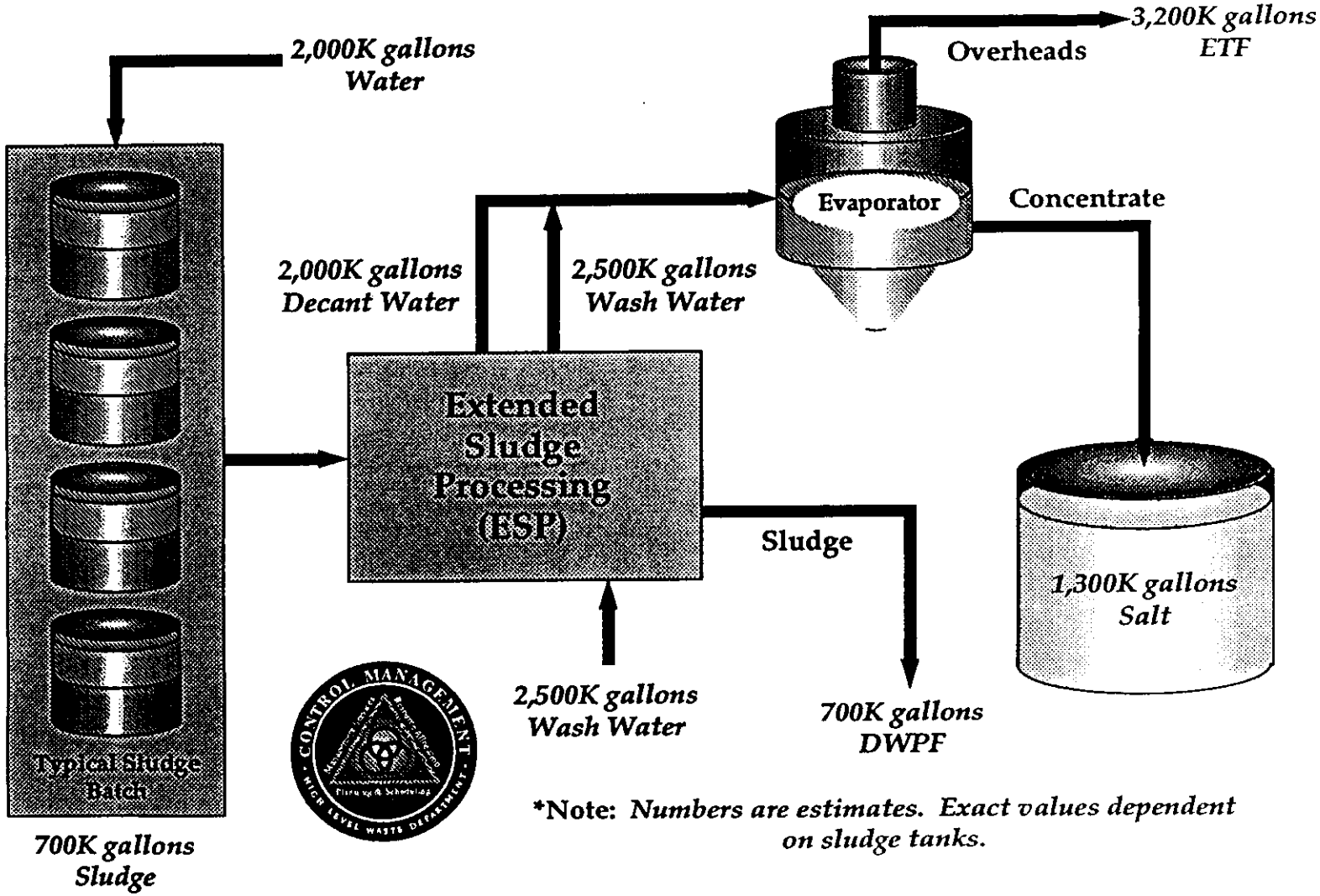

*Note: *Numbers are estimates. Exact values dependent on sludge tanks.*

Last

Westinghouse
Savannah River Company

P.O. Box 616
Aiken, SC 29802

WER-HLW-920143

October 8, 1992

Mr. C. E. Anderson, Director
Liquid Waste Division
Field Office, Savannah River
U. S. Department of Energy
P. O. Box A
Aiken, SC 29802

Dear Mr. Anderson:

TRANSMITTAL RESPONSES TO DHEC COMMENTS ON THE
TANK ASSESSMENTS FOR F AND H-AREA TANK FARMS (U)

Ref: Letter from L. E. Arrington to J. V. Odum, July 7, 1992; "Comments on Phase I and II Assessment Reports, High-Level Radioactive Waste Tank Farms"

Please find, in the attached package, responses to the comments received on the Phase I and II Tank Assessments for the F and H-Area Tank Farms from the South Carolina Department of Health and Environmental Control. These responses have been approved by Waste Management and your concurrence is requested. Your office has agreed to a five business day review and comment period, therefore your concurrence is asked for on October 14, 1992. It is also requested that any concerns regarding these comments be brought to attention as they arise.

If you have any questions or comments, please contact Roger Roosa (703-H, 7-8051) of my staff.

Sincerely,

G. T. Wright, Manager
High Level Waste Programs

MAH:mh
Att

Responses to SCDHEC Comments on Tank Assessments

2

CC (w/o attachments):

S. S. Cathey, 703-H
T. M. Monahon, 703-H
R. M. Satterfield, 773-70A
R. Roosa, 703-H
K. S. Wierzbicki, 742-6G
B. L. Lewis, 703-H
M. A. Hunter, 742-6G
W. L. Stubbs, 703-H
C. Blair-McManus, 703-H

~~FVF~~ TRFile
W-0517

WSRC-EPD Telecon Record

Subject Title : Wastewater Permitting ***Date:*** 10/8/92 ***Time:***

Purpose: To obtain clarify issues regarding permitting of the F/H Tank Farms

Call Made By: C. R. Hayes CR Hayes

Person(s) Contacted: L. E. Arrington

Discussion Notes:

Caller	Respondent
We want to reschedule the conference call that was supposed to happen yesterday. The purpose of the call was to update you on the latest schedule for responding to your comments on the Tank Assessment reports and to air our concerns over DHEC's intent for use of the waste removal schedule.	We feel there is no need for a call. We now feel that we do not need the schedule before the permit is issued. We will propose language similar to that in the FFA related to a schedule.
This means you don't need the schedule at all before issuing the construction permit.?	I would like to see a draft of the schedule for information. However it will have no bearing on the permit. A condition of the permit will probably be similar to "When DHEC determines in writing that a tank or tank system is unsuitable for use, SRS shall submit a plan for repair or removal from service".

Additional Actions Needed:
SRS to submit responses to DHEC comments on the assessments.

Distribution:
L. S. Coward, 703-18A (PFSG-File)
H. L. Davis, 703-41A
W. D. Dunaway, 703-18A
C. R. Hayes, 703-18A
M. A. Hunter, 742-6G
J. V. Odum, 742-A
G. F. Stejskal, 742-A

INTER-OFFICE MEMORANDUM
Savannah River Site

Date: 08-Oct-1992 12:39pm EDT
From: Matthew A. Hunter
HUNTER-MA-L2335 AT A1 AT SASRS2
Dept: WMRC
Tel No: x7-0520/bp# 6761

TO: Rod M. Satterfield (SATTERFIELD-RM-T3212 @A1@SLSRP1)
TO: Kim S. Wierzbicki (WIERZBICKI-KS-O6535 AT A1 AT SASRS2)

CC: Chuck Hayes (HAYES-CR-Z9722 @A1@SLSRP1)

Subject: FYI - Line Terminations

INTER-OFFICE MEMORANDUM
Savannah River Site

Date: 08-Oct-1992 11:26am EDT
From: Jeff Pike
PIKE-JA-Y5547 AT A1 AT SASRS2
Dept: WMT
Tel No: x7-8843

TO: See Below

Subject: Transfer Line Terminations

The following attachment inventories the terminations in the tank farms that may cause trouble with negotiations with SCDHEC for a wastewater permit.

Distribution:

TO:	Matthew A. Hunter	(HUNTER-MA-L2335 AT A1 AT SASRS2)
CC:	James S. Clemmons	(CLEMMONS-JS-B5806 AT A1 AT SASRS2)
CC:	L.H. Aiken	(AIKEN-LH-O5403 AT A1 AT SASRS2)
CC:	Mike Rea	(REA-MJ-O8913 AT A1 AT SASRS2)
CC:	Russell E. Nordstrom	(NORDSTROM-RE-Y5081 AT A1 AT SASRS2)
CC:	PAUL D. D'ENTREMONT	(D'ENTREMONT-PD-O5438 AT A1 AT SASRS2)
CC:	SUSAN S. CATHEY	(CATHEY-SS-O4949 AT A1 AT SASRS2)
CC:	TOM MONAHON	(MONAHON-TM-O4411 @A1@SRXSS2)
CC:	Michael W. Lewis	(LEWIS-MW-O3712 AT A1 AT SASRS2)
CC:	Brenda L. Lewis	(LEWIS-BL-O6503 AT A1 AT SASRS2)
C:	Michael C. Chandler	(CHANDLER-MC-O6868 AT A1 AT SASRS2)

COMMENT :
COMMENT :
TOP

Transfer Line Termination at Diversion Boxes and Pump Pits

SCDHEC's comments on the Phase II Tank Assessment Report which SRS submitted to them as part of the Wastewater Permit Application for the Tank Farms, question the conclusion that secondary containment exists all the waste transfer lines. There comments implied that they disagreed with the assessments conclusion that secondary containment as defined in the draft FFA exists despite certain transfer line core pipes at diversion boxes and pump pits continue though the concrete wall without the secondary pipe. In other words the core pipe is embedded in the concrete wall. The response to the comment is not expected to be accepted. Therefore, in preparation for deciding what to do about these terminations, I prepared with the assistance of Len Aiken, Steve Clemmons, Mike Rea, and Russ Nordstrom an inventory of all locations effected.

The inventory is sorted by Area first and then by termination location, i.e. diversion box and pump pits. Some gaps still exist but work is continuing to determine the exact construction used.

Summary of Inventory

F-Area

FDB1 Four terminations w/o continuos secondary pipe
FDB2 and PP1 All terminations w/o continuos secondary pipe
FDB3 All terminations w/o continuos secondary pipe
FDB4 and PP2-3 No terminations w/o continuos secondary pipe (a few are indeterminate)
FDB5 Indeterminate
FDB6 Indeterminate

H-Area

HDB1 All lines are Type I, no concerns
HDB2 and PP1-4 Two terminations w/o continuos secondary pipe, two indeterminate
HDB3 No terminations w/o continuos secondary pipe
HDB4 All terminations w/o continuos secondary pipe
HDB5 All terminations w/o continuos secondary pipe
HDB6 No terminations w/o continuos secondary pipe
HDB7 No terminations w/o continuos secondary pipe
HDB8 and PP7-10 No terminations w/o continuos secondary pipe
HPP5-6 Indeterminate

F-Area

FDB1

Type I transfer lines, concrete encased lines, are not of concern because a leak in a pipe embedded in the concrete would leak to the box or the concrete encasement. This system provides secondary containment.

Type II transfer lines, pipe within a pipe design, that terminate at this diversion box all terminate the secondary pipe at the wall

of the box (reference W700385). These lines are identified in the Wastewater Permit Application as lines 114, 104, and two future tie ins.

FDB2 and PP1

All transfer lines (Type II) that terminate at FDB2 and PP1 terminate the secondary pipe at the wall of the box (reference W705748, W706315, and W706491). MLDB were installed at these locations without adding a sleeve through the concrete wall.

FDB3

All transfer lines (Type II) that terminate at FDB3 terminate the secondary pipe at the wall of the box (reference W238427).

FDB4 and PP2-3

All transfer lines (Type II) that terminate at FDB2 and PP1 continue the secondary pipe through the wall of the box (reference W701347, W700839, and W701669) except for the currently indeterminate terminations on FDB4 nozzles 7, 8, and 9 and PP3 nozzles 1 and 2. Print W700840 probably shows the details, but was unavailable at the time of this report.

FDB5

Terminations on FDB5 are indeterminate because the lack of details on the prints reviewed. Russ Nordstrom is continuing the review.

FDB6

Terminations on FDB6 are indeterminate because the lack of details on the prints reviewed. Russ Nordstrom is continuing the review.

H-Area

HDB1

Type I transfer lines, concrete encased lines, are not of concern because a leak in a pipe embedded in the concrete would leak to the box or the concrete encasement. This system provides secondary containment.

HDB2 and PP1-4

Type I transfer lines, concrete encased lines, are not of concern because a leak in a pipe embedded in the concrete would leak to the box or the concrete encasement. These lines are identified in the Wastewater Permit Application as lines 24, 23, 22, 21, 20, 19, unconnected, and 18 (nozzles 9, 10, 11, 12, 13, 14, 15, and 16 - reference W163385).

Lines 9E and 8E - Nozzles 25 and 26 are indeterminate. Review is continuing.

The following Type II transfer lines that terminate at this diversion box and terminate the secondary pipe at the wall of the box, are identified in the Wastewater Permit Application as lines 25 and 26 (nozzles 24 and 23 - reference W163385, W704574, and W702642).

The following Type II transfer lines that terminate at this diversion box and continue the secondary pipe through the wall of the box, are identified in the Wastewater Permit Application as lines 28, 29, 30, 31, no connection, no connection, 3069, and 3068 (nozzles 21, 20, 19, and 18 - reference W163385, W702978, D149892, and D149891 - nozzles 28, 29, 30, and 31 - reference W702978)

HDB3

All transfer lines (Type III) that terminate at HDB3 continue the secondary pipe through the wall of the box and drain into DB3 (reference S5-2-1341).

HDB4

All transfer lines (Type II) that terminate at HDB4 terminate the secondary pipe at the wall of the box (reference W236663).

HDB5

All transfer lines (Type II) that terminate at HDB4 terminate the secondary pipe at the wall of the box (reference S5-2-4261).

HDB6

All transfer lines (Type II) that terminate at HDB6 continue the secondary pipe through the wall of the box (reference W700207).

HDB7

All transfer lines (Type II) that terminate at HDB7 continue the secondary

pipe through the wall of the box (reference W702541, W702542).

HDB8 and PP7-10

All transfer lines (Type II) that terminate at HDB8 continue the secondary pipe through the wall of the box.

HPP5 and 6

Terminations on HPP5 and 6 are indeterminate because the lack of etails on the prints reviewed. The review is continuing.

CC: RR Campbell
JS Roberts
Jerry Stepskal
Charlie Sherman
Mary Flora
Sandra Moreno
DOE-ECD received this today
Jim Toth 10/20/

State of South Carolina

Office of the Governor

CARROLL A. CAMPBELL, JR.
GOVERNOR

POST OFFICE BOX 11369
COLUMBIA 29211

October 6, 1992

The Honorable James D. Watkins
Secretary of Energy
Department of Energy
Washington, D. C. 20585

Dear Jim:

As you know, the Department of Energy, the State of South Carolina, and the Environmental Protection Agency have been negotiating a Federal Facilities Agreement for the Savannah River site. The Agreement, in accordance with CERCLA requirements, is intended to ensure effective and efficient clean-up at SRS.

Negotiations over the Agreement have reached a criticial point and are threatening to break down. Two crucial issues are the retention of South Carolina's RCRA regulatory authority and the degree to which DOE will commit to provide funding for remedial actions at SRS.

The Agreement should explicitly acknowledge South Carolina's authority under RCRA. South Carolina has worked hard to obtain delegated authority to implement hazardous waste regulations and has exercised this responsibility for several years. Any action which would jeopardize exercise of this authority, including its exercise at the Savannah River Site, is not acceptable.

With regard to funding, I believe that the Federal Facilities Agreement should consitute an enforceable commitment by DOE to supply effort and resources to address the environmental concerns resulting from past SRS operations. DOE should agree to clean up the site as part of the national effort.

I believe that South Carolina, DOE, and EPA can continue to work together in mutual cooperation to advance our common interests. I do not believe that the issues we have raised are inconsistent with the interests of DOE.

I look forward to your support so that the real work of remediating the environment at the SRS can proceed expeditiously.

Sincerely,

Carroll A. Campbell, Jr.
Governor

CACjr/tad

State of South Carolina

Office of the Governor

CARROLL A. CAMPBELL, JR.
GOVERNOR

POST OFFICE BOX 11369
COLUMBIA 29211

October 6, 1992

William K. Reilly, Administrator
U. S. Environmental Protection Agency
401 M Street, SW
Washington, D. C. 20460

Dear Bill:

As you know, US EPA Region IV, the South Carolina Department of Health and Environmental Control (DHEC), and the US Department of Energy have been negotiating a Federal Facilities Agreement for the Savannah River Site. The negotiations have reached a critical point. DOE is in disagreement with both South Carolina and EPA over the retention of South Carolina's RCRA regulatory authority and the degree to which DOE will commit to provide funding for remedial actions.

I appreciate the support your staff has given the State of South Carolina in its efforts to secure an agreement which will protect South Carolina's delegated authority and ensure DOE's allocation of cleanup funds to SRS. This support is an excellent example of the State-Federal partnership which is essential for the protection of South Carolina's environment. Thank you for the assistance EPA has given us in the past and for your continued support in this process.

Sincerely,

Carroll A. Campbell, Jr.
Governor

CACjr/tad

State of South Carolina

Office of the Governor

CARROLL A. CAMPBELL, JR.
GOVERNOR

OFFICE OF EXECUTIVE
POLICY AND PROGRAMS

FAX TRANSMISSION COVER SHEET

TO: Jim Gaver

AGENCY: DOE - SRS

FAX #: 725.4657

FROM: Beth Partlow

DATE: 10/19/92

TOTAL NUMBER OF PAGES INCLUDING COVER SHEET: 4

COMMENTS: letters mailed Friday, 10/16/92

THE DIVISION OF NATURAL RESOURCES
1205 PENDLETON STREET, SUITE 333
COLUMBIA, SOUTH CAROLINA 29201
TELEPHONE: 803-734-0543
FAX: 803-734-0356

W05171

INTER-OFFICE MEMORANDUM
Savannah River Site

Date: 30-Sep-1992 07:04am EDT
From: TIMOTHY P. GAUGHAN
GAUGHAN-TP-08815 AT A1 AT SASRS2
Dept: WMO
Tel No: 78088

TO: See Below

Subject: ITP/ESP Environmental Permit Status

Please find below a summary/status of pertinent Federal, State and Local environmental permits/issues concerning the Extended Sludge Processing (S-2081) and In-Tank Precipitation (S-1588 & S-3781) facilities.

EXTENDED SLUDGE PROCESSING (ESP) - PROJECT S-2081

1. National Env Policy Act (NEPA)

- An Environmental Evaluation Checklist (NMP-WMP-92-4504, 3/6/92) has been prepared and forwarded to the appropriate organizations. A response from the SRS-NEPA group (ESH-NEP-92-0209, 6/11/92) was received stating no further documentation was required for restart of the ESP facility.

2. Resource Conservation and Recover Act (RCRA)

- The current RCRA Part A Interim Status Permit for the F/H High Level Waste Tank Farms (Memorandum: Wright-DOE to Tobin-EPA, 6/30/87) will cover radioactive restart activities for the ESP process. This permit will continue to govern the ESP facility until the SCDHEC Industrial Wastewater Treatment Permit for the F/H Tank Farms is issued (See ITP Permits for more SCDHEC Wastewater info.)

3. National Emission Standard for Hazardous Air Pollutants - Radionuclides

- Evaluations of radionuclide emissions from the ESP process have been performed by WME (WER-WMH-920316 REV 1, 6/3/92) and SRTC (SRT-ETS-920133, 6/9/92). Results of these studies have been evaluated by the Env Protection Department (EPD) who issued a memo (ESH-ESS-920444, 8/4/92) stating no further studies, permitting, or monitoring equipment is necessary on ESP tanks. Periodic confirmation of radionuclide emissions will be required.

4. Mercury Emissions from ESP

- Two SRTC studies (SRT-LWP-92-050, 5/12/92 & SRT-ETS-920121, 6/1/92) have indicated that ~ 1.47 lbs Hg/yr will be emitted from the ESP process and this will contribute a concentration of 5.0x10E-16 ug/m3 at the SRS boundary. This information has been forwarded (ESH-ESS-920347, 6/17/92) to the South Carolina Dept of Health and Env Control (SCDHEC) to determine if any additional permitting is required. The SCDHEC Air Toxic Std for mercury at the SRS boundary is 0.25 ug/m3.

5. SCDHEC Domestic Water Permit

- The ESP facility is covered by the existing SCDHEC Domestic Water Permit for the F/H Tank Farms (SCDHEC Permit #405556, 4/21/88).

6. National Pollutant Discharge Elimination System (NPDES)

- The ESP facility is covered under the existing NPDES permit (#SC0000175, 7/1/88) for SRS. Run-off from the facility will be routed to Outfall #H-07 or diverted to the H-Area Retention Basin (#H-17). Note that the ESP process has no planned liquid discharges/releases.

7. SCDHEC Sanitary Wastewater Permit

- The ESP facility is covered by the existing SCDHEC Sanitary Wastewater Permit (SCDHEC #11442, 8/4/87).

* For more information on the ESP permitting history/status - please see "Environmental Permits for the ESP Facility" (WER-WMH-920367, 6/29/92).

IN-TANK PRECIPITATION FACILITY (ITP) - PROJECT S-1588/S-3781

1. SCDHEC Industrial Wastewater Treatment Permit

- WSRC submitted permit application to SCDHEC (ESH-FSG-910532, 7/8/91).

- SCDHEC provided comments to application (ESH-FSG-92-0269, 4/15/92).

- WSRC responded to SCDHEC comments (ESH-FSG-92-0284, 5/1/92).

- SCDHEC sent WSRC application comments made by EPA (Memorandum: Arrington-SCDHEC to Odum-WSRC, 7/7/92).

- WSRC preparing responses to EPA comments. Expected to submit responses to SCDHEC ~ Oct/Nov 1992.

- Due to the inability of the ITP facility to comply with the current RCRA VOC Emission regulation (40 CFR 265.1032) - the ITP process CANNOT begin radioactive operations until SCDHEC provides an approved Industrial Wastewater Permit for the F/H Tank Farms. This point is reflected in the ITP startup schedule.

2. SCDHEC Air Quality Permit - Benzene Emissions

- Construction Permit issued for ITP facility (SCDHEC#0080-0046-CD, 5/15/86) to emit ~ 38 tons/yr.

- Per SCDHEC request, revised emission figures (~ 23 tons/yr) were forwarded to SCDHEC (ESH-ESG-910157, 4/1/91).

- WSRC notified SCDHEC of Cold Chemical operation of ITP process

(ESH-ESS-920379, 7/6/92).

- Benzene Monitoring Program established for ITP process (WER-WMH-92-0188, 4/27/92).

- SCDHEC inspection of ITP facility (9/17/92). No issues raised during inspection regarding benzene emissions. SCDHEC expected to return to ITP in ~ 2 months to "thoroughly evaluate" the system's benzene monitoring program. Benzene emissions from the ITP process will be incorporated into an Air Quality Control Permit for the entire H-Area to be issued by SCDHEC in 1993.

3. Mercury Emissions

- Two studies were completed (M-CLC-H-00226, 5/14/92 & SRT-ETS-920095, 5/21/92) that indicated the ITP process will emit ~ 4.8 lbs Hg/yr which correlates to an offsite concentration of 9.2x10E-16 ug/m3. This information was forwarded to SCDHEC to determine if any additional data was necessary. The SCDHEC Air Toxic Std for mercury is 0.25 ug/m3 at the site boundary.

4. NESHAP Radionuclide Permit

- Permit to release radionuclide issued by EPA for DWPF/ITP (EPA# 4APT-AC, 4/25/88).

- SRTC/WME study completed (SRL-ETS-9200239, 6/5/90) that indicated offsite concentration attributed to the ITP process is ~ 4.3x10E-4 mrem/yr. EPA limit is 0.1 mrem/yr.

- Sampling and Analytical Protocol for ITP submitted to EPA (ESH-ESG-920300, 5/22/92).

- S&A Protocol for ITP approved by EPA (ESH-BCB-92016, 7/27/92).

5. NESHAP Benzene

- Regulation deemed 'Not Applicable' by DOE-SR ("Position Paper on NESHAP Benzene Issue", Turner to Messick, 12/21/90).

6. SCDHEC Air Quality Control Permit - Diesel Generator (241-4H)

- Construction permit for Diesel Generator opacity limit issue by SCDHEC (SC#0080-0046-CE, 3/31/86).

- Generator yet to be placed in operation.

7. SCDHEC Air Quality Control Permit - Diesel Fire Pumps (241-125H)

- Construction permit for Diesel Fire Pumps opacity limit issued by SCDHEC (SC#0080-0042-CI, 3/15/92).

- Notified SCDHEC that Construction complete (ESH-ESC-920050, 1/23/92).

- Permission to operate granted by SCDHEC (WER-WMT-920064, 1/21/92).

- SCDHEC inspection of Fire Pumps on 9/17/92.

8. NEPA Documentation for ITP

- Memo-To-File issued for Tank 48 and 49 modification for ITP process (DOE Memorandum "Compliance with NEPA - ITP, Tank 48, Savannah River Plant", 6/15/84).

- Supplement to MTF for benzene emissions issued (DOE Memorandum "ITP, Tank 48 - SRP - Compliance with NEPA", 4/18/85).

- Categorical Exclusions for Stripping Columns/Nitrogen System issued (Memorandum: "NEPA Env Evaluation - ITP Safety and Env Enhancement Project S-1588", 3/28/89).

- Categorical Exclusion issued for ITP Fire Suppression system (Memorandum: "NEPA Env Evaluation - Fire Suppression ITP 241-H Project S-1588" 4/2/89).

- Per DOE-HQ memo ("NEPA Determination for DWPF at SRS" Ziemer to Duffy, 10/12/90) - no further documentation required.

9. Tank 50 - SCDHEC Wastewater Permit

- SCDHEC Operating Permit issued (SC # 14520, 9/12/88).

10. H-Z Inter-Area Line - SCDHEC Wastewater Permit

- SCDHEC Operating Permit issued (SC # 14338, 9/12/88).

11. Domestic Water Permits

- Operating Permit for ITP Filter/Stripping facilities issued by SCDHEC (SC # 40556, 11/22/85).

- Construction Permit for ITP Fire Suppression System issued by SCDHEC (SC # LS91005, 5/21/91).

12. Sanitary Wastewater Permit (607-7H)

- Operating Permit issued by SCDHEC (SC#11442, 2/4/87).

13. National Pollutant Discharge Elimination System (NPDES) Outfalls

- Outfalls that accept releases from the ITP facility (#H-17, #H-7)

have been permitted (#SC0000175, 9/24/88) per the SRS NPDES permit.

14. Benzene Abatement Project

- Design Review Team commenced on 6/10/92.

- Functional Design Criteria (M-FDC-H-00023) issued on 8/7/92.

15. ITP Filter Disposal Program

- Functional Performance Requirements issued (WER-WMP-92-2236, 6/18/92).

- Functional Design Criteria issued for Design Review (M-FDC-G-00024, 8/27/92).

- Request for "Treatability Variance" submitted to EPA (WSRC-RP-91-777, 1/10/92).

- EPA approval of a "Treatability Variance" is a requirement for radioactive operations at the ITP facility.

** Further information on ITP Env Permitting can be found in #NMP-WMT-910919.

If anyone has questions or comments on any of the above permits/issues I can be reached at 7-8088.

Distribution:

TO:	Donald Thaxton	(THAXTON-GD-O5806 AT A1 AT SASRS2)
TO:	Charles G. Lampley 7-8550	(LAMPLEY-CG-O6174 AT A1 AT SASRS2)
TO:	Barbara J. Clark	(CLARK-BJ-L2439 AT A1 AT SASRS2)
TO:	Bill Van Pelt	(VANPELT-WB-O7016 AT A1 AT SASRS2)
CC:	Lori S. Coward	(COWARD-LS-Z6459 @A1@SLSRP1)
CC:	MONTE HAWKINS	(HAWKINS-M-O6779 @A1@SLSRP1)
CC:	Kathy Z. Wolf	(WOLF-KZ-O9884 AT A1 AT SASRS2)
CC:	Don W. Harrison, 241-121H 7-1841	(HARRISON-DW-O5049 AT A1 AT SASRS2)
CC:	BRUCE E. LONG	(LONG-BE-O6070 AT A1 AT SASRS2)
CC:	Michael J. Augeri	(AUGERI-MJ-C8666 AT A1 AT SASRS2)
CC:	Gary O. Percival	(PERCIVAL-GO-L2214 @A1@SLSRP1)
CC:	Douglas F. Brown	(BROWN-DF-O7607 AT A1 AT SASRS2)
CC:	Jacob S. Park	(PARK-JS-L1898 @A1@SLSRP1)
CC:	DAVID G. COLLINS	(COLLINS-DG-Y4647 @A1@SLSRP1)
CC:	Lori M. Chandler	(CHANDLER-LM-O6554 @A1@SLSRP1)
CC:	Lynn V. Ehrke	(EHRKE-LV-L3702 AT A1 AT SASRS2)
CC:	Mario A. Ceravolo, 703-H	(CERAVOLO-MA-O7495 AT A1 AT SASRS2)
CC:	R.A. Stokes	(STOKES-RA-Y4466 @A1@SLSRP1)
CC:	Chi L Leung	(LEUNG-CL-O8827 AT A1 AT SASRS2)
CC:	William E. Phillips, Jr.	(PHILLIPS-WE-O9866 AT A1 AT SASRS2)
CC:	Ernest D. Lee	(LEE-ED-L2755 AT A1 AT SASRS2)
CC:	D.A. Pervis	(PERVIS-DA-O5645 AT A1 AT SASRS2)
CC:	John P. Wood	(WOOD-JP-O8698 AT A1 AT SASRS2)
CC:	CARY B. STEVENS	(STEVENS-CB-O5981 AT A1 AT SASRS2)

Fori Coward W-0517 W-0468

WSRC-EPD TELECON RECORD

SUBJECT DWPF COLD CHEMICAL RUN RECYCLE STREAM DISPOSAL

DATE 9/24/92

TIME 9:30 A.M.

PURPOSE UPDATE SCDHEC ABOUT CHANGES IN DISPOSAL PLANS

CALL MADE BY W.L. PAYNE, C.R. HAYES, K.Z. WOLF, B.R. DAMANI, A.L. TOWNS, G.S. HOOVER

PERSON CALLED L. E. ARRINGTON, SCDHEC-COLUMBIA **OF** WSRC/DOE

DISCUSSION NOTES

CALLER

- *Instead of sending the cold chemical run recycle stream to the Tank Farm as described in the Addendum approved by SCDHEC, we plan to send it to Horse Creek Valley POTW in North Augusta. Horse Creek will be sending a pretreatment permit application to Beau McGaughey of SCDHEC for approval for the more concentrated wastewater to be generated later. Until then, Horse Creek intends to accept the wastewater as "Scavenger Waste" without a permit. We plan to send a modified Addendum to you for approval. Will this process be adequate, or will you require additional information?*

RESPONDENT

- *Please handle it in the following way:*

Send the modified Addendum to me for approval along with all of the following information:

1- A cover letter describing the change in disposal plans to include why, how the waste-water will be transported, where, lab characterization, and any other pertinent information. Also describe how all of the appropriate permits will be affected (Tank Farm, DWPF, etc.). In addition, describe how the wastewater will be handled as Scavenger Waste at first, and then disposed under a pretreatment permit later.
2- A copy of the acceptance letter from Horse Creek (to SCDHEC or SRS?) for this wastewater.

- *I will talk to Beau McGaughey in the domestic wastewater branch and make sure we communicate during the permitting process. When she receives the application, she will forward it to me for review.*

ADDITIONAL ACTIONS REQUIRED

SEND MODIFIED ADDENDUM AND COVER LETTER TO DHEC

DISTRIBUTION: *C. R. Hayes, 703-18A*
G. S. Hoover, 703-41A
H. L. Davis, 703-41A
A. L. Towns, 704-S
K. Z. Wolf, 704-15S
B. R. Damani, 704-15S

INTER-OFFICE MEMORANDUM
Savannah River Site

Date: 08-Sep-1992 01:02pm EDT
From: Mary E. Johnson
JOHNSON-ME-W8738
Dept: EPD
Tel No: X53849

TO: Chuck Hayes (HAYES-CR-Z9722)

Subject: TANK FARM

Chuck,

Please take a look at this and let me know if you are aware of anything in the WW permit that would force the tanks to comply with RCRA seismic criteria. I will also check with Gerry about requirements of the FFA.

Thanks,

Mary

INTER-OFFICE MEMORANDUM
Savannah River Site

Date: 07-Sep-1992 01:57pm EDT
From: Glenn R. Beaumier
BEAUMIER-GR-L0197
Dept: Systems Engr. E2000
Tel No: 706-821-7778

TO: See Below

Subject: Seismic Criteria for Tank Farm Design

The purpose of this AIO is to determine what seismic Peak Ground Acceleration (PGA) should be used for new tank farm designs and modifications of existing designs.

BACKGROUND:

The proposed Federal Facilities Agreement (FFA) for the tank farms will allow SRS to operate the high level radioactive waste tank system without a RCRA Part B permit. This agreement will allow the SRS tank farms to operate with an industrial wastewater treatment permit, but will force RCRA-like design criteria on our facility designs. (We currently operate the tank farms under interim status, a RCRA Part A permit).

As far as design criteria goes, the FFA contains almost all the RCRA design constraints contained in South Carolina Hazardous Waste Management Regulations (SCHWMR) R.61-79.264. (IE, double containment, corrosion protection, installation requirements, leak detection, etc.).

The FFA has not been signed by all parties, and may change significantly before being issued. New tank farm designs are going forward assuming the FFA will be signed without any modifications. If this assumption fails, designs may have to be significantly modified to reflect new requirements.

As far as RCRA goes, this may not be a big problem. Many of the design requirements in RCRA are in the FFA, and hence, are in the designs.

One area this is not true is location standards. South Carolina Regulation R.61-104, Hazardous Waste Management Location Standards, Section IV.A.1.b contains some seismic criteria. The boil down of the legalese in this section is that designs must maintain containment of hazardous materials up to a 0.15 PGA.

DOE requires that some segments (High Hazard) be designed for

0.20 PGA, so again, we are safe there. However, most areas

(Moderate and Low-Hazard) are designed for only 0.11 PGA. An example might be high level waste transfer lines. Right now, we would design them to 0.11 PGA. RCRA would impose 0.15 PGA.

PROBLEM:

It appears that the FFA authors did not consider R.61-104 when writing the FFA. This was probably due to the fact that the location standards did not exist at the time.

What should the designs do?

Option 1. We design for 0.15 PGA, which supports the following;

- If the FFA fails and we need to obtain a RCRA Part B, the designs will be defensible.

- If location standards (R.61-104) are incorporated as part of the public comment period, our designs will be defensible.

- Following the seismic portion of R.61-104 fulfills the FFA intent to follow the facility design criteria in RCRA regulations.

TOLD MARY ON 9/8 THAT MATT HUNTER AND I FELT THAT THIS IS DEFINATELY THE RIGHT OPTION. CDH

Option 2. We design most of the tank farm additions and modifications for 0.11 PGA (low and moderate hazard segments);

- The FFA is silent on the seismic issue, so we are free to follow only DOE requirements.

SCHEDULE:

This issue needs to be resolved this week. Projects are headed into validation in a few weeks, and this decision will become part of the controlled technical baseline for projects 2081, 2860, and 3025 (Waste Removal)

Please forward me an AIO with your position. If need be, we can schedule a meeting later in the week.

4

Thank you for your input!

Glenn.

Distribution:

TO:	PAUL D. D'ENTREMONT	(D'ENTREMONT-PD-O5438 @A1@SASRS2)
TO:	Steven E. Crook	(CROOK-SE-O7646)

TO:	Kim S. Wierzbicki	(WIERZBICKI-KS-O6535 @A1@SASRS2)
TO:	William N. Kennedy	(KENNEDY-WN-Y5995 @A1@SRXSS2)
TO:	Mary E. Johnson	(JOHNSON-ME-W8738)
CC:	Gary E. Abell	(ABELL-GE-L1864)
CC:	Mona M. Tantawi	(TANTAWI-MM-Y6050)
CC:	Phil W. Schuetz	(SCHUETZ-PW-B8158)
CC:	Philip O. Rodwell	(RODWELL-PO-Y4512)
CC:	William E. Perry	(PERRY-WE-B8346)
CC:	Clifford E. Bell	(BELL-CE-Y4567)
CC:	Burgess M. Allen	(ALLEN-BM-O4697)
CC:	R.A. Stokes	(STOKES-RA-Y4466)
CC:	Mark P. Reimnitz	(REIMNITZ-MP-Y5989 @A1@SASRS2)
CC:	Timothy F. Matheis	(MATHEIS-TF-Y9730 @A1@SASRS2)
CC:	Matt E. Jamison	(JAMISON-ME-L2354 @A1@SASRS2)

FROM THE DESK OF MATT HUNTER

INTER-OFFICE MEMORANDUM

August 28, 1992

To: M. A. Ceravolo, 703-H
F. G. McNatt, 241-8H
T. B. Caldwell, 241-102F
M. J. Rea, 241-147H
C. B. Stevens, 703-H
C. R. Hayes, 703-18A
W. B. Van Pelt, 241-152H
P. D. d'Entremont, 703-H
J. A. Pike, 703-H
T. P. Gaughan, 241-152H
P. W. Norris, 241-147H
R. Nordstrom, 241-102F

From: M. A. Hunter, 703-H MAH

Comments on the draft Tank Assessment Responses

The enclosed package contains the responses to DHEC comments on the Tank Assessments that have been received thus far. We have committed to a date of September 4 to get these comments to upper management for review. In preparation for that date, I am issuing a draft package of responses for your comment. To date I have received 40 out of 80 responses from the responsible engineers. I am requesting your comments on their responses by September 2 to allow adequate time for incorporation. If your comments have not received by that date, it will be assumed that you have no comments for this review cycle.

CC: K. S. Wierzbicki, 703-H
B. L. Lewis, 703-H

SUGGEST FORMATTING RESPONSES AS TM GAUGHAN DID OR BETTER, RE. NORD STRAM DID

WESTINGHOUSE SAVANNAH RIVER COMPANY
INTER-OFFICE MEMORANDUM

August 20, 1992

DRAFT

To: M.A. Hunter, 703-H

From: P.W. Norris, 241-147H

RESPONSE TO PHASE I & II TANK ASSESSMENTS COMMENTS FROM SCDHEC

Rec. 1: Describe the operating practices and management procedures that are used to ensure that the internal cooling systems and annulus vent systems are in proper working condition at all times. For example, describe the controls, alarms, monitoring, inspection and maintenance procedures that are employed for the various scenarios during normal operations and potential problem scenarios. Also discuss the equipment and procedures used to detect malfunctions in the cooling system, as well as leaks in the tank systems where the cooling systems may be capable of detecting such problems.

Cooling Coils

Operators are provided with roundsheet procedures in which they record essential process parameters in the waste tank farms two times a day. For the tank internal cooling system (i.e, pumphouse and cooling coils), parameters such as cooling water pressures and temperatures are recorded. If any of the parameters are outside of set operating limits, the item is flagged for the review of process supervision or if instructed by the roundsheets, an action is taken in an attempt to correct the situation. The control rooms in the tank farms also have various alarms associated with the internal cooling coil system such as coolant pump failure and expansion tank hi/lo level (i.e, head pressure tank). If an alarm is received, it is acknowledged and the appropriate steps are taken to respond to the alarm. Preventive maintenance procedures also exist which prompt personnel to upkeep the system equipment and instruments as appropriate.

Annulus System

The annulus system is not a primary source for cooling of the waste tank. In fact, the annulus ventilation provides several purposes; 1) heated air provided into the annuli prevents condensation and thus prevents general corrosion on the steel wall, 2) the heated air stream, in the Type I and II tanks that have leaks, causes hard salt deposits to form around the leaksites, thus preventing seepage of waste from the leaksite, and 3) if necessary, the annulus air stream can provide supplemental cooling to the steel walls and bottom of the hotter tanks (e.g. fresh HHW receivers).

The roundsheet procedure also is used on the tanks to record various parameters from the tank ventilation systems. Tank-to-annulus vacuum as well as annulus outlet temperature is recorded daily. Alarms for the annulus ventilation, such as annulus blower failure, is also supplied in the control room. Alarms and items outside of operating limits are responded to the same as discussed in the cooling coils section. Preventive maintenance also exists which prompt personnel to upkeep the system equipment and instruments as appropriate.

Rec. 3: Discuss the history of any cooling system (cooling coils and annulus ventilation) failures, the consequences of a failure, and any actions that need to be taken if the annulus cooling system becomes inoperative due to a large leak (e.g.,liquid fills the annulus vent duct slots and/or the bottom air flow slots).

Cooling Coils

Over the years, ~~numerous~~ several waste tank cooling coils have failed. When this occurs, the individual cooling coil is taken out of service and is permanently blanked. At the present, the remaining cooling coils that are in service provide sufficient cooling for the current contents of the tanks and anticipated future operations. Therefore, the effect of these cooling coil failures, if any, has been minimal.

Annulus System

The annulus ventilation system, as mentioned in Rec. #1, is not a primary source for cooling of the waste tank. Therefore, failure of the annulus ventilation system would not be an immediate problem~~s~~. However, it should be noted that the fresh High Heat Waste receipt tanks (Tanks 32, 35 and 39), which have the highest heat load, have an installed spare annulus blower that could be put into service if the primary blower failed. Also, a spare annulus blower could be added to any other tank if the need arises.

If a large leak did occur and filled the annulus vent slots, then the annulus ventilation system would be turned off until the waste could be removed from the annulus. WHAT HAPPENS WITH WASTE AFTER REMOVAL?

Rec. ~~24~~. The report is rather sketchy about design and operational details, pumping rates, etc. for the catch tanks and their encasements. Provide sufficient details to demonstrate that these units perform as required and do not leak. Also discuss how the unlined concrete encasements, which receive all waste before the catch tanks do, prevent migration of the waste into or through the concrete and any cracks, gap or joints in the encasements. Further, discuss the final disposition of any wastes collected in the catch tanks.

The catch tank function is to collect drainage from a diversion box for Type I Tanks, and from the underground transfer line encasements serving

the Type I tanks in F-Area and Type I and II tanks in H-Area. However, in H-Area, the diversion box that did drain to the catch tank is now pumped to a pump tank. The catch tank is enclosed in a sealed concrete encasement which has a sump that would detect any leak from the catch tank. Both the catch tank and sump contain a 150 psig steam jet that is used to empty any contents that may be collected. If waste ever enters the catch tank during tank farm operations, the waste would be emptied to a Type III/IIIA waste tank. Groundwater inleakage, which enters through the joints in the transfer line encasement cover slabs, also collects in the catch tank and is jetted to the Effluent Treatment Facility in H-Area and to a waste tank in F-Area. pumped? both places?

The Type I transfer line encasements are secondary containment ~~and verification of secondary containment is not required by the FFA;~~ however, the following information should answer your concerns:

In order to verify that the encasement will provide adequate containment of leaked waste as it drains to the catch tank, a procedure is periodically performed in which a set amount of water is introduced into one end of the encasement and it is verified that this amount of water (+/- a set percent) is received into the catch tank at the other end. clean water? How often?

Rec. ~~25:~~ Describe what type of "normal surveillance" or operator suspicion, other than finding liquid via the leak detection equipment, would prompt an operator to conduct an air leak test. Also discuss which sections of this type of pipe are "amenable to the test," and which is not.

The Waste Management Operations (WMO) tickler program prompts the air testing of active testable lines which have not been tested in the past two years. In order to determine which line segments are "amenable" to the test, a database was formed which lists the active lines in F and H area tank farms and gives the pressure testing status of each. The WMO Leak Testing Coordinator is responsible for controlling this database and updating it each time a line is pressure tested. Does this mean that all active lines are amenable? How often (or how many tests) are conducted over a given period?

Rec. ~~26:~~ Provide details to demonstrate that all joints between secondary containment jackets, drain pipes, LDBs, diversion boxes, pump pits, overflow drains, waste tanks, drain cells, final catchment, etc. are continuous and liquid tight.

When a transfer line is air pressure tested, these joints are also subjected to the air pressure and are therefore verified continuous and liquid tight if the line passes the test. If the line does not pass, work is initiated to repair the leak before the line is allowed to be placed in service. However, in some special cases, a technical justification may be written to allow the line to be used until repairs can be made if there is assurance that the failure could not result in a release to the environment (e.g., a leak would have to enter into a pit or tank annulus). what is involved?

ARE MORE DETAILS?

Rec. 55: Provide details to show how the stainless steel liners for evaporators 242-F and 242-H are connected to the walls. The report does not indicate that this is done in such a way as to prevent leakage at this connection. Also provide this information for the hold tank cell liners for evaporators 242-16F and 242-16H.

The stainless steel liners for 242-F and 242-H were divided during installation into floor panels and wall panels. The floor panels were installed and welded to stainless steel strips that had been anchored into the concrete during construction. The wall panels were flanged at the bottom and welded to the floor panel. The liner was connected to the wall with the use of studs. The studs were then welded to the liner in order to have a seal around them. The corners of the wall liner were overlapped and welded. Per design, all seams and welds were vacuum tested to verify they were leaktight. The top edge of the liner (~18" above the cell floor) was sealed to the wall with a caulking compound.

The stainless steel liner for the 242-16F and 242-16H overheads hold tank cell were also divided during installation into floor panels and wall panels. Stainless steel strips were anchored into the concrete on the floor, wall, and corners for welding locations once the liner was put into place. After installation, all seams and welds were tested for leaktightness using the Dye Penetrant method.

Rec. 56: Discuss the size of the gravity drain line from evaporator 242-H to Tank 13, and evaluate the capability/speed of this line to drain a large, rapid release to that Tank (i.e., will it prevent overtopping of the 18 inch deep pan).

The 242-H evaporator cell contains a 2'x 2'x 3' sump with liquid level measurement devices that are monitored in the control room. If the sump level increases signifcantly/rapidly during evaporator operation, the evaporator is shutdown (preventing additional waste from entering the cell) and the sump is emptied by an air lift to Tank 13 via a gravity drain line (GDL). The sump also contains an overflow line which ties into this same GDL to allow drainage in the event the lift fails or cannot keep up with the rate of leakage. This GDL is 3" in diameter and the elevation difference between the evaporator and tank is ~16'.

FLOW RATE?

file: c:\word5\tanks\dhec

cc: B.L. Lewis, 703-H
P.D. d'Entremont, 703-H
R.E. Nordstrom, 241-102F
J.A. Pike, 703-H
M.A. Ceravolo, 703-H
M.J. Rea, 241-147H
T.P. Gaughan, 241-152H

SCDHEC TANK ASSESSMENT RESPONSES - TIM GAUGHAN

#1. Provide more detail on the monitoring of the nitrogen blanket which is maintained in tanks where the potential exists, specifically, how the blanket integrity is monitored and maintained.

a. Tanks 48 and 49
b. Filtrate Hold Tanks.

In a nitrogen purged waste tank (Tanks 48 and 49), the nitrogen is delivered through dual control systems. Nitrogen flow rate is controlled by supply valves that are controlled in turn from the output from an oxygen analyzer in the tank exhaust system. A benzene analyzer and a combustible gas analyzer which measures the fraction of the lower flammability limit (LFL) are installed on the off-gas exhaust systems of the waste tanks. Instrumentation exists for monitoring and maintaining the vacuum inside the waste tanks.

In the ITP Filtrate Hold Tanks a positive pressure is maintained in the tank vapor space by a tank-pressure transmitter that controls the valve on the nitrogen supply. A low-pressure signal from the tank opens the control valve, raising the tank nitrogen pressure to the pressure set point on the transmitter. If the nitrogen supply fails during a transfer from the tank, the conservation vent provides vacuum relief. High pressure in the tank, as can happen on hot days or during tank filling, is also relieved through a conservation vent. In abnormal cases, pressure could also be relieved through the seal pot or through an emergency pressure-relief vent. Once a nitrogen blanket is established in the Hold Tanks, monitoring is performed to ensure oxygen concentration is less than 9.0 %.

#2. Discuss whether or not and provide details on the potential for leaks to escape through the ventilation systems to the environment.

ARE THERE DETAILS?

a. ITP Cross-Flow Filters
b. Stripper Columns

It is extremely unlikely for liquid from the Stripper Columns to reach the environment as this material would need to progress through the Column Off-Gas system prior to release. The Columns also include high and high-high liquid level alarms which will indicate when liquids in the columns are approaching the full level. Procedures and interlocks are in place to reduce the volume in the columns when these alarms are indicated.

The Column Off-Gas system includes a High Efficiency Mist Eliminator (HEME), located directly downstream of the Columns, which is designed to filter out any liquid particulates in the Off-Gas stream. The HEME also includes a drain line where liquids captured by the unit will drain back to the Column. After the HEME, the Off-Gas is processed through a pre-heater which evaporates any additional fluid not captured by the HEME. (Prior to sending it through a large High Efficiency Particulate Air (HEPA) filter which removes radioactive particulates prior to the gas reaching the stack.) High Pressure indicators on the HEPA filters will also alarm should liquid reach them. Once in the stack the Off-gas is monitored for any remaining radioactivity by an on-line Isokinetic Radiation monitor.

SENTENCE DOESN'T READ RIGHT

It is highly unlikely that liquid leaks from the ITP Cross Flow Filters would be released through the Filter Cell ventilation system. Liquid releases from the filters are inclined to gravity drain towards a sump in the bottom of a stainless steel liner which surrounds the filter. Liquid detection devices in this sump alarm and interlocks associated with the filter stop further material from entering the filters. An eductor in this sump transfers liquid in this area back to Tank 48 where the material will be processed in the next batch of ITP Feed.

For material leaking from the filters to reach the ventilation system, the volume of liquid draining to the sump would need to overflow the sump and fill the filter cell to a level that reaches the ventilation duct which is located ~ 2 feet above the sump. Liquid detection devices in the sump and their associated alarms make this situation extremely unlikely. If material did reach the ventilation system, radiation monitors in the ventilation system will alarm denoting radioactive material in the ductwork. Process Off-Gas from the Filter Cell passes through a bank of HEPA filters, designed to capture radioactive particulates, and is then isokinetically sampled for radioactive isotopes prior to release through a dedicated process stack. High Pressure indicators on the HEPA filters will also alarm should liquid reach them.

#3. Discuss the types and frequencies of any tests that are used to ensure leak detection and removal systems are in proper working order at all times.

a. Tanks 48 and 49

Leak detection devices pertaining to Tanks 48 and 49 include annulus conductivity probes, high level liquid probes, liquid measuring devices and visual/photographic inspections. Failure alarms in the facility control room associated with these leak detection devices continually check the operability of this equipment.

Functionality tests which thoroughly test and calibrate this equipment to insure proper working efficiency is performed per operating procedure on a periodic basis. Tests include remotely sending signals to this equipment to insure proper alarms and interlocks which prevent further leaks perform properly. Functionality tests for the annulus conductivity probes are conducted every 6 months. Functionality tests for the high level liquid probes and liquid measuring devices are performed every 2 months. Visual/Photographic inspection of the primary tank's walls to detect evidence of leakage is conducted every 2 years.

Removal systems for the waste tanks include transfer pumps dedicated to each tank and the spare tank capacity of the Tank Farm. Spare tank capacity is verified per procedure every 3 months to insure volume is available if a leak was to occur and a tank's contents required removal to another tank. Functionality tests of the transfer pumps similar to those described above for the leak detection devices are performed monthly.

#4. Due to the location of the "high liquid level" probes in the sumps within the ITP Filtrate Hold Tank Room, and the long travel distance across two to three rooms to the sump, describe how small leaks will be detected and removed with 24 hours. If such leak detection and removal is not possible within 24 hours, describe the system modifications that will be implemented to meet this requirement or demonstrate that existing technologies do not allow detection and removal within 24 hours.

a. ITP Filtrate Hold Tanks/Stripper Columns
b. ITP Cross-Flow Filters

A walk-through surveillance of the ITP Filtrate Hold Tank Room, Stripper Column Room, Bottoms Pumps Room, Domestic Water Break Tank Room, and the Electrical Control Room will be conducted every shift (every 12 hours) by Operating Personnel. Part of this surveillance is the identification of any leaks (of any size) from process equipment in the above mentioned areas. Leaks found are first characterized as to their composition and volume. After donning the appropriate protective equipment the leaked material will be localized to prevent the spread of contamination. Absorbent material will be used to remove the liquid from the affected area. This absorbent material will be characterized and disposed of according to current SRS procedures for Radioactive and/or Hazardous Waste.

It should be noted that radiation and oxygen monitors are located in each area of the ITP Process Building. Leaks of radioactive material in the building will likely also be identified through the alarming of these monitors.

Through the above mentioned process, leaks will be identified in the ITP Filtrate Hold Tank and Stripping Column rooms within 24 hours. However, due to the liquid volume and amount of radioactivity involved with certain types of spills, safety and contamination concerns may make it impossible to completely remove/remediate these spills within 24 hours. The secondary containment systems of both the ITP Filtrate Hold Tank and Stripping Column rooms will prevent these leaks from reaching the environment, regardless of remediation duration.

Small leaks from the ITP Cross-Flow Filters will be completely contained within the confines of stainless steel filter cells which surround each filter. This cell is designed to provide gravity drain of any free liquids toward a dedicated cell sump which pumps the material to Tank 48 to be included in the next batch of ITP feed. Also in this sump is a liquid detection device which will alarm when enough liquid has reached the setpoint level of the sump. Filter Cells are also visually inspected once every ITP batch (~ 1/month).

In the extremely unlikely event that material leaks underneath the filter cell stainless steel liner, material will be contained in a underliner which encompasses each filter cell. This underliner drains to another sump which contains another liquid detection alarm. If material does reach this underliner sump it will be sampled and disposed of according to its composition.

#5. Describe how any leakage above the upper (i.e., second floor) stripper supports will be prevented from leaving the Stripper Room. Figure 3-13 shows a potential pathway from the Stripper Room to the Break Water Room at this level. Otherwise describe the secondary containment system within the Break Water Room.

The containment system for the Stripper Columns and Pump Room consist of a stainless steel liner which slopes towards the Hold Tank Area Sump. Accumulated liquids from any level in the Column and Pump Rooms will be completely contained by this liner and the Stripper Building walls. Any leaking material will be allowed to drain into the adjacent Hold Tank Room Sump where it can be pumped to Tank 48 to be included in the next ITP Feed batch.

Figure 3-13 properly indicates that the Break Water Tank Room is located next to the Stripper Column Room. The sketch fails to detail a concrete wall which separates the Column Room and the Break Tank Room. This wall prevents leakage from the second story Column Room from entering the Break Tank Room. Figure 3-13 correctly indicates the floor of both the Column and Break Tank Rooms slope towards the Hold Tank Area. This sloped floor prevents leakage material from the Stripper Columns from entering the Break Tank Room on the floor level.

WHERE'S THE DETAIL

COMMENTS ON PHASE I & II TANK ASSESSMENTS

Rec. 17 SECTION: LEAK DETECTION/INSPECTION

CATEGORY: SOIL MONITORING

PHASE	SUBSECTION	PARAGRAPH	SUBJECT
II	3.1.4	19	TYPE I WASTE TANKS
II	3.2.4	27	TYPE II WASTE TANKS
II	3.3.4	9	TYPE III/IIIA WASTE TANKS
II	3.4.4	39	TYPE IV WASTE TANKS
II	3.5.4	9	EVAPORATORS
II	3.6.4	9	PUMP PITS
II	3.7.1.4	9	TYPE I TRANSFER LINES
II	3.7.3.4	9	TYPE III/IIIA TRANSFER LINES
II	3.7.4.4	9	TYPE IV TRANSFER LINES
II	3.8.4	9	DIVERSION BOXES

COMMENT: Discuss the soil monitoring immediately surrounding these systems.

FFA IN WW/TA/NONE? N

SECTION: N/A

NONE

RESPONSIBLE PARTY: EBD

WHAT ARE THEY

KNOWING?

There is no direct soil monitoring currently being done around these systems. However, dry wells are used to measure rad levels in the soils. These wells are located around the evaporators, the pump pits, and the division boxes

DATE: 08/11/92

R. E. Nordstrom

Rec. 10 *Section:* Waste Compatibility

Category: ID of Leak Sites in Type IV Tanks

Phase	*Subsection*	*Paragraph*	*Subject*
II	4.4.2	68	Type IV Waste Tanks

Comment
Demonstrate that all leak sites will be identified for these tanks before using them to receive low level radioactive process wastewaters, and that the tanks will not be filled above their lowest leak sites. The demonstration should include a method of determining where the lowest leak sites may be given that 100% of the tank wall cannot be viewed by current techniques.

Response
Above the liquid surface, the tank wall is photographically inspected for cracks each year. The wall below the liquid surface is not photographically inspected; however, liquid removed from the tank bottom (and sidewall in H-Area) leak detection sumps is analyzed for radioactivity. A leak below the liquid surface would result in an activity increase in liquid removed from either the bottom (and/or sidewall in H-Area) leak detection sump.

The liquid level operating limit in Tank 20 is administratively controlled and maintained below the lowest crack.

Rec. 13 *Section:* Foundation Support

Category: Piping Specifics

Phase	*Subsection*	*Paragraph*	*Subject*
II	3.5.1	14	Evaporators
II	3.7.1.3	14	Type I Transfer Lines
II	3.7.2.3	14	Type II/IIA Transfer Lines
II	3.7.3.3	14	Type III/IIIA Transfer Lines
II	3.7.4.3	14	Type IV Transfer Lines
II	4.5.5	14	Evaporators

Comment
The report states that no specific design standards were used for these pipes, that most of them are buried below grade, and that a minimum soil cover thickness has not been established for pipes at the site. Discuss the precautions that have been taken to prevent damage to these waste pipes or their secondary containment devices due to vehicle traffic and any other surface loads. ? ?

Response
No single design standard was used for tank farm transfer lines. Different transfer piping designs have been used throughout the history of the tank farms (Types I, II/IIA, III/IIIA, and IV transfer lines).

The current standard minimum soil thickness above transfer lines is 2 1/2 feet; except beneath roads and railroad tracks where the minimum soil thickness is 3 1/2 feet.

WHERE PERMITTED ?

HAVE THERE BEEN ANY PRECAUTIONS ?

Rec. 16 *Section:* Leak Detection/Inspection

Category: Leak Detection Probe Testing

Phase	*Subsection*	*Paragraph*	*Subject*
I	3.1.4	10	Tanks 48 and 49
II	3.1.4	8	Type I Waste Tanks
II	3.2.4	8	Type II Waste Tanks
II	3.3.4	8	Type III/IIIA Waste Tanks
II	3.5.4	8	Evaporators
II	3.6.4	8	Pump Pits
II	3.7.1.4	8	Type I Transfer Lines
II	3.7.3.4	8	Type III/IIIA Transfer Lines
II	3.7.4.4	8	Type IV Transfer Lines
II	3.8.4	8	Diversion Boxes

Comment
Discuss the types and frequencies of any tests that are used to ensure that the leak detection and removal systems are in proper working order at all times.

Response
Transfer line secondary containment is pressure tested every two years. WMO verifies the leak detection conductivity probe loops twice per day. WMM verifies the leak detection conductivity probe loops ***once per month.***

Removal systems (e.g., jets and pumps) cannot be functionally tested without liquid present in the leak detection system (e.g., sumps, leak detection boxes, annuli, etc.). ~~Furthmore, secondary containment integrity verification is not required by the Federal Facilities Agreement (FFA)~~.

NEED TO COORDINATE THIS RESPONSE WITH THAT OF TIM GAUCHOUS #3!

Rec. 20 *Section:* Leak Detection/Inspection

Category: Fill Limit Probe Heights

Phase	*Subsection*	*Paragraph*	*Subject*
II	3.1.4	18	Type I Waste Tanks

Comment
Clarify if the fill limit probes are always located 10 inches below the lower of the two possible fill levels (i.e., below the design fill limit or the lowest leak site, whichever is lower).

Response
The fill limit probes for the Type I and II Waste Tanks are located at least ten inches below the Technical Standard fill limit. The fill limit probe in Tank 13 is maintained ten inches below the lowest known crack.

Rec. 21 *Section:* Leak Detection/Inspection

Category: Leak Collection System

Phase	*Subsection*	*Paragraph*	*Subject*
II	3.4.4	34	Type IV Waste Tanks

Comment
Provide additional design details about the bottom leak collection system and detection sump to show that it functions as planned, and is not a release pathway for leakage (i.e., does not have cracks or gaps that would allow migration). Also, discuss how often it is monitored, and what tests are performed to detect leakage.

Response
Functional testing of the Type IV Waste Tank bottom collection system is not possible. But, to verify waste has not leaked from the waste tank and from the bottom leak collection system, the groundwater is monitored in both areas around the Type IV Waste Tanks. If a tank leak occurred and the waste was not contained by the bottom leak collection system, groundwater activity would be detected.

Are there details?

Rec. 22 *Section:* Leak Detection/Inspection

Category: Leak Collection System

Phase	*Subsection*	*Paragraph*	*Subject*
II	3.4.4	35	Type IV Waste Tanks

Comment
Provide details to show how "Two vertical pipes, 180° apart, connect the sidewall leak detection channel to the bottom leak detection channel." Figure 3.5 shows the vertical pipes outside the area of the bottom channels.

Response
The H-Area Type IV sidewall sumps have a curb surrounding the tank on the outside of the two vertical pipes. Figure 3-5 will be revised to show the curb.

Rec. 23 *Section:* Leak Detection/Inspection

Category: Sidewall Leak Detection Monitoring

Phase	*Subsection*	*Paragraph*	*Subject*
II	3.4.4	36-38	Type IV Waste Tanks

Comment
Discuss how often the sidewall leak detection system is monitored, and what tests are performed to detect leakage. (Also, provide information about the levels to which "perched" groundwater is allowed to rise before it is removed, and how long this water is allowed to accumulate before it is removed.)

Discuss how sidewall leaks are monitored for F-Area tanks.

Provide details about the waste level monitoring systems in these tanks, including type, frequency of readings and sensitivities to changes in the waste levels.

Response
The sidewall leak detection system is monitored weekly. It is pumped when the sidewall sump level reaches 40" or 12" below the liquid level in the tank, whichever occurs first. The liquid pumped out is analyzed for radioactivity.

Leaks from the side of the tank in F-Area would reach the bottom leak detection sump and be detected by the bottom leak detection sump instrumentation.

The waste level monitoring systems in the Type IV Waste Tanks are basically the same as those used for Type I Waste Tanks (described in Section 3.1.4, Instrumentation).

Where is RESPONSE?

Rec. 32 *Section:* Past Leaks

Category: Leak Detection in Pump Pits

Phase	*Subsection*	*Paragraph*	*Subject*
II	3.6.5	49	Pump Pits

Comment
Describe the methods used to "discover" any leaks through the stainless steel liners.

Response
Neither secondary containment integrity verification nor leak detection capabilities beyond the secondary containment is required by the Federal Facilities Agreement (FFA).

REMEMBER, DHEC IS NOT RECOGNIZING FFA WHEN NEGOTIATING THIS PERMIT PACKAGE!

Rec. 50 *Section:* Design Information

Category: Liquid in Annulus

Phase	*Subsection*	*Paragraph*	*Subject*
II	3.3.1	28	Type III/IIIA Waste Tanks

Comment
Discuss the source of the small amounts of liquid that is removed by the annulus ventilation system.

Response
Small amounts of liquid present in the annulus result from rainwater inleakage through the annulus risers.

~~ARE~~ HOW IS IT VERIFIED THAT THIS IS ONLY RAINWATER?

Comment Key is Attached

Rec 9

The cement/asbestos pipe was evaluated for use in this application before being installed in the systems. Cement/asbestos is known to be resistant to alkaline materials. For example, the NACE Corrosion Data Survey, Non-metals Section approves the use of concrete (cement plus sand, gravel and water forms concrete) in contact with 10-90% NaOH solutions at temperatures from 70 to 90°F. The asbestos is added to the pipe for mechanical properties improvement. Asbestos is also resistant to caustic attack. The same reference permits the use of asbestos in contact with nitrate solutions under similar conditions of concentration and temperature. SPEC

Note that cement is attacked by acid solutions especially in the presence of sulfate ions. The increase in alkalinity caused by the NaOH addition would, therefore, be protective under these conditions as is indicated. The statement in the Assessment ~~does~~ WAS NOT ~~not~~ imply that any leakage has occurred in these piping systems. INTENDED TO

Rec 14

On page 23 of the Assessment the visual and photographic inspection is described in some detail. In addition, Attachment B carries further discussion of photographic inspections. An Annual Tank Inspection Report that includes a summary of inspections made - visual, photographic, and ultrasonic - will be issued soon. A copy will be sent to SCDHEC for information when it is available. ANNUAL REPORT

Rec 33

As stated on page 101 of the Phase II Assessment report, all the lines whose secondary containment jackets ended outside pump pits and diversion boxes have been replaced or abandoned. Secondary containment is now achieved by taking the secondary containment component through the wall of the pump pit or diversion box. Once inside the box or pit, the secondary enclosure is provided by the walls and floor of the receiving structure. ARE THERE DETAILS

Rec 35 TBP ?

Rec 36

All diversion boxes are inspected each time they are opened for operational purposes or maintenance. In some cases that is several times a month; in other cases it may be as long as a year. There is no requirement that inspections be made on some specified frequency, however, the inspections are frequent where there is the potential for significant leakage from jumper changes or

maintenance operations. Video inspection techniques similar to those discussed under tank inspectios are used. The separation of the metal from the concrete would be detected in these inspections. No other indications of separation of the liner from the concrete have been noted. When the boxes are installed, the welds are inspected and tested for leak tightness. Unless damaged, as in the case of FDB2, they would not be expected to leak.

Rec 37

DETAILS?

In all installations where there are penetrations of the stainless steel liner the liner is welded to that penetrating item (e.g., tank leg pedestals, pipe penetrations, etc.) and the weld is tested for leak tightness. This also applies to the evaporator lined hold tank cell liners.

Rec 38

The gutter and the sump for the ITP Filtrate Hold Tank are lined with stainless steel. The concrete containment also contains water stops that would prevent leakage through the concrete seams if the liquid somehow penetrated the liner. The concrete is thick enough that it would be impossible for leakage to penetrate it unless there were through wall cracks present. The concrete is inspected for cracks before the liner is put in. The secondary containment is the liner, not the concrete.

Rec 39

The concrete shell and the concrete are fabricated to make the gap between the liner and wall as small as possible. Figure 3-8 is not to scale and the gap shown is exaggerated. The gap in no way effects the secondary containment as explained in Rec 40 below.

Rec 40

WHERE?

NEED REVISED FIGURE

Rec 41

The liner dimensions are approximately 33'x38' (walls are about 1' thick). The original liner was 6" high around the room. Note that the sloping floor actually provides more volume since it slopes 4.5" over the building and extends below the nominal floor location. If it is assumed that the average additional space is 2.25", this increases the volume to about 6500 gallons. There is some loss due to the pump pads and other equipment supports but this is less than 10%. In addition the sump provides an additional volume of about 360 gallons. Thus, the original containment contains a minimum of 6000 gallons. This, of course is less than the required 12,120 gallons (largest tank plus 10%). The additional coating up to 16" above the nominal floor would increase

the containment volume to about 12,900 gallons, thereby meeting the desired containment volume. **(Visit building to verify)**

Rec 42

Non - coated refers to the concrete in the stripper building and hold tank areas that have not been coated with the epoxy coating.

Rec 43 TBP

Rec 44

The minimum height to which the coating will be applied will be 16". Normally when coating is applied there are variations in the height of application but the 16" minimum will be observed. There may be areas where the application is 18" high but that is not the requirement. As discussed above, the 16" height will be more than adequate.

Rec 45

The drains through the wall are provided with stainless steel liners that are welded to the liners in the stripper area rooms.

Rec 47

The trenches are known to be leak-tight on three sides when installed and do not contain coatings. The only gasket material is between the sides of the trench and the top cover and between sections of the top cover. This gasket material is never in contact with waste. With age, it does deteriorate. Hence, occasional inleakage of ground water is observed.

The trench encasements are water proof on three sides. The groundwater inleakage takes place only at the cap seams. The trenches are sloped in such a way as to drain to catch tanks which are amptied as needed and the water monitored for radioactivity before discharge. The inleakage usually is small and of little concern. This inleakage in no way impairs secondary containment. All trenches are large enough to take the flow of the largest of the lines contained in the trench without reaching the joint between the sides and top slab.

Rec 48

The leak pans under the Type I tanks are continuous. The appearance of discontinuity is an artifact of the figure.

Rec 49

More detail on the tank construction and materials used may be found in the permit application itself (As-Built Construction Permit Application For An Industrial Wastewater Treatment Facility For The F And H-Area High-Level Radioactive Waste Tank Farms). There are minor differences from tank to tank. More detail may be found on pages 303 through 311 of the permit application.

Rec 52

These tanks were constructed on a large concrete pad and then backfilled and compacted with a clay fill. This potentially allows an accumulation of perched water on top of the pad that could attain a significant hydrostatic head. Since it has been observed that water can leak into the collection sump in the tank system and, presumably, from there into any crevice existing between the liner and the concrete walls of the tank, it has been hypothesized that the hydrostatic pressure could build up to the point where it would tend to collapse the liner if the tank were to be empty. The liquid in the tank will keep the liner from being damaged.

Rec 53

See Rec 52 above.

Rec 57

The berms discussed in connection with the evaporators are not part of the containment system. They are outside of the building and are used to contain and direct the flow of rainwater that might have been contaminated with trace amounts of radioactivity to sumps where it can be sent to treatment before release. They are part of a contamination control program. These berms are formed from cement and may be up to 6" high. They may be moved or replaced as needed for operational purposes.

Rec 58

WHERE IS DETAIL?

The line from the condenser cell sump to the evaporator cell is Schedule 40, 304 stainless steel. The condenser cell would have primarily leakage from the condenser water side. The shell side will operate under a slight pressure and there is very little chance that radioactivity would escape. Condensate that has been collected from the condenser only a few hundred dpm/ml of radioactivity present. This line from the condenser cell to the evaporator cell runs down to the sump at the bottom of the evaporator cell. The sketch (Figure 3-7) does not show this because the line turns and goes out of the plane of view. Because the line runs all the way to the sump, there is no danger of the condensate getting behind the liner.

REC 63

The use of the rubber seal rings is restricted to lines that carry liquids that have relatively low radiation levels because the deterioration of the rings was known early in the plant life. Any leaks would likely be detected by the intrusion of ground water and would be repaired or the line taken out of service.

Rec 64

It is, of course, impossible to demonstrate that the unlined diversion boxes will never leak under any condition at any time as the statement implies. However, there has been no indication of leakage from these boxes over the 30-40 years that they have been in service as evidenced by the samples taken from monitoring wells that are located nearby. Certainly it is unlikely that waste would migrate through the very thick (1'-6" minimum) concrete walls of the boxes. Waste is not allowed to accumulate in the boxes. If small spills occur during realignment of jumpers or during maintenance operations, they are immediately cleaned up. Thus, there is no continueing presence of liquid waste in the box that might leak out.

Although the unlined diversion boxes are coated with a water proofing compound, credit for this has not been taken because the coating cannot be repaired if it deteriorates in use. This is because the radiation levels in the box would cause extensive man Rem exposure. Recoating would require complete removal of the old coating, cleaning of the surfaces and installation of a new coating.

Rec 65

There are two types of diversion boxes - those that have stainless steel liners and those that don't. In the case of the lined boxes, the entering lines have metallic secondary containment and their secondary containment lines are welded to the box liners. In the case of the unlined boxes, if the entering lines have a steel secondary containment, the secondary containment is seal welded to a steel plate set into the exterior of the box. In all cases, there is a method of leak detection in the diversion box. Thus, the requirement for secondary containment is met.

Rec 66

TBP ?

Rec 67

Many of the available drawings do show water stops but others do not. The requirements for a QA paper trail did not exist when these boxes were built and there is no absolute certainty that the water stops were installed in every case. Nevertheless, there is

no indication that any of these boxes have ever leaked to the environment. Adjacent monitoring wells show no indication of contamination. The box is a secondary containment. If leakage from the primary pipe occurs in the box, it is readily detected by the monitoring systems present and a significant hydrostatic pressure never develops before the leaking waste is removed.

Rec 70

The manhole in the line from the 242-H evaporator to the ETF is not covered by this permit. It was previously permitted in the F/H ETF process sewer line construction permit (SCDHEC Permit #13105).

MEETING TO DISCUSS SCDHEC COMMENTS ON PHASE I AND PHASE II ASSESSMENT REPORTS FOR F/H HIGH LEVEL RADIOACTIVE WASTE TANK FARMS

8/13/92

MEETING MINUTES

Meeting attendee list is attached.

INTRODUCTION

Danny Dunaway kicked off the meeting by stating the meeting purpose and asked for introductions.

Ann Gough stated that WSRC was a little surprised at the language or tone of the letter and had some concern over it.

TANK FARM OVERVIEW

Mark Mahoney gave an overview presentation on the tank farm process. His talk focused on the need for tank space and the need to run the evaporators. Mark pointed out that it will be necessary to remove waste from some Type III tanks first in order to "make space" available for further waste removal.

COMMENT RESOLUTION STRATEGY

Paul d'Entremont gave a presentation on the proposed strategy for technically responding to the Tank Assessment comments themselves. Paul stated that for the majority of the comments we will simply respond by clarifying / providing additional information. Some of the issues, however should be discussed here. At this point Paul recommended that if SCDHEC had a problem with our proposed strategy to let us know here. These issues are as follows:

- Containment system support - Response will be to list applicable industry codes for each type of tank.

- Detecting leaks within 24 hours - SRS can demonstrate that leaks that pose an environmental threat will be detected immediately. Small leaks (nodules) will take longer to detect. Will submit additional information.

- Removing waste from secondary containment within 24 hours - Installed jets will remove liquid immediately. Dried salt will be removed only after waste has been moved from the primary, because the salt seems to plug leaksites.

- Leakage during waste removal - Experience during waste removal from Tank 16 indicates that leakage rates will not pose an environmental threat. Further, no liquid waste was observed in secondary containment.

- Leak detection in secondary containment - We do have leak detection for secondary containment with the Type III tanks and newer diversion boxes and pump pits. In other structures the secondary containment is verified by construction testing (hydro testing and x-raying), visual inspections and groundwater monitoring.

- Conclusion that a tank has no leaks - Inspection and monitoring techniques are sufficient to detect leaks that are an environmental threat. Will also submit annual tank inspection report , as required by the FFA.

- Use of Tanks 2-8 for emergency space - Response will be to provide a schedule for providing a waste removal schedule. An emergency may be an unplanned emptying of a waste tank or an accident from another SRS facility that would result in a large volume of contaminated water.

Brenda Lewis gave the proposed strategy for administratively responding to the Tank Assessment comments. Brenda stated that for any drawings submitted in the response, a PE certification will be provided. However, it will not be the same PE who certified the Tank Assessments. Brenda also gave the "best guess" schedule (attached) for responding to these comments and receiving the wastewater permit. The schedule is based on the need to start ITP in 12/92.

SUMMARY / PATH FORWARD

Danny Dunaway wrapped-up by asking if there were any questions from any parties. There were none and the meeting was adjourned.

CONCLUSION

SCDHEC seemed satisfied with our strategy and felt that we were giving about what they expected.

8/13/92

MEETING TO DISCUSS TANK ASSESSMENT REPORTS COMMENT RESOLUTION STRATEGY

NAME	ORGANIZATION	PHONE #
Chuck Hayes	WSRC-EPD	725-8838
Myra Reece	DHEC - Aiken	641-7670
Ann Gough	WSRC-GCO	644-6113
KIM WIERZBICKI	WSRC - Waste Mgmt. Regulatory Comp.	557-8764
Gary S. Hoover	DOE/SR-ECD	725-3968
CYNTHIA BLAIR-McMANUS	DOE/SR - LWD	557-8248
G.T. WRIGHT	WSRC - HLW	557-1527
Paul D. d'Entremont	WSRC - ~~HLW~~ WME	557-8727
Brenda L. Lewis	WSRC - WME	557-8720
MATT HUNTER	WSRC - WMRC	557-1447
CARL RICHARDSON	SCDHEC - INDUSTRIAL WW DIV.	734-5246
Larry E. Arrington	DHEC - Ind. WW	734-5251
W. Danny Dunaway	WSRC - EPD	725-5754
Mark Mahoney	WSRC - HLW	557-1410

Containment System Support

- All tanks designed to ASME codes, which specify wall thicknesses and other structural requirements necessary to provide adequate support

- SRS response will list the codes applicable to each type of tank

Detecting Leaks in 24 Hours

- SRS can demonstrate that leaks that pose an environmental threat (i.e. significant amounts of liquid) will be detected immediately. Small leaks (nodules) will take longer to detect

- Limitations of the inspection methods were documented in the assessments, as required by FFA

Removing Waste from Secondary Containment in 24 Hours

- Liquids: Tanks have installed jets to immediately remove leaked liquid from secondary containment

- Dried Salt: Equipment to remove dried salt is not currently installed and will be installed as part of the waste removal program.
  - Tanks are designed and operated to maintain the waste in a dry, immobile condition until removal.
  - Sufficient liquid has been removed to prevent further leakage
  - Plans are to remove the salt only after waste has been removed from the primary, since dried salt seems to plug leaksites

Waste Leakage During Waste Removal

- Experience during waste removal from tank 16, the tank with the worst leakage history, indicate that leakage rates will not pose an environmental threat

- During waste removal, tank 16 underwent a number of slurrying operations, spray washing with hot water, and hot oxalic acid cleaning. Only limited changes in the leaksites were observed; no liquid waste was observed in secondary containment.

Leak Detection in Secondary Containment

- The FFA requires secondary containment for primary containment but not for secondary containment

- SRS does have some tank systems with leak detection for secondary containment, specifically the type IIIA tanks and the newer diversion boxes and pump pits.

- In other structures, the integrity of the secondary containment is verified by:
  - Testing during construction (hydrotests and X-ray)
  - Visual inspection
  - Groundwater monitoring

How Can SRS Say That a Tank Has No Leaks?

- The assessments show the tanks in which leaks have been detected and document the limitations of the inspection techniques, as required by the FFA.

- SRS believes that the inspection and monitoring techniques are sufficient to detect any leaks that are an environmental threat

- SRS will provide the annual tank inspection report to SCDHEC as part of our response to SCDHEC comments

Use of Tanks 2-8 for Emergency Space

- Schedule for waste removal -- In our response, SRS will provide a schedule for providing this information

- Potential scenarios that would consititute an emergency:
  - A leak or other unplanned event that would require emptying a high-level waste tank
  - An accident from some other facility at SRS, such as the canyons, that would create a large quantity of contaminated liquid waste

PE CERTIFICATON

- Will Be Provided for Any Drawings Included in Response

- Unable to Provide Same PE Stamp as for Tank Assessments

SCHEDULE

- Based on Current DOE Review Date for ITP

- Outstanding Issues May Change Schedule

- Will Provide WW Permit schedule need in WSRC Transmittal Letter

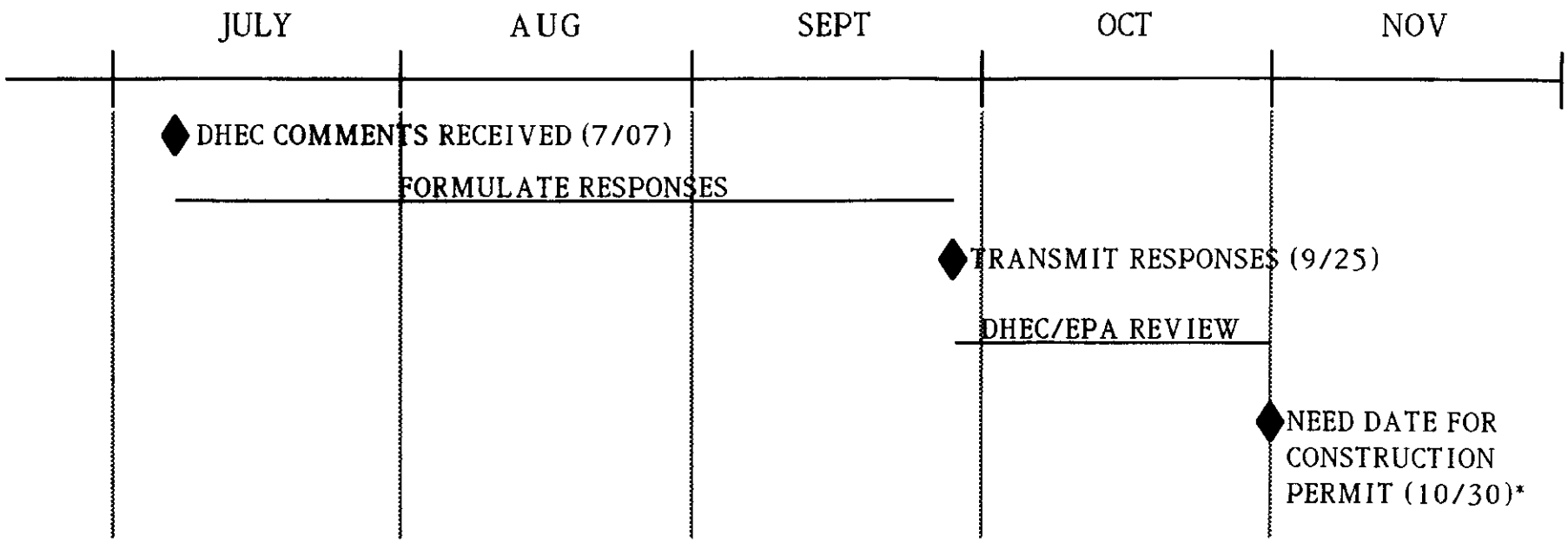

*NOTE: REQUESTED "NEED DATE FOR CONSTRUCTION PERMIT" IS BASED ON THE DEPARTMENT OF ENERGY OPERATIONAL READINESS REVIEW. THIS DATE MAY CHANGE AS REMAINING OPEN ISSUES ARE RESOVLED. A MORE ACCURATE DATE WILL BE TRANSMITTED WITH THE RESPONSES.

W-0517

To: Gary Exner, 241-120H

From: S. J. Carroll, 742-A

Date: August 11, 1992

Subject: Regulatory Impacts of Exceeding the 90 Day Storage Limit

Per your request, this note is written to explain the potential impacts of exceeding the 90 storage limit at the In-Tank Precipitation staging area if grouting in the ITP filter box doesn't go as planned. The regulations allow for a 30 day extension to the 90 day storage limit. These extensions are routinely granted, but must be requested through SCDHEC. The regulations require that a permit or interim status be obtained for storage longer than 120 days if the facility is to remain compliant. However, if the problem is of a "one-time" nature, and we think it can be resolved in 120 days, then the site may elect to discuss the problem up-front with SCDHEC and work toward resolution of the problem in a manner which wouldn't require us to pursue interim status for a storage facility.

To obtain interim status, DOE would need to modify the current RCRA Part A permit, and request that SCDEHEC approve additional storage at the ITP location. This process has been done within 120 days once before (for a concrete pad storage facility), but would have to be performed (starting from day 1) in a "crisis mode" in order to be accomplished in that timeframe. If it was accomplished, In-Tank Precipitation storage area would be an interim status facility which would need to comply with the appropriate RCRA regulations including either submitting a Part B permit for continued storage when the SCDHEC request it, or closing the storage facility at the time SCDHEC requests the permit application. Probably the biggest factor in the facility becoming a permitted RCRA storage facility is the tremendous cost of the permit application in terms of both time and money. These generally take a couple of years to write and a couple of years for SCDHEC to review and approve (after a public hearing). Another very large concern would be having to close the facility under the strict requirements of RCRA. This closure could easily cost a couple million dollars and be a real headache due to the remote aspects of the facility. Another potential problem is whether the need for such an additional storage facility could be adequately justified to the SCDHEC. In other words, SCDHEC needs to approve these expansions of the site's storage capability and they have been less willing to do so lately since the site always seems to want to store waste rather than treat it (that's SCDHECs perception anyway). Finally, if we don't make the deadline, we could be subject to fines of $10,000 per day of violation. Imprisonment would only be a possibility if there were criminal violations (willing and knowing violations of the regulations).

If we had some real problem with the grouting operation but thought it would be a one-time problem, the DOE and WSRC may elect to notify SCDHEC of the situation and suggest working together to reach a solution. If we are not able to complete the grouting in 120 days, then his could involve a settlement agreement with potential penalties (up to $10,000 per day), and a schedule for completion of the activity. With this type of approach, we would obviously not want to have the same problem to reoccur at a later date.

In discussing this issue with the RCRA permitting person in the EPD, it was suggested that if you go with the grout system, you may wish to have a leaded or concrete box as a back-up in case of failure of the system. Thirty days (as an example) of violation at $10,000 per day would go a long way toward the design cost of a stand-by box. It would also probably cost the site more than this if we went the permitting route due to the expensive nature of the permit and closure.

Another thing you may wish to look into is some of the difficulties that the site has experienced in grouting other wastes such as the naval fuels material. I understand that things did not go as smoothly as planned for a variety of reasons. This type of investigation may at least provide you with some things to avoid in a grouting situation.

One person on the site that may be able to help you with grouting concerns is Chris Langton, who works in Interim Waste Technology in SRTC.

In discussing this issue with various members of the EPD, it has come to my attention that the current wastewater treatment permit application does not mention the treatment/disposal of a failed ITP filter. According to Chuck Hayes, the permit application must be modified to include the fate of a failed filter, regardless of the use of grout or the use of a pre-engineered shielded box. It is also possible that if the grouting in the box is covered by the wastewater permit, then the 90 day storage violation and other RCRA violations would not apply to the situation.

Hope this answered your questions. Give me a call if I can be of additional help.

cc:
J. V. Odum, 742-A
M. Hawkins, 742-A
C. Hayes, 703-18A
C. Langton, 773-43A
W. Maloney,742-A

WSRC STRATEGY FOR ADDRESSSING QUESTIONS

- **Enhance information provided but acknowledge the FFA negotiated due to inability to meet RCRA secondary standards**

  Ex. Demonstrate that all leak detection systems for all tanks and ancillary equipment are capable of detecting any size leak within 24 hours and that the removal systems can also properly remove any leaks within 24 hours.

  Ex. Continued use of Tank 13 as evaporator feed tank a concern.

- **Supplement/clarify information provided in Tank Assessments & WW Permit Application**

  Ex. Provide specific ranges or limits for tank chemistry required to prevent stress corrosion cracking and the procedures/equipment to maintain these limits.

  Ex. Describe what type of normal surveillance would prompt an operator to conduct an air leak test and which sections of this pipe are amenable to the test.

- **PE Certification**

  Will be provided for any drawings included in response

- **No additional information provided because outside scope of FFA**

  Ex.

W-0517

WSRC-EPD

PERMITTING FIELD SUPPORT GROUP

REVIEW COMMENTS

DISTRIBUTION:
C. R. Hayes, 703-18A
W. D. Dunaway, 703-18A
J. V. Odum, 742-A
C. B. Stevens, 703-H
K. S. Wierzbicki, 703-H

(REV. 1, 3/23/92)

C R Hayes

REVIEWED BY	FIELD CONTACT	DATE	PAGE 1 OF 1
C. R. Hayes, 703-18A, X5-8838	M. A. Hunter	7/31/92	

FIELD CONTACT DEPT	PROJECT NAME	PROJECT NO.	FILE NO.
WMRC	F/H HLWTF Env. Permit Book (NMP-WMT-910882	N/A	N/A

SUBJECT REVIEWED

- [ ] PERMIT APPLICATION PACKAGE
- [ ] CALCULATIONS
- [ ] FDC
- [ ] PROPOSAL/ REQUEST
- [ ] DRAWINGS

REVIEW COMMENTS

General

Since the Power (Site Utilities) Department has custodianship of domestic water and sanitary wastewater treatment, collection and distribution systems, it is recommended that these documents be removed from this notebook. If this is not an alternative, then just include those permits for systems that directly serve WM facilities (i.e. Replacement High Level Waste Evaporator, New Transfer Facility, etc.). Further, there are other permits / variances that are missing (i.e. domestic water serving Tanks 241-20, 21H).

Also, in the past, there have been several EPD "permit variances" issued stating no permits were required for a particular activity. It may be beneficial to include this type of correspondence in this notebook.

Section 5 - Wastewater

It is recommended that this section be renamed INDUSTRIAL WASTEWATER. It is also recommended that permit applications be removed from the notebook. If all applications were included, the notebook couldn't hold them.

Attachment 5D, July 17, 1991 Letter is not needed.
Attachment 5D, Page 2 and 3 of 3/18/92 Letter are not needed.

O-I-C Letter at very end of section is not needed.

OSR 3-4A-W (Rev 1-89)

WESTINGHOUSE SAVANNAH RIVER COMPANY

INTER-OFFICE MEMORANDUM

June 16, 1992 WER-WME-920870

TO: J. W. Cook, 742-A
M. D. Dukes, 742-A
D. E. Gordon, 742-A
~~J. V. Odum, 742-A~~

Dunaway
Chuck
Hayes
703-18-A

FROM: M. A. Hunter, 703-H
T. P. Gaughan, 241-120H

ENVIRONMENTAL PERMIT NOTEBOOK FOR F/H WASTE TANK FARMS

Attached is a copy of the Environmental Permit Notebook for F/H Waste Tank Farms. The contents of the notebook were compiled by Tim Gaughan and Matt Hunter.

Please review this document for completeness of applicable regulatory documentation. Questions or comments should be directed to Tim (x7-8088) or Matt (x7-1447). Please submit a formal concurrence by Friday, July 31, 1992.

cc: J. S. Roberts, 742-A*
W. D. Dunaway, 742-A*
H. S. Etheridge, 742-A*
K. S. Wierzbicki, 703-H*
B. L. Lewis, 703-H*
C. B. Stevens, 703-H*
B. J. Clark, 703-H*

*without attachment

WDD,
THE FOLLOWING PROGRAM AREAS ARE INCLUDED IN THIS NOTEBOOK:
- NEPA
- FFA
- FFCA
- RCRA
- WASTEWATER
- NESHAP
- AIR
- NPDES
- DOMESTIC WATER
- SAN WASTEWATER
- CERCLA/SARA
- OSHA
- UST
- GROUNDWATER

PATH FORWARD ??
NOTICE 7/31 DATE.
CRH
7/27

CRH, W-0517

I went to this meeting but really didn't figure out why they are concerned about being "outside" — Pls. handle

7/28

INTER-OFFICE MEMORANDUM
Savannah River Site

Date: 27-Jul-1992 09:53am EDT
From: Matthew A. Hunter
HUNTER-MA-L2335 AT A1 AT SASRS2
Dept: WMT
Tel No: x7-1447/bp# 6761

TO: See Below

Subject: TANK 22 ACCEPTANCE OF LATEWASH RECYCLE

On Friday 7/24 a meeting was held to discuss the future use of Tank 22 for receipt of ITP and Latewash recycle streams. These streams have the potential to be above the Land Disposal Restriction limits for both benzene and pH. It is understood that the pH can be adjusted to be below 12.5 and within the tech standards for waste acceptance. The benzene, though not an LDR issue presently, will become one with the passage of the benzene rule expected around April '93. The benzene concentration will be in the 5 ppm range but well above the .5 ppm hazardous limit.

Waste Management is trying to delineate a position on the acceptance of the latewash waste stream. The ITP recycle is characterized in the wastewater permit though a benzene limit is not specified and the latewash stream is not mentioned per se. A position has been taken by WSRC that ITP recycle is not a new waste but is a residual of the waste already present. This allows us to avoid placing "new" waste into Type IV tanks and thus a violation of the FFCA. Since the LateWash Facility is not mentioned in the wastewater application and will be constructed outside of the tank farm boundaries as defined there it, it is not clear as to whether the latewash recycle will considered a "new" waste.

Waste Management would like EPD to address two specific questions along with their consequences. These questions are:

1) Will the latewash facility be considered outside the tank farm boundaries? (Dunaway/Hayes)
2) Will this recycle stream be considered "new" waste and is there a problem with its acceptance? (Lawrence/Hawkins)

A written response would be appreciated by 8/3 so that WM can promptly take any required actions.

Distribution:

TO:	BRUCE LAWRENCE	(LAWRENCE-BM-O4037 @A1@SLSRP1)
TO:	MONTE HAWKINS	(HAWKINS-M-O6779 @A1@SLSRP1)
TO:	Gerry F. Stejskal	(STEJSKAL-GF-Y6594 @A1@SLSRP1)
TO:	Mary E. Johnson	(JOHNSON-ME-W8738 @A1@SLSRP1)
TO:	W. DANNY DUNAWAY	(DUNAWAY-WD-O7436 @A1@SLSRP1)
CC:	TED D. ANDERSON 704-6N	(PAPER MAIL @A1@SASRS2)
CC:	J. MALVYN "MAL" MCKIBBEN	(MCKIBBEN-JM-O2295 AT A1 AT SASRS2)
CC:	Bharat R. Damani	(DAMANI-BR-Y4387 AT A1 AT SASRS2)
CC:	Srinivas Kodali	(KODALI-S-Y6742 @A1@SRXSS2)
CC:	Marcia B. Birk	(BIRK-MB-Y9793 AT A1 AT SASRS2)
CC:	TIMOTHY P. GAUGHAN	(GAUGHAN-TP-O8815 AT A1 AT SASRS2)

INTER-OFFICE MEMORANDUM
Savannah River Site

Date: 21-Jul-1992 03:07pm EDT
From: Matthew A. Hunter
HUNTER-MA-L2335 AT A1 AT SASRS2
Dept: WMT
Tel No: x7-1447/bp# 6761

TO: See Below

Subject: FUTURE USE OF TK22

A meeting has been set up for Friday 7/24 @ 11:30. The meeting has been set up to discuss the characteristics of the future waste stream into Tank 22. With the advent of Late Washing Facility, a higher concentration of benzene (<5ppm) may be fed into Tank 22. An assessment of this situation and an WM/EPD position needs to be delineated. If you will be unable to attend this meeting please send an alternate or contact me so that it can be rescheduled.

Distribution:

TO:	Marcia B. Birk	(BIRK-MB-Y9793 AT A1 AT SASRS2)
TO:	Brenda L. Lewis	(LEWIS-BL-O6503 AT A1 AT SASRS2)
TO:	Barbara J. Clark	(CLARK-BJ-L2439 AT A1 AT SASRS2)
TO:	Gerry F. Stejskal	(STEJSKAL-GF-Y6594 @A1@SLSRP1)
TO:	Chuck Hayes	(HAYES-CR-Z9722 @A1@SLSRP1)
TO:	MONTE HAWKINS	(HAWKINS-M-O6779 @A1@SLSRP1)
TO:	BRUCE LAWRENCE	(LAWRENCE-BM-O4037 @A1@SLSRP1)
CC:	W. DANNY DUNAWAY	(DUNAWAY-WD-O7436 @A1@SLSRP1)
C:	J. V. ODUM	(ODUM-JV-O4184 @A1@SLSRP1)

W-0517 FRS

DON'T SAY IT - WRITE IT

DATE: 7/17/92

TO: MARCIA BIRK, 703-H

FROM: MONTE HAWKINS, 742-A MH

CHROMATED WATER BUILDING DRAIN SUMP

Attached is a copy of the September 2, 1988 Federal Register. The language on page 34080 seems to support a position that if the sump is a part of a Wastewater Treatment Unit that it would not be subject to RCRA. Therefore once the tank farm is under wastewater, assuming that the chromated cooling water system is ancillary equipment, then I believe we are OK as you are currently operating. In the meantime, I believe the way you are using the sump makes it a hazardous waste storage tank much like 299H. I'll be gone from July 17-27. We can discuss when I get back or you can contact Jill Suhm at 5-1793. Jill is aware of the situation.

cc: J. V. Odum, 742-A
B. M. Lawrence, 742-A
Bill Maloney, 742-A
Jill Suhm, 742-A

74:26 is given with the understanding that the State will revise as necessary its regulations to comply with Federal requirements after the decision in the *NRDC* v. *Thomas* remand is made. Today's action approves revisions to the existing NSR program.

EPA finds good cause exists for making the action taken in this notice immediately effective because the implementation plan revisions are already in effect under State law or regulation. EPA's approval poses no additional regulatory burden.

Under 5 U.S.C. 605(b), I certify that this SIP revision will not have a significant economic impact on a substantial number of small entities. (See 46 FR 8709.)

Under section 307(b)(1) of the Clean Air Act, petitions for judicial review of this action must be filed in the United States Court of Appeals for the appropriate circuit by November 1, 1988. This action may not be challenged later in proceedings to enforce its requirements. (see 307(b)(2).)

The Office of Management and Budget has exempted this rule from the requirements of section 3 of Executive Order 12291.

List of Subjects in 40 CFR Part 52

Air pollution control, Particulate matter, Sulfur oxides, Incorporation by reference.

Note: Incorporation by reference of the State Implementation Plan for the State of South Dakota was approved by the Director of the Federal Register on July 1, 1982.

Date: August 18, 1988.

Lee M. Thomas,

Administrator.

Part 52 Chapter I, Title 40 of the *Code of Federal Regulations* is amended as follows:

PART 52—[AMENDED]

Subpart QQ—South Dakota

1. The authority citation for Part 52 continues to read as follows:

Authority: 42 U.S.C. 7401–7642.

2. Section 52.2170 is amended by adding paragraph (c)(11) to read as follows:

§ 52.2170 Identification of plan.

* * * * *

(c) * * *

(11) On January 28, 1988, the Governor submitted a plan revision (1) updating citations to Federal regulations in the South Dakota air pollution control regulations (Administrative Rules of South Dakota 74:26), (2) adopting new ambient air quality standards for particulates (PM_{10}), (3) revising the State administrative procedures for handling permit hearings and contested cases, and (4) correcting deficiencies in the stack height regulations.

(i) Incorporation by reference

(A) Revisions to the Administrative Rules of South Dakota (ARSD) 74:26:01:12, ARSD 74:26:01:35, ARSD 74:26:01:37, ARSD 74:26:01:64, ARSD 74:26:08 through ARSD 74:26:23, inclusive, and addition of a new section, ARSD 74:26:02:35, were revised through November 24, 1987.

3. Add a new § 52.2180.

§ 52.2180 Stack height regulations.

The State of South Dakota has committed to revise its stack height regulations should EPA complete rulemaking to respond to the decision in *NRDC* v. *Thomas*, 838 F.2d 1224 (DC Cir. 1988). In a letter to Douglas M. Skie, EPA, dated May 11, 1988, Joel C. Smith, Administrator, Office of Air Quality and Solid Waste, stated:

"* * * We are submitting this letter to allow EPA to continue to process our current SIP submittal with the understanding that if EPA's response to the NRDC remand modifies the July 8, 1985 regulations, EPA will notify the State of the rules that must be changed to comport with the EPA's modified requirements. The State of South Dakota agrees to make the appropriate changes."

[FR Doc. 88–19165 Filed 9–1–88; 8:45 am]

BILLING CODE 6560–50–M

[FRL 3436–7]

40 CFR Parts 260, 264, 265, and 270

Hazardous Waste Management System; Standards for Hazardous Waste Storage and Treatment Tank Systems

AGENCY: U.S. Environmental Protection Agency.

ACTION: Final rule.

SUMMARY: The U.S. Environmental Protection Agency (EPA) is today providing an interpretation of certain terms and provisions, and correcting typographical and other errors, that originally appeared in the revised final standards for hazardous waste tank systems (51 FR 25422, July 14, 1986). These interpretations and amendments are being made in response to litigation and numerous inquiries that the Agency has received on certain aspects of the final rule.

EFFECTIVE DATE: September 2, 1988.

FOR FURTHER INFORMATION CONTACT: The RCRA/Superfund Hotline, (800) 424-9346 (in Washington, DC, call (202) 382-3000)), or William J. Kline, (202) 382-7917, Office of Solid Waste (OS-322), U.S. Environmental Protection Agency, 401 M Street SW., Washington, DC 20460.

SUPPLEMENTARY INFORMATION:

Table of Contents

I. Background
II. Discussion of Issues Requiring Interpretation
A. Scope of the Exemptions for Wastewater Treatment/Elementary Neutralization Tank Systems
1. Effect of Revised Tank System Standards on Wastewater Treatment/Elementary Neutralization Units
2. Clarification of "Wastewater Treatment Unit"
B. Issues Regarding the Secondary Containment Requirements
1. Welded Flanges
2. Applicability of Exemption for Certain Types of Joints and Connections
a. Plastic Piping Connections
b. Tubing Connections
i. Soldered and Brazed Joints
ii. Compression Fittings
iii. Flared-Fitting Joints
3. Exemption of Aboveground Sealless Valves
4. Extent of Required Leak Detection
5. Requirements for Concrete Liners
6. Secondary Containment of Pressurized Piping with Automatic Shut-off Devices
C. Application of Immediate Response Exemption to Sumps
III. Correction of Typographical Errors
IV. Compliance with Administrative Procedure Act Requirements

I. Background

On July 14, 1986, EPA issued a final rule that revised the standards for hazardous waste storage and treatment tank systems (51 FR 25422). Since then, the Agency has received requests for interpretation of a number of terms or provisions of the final rule, and has found several typographical errors in the rule. In addition, the revised tank system standards were challenged by industry petitioners in *Edison Electric Institute (EEI), et al.* v. *U.S. EPA*, No. 86-1549 (D.C. Circuit). This notice provides additional interpretation and clarification of the final rule, both in response to public inquiry and in settlement of the *EEI* litigation. This notice also corrects a number of typographical errors.

II. Discussion of Issues Requiring Interpretation

Three major areas of the final rule require further clarification: (1) The exemptions for wastewater treatment systems and elementary neutralization tank systems, (2) issues concerning secondary containment requirements, and (3) the applicability of the immediate response exemption under 40 CFR 265.1(c)(11) and 270.1(c)(3).

EPD FILE COPY

A. Scope of the Exemptions for Wastewater Treatment/Elementary Neutralization Tank Systems

1. Effect of Revised Tank System Standards on Wastewater Treatment/Elementary Neutralization Units

On November 17, 1980, EPA promulgated an amendment to the hazardous waste standards that suspended applicability of the requirements in 40 CFR Parts 122 (now codified in Part 270), 264, and 265 to owners and operators of wastewater treatment tanks and elementary neutralization tanks (45 FR 76074).

In the July 14, 1986, revised standards for hazardous waste tank systems (51 FR 25422), the Agency, in response to evidence indicating a high incidence of failures in piping and other equipment ancillary to tanks, made a special effort to focus on the proper management of such equipment. Thus, all equipment that is ancillary to the tank and used "to distribute, meter, or control the flow of hazardous waste from its point of generation to a storage or treatment tank(s), between hazardous waste storage and treatment tanks to a point of disposal on-site, or to a point of shipment for disposal off-site" was made subject to the revised standards (see definition of "ancillary equipment", 40 CFR 260.10). EPA used the term "tank system" to emphasize that both the tank and its ancillary equipment must be managed in accordance with the revised standards. EPA has received several inquiries regarding the extent to which the term "tank system" might result in previously exempt wastewater treatment/neutralization tanks being regulated by the revised hazardous waste tank system standards.

In the July 14, 1986, rulemaking, the Agency had no intention of altering the scope of the November 17, 1980, exemption for such units as provided under 40 CFR 264.1(g)(6), 265.1(c)(10), and 270.1(c)(2)(v) by subjecting the ancillary equipment of such exempt tanks to regulation. EPA attempted to make this point clear in the preamble of the revised standards (see 51 FR 25482). However, numerous parties believe the preamble language is still ambiguous. This ambiguity was also an issue in the *EEI* litigation. To add to the confusion of the status of these exemptions, EPA inadvertently neglected to amend the 40 CFR 260.10 definitions of "elementary neutralization unit" and "wastewater treatment unit" to reflect the Agency's intent to address hazardous waste tank systems, rather than simply hazardous waste tanks. In this notice, EPA corrects this oversight.

In order to remove any remaining ambiguity over this issue, EPA is today amending the wastewater treatment and elementary neutralization unit definitions to clarify that the exemptions apply to the tank systems, not just the tank. The only additional equipment intended to be covered under the revised standards was ancillary equipment that is associated with a regulated hazardous waste storage or treatment tank.

Thus, if a wastewater treatment or elementary neutralization unit is not subject to the RCRA Subtitle C hazardous waste management standards, the ancillary equipment connected to the exempted unit is likewise not subject to the Subtitle C standards. Similarly, the exemptions apply to sumps that meet the definition of a tank in 40 CFR 260.10 and that are used for the purpose of conveying hazardous wastewater to an exempted wastewater treatment or elementary neutralization unit (including conveyance by way of intermediate sumps, tanks, and holding ponds) since such sumps are ancillary equipment to the exempted tanks. Also, the revised hazardous waste tank system standards do not apply to ancillary equipment that is associated with hazardous waste management units other than storage or treatment tanks (*e.g.*, surface impoundments).

2. Clarification of "Wastewater Treatment Unit"

One of the conditions under 40 CFR 260.10 for qualifying as a wastewater treatment unit is that the unit must be part of a wastewater treatment facility that is subject to regulation under either section 402 or section 307(b) of the Clean Water Act. EPA has received numerous inquiries regarding the meaning of the term "wastewater treatment facility."

Based on EPA's property-boundary interpretation of the term "facility" under RCRA and the purpose of the exemption, which is to exclude tank systems subject to regulation under the Clean Water Act, it is EPA's position that in order for a wastewater treatment unit to be covered by the exemption, it must be part of an on-site wastewater treatment facility. Accordingly, any hazardous waste tank system that is used to store or treat the wastewater that is managed at an on-site wastewater treatment facility with an National Pollution Discharge Elimination System (NPDES) permit or that discharges to a Publicly Owned Treatment Works (POTW), is exempt from the RCRA regulations. Whether the wastewater is conveyed from the tank system directly to the treatment unit or indirectly by way of intermediate sumps, tanks or holding ponds does not affect the applicability of the exemption. For example, this exemption would apply if a sump is used to collect the rinse from periodic cleaning of utility boilers and this wastewater is then conveyed to a wastewater treatment unit at the same facility. Also, the means of conveyance of the waste between storage and treatment does not affect the applicability of this exemption. The applicability of the exemption does not depend on whether the wastewater is piped or trucked, or conveyed in any other manner to the wastewater treatment facility within the boundaries of the facility generating the wastewater. Likewise, the applicability of the exemption does not depend on whether the on-site wastewater treatment facility also treats wastewater generated off-site.

However, any tank system that was employed in managing wastewater at a facility prior to its off-site transfer to another location, whether or not the off-site location includes an NPDES permitted wastewater treatment facility, or a facility that discharges to a POTW sewer system, is not covered by this exemption.

EPA intends that this exemption apply to any tank system that manages hazardous wastewater and is dedicated for use with an on-site wastewater treatment facility. However, if a tank system, in addition to being used in conjunction with an on-site wastewater treatment facility, is used on a routine or occasional basis to store or treat a hazardous wastewater prior to shipment off-site for treatment, storage, or disposal, it is not covered by this exemption. Unless the tank system otherwise qualifies for some other exemption, it would be subject to the revised standards for hazardous waste tank systems.

A final clarification of this exemption concerns an on-site wastewater treatment facility that has no discharge to surface water. As previously stated in 45 FR 76078 (November 17, 1980), the wastewater treatment unit exemption is intended to cover only tank systems that are part of a wastewater treatment facility that (1) produces a treated wastewater effluent which is discharged into surface waters or into a POTW sewer system and therefore is subject to the NPDES or pretreatment requirements of the Clean Water Act, or (2) produces no treated wastewater effluent as a direct result of such requirements. This exemption is not intended to apply to wastewater

treatment units that are not required to obtain an NPDES permit because they do not discharge treated effluent.

B. Issues Regarding Secondary Containment Requirements

The Agency has also received numerous requests for interpretation of the regulatory provisions concerning the secondary containment requirements. The areas of confusion include: the meaning of welded flanges, the exemption for certain types of joints and connections, the exemption of above-ground sealless valves, the extent of required leak detection for concrete liners, and the secondary containment of pressurized piping with automatic shut-off devices.

1. Welded Flanges

The primary purpose of a flange is to enable connection of piping to vessels, pumps, valves, and other equipment. A flange connection provides an easy means of removing equipment from the pipe system for inspection, maintenance, repair, or replacement. Like other piping connections, flanges can be joined to piping by two basic techniques: threaded joints or metallurgical bonds (e.g., welds). If a piece of equipment is connected to piping by a threaded joint, it may be difficult to remove the equipment without disassembly of a portion of the piping system or without loosening other pipe-threaded connections. If the equipment is welded to the pipe, the pipe must be cut to remove the equipment. In contrast, equipment joined together with flanged connections can be easily removed by unbolting the flanges.

In §§ 264.193(f) and 265.193(f) of the revised hazardous waste tank system standards, EPA exempted welded flanges from the requirement to have secondary containment as long as the flanges were visually inspected on a daily basis. Numerous questions have been raised as to the intended meaning of the term "welded flange" because EPA did not define this term in the July 14, 1986, final rules. Apparently, several different meanings can be attributed to the term.

A term typically used in national piping codes, "welded flange" refers to welding only the piping to the flange. The flange-to-flange seal is achieved by mechanical seals, such as gaskets and o-rings. The flanges are usually held together by bolts. For a perfect seal, the bolt holes would have to be eliminated, and a circumferential weld made at the flange-to-flange joint. However, EPA is not aware of any national standards or codes that discuss this type of weld. And, most important, such a weld would defeat the purpose of the flange—i.e., to allow easy coupling and uncoupling of equipment from the piping system.

In exempting welded flanges from secondary containment, EPA intended to discourage the use of threaded joints, which EPA believes are susceptible to more frequent and larger quantities of releases than welded flanges. Threaded joints are used in metals where the walls are thick enough to withstand considerable pressure and corrosion after reduction in thickness due to threading. Threading is not a precise machining operation, and filler materials such as "pipe dope" are necessary to block the spiral leakage path.

Several characteristics of threaded joints make them more susceptible to leakage than welded flanges. Threads notch the pipe and reduce its strength and fatigue resistance. Enlargement and contraction of the flow passage at threaded joints creates turbulence. Thus, corrosion and erosion may be aggravated at the point where a pipe has already been thinned by threading. The tendency of pipe wrenches to crush pipes and fittings limits the torque available for tightening threaded joints thereby possibly excluding the necessary amount of tightening. For low-pressure systems, a slight rotation in the joint may be used to impart flexibility to the system, but this same rotation may cause leaks to develop in higher-pressure systems. In some metals, galling (i.e., a wearing down) occurs when threaded joints are disassembled.

Flanged joints come in a wide variety of types and facings. Welded-neck flanges provide joints as strong as the pipe under all types of static and cyclic loading. Slip-on, socket-weld, and lap-joint flanges provide joints as strong as the pipe under static loading but have lower resistance to cyclic stresses.

EPA realizes that flanged connections cannot be considered equivalent to an all-welded pipe system without flanges and will, therefore, pose a potential leak source. However, welded flanges eliminate, in EPA's opinion, the point of most probable leakage—i.e., the threaded pipe connection to the flange. With respect to potential leakage, flanges are superior to threaded connections because of the higher quality and more consistent workmanship and supervision associated with flange assembly and because of the inherent problems with threaded joints discussed above. While the flange-to-flange seals can leak, the occurrence of leakage from flanges is much lower than from threaded joints due to the larger seal surface area for the flange joint (a large surface on flange face versus a few sealing threads in the threaded connection). Also, with proper selection of bolt materials and washers, the mechanical seal can be kept under continuous compressive force, whereas the threaded joint relies on thread sealing compound to compensate for the contraction and expansion of the threaded joint. In any case, if a leak does occur in the mechanical seal it can be easily detected visually and corrected immediately.

Weld-neck and lap-joint flanges are preferable to socket-weld and slip-on flanges because they provide the greatest resistance to static stress. Socket-weld and slip-on flanges provide a lesser degree of structural integrity because the welds may eventually weaken, particularly from cyclical stress (vibration, hammering, opening/closing of valves, etc.). Nevertheless, EPA believes that any of these welded flanges, if properly specified, installed, inspected, and maintained in accordance with American National Standards Institute (ANSI), American Society for Testing and Materials (ASTM), and other piping component standards, and if properly managed in compliance with the revised hazardous waste tank system standards (e.g., compatibility, design certification, installation certification, inspections, and response to leak/spills), should pose a very low risk of leakage. For example, a properly designed piping system should take cyclical loading into account and use pulsation dampers, flex joints, expansion joints, etc., to eliminate or substantially minimize the effect of cyclical stresses. Thus, as specified on the revised tank system rules, the Agency believes secondary containment is not necessary for aboveground welded flanges (i.e., welded at the joint of the pipe to the flange) that are visually inspected on a daily basis. For the purpose of §§ 264.193(f) and 265.193(f) EPA interprets the term "Welded flange" to mean weld-neck, lap-joint, slip-on, and socket-weld flanges.

2. Applicability of Exemption for Certain Types of Joints and Connections

Since promulgation of the revised tank system standards, EPA has received numerous inquiries regarding the intended scope of the exemption from secondary containment for welded joints and welded connections. For example, inquirers have requested clarification on the applicability of this exemption to plastic piping connections, and compression, soldered/brazed and other tubing connections.

A wide diversity of joints/connections can be used in the construction of a hazardous waste tank system. Considering the broad spectrum of reliability that can be expected of the joint/ connection, given such variables as material of construction, method of joining, quality control of joint/ connection assembly, etc., the issue is which types of joints/connections are sufficiently "welded" so as to be exempt from the requirement of secondary containment.

In general, and as previously discussed, one of EPA's main concerns lies with threaded fittings and joints. As explained below, fittings and joints that avoid the inherent problems associated with threaded fittings and joints, and that thereby provide a more reliable connection, are the types of fittings and joints most likely to be considered "welded" (that is to say, permanently joined in such a fashion as to be comparable to welding in reliability) and thus eligible for exemption from the secondary containment requirement. This exemption is only applicable to aboveground piping systems that are visually inspected on a daily basis.

a. *Plastic piping connections.* Plastic pipe and fittings may be joined by a solvent-cement, by heat fusion, or by a mechanical device such as threads or a ring seal. A brief description of each type of joint is given below:

- Solvent cement softens the surfaces of the components, which then solidify as the solvent evaporates.
- With heat fusion, the surfaces are heated with special tools until they have softened. When engaged, the softened surfaces flow together, forming a joint as the material cools. There are three basic types of heat-fused joints: butt fused, socket or insert fused, and saddle fused.
- Mechanical means or devices can be used to develop a pressure seal. Types of mechanical joints include threaded joint, compression gasket joint, compression fitting joint, clamped insert-fitting joint, bell-and-spigot gasket or push-on joint, flanged joint, and flare joint.

Of all the joining techniques, solvent-cementing and heat fusion can be considered equivalent to welding in metal pipe systems. In both cases, the plastic is melted or "welded" together. The choice of the particular bonding depends on the type of plastic. Polyvinylchloride (PVC) and chlorinated polyvinylchloride (CVPC) pipes are solvent cemented, but polyvinylidene fluoride (PVDF) and polypropylene (PP) pipes require heat fusion, since they are not susceptible to solvent cementing. As with all joining techniques, the leak characteristics depend on the quality of workmanship involved. If the plastic components are properly joined, the risk of leakage should be the same as that of welded pipe.

According to ASTM standards, the pressure rating of solvent-cemented joints, properly fabricated, is equivalent to the pressure rating for the original pipe, after a reasonable time has been allowed for the joint to cure. The pressure rating of well-made, heat-fused joints is the same as the pressure rating for the original pipe after the material in the joint has cooled to the pipe temperature.

However, EPA notes that care must be taken in the selection and application of a particular plastic pipe. The pipe must be suitable for the internal fluid and the external conditions. For example, some pipes may need to be wrapped to prevent stress cracking from ultraviolet light.

Flared-tube joints, insert fittings, and threaded joints are not as reliable as heat fusion and solvent-cement joining techniques and have a greater incidence of leaks than do the welded pipes. Of these, threaded joints have the greatest likelihood of leaking, insert fittings the next greatest, and flared-tube joints the least likelihood of the three.

Depending on the type of material and/or the manufacturer, certain joining devices may lower the maximum pressure rating of the piping system. Typically, threaded and mechanical joints of particular plastics may lower the maximum pressure rating (of the pipe joined) by as much as 50 percent.

Given this information, EPA is convinced that solvent-cemented and heat-fused connections in plastic piping systems are analogous to welded metallic connections and should thus be considered "welded" for purposes of the exemption from secondary containment requirements under 40 CFR 264.193 and 265.193. Mechanical joints, however, would need secondary containment.

The methods used to join plastic pipes and fittings depend on the type of plastic(s) being joined. Applicable ASTM practices should be consulted to ensure that the method used is compatible with the materials being joined. In addition, the recommendations of the manufacturer should be considered when determining which method and the details of the procedure to be used.

The ASTM standards provide specifications, test methods, practices, and guides for plastic pipes and fittings made from these plastics. Plastic pipes and fittings made from several other types of plastic—most notably polypropylene (PP) and poly(vinylidene fluoride)(PVDF)—are commonly available in a wide variety of sizes. However, they are not covered as such by ASTM specifications.

b. *Tubing connections.* Since promulgation of the revised standards for hazardous waste tank systems, the Agency has received numerous questions concerning the equivalence of tubing components to all-welded piping. These components, used in making connections to valves, instruments, pressure gauges, and other ancillary devices, employ soldered and brazed joints, compression-fittings, and flared-fitting joints.

EPA does not have sufficient information to determine that these types of connections are equivalent to "welding" and thus is not exempting these connections from the requirement of secondary containment. The Agency believes that further consideration of an exemption for these connections is necessary and welcomes any data that addresses the reliability of these connections.

i. *Soldered and brazed joints.* Soldering is a metal-joining process wherein a nonferrous alloy is heated to a suitable temperature and fused to the metals being joined. The filler metal (solder) is distributed between closely fitted surfaces of the joint by capillary attraction. In general, solders are lead-tin alloys and may contain antimony, bismuth, and other elements.

Soldered joints are most widely used in pipe or tubing sizes 2 inches and smaller where the heat requirements are less burdensome. Properly made, the joints are completely impervious. Soldered joints should not be used in areas where plant fires are likely because exposure to fire rapidly and completely melts the joints. Nor should they be used where the pipe contains flammable or toxic fluids or where the piping is subject to thermal shock or mechanical vibrations.

Brazing is a metal-joining process wherein a nonferrous metal is heated to a suitable temperature and fused to the metals being joined. The filler metal is distributed between the closely fitted surfaces of the joint by capillary attraction.

Silver-brazed joints are similar to soldered joints, except they require a temperature of about 1100°F for fusion to occur. Silver-brazed joints are used where temperature or the combination of temperature and pressure is beyond the range of soldered joints. They are also more reliable in the event of plant fires and are more resistant to vibration.

Braze welding is a welding process using a nonferrous filler metal having a melting point below that of the base

metals, but above 800 °F (427 °C). The filler metal is not distributed in the joint by capillary attraction.

EPA believes that soldered and brazed fittings are not equivalent to welded piping. Regardless of how well these joints are made, they will continue to be a greater source of leakage than a welded connection, which has the strength of the pipe itself. However, if installed properly and within their design limitations, EPA believes that these joints have a very low risk of leakage. If a leak does occur, it should be visually detected in most circumstances, and tubing normally has a piping take-off valve for isolation. Tubing also generally has small bores so leaks will normally be minor, except in high-pressure service.

Although the Agency acknowledges that these types of connections are somewhat less reliable than a welded connection, EPA believes that the combination of a relatively low risk of leakage, the required compliance with standards for proper design, installation, and inspection, and the impracticality of designing secondary containment for such connections may make a reasonable case for exempting these connections from the requirement for secondary containment. The Agency is continuing to study this issue and may amend the regulations in the future to provide such an exemption for these connections.

ii. *Compression Fittings.* A compression fitting can be an integral part of a tank system component (e.g., the fitting is built into the valve or pressure gauge), or it can be a separate piece that is threaded to the component. These fittings are used where the tubing has too high a ratio of wall thickness to diameter for flaring or where the tubing lacks sufficient ductility for flaring. The seal is made by a ferrule ring that is slipped over the end of the tube and compressed onto the tube by a compression nut on the fitting. The ferrule ring has two sealing surfaces: a smooth-bore inner-diameter surface that is compressed onto the tube surface, and a smooth conical-shaped outer-diameter surface that makes a metal-to-metal seal to a matching machined-cone surface in the body or housing of the compression fitting. The sleeve must be considerably harder than the tubing, yet still ductile enough to be diametrically compressed. It also must be as resistant as the tubing to corrosion by the fluid handled. Because the ferrule is under great compression force, a very tight seal is obtained. This force is usually sufficient to overcome differences in coefficients of thermal expansion of the materials used for the tube and fitting, normal vibration, and other factors that would cause threaded joints to leak.

Properly designed and manufactured compression fittings rarely leak. They are used in highly critical applications, such as connections for fuel lines and hydraulic systems on aircraft. Flareless compression fittings are used extensively and can be designed for systems up to 60,000 pounds per square inch gauge (psig). The ANSI B31.3 Code lists no restrictions for compression fittings, except that they be safeguarded if used in severe cyclic conditions. Leaks, when they occur, are usually attributed to one of the following causes:

—Dirt or debris trapped on the sealing surface;

—Improper torqueing (too loose or over-tightening);

—Wear or scoring from excessive removal and reinstallation of the connection;

—Damage from handling during installation or removal; or

—Excessive vibrations or bending moments at the tube-to-fitting interface.

EPA believes that compression fittings used on metallic tubing may be nearly as reliable as welded connections. EPA is considering amending the rules to exempt metal tubing that uses compression fittings (but not with a threaded connection between the fitting and device) from the secondary containment requirement.

The Agency is convinced, however, that secondary containment should be required for plastic piping connections that use compression fittings. Although plastic piping can be joined in a manner similar to compression fittings for metal piping, the technique is substantially different. Since metals are ductile, the ferrule metal seal and the tubing are both actually compressed by the compression nut. On the other hand, plastics are not as ductile or as strong as metals, and a seal is made by the much lower compressive force of an elastomer sealing ring. Thus, EPA does not believe that these plastic systems afford sealing equivalent to that of solvent-cemented or fused joints.

iii. *Flared-fitting joints.* Flared-fitting joints are used for ductile tubing in cases where the ratio of wall thickness to the diameter is small enough to permit flaring without cracking the inside surface. The tubing must have a smooth interior surface. A flared fitting that employs a sleeve avoids torsional strain on the tubing and minimizes vibration fatigue on the flared portion of the tubing. More labor is required for assembly, but it is more resistant to temperature cycling than other tubing fittings and is unlikely to be damaged by over-tightening. For these fittings, less control of tube diameter is required.

The Agency believes that flared-fitting joints, although not as reliable as compression fittings, still present a low risk of leakage. However, given the lack of available data on the reliability of flared-fitting joints, EPA is unable at this time to determine whether these joints should be exempted from the requirement of secondary containment. The Agency may consider this issue in a future rulemaking.

3. Exemption of Aboveground Sealless Valves

As previously discussed, 40 CFR 264.193 and 265.193 of the final rule exempt certain aboveground piping system components from the secondary containment requirement. EPA has received several inquiries regarding an apparent inconsistency between the discussion of these exemptions in the preamble (51 FR 25450, July 14, 1986) and the list of exemptions codified in 40 CFR 264.193(f)(1)–(4) and 265.193(f)(1)–(4) (51 FR 25475 and 25481). Sealless pumps are exempted under §§ 264.193(f) and 265.193(f) because they do not use traditional packing materials, which are a common source of leakage. Similarly, the Agency intended to exempt sealless valves, as mentioned in the preamble discussion, provided that a welded connection is used to join the sealless valve to the piping. However, the regulatory exemption refers to sealless pumps, but not sealless valves. Thus, today EPA is correcting its omission of sealless valves from the regulatory language of 40 CFR 264.193(f)(3) and 265.193(f)(3) by adding sealless valves to the list of piping components that need not be provided with secondary containment.

4. Extent of Required Leak Detection.

Sections 264.193(b) and 265.193(b) set out the performance standards for secondary containment systems. Additional details on how to meet these performance standards are found in §§ 264.193(c) and 265.193(c). EPA has received several inquiries regarding the intent of the wording in 40 CFR 264.193(c)(3) and 265.193(c)(3) which states that secondary containment systems must be:

> Provided with a leak-detection system that is designed and operated so that it will detect the failure of either the primary or secondary containment structure or the presence of any release of hazardous waste or accumulated liquid in the secondary containment system within 24 hours * * *.

Numerous inquirers took this provision to mean that the Agency was intending that a leak detection capability be provided both within, and external to, the secondary containment structure. Several other inquirers requested clarification of whether the Agency requires detection of failure of either the primary or secondary containment structures or the presence of any release, or both.

Under this provision, EPA intended that the leak detection component of a secondary containment system promptly detect any release from the primary structure into the secondary containment structure. EPA used the wording, "Provided with a leak detection system that is designed and operated so that it will detect failure of either the primary or secondary containment structure", to ensure that double-walled tanks which detect failure of either the primary or the secondary containment structure (e.g., via loss of pressure in the interstitial space between the two walls) meet the requirements of §§ 264.193(b) and 265.193(b). This provision should not be interpreted to require leak detection outside of the secondary containment structure in order to detect failure of the secondary containment structure.

5. Requirements for Concrete Liners

In 40 CFR 264.193(e) (1) and (2), and 265.193(e) (1) and (2), EPA promulgated standards applicable to external liners and vault systems. The external liner requirements of 40 CFR 264.193(e)(1) and 265.193(e)(1) address the subject of liners generically. For example, they do not differentiate between synthetic membrane liners and concrete. On the other hand, the requirements for vault systems under 40 CFR 264.193(e)(2) and 265.193(e)(2) are applicable only to concrete.

However, EPA did not intend that concrete used, for example, as a base and diking material for secondary containment of an aboveground tank or onground tank should be subject to requirements significantly different from concrete that is used in the construction of a secondary containment vault. Certain of the requirements promulgated for concrete vaults are appropriate and are intended to be applied to situations where concrete is used in the construction of any secondary containment structures. Thus, concrete liner systems must also meet the more specific requirements of 40 CFR 264.193(e)(2) (iii) and (iv) and 265.193(e)(2) (iii) and (iv) in order to meet the general performance standards under 40 CFR 264.193(e)(1) (iii) and (iv) and 265.193(e)(1) (iii) and (iv), which specify that the liner system be free of cracks or gaps and designed to prevent migration of the waste. Chemical-resistant water stops at all joints, as specified in 40 CFR 264.193(e)(2)(iii) and 265.193(e)(2)(iii) are appropriate for any concrete structure serving as a secondary containment device. Likewise, given the relative permeability of concrete, the Agency believes that most secondary containment concrete structures, vaults or otherwise, will require an impermeable coating or lining that will prevent migration of waste into the concrete as specified in 40 CFR 264.193(e)(2)(iv) and 265.193(e)(2)(iv). Such coating or lining must also be compatible with the waste(s) managed within the secondary containment structure.

6. Secondary Containment of Pressurized Piping with Automatic Shut-Off Devices.

EPA has received a number of questions regarding the exemption from secondary containment of pressurized piping with automatic shut-off devices.

Under 40 CFR 264.193(f)(4) and 265.193(f)(4), aboveground pressurized piping systems with automatic shutoff devices that are visually inspected on a daily basis are exempt from the secondary containment requirement. Furthermore, this provision allows this exemption even if welded flanges, welded joints, welded connections, sealless valves, and sealless or magnetic coupling pumps are not used. However, the Agency is reconsidering this exemption. EPA may have over-estimated the effectiveness of automatic shut-off devices. Although these devices should certainly limit the quantity of waste released in case of a substantial failure somewhere in the piping system (e.g., pipe rupture), they would be unlikely to have any effect on reducing the number or size of releases in piping systems due to small or slow leaks at valves, connections, flanges, etc.

It was not EPA's intent to prescribe less importance to small leaks in pressurized piping systems. In fact, such less-than-major leaks would be of greater concern in pressurized piping systems compared to nonpressurized systems due to the potential to release larger quantities of hazardous waste.

Thus, the Agency believes that it may be prudent to require all aboveground piping systems, pressurized as well as nonpressurized, and even with automatic shut-off devices, to use welded joints, sealless valves, sealless or magnetic coupling pumps, etc., in order to be exempted from the secondary containment requirement. In fact, automatic shut-off devices may also need to be welded so as not to be a source of leakage. Using this approach, automatic shut-off devices might be used to protect against catastrophic releases and serve as a means to limit the size of the secondary containment system(s), where needed, rather than serve as a means for the entire piping system to be exempted from secondary containment. EPA is considering proposing such an amendment to the tank system standards in the near future.

C. Extent of Cathodic Protection for Primary Tanks

EPA received several inquiries regarding the intent of the 40 CFR 264.193(e)(3)(ii) and 265.193(e)(3)(ii). That regulation specifies double-walled tanks must be "protected, if constructed of metal, from both corrosion of the primary tank interior and of the external surface of the outer shell * * *." Apparently, this wording has been interpreted to mean that cathodic protection must be provided for the interior surface of the primary tank. This was not EPA's intent.

With respect to the interior of the primary tank, this requirement was chiefly intended to address the excessive or accelerated corrosion of the primary tank's interior surface resulting from incompatibility between the tank construction material and the stored waste(s). This provision thus reiterates the requirement found elsewhere in the standards (e.g., 40 CFR 264.191(b), 264.192(a)), that accelerated corrosion of the primary tank's interior surfaces must be prevented. However, this provision does not mandate cathodic protection of the interior surface of primary tank structures.

D. Application of the Immediate Response Exemption to Sumps

As part of the settlement of the *EEI* litigation, EPA agreed to clarify the applicability of the immediate response exemption under 40 CFR 264.1(g)(8) and 265.1(c)(11) to sumps. The July 14, 1986, final rule discussed three types of sumps that may be regulated as tanks under this revised rule: "temporary tanks," secondary containment sumps, and primary containment tanks. With respect to temporary tanks, i.e., tanks used for storage of waste in response to a leak or spill, and other temporary, unplanned occurrences, the Agency stated that no Subpart J standards were applicable since such storage was exempted from these regulatory requirements under 40 CFR 264.1(g)(8) and 265.1(c)(11) (51 FR 25445). Those sections (along with 40 CFR 270.1(c)(3))

exempt any person from permitting requirements and regulatory standards for "treatment or containment activities taken during immediate response to * * * [a] discharge of a hazardous waste", except requirements concerning preparedness and emergency procedures. The purpose of the exemption is to allow appropriate immediate response to hazardous waste discharges in emergency situations where treatment or storage is necessary but the facility owner or operator would not have had sufficient previous warning to comply with regulatory standards or obtain a RCRA permit for such treatment or storage (51 FR 25445, July 14, 1986); (48 FR 2508, January 19, 1983). A sump that may be used to collect hazardous waste in the event of a spill, whether accidental or intentional, and that is not designed to serve as a secondary containment structure for a tank storing hazardous waste, is generally exempt from regulatory and permitting requirements so long as it is used to contain hazardous waste only as an immediate response to such a spill.

Sumps that serve as part of a secondary containment system, i.e., to collect spills from a primary containment vessel storing hazardous waste, are subject to all applicable requirements for tank systems except for the requirement to obtain secondary containment. (51 FR 25441, July 14, 1986). In contrast to "temporary tanks", secondary containment sumps and all other secondary containment structures, are specifically designed to serve as the collection device for spills of hazardous waste from an adjacent primary containment vessel.

Finally, except as noted in section II.A. above, sumps that store hazardous waste as primary containment vessels are subject to all tank system requirements, including the requirement to obtain secondary containment (or a variance). Primary containment sumps are sumps designed to collect and transport routine and systematic discharges of hazardous waste (51 FR 25441, July 14, 1986). Sumps designed to serve as the storage for hazardous waste from periodic cleaning of utility boilers, for example, are primary containment vessels, although as explained above they will still qualify for an exemption from the tank system requirements if they are used as ancillary equipment to an exempted wastewater treatment or elementary neutralization unit. See Section II.A. *supra*.

In short, upon consideration of 40 CFR 264.1(g)(8) and 265.1(c)(11) and the interrelationship of these provisions with the July 14, 1986 final rule, EPA believes that some sumps may be exempt from regulation under this provision. This interpretation is consistent with the preamble discussion of the spill exemption provision (48 FR 2508, January 19, 1983). As explained in that preamble, the purpose of the provision was to address emergency situations, whether due to accidental discharges or to spills during routine maintenance of equipment, where there is no time to comply with technical and procedural requirements pertaining to storage and treatment of hazardous waste (48 FR 2508, January 19, 1983). This rationale is inapplicable to units constructed for the purpose of containing hazardous waste from routine and systematic discharges of hazardous waste or designed to serve as the secondary containment for a tank system treating or storing hazardous waste.

III. Correction of Typographical Errors

On August 15, 1986, EPA published in the **Federal Register** a notice of corrections to the revised final tank system standards (51 FR 29430). Since that time, a number of additional typographical or coding errors in the final rules or in the notice of corrections have been brought to EPA's attention.

Several coding errors were a result of EPA's omission on several occasions of the word "system" when the term "tank system" as opposed to "tank" was intended to be used. In general, it is the Agency's intent that both a regulated hazardous waste tank and its ancillary equipment be subject to the revised standards of July 14, 1986. As such, EPA promulgated a definition of "tank system." Although the Agency tried to ensure that the term "tank system" was incorporated, wherever applicable, into the final rule, EPA apparently overlooked several situations where this term should have been likewise inserted. As previously discussed in Section II.A.1, the definition of "elementary neutralization unit" and "wastewater treatment unit" should have included the term "tank system." Likewise, the word "system" was inadvertently omitted from 40 CFR 264.190 and 265.190. In these paragraphs, the exemption from secondary containment was intended to apply to any tank and its ancillary equipment, i.e., any portion of the tank system, situated inside a building with an impermeable floor. In 40 CFR 264.190(b) and 265.190(b) a different omission occurred. Although the Agency's intent is not to require secondary containment of tank systems, including sumps, that serve the purpose of secondary containment, EPA does intend that these secondary containment systems, or portions thereof, must meet the design, installation, and operation requirements for a secondary containment system in accordance with 40 CFR 264.193(b)–(i) and 265.193(b)–(i). It is EPA's intent that these units be exempted only from 40 CFR 264.193(a) and 265.193(a), that, in any case, is redundant of the provision requiring secondary containment.

Another omission occurred in 40 CFR 264.193(f) and 265.193(f) in that EPA neglected to include aboveground sealless valves under the exemption from secondary containment. As evidenced in the preamble discussion for the July 14, 1986 standards (51 FR 25450), it was the Agency's intent that the exemption be applicable to these valves. A detailed discussion of this omission is provided in Section II.B.3.

EPA, in the process of including tank systems in the applicability section of the closure and post-closure requirements in Subpart G (40 CFR 265.110), inadvertently deleted the previously existing 40 CFR 265.110(b)(2), that addresses the applicability of Subpart G to waste piles and surface impoundments. Consistent with 40 CFR 264.110, EPA is today reinstating this provision in 40 CFR 265.110 and renumbering the paragraph as applied to tank systems. Today's rule also incorporates a conforming change into 40 CFR 264.114 and 265.114. In the revised tank system standards, EPA promulgated specific closure and post-closure care requirements in 40 CFR 264.197 and 265.197 and stated that tank systems also must meet the requirements of Subparts G and H, unless otherwise specified. EPA neglected to make the cross-reference in 40 CFR 264.114 and 265.114 to allow alternate post-closure care for certain tank systems as specified in CFR 264.197 and 265.197.

Several typographical errors have also been brought to the Agency's attention. In the first Note for 40 CFR 264.196 and 265.196, the reference to RCRA section 3004(u) and 3004(w), respectively, is a mistake. The correct reference should be RCRA section 3004(v). Another typographical error appeared in 40 CFR 265.201(c)(3) where a wrong citation of a paragraph was made. Instead of referring to "40 CFR 265.192(c)," a provision that has nothing to do with the level of waste in a tank, "40 CFR 265.201(b)(3)" requiring that uncovered tanks be operated to ensure at least 60 centimeters of freeboard, should have been cited. In this notice, EPA is also correcting these errors.

IV. Compliance With Administrative Procedure Act Requirements

Section 553(b) of the Administrative Procedure Act generally requires proposal of administrative rulemakings to receive public comment prior to promulgation. However, section 553(b) excludes certain types of rules from the prior notice-and-comment requirement, including interpretative rules and rules for which public comment is unnecessary. Because today's notice includes only interpretative statements concerning existing hazardous waste tank system requirements and minor technical corrections, prior notice and the solicitation of public comment on this notice is unnecessary.

List of Subjects in 40 CFR Parts 260, 264, 265, and 270

Administrative practice and procedure, Environmental protection, Hazardous waste, Tank systems, Waste storage and treatment, Water pollution control, Water supply.

Dated: August 24, 1988.

J.W. McGraw,

Acting Assistant Administrator, Office of Solid Waste and Emergency Response.

For the reasons set out in the Preamble, Title 40 of the Code of Federal Regulations is amended as follows:

PART 260—HAZARDOUS WASTE MANAGEMENT SYSTEM: GENERAL

40 CFR Part 260 is amended as follows:

1. The authority citation for Part 260 continues to read as follows:

Authority: Secs. 1006, 2002(a), 3001 through 3007, 3010, 3014, 3015, 3017, 3018, and 3019 of the Solid Waste Disposal Act, as amended by the Resource Conservation and Recovery Act of 1976, as amended (42 U.S.C. 6905, 6912(a), 6921 through 6927, 6930, 6934, 6935, 6937, 6938, and 6939).

2. Section 260.10 is amended by revising the following definitions in alphabetical order:

§ 260.10 Definitions.

* * * * *

"Elementary neutralization unit" means a device which: (1) Is used for neutralizing wastes that are hazardous only because they exhibit the corrosivity characteristic defined in § 261.22 of this chapter, or they are listed in Subpart D of Part 261 of the chapter only for this reason; and

(2) Meets the definition of tank, tank system, container, transport vehicle, or vessel in § 260.10 of this chapter.

* * * * *

"Wastewater treatment unit" means a device which: (1) Is part of a wastewater treatment facility that is subject to regulation under either section 402 or 307(b) of the Clean Water Act; and

(2) Receives and treats or stores an influent wastewater that is a hazardous waste as defined in § 261.3 of this chapter, or that generates and accumulates a wastewater treatment sludge that is a hazardous waste as defined in § 261.3 of this chapter, or treats or stores a wastewater treatment sludge which is a hazardous waste as defined in § 261.3 of this Chapter; and

(3) Meets the definition of tank or tank system in § 260.10 of this chapter.

PART 264—STANDARDS FOR OWNERS AND OPERATORS OF HAZARDOUS WASTE TREATMENT, STORAGE, AND DISPOSAL FACILITIES

40 CFR Part 264 is amended as follows:

3. The authority citation for Part 264 continues to read as follows:

Authority: Secs. 1006, 2002, 3004, and 3005 of the Solid Waste Disposal Act as amended by the Resource Conservation and Recovery Act of 1976, as amended (42 U.S.C. 6905, 6912(a), 6924, and 6925).

4. Section 264.114 is amended by revising the first sentence to read as follows:

§ 264.114 Disposal or decontamination of equipment, structures and soils.

During the partial and final closure periods, all contaminated equipment, structures and soils must be properly disposed of or decontaminated unless otherwise specified in §§ 264.197, 264.228, 264.258, 264.280 or § 264.310. * * *

5. Section 264.190 is amended by revising the first sentence of paragraph (a) and by revising paragraph (b) to read as follows:

§ 264.190 Applicability.

* * * * *

(a) Tank systems that are used to store or treat hazardous waste which contains no free liquids and are situated inside a building with an impermeable floor are exempted from the requirements in § 264.193. * * *

(b) Tank systems, including sumps, as defined in § 260.10, that serve as part of a secondary containment system to collect or contain releases of hazardous wastes are exempted from the requirements in § 264.193(a).

* * * * *

6. Section 264.193 is amended by revising paragraph (f)(3) to read as follows:

§ 264.193 Containment and detection of releases.

* * * * *

(f) * * *

(3) Sealless or magnetic coupling pumps and sealless valves, that are visually inspected for leaks on a daily basis; and

* * * * *

7. Section 264.196 is amended by revising the first Note to read as follows:

§ 264.196 Response to leaks or spills and disposition of leaking or unfit-for-use tank systems.

* * * * *

Note.—The Regional Administrator may, on the basis of any information received that there is or has been a release of hazardous waste or hazardous constituents into the environment, issue an order under RCRA section 3004(v), 3008(h), or 7003(a) requiring corrective action or such other response as deemed necessary to protect human health or the environment.

* * * * * *

PART 265—INTERIM STATUS STANDARDS FOR OWNERS AND OPERATORS OF HAZARDOUS WASTE TREATMENT, STORAGE, AND DISPOSAL FACILITIES

40 CFR Part 265 is amended as follows:

8. The authority citation for Part 265 continues to read as follows:

Authority: Secs. 1006, 2002(a), 3004, 3005, and 3015, Solid Waste Disposal Act, as amended by the Resource Conservation and Recovery Act, as amended (42 U.S.C. 6905, 6912(a), 6924, 6925, and 6935).

9. Section 265.110 is amended by redesignating existing paragraph (b)(2) as (b)(3), and adding a new paragraph (b)(2) to read as follows:

§ 265.110 Applicability.

* * * * *

(b) * * *

(2) Waste piles and surface impoundments for which the owner or operator intends to remove the wastes at closure to the extent that these sections are made applicable to such facilities in § 265.228 or § 265.258; and

* * * * *

10. Section 265.114 is amended by revising the first sentence to read as follows:

§ 265.114 Disposal or decontamination of equipment, structures and soils.

During the partial and final closure periods, all contaminated equipment, structures and soil must be properly disposed of, or decontaminated unless specified otherwise in §§ 265.197, 265.228, 265.258, 265.280, or 265.310. * * *

11. Section 265.190 is amended by revising the first sentence of paragraph (a) and by revising paragraph (b) to read as follows:

§ 265.190 Applicability.

* * * * *

(a) Tank systems that are used to store or treat hazardous waste which contains no free liquids and that are situated inside a building with an impermeable floor are exempted from the requirements in § 265.193. * * *

(b) Tank systems, including sumps, as defined in § 260.10, that serve as part of a secondary containment system to collect or contain releases of hazardous wastes are exempted from the requirements in § 265.193(a).

* * * * *

12. Section 265.193 is amended by revising paragraphs (f)(3) and (g)(3)(iii) to read as follows:

§ 265.193 Containment and detection of releases.

* * * * *

(f) * * *

(3) Sealless or magnetic coupling pumps and sealless valves, that are visually inspected for leaks on a daily basis; and

* * * * *

(g) * * *

(3) * * *

(iii) If contaminated soil cannot be removed or decontaminated in accordance with paragraph (g)(3)(ii) of this section, comply with the requirements of § 265.197(b);

* * * * *

13. Section 265.196 is amended by revising the first Note to read as follows:

§ 265.196 Response to leaks or spills and disposition of leaking or unfit-for-use tank systems.

* * * * *

Note.—The Regional Administrator may, on the basis of any information received that there is or has been a release of hazardous waste or hazardous constituents into the environment, issue an order under RCRA section 3004(v), 3008(h), or 7003(a) requiring corrective action or such other response as deemed necessary to protect human health or the environment.

* * * * *

14. Section 265.201 is amended by revising paragraph (c)(3) to read as follows:

§ 265.201 Special requirements for generators of between 100 and 1,000 kg/mo that accumulate hazardous waste in tanks.

* * * * *

(c) * * *

(3) The level of waste in the tank at least once each operating day to ensure compliance with § 265.201(b)(3);

* * * * *

PART 270—EPA ADMINISTERED PERMIT PROGRAMS: THE HAZARDOUS WASTE PERMIT PROGRAM

40 CFR Part 270 is amended as follows:

15. The authority citation for Part 270 is revised to read as follows:

Authority: 42 U.S.C. 6905, 6912, 6924, 6925, 6927, 6939, and 6974.

16. Section 270.2 is amended by revising the following definitions in alphabetical order:

§ 270.2 Definitions.

* * * * *

Elementary neutralization unit means a device which: (a) Is used for neutralizing wastes only because they exhibit the corrosivity characteristic defined in § 261.22 of this chapter, or are listed in Subpart D of Part 261 of this chapter only for this reason; and (b) Meets the definition of tank, tank system, container, transport vehicle, or vessel in § 260.10 of this chapter.

* * * * *

Wastewater treatment unit means a device which:

(a) Is part of a wastewater treatment facility which is subject to regulation under either section 402 or 307(b) of the Clean Water Act; and

(b) Receives and treats or stores an influent wastewater which is a hazardous waste as defined in § 261.3 of this chapter, or generates and accumulates a wastewater treatment sludge which is a hazardous waste as defined in § 261.3 of this chapter, or treats or stores a wastewater treatment sludge which is a hazardous waste as defined in § 261.3 of this chapter; and

(c) Meets the definition of tank or tank system in § 260.10 of this chapter.

* * * * *

[FR Doc. 86-19630 Filed 9-1-86; 8:45 am]
BILLING CODE 6560-50-M

FEDERAL EMERGENCY MANAGEMENT AGENCY

44 CFR Part 64

[Docket No. FEMA 6806]

Suspension of Community Eligibility; Alabama et al.

AGENCY: Federal Emergency Management Agency, FEMA.

ACTION: Final rule.

SUMMARY: This rule lists communities, where the sale of flood insurance has been authorized under the National Flood Insurance Program (NFIP), that are suspended on the effective date shown in this rule because of noncompliance with the revised floodplain management criteria of the NFIP. If FEMA receives documentation that the community has adopted the required revisions prior to the effective suspension date given in this rule, the community will not be suspended and the suspension will be withdrawn by publication in the Federal Register.

EFFECTIVE DATE: As shown in fifth column.

FOR FURTHER INFORMATION CONTACT: Frank H. Thomas, Assistant Administrator, Office of Loss Reduction, Federal Insurance Administration, Federal Center Plaza, 500 C Street SW., Room 416, Washington, DC 20472, (202) 646-2717.

SUPPLEMENTARY INFORMATION: The NFIP enables property owners to purchase flood insurance at rates made reasonable through a Federal subsidy. In return, communities agree to adopt and administer local floodplain management measures aimed at protecting lives and new construction from future flooding. Section 1315 of the National Flood Insurance Act of 1968, as amended (42 U.S.C. 4022), prohibits flood insurance coverage as authorized under the NFIP (42 U.S.C. 4001-4128) unless an appropriate public body shall have adopted adequate floodplain management measures with effective enforcement measures.

On August 25, 1986, FEMA published a final rule in the Federal Register that revised the NFIP floodplain management criteria. The rule became effective on October 1, 1986. As a condition for continued eligibility in the NFIP, the criteria at 44 CFR 60.7 require communities to revise their floodplain management regulations to make them consistent with any revised NFIP regulation within 6 months of the effective date of that revision or be subject to suspension from participation in the NFIP.

The communities listed in this notice have not amended or adopted floodplain management regulations that incorporate the rule revision. Accordingly, the communities are not compliant with NFIP criteria and will be suspended on the effective date shown in this final rule. However, some of these communities may adopt and submit the required documentation of legally enforceable revised floodplain management regulations after this rule is

INTER-OFFICE MEMORANDUM
Savannah River Site

Date: 14-Jul-1992 09:15am EDT
From: Matthew A. Hunter
HUNTER-MA-L2335 AT A1 AT SASRS2
Dept: WMT
Tel No: x7-1447/bp# 6761

TO: Charles R. Hayes (HAYES-CR-Z9722 @A1@SLSRP1)

Subject: RHLWE GDL

Chuck,

Next time you talk to Larry could you run something past him for me. The Replacement High Level Waste Evaporator is going to have a process sewer line that will connect to the ETF process sewer line (permit #13,105). This line is to be above ground the entire length of the line (about 750 ft.) and will regularly contain overheads with a concentration that may exceed the hazardous determination limit. This will run out the tank farm security fence along and up and over the railroad tracks, then into an existing manhole. This line will be insulated and heat traced for its entire length. This will require an aluminum jacket (non-water tight) in order to protect cold weather protection.

It is assumed that the FFA will impose the same standards as RCRA for above ground lines. This line then has to either be inspected daily or have secondary containment. The line probably would not be seen up close because of it going over the road or being outside of the security fence. I am fighting with the project people because the line is already designed and spec'ed out as a single shelled line and they don't want to change things unless they have to. Please let me know what you find out or if I need to contact some one else to get an nswer.

Meet w/ Gerry/Bake/Monte

8/20
Matt says they decided to go with sec. containment.

South Carolina
DHEC
Department of Health and Environmental Control
2600 Bull Street, Columbia, SC 29201

Commissioner: Michael D. Jarrett

Board: William E. Applegate, III, Chairman
John H. Burriss, Vice Chairman
Richard E. Jabbour, DDS, Secretary
Tonoy Graham, Jr., MD
Sandra J. Molander
John B. Pate, MD
Robert J. Stripling, Jr.

Promoting Health, Protecting the Environment

3:30 Mtg. to discuss TF comments

July 7, 1992

Mr. J.V. Odum, Manager
Facility Support Section
Environmental Protection Department
Westinghouse Savannah River Co.
P.O. Box 616
Aiken, SC 29802

Re: Phase I and II Assessment Reports
High-Level Radioactive Waste Tank Farms
SRS F/H Area
Aiken County

Dear Mr. Odum:

This letter is in response to the May and August, 1991 Phase I and Phase II Assessment Reports, submitted as a requirement of Section IX of the Draft Federal Facilities Agreement (FFA), for the F and H-Area High-Level Radioactive Waste Tank Farms and associated systems.

The Assessment Reports were evaluated for conformance with section IX of the FFA by this office and The Environmental Protection Agency's (EPA) Region IV office. EPA's comments and concerns were submitted to this office and combined with the Departments comments to form this response.

The attached comments address areas in which additional information is needed to demonstrate that the high-level waste tank systems are adequately designed and meet all requirements of the Agreement.

Your response to the comments should be in the form of an amendment to or revision of the original reports and should be certified by the Engineer who certified the original reports. On receipt of your response, our review will continue.

In reviewing the Assessment Reports it appears that the Department shares two concerns with EPA regarding tank usage. The first is DOE's requested approval of seven Type I waste tanks (Nos. 2 through 8) as having equivalent devices for secondary containment. It is the opinion of this office and EPA that this structure does not meet all of the criteria for a secondary containment vault. However, this office concurs with the opinion of EPA that the unleaking Type I Tanks (Tanks 2 through 8) could be used for emergency waste receipt and storage provided additional information is submitted which adequately addresses and allows for the evaluation of the following matters:

RA - current quantities of wastes in the tanks,

w/FFA - NOT BEFORE - the schedule for removing the existing tank wastes,

RA - the potential for future cracking of these tanks if their waste levels are

increased,

RA - the ability of the leak detection and removal systems to prevent overtopping of the containment pans, and

CAN GET - what are the potential scenarios that would constitute an emergency to warrant the use of these tanks.

The second concern is the inability of DOE's tank inspection procedures to observe 100% of the tank sidewalls. Our concern is that there may be undetected leak sites which may become active when waste removal operations begin, presenting a threat of release to the environment.

CAN GET

Another concern of this office is the use of Tank 13 (Type II Tank) on a continuous basis as an evaporator feed tank with predominately liquid contents. This tank has documented leaks which will undoubtedly become more active when operations begin. Adding to the concern is the fact that this particular type of tank, specifically Tank 16, has documented leaks which were not contained and impacted the surrounding soils.

Based on our review of the information provided, it is the opinion of this office that all Type I, II, and IV tanks (excluding the unleaking Type I Tanks mentioned above) which have leaked or which do not meet the secondary containment requirements of the Draft FFA, be repaired as required by the Draft FFA or removed from service in accordance with Subsection E, Section IX of the Agreement.

If you should have any questions please call me at (803)734-5251.

Sincerely,

Larry E. Arrington
Industrial & Agricultural
Wastewater Division

cc: Lower Savannah EQC
Victor Weeks, EPA
Danny Dunaway, Westinghouse-SRC

(1) INCLUDE TANK LEAK DIAGRAM AS ATTACHMENT
(2) " " INSPECTION REPORT "

PHASE I ASSESSMENT REPORT

The permittee has elected to demonstrate that the secondary containment systems for the ITP equipment meet the requirements of Appendix B, Section C of the FFA. These demonstrations can be provided instead of structural integrity assessments for the tank systems. In this regard, the following comments must be addressed in order to demonstrate compliance with the secondary containment and release detection requirements.

SECTION 3.1: TANKS 48 AND 49

Subsection 3.1.2: Waste Compatibility

- (1) Describe the operating practices and management procedures that are used to ensure that the internal cooling systems and annulus vent systems are in proper working condition at all times. For example, describe the controls, alarms, monitoring, inspection and maintenance procedures that are employed for the various systems during normal operations and potential problem scenarios. Also discuss the equipment and procedures used to detect malfunctions in the cooling systems, as well as leaks in the tank systems where the cooling systems may be capable of detecting such problems.

- (2) Although the annulus vent systems have HEPA filters and condensate traps, demonstrate that they will not result in airborne releases from the secondary containment system if a large leak occurs from the primary tank shell.

- (3) Discuss the history of any cooling system (cooling coils and annulus ventilation) failures, the consequences of a failure, and any actions that need to be taken if the annulus cooling system becomes inoperative due to a large leak (e.g., liquid fills the annulus vent duct slots and/or the bottom air flow slots).

- (4) Provide more detail on the monitoring of the nitrogen blanket which is maintained in tanks where the potential for explosive gas formation exists, specifically, how the blanket integrity is monitored and maintained.

- (5) The report discusses the importance of maintaining the chemistry of the waste and other parameters within certain bounds to prevent stress corrosion cracking (scc) of the tank shells. However, the specific ranges or limits for pH, nitrite, nitrate, temperature, tank shell stress, etc. that are needed to prevent SCC have not been provided. Therefore, describe the concentrations of the various constituents that must be maintained in the tanks, including allowable temperatures and stresses. Provide details regarding the important interdependencies among the various parameters (i.e., as the level of each parameter changes, describe how the others are affected and/or how they must be modified to prevent further SCC).

- (6) Also discuss the specific procedures and equipment used to monitor each

parameter and maintain the proper concentrations/levels of all parameters, from initial receipt of the waste in the tanks through its final removal.

Subsection 3.1.3: Foundation Support

- Demonstrate that the containment system has adequate support against failure due to settlement or compression, especially when it (or the contained tank) is full of waste. Also, discuss why this tank system base appears less substantial than the one constructed for the smaller hold tank system (section 3.2.3).

Subsection 3.1.4: Leak Detection/Inspections

- (1) Provide details about the "visual monitoring" that is mentioned in the first paragraph of this report section.

- (2) Describe how small leaks (i.e., those not large enough to activate the conductivity probes) will be detected and properly removed within 24 hours. If such leak detection and removal is not possible within 24 hours, describe the system modifications that will be implemented to meet this requirement, or demonstrate that existing technologies do not allow detection and removal within 24 hours.

(3) Discuss the types and frequencies of any tests that are used to ensure that all leak detection probes are in proper working order.

(4) State the maximum time required to remove wastes from the tank secondary containment system either by using the waste removal jet pump and/or by lowering the tank level. If this time is greater than 24 hours, describe the modifications that will be implemented to meet this time requirement, or demonstrate that such timely removal is not technologically feasible.

- (5) Include a discussion as to how a leak in the secondary containment structure would be detected.

Subsection 3.1.5: Past Leaks

- Provide justification for the statement that no leaks have been detected in any of the Type IIIA Waste Tanks, including consideration of small leaks on the tank bottoms that cannot be detected visually or electronically and may be evaporated by the annulus cooling system.

SECTION 3.2: ITP FILTRATE HOLD TANKS

Subsection 3.2.1: Design Information

- (1) Provide design details which show that the stainless steel liner is continuous and prevents leakage at all tank leg pedestals, pump pads, pipe penetrations through walls and floors, and other such susceptible locations.

- (2) Furnish information as to whether or not the gutter and sump are lined with stainless steel. If stainless steel is not provided, discuss how leaks will be prevented from migrating into or through the concrete and any gaps.

- (3) The text and Figure 3-7 indicate that the stainless steel liner is essentially in contact with the adjacent walls. However, Figure 3-8 shows a considerable distance between the liner and walls. Resolve this discrepancy.

- (4) The report states that the containment system height in the ITP hold tank area will be raised above the top of the existing stainless steel liner. Describe the methods that will be used to place the grout between the existing liner and walls. (For example, simply "pouring" the grout into a narrow space will generally not ensure complete or crack-free filling of that space.) Further, describe the measures that will be taken to ensure liquid-tight contact between the liner and grout, and the grout and walls, so that cracks or gaps which could allow leakage do not develop at these interfaces.

- (5) Provide further details to show that the "minimum vertical containment height of 16 inches along each wall of the hold tank area" is adequate to provide 12,000 gallons of containment, since the floor slopes 4-1/2 inches.

- (6) Explain the significance of the term "non-coated" when referring to the containment area in the stripper building.

- (7) The information in the report does not clearly show that a large leak, especially a rapid one, will pass through the 6 by 6 inch opening into the stripper building before it escapes through a door. Provide clarification. Include elevations of the entry ways into this room and composition of the 6" square gravity drain.

- (8) The last sentence of the last paragraph of this section (on page 33) states "additional secondary containment is provided to a height (approximately 18 inches in the hold tank area)". However, previous discussions refer to an epoxy (i.e., containment) height of 16 inches. Clarify or resolve this discrepancy.

Subsection 3.2.2: Waste Compatibility

- (1) Provide vendor information to show that the epoxy coating is compatible with the anticipated ranges of constituents, pH, radiation levels and other characteristics of the waste to be contained.

- (2) Provide more detail on the monitoring of the nitrogen blanket in the hold tanks, specifically how the blanket integrity is monitored and maintained.

Subsection 3.2.4: Leak Detection/Inspections

- Due to the location of "high liquid level" probes in the sump, and the potentially long travel distance across the room to the sump, discuss

how relatively small leaks will be detected within 24 hours. Also provide details about the sump pump to demonstrate that it can remove 12,000 gallons within 24 hours.

SECTION 3.3: ANCILLARY EQUIPMENT

Subsection 3.3.1.1: Design Information

- (1) Describe how the containment liner is designed at the filter pedestals and any other raised equipment supports to prevent leakage behind this liner.

- (2) Provide details about the ventilation ducts to show that any pressurized leaks (i.e., sprays) from the filters or pipes will not be able to enter the ducts and escape the containment system.

Subsection 3.3.1.4: Leak Detection/Inspections

- With the liquid level probes located in the sumps and set at a height of 5 inches, describe how small leaks will be detected and removed within 24 hours. If such leak detection and removal is not possible within 24 hours, describe the system modifications that will be implemented to meet this requirement, or demonstrate that existing technologies do not allow detection and removal within 24 hours.

Subsection 3.3.2.1: Design Information

- (1) Provide information which illustrates whether or not the square gravity drains through the walls are provided with stainless steel liners, and if they are continuously welded to the liners in the stripper area rooms.

- (2) Also show how the secondary containment liners are designed at the pump pedestals and any other raised equipment supports to prevent leakage behind the liners at these locations.

- (3) Describe how any leakage above the upper (i.e., second floor) stripper supports will be prevented from leaving the Stripper Room. Figure 3-13 shows a potential pathway from the Stripper Room to the Break Water Room at this level. Otherwise, describe the secondary containment system within the Break Water Room.

Subsection 3.3.2.2: Waste Compatibility

- (1) Discuss whether or not there is a potential for leaks in the stripper area to escape the secondary containment system via the ventilation system (as was the case for the ITP Filter Cells).

Subsection 3.3.2.4: Leak Detection/Inspections

- Due to the location of "high liquid level" probes in the sump within the ITP Filtrate Hold Tank Room, and the long travel distance across two to three rooms to this sump, discuss how relatively small leaks from this

equipment will be detected and removed within 24 hours.

PHASE II ASSESSMENT REPORT

Many of the waste tank systems, components and/or ancillary equipment are known to leak, do not have secondary containment which meets the requirements of the FFA, or as in the case of five Type IV Tanks, waiting to be cleaned and decommissioned. According to Paragraph IX.E.I of the FFA, such units require plans and schedules to remove them from service or to provide adequate secondary containment. Also, the FFA requires that the report contain proposed methods and a schedule for ongoing demonstrations that the tank system(s) are not leaking. These plans and schedulos were not contained in this report. Therefore, submit the appropriate plans and schedules.

The report did not contain a discussion of any contingency plans or emergency procedures that are in place or will be in place during tank farm operation. A discussion of these plans and procedures should be submitted.

Subsections 3.1.1, 3.1.2, 3.2.2 and 3.3.2: Design Information/Waste Compatibility

- (1) Describe the operating practices and management procedures that are used to ensure that the internal cooling systems and annulus vent systems are in proper working condition at all times. For example, describe the controls, alarms, monitoring, inspection and maintenance procedures that are employed for the various systems during normal operations and potential problem scenarios. Also discuss the equipment and procedures used to detect malfunctions in the cooling systems, as well as leaks in the tank systems where the cooling systems may be capable of detecting such problems.

- (2) Although the annulus vent systems have HEPA filters and condensate traps, demonstrate that they will not result in airborne releases from the secondary containment system if a large leak occurs from the primary tank shell.

- (3) Discuss the history of any cooling system (cooling coils and annulus ventilation) failures, the consequences of a failure, and any actions that need to be taken if the annulus cooling system becomes inoperative due to a large leak (e.g., liquid fills the annulus vent duct slots and/or the bottom air flow slots).

Subsections 3.1.2, 3.2.2, 3.3.2, 3.4.2: Waste Compatibility; Subsections 4.1.2, 4.2.2, 4.4.2: Waste Characteristics; and Attachments B and C

- (1) The report discusses the importance of maintaining the chemistry of the waste and other parameters within certain bounds to prevent stress corrosion cracking (scc) of the tank shells. However, the specific ranges or limits for pH, nitrite, nitrate, temperature, tank shell

stress, etc. that are needed to prevent SCC have not been provided. Therefore, describe the concentrations of the various constituents that must be maintained in the tanks, including allowable temperatures and stresses. Provide details regarding the important interdependencies among the various parameters (i.e., as the level of each parameter change, describe how the others are affected and/or how they must be modified to prevent further SCC). Also discuss the specific procedures and equipment used to monitor each parameter and maintain the proper concentrations/levels of all parameters, from initial receipt of the waste in the tanks through its final removal.

Subsections 3.1.3, 3.2.3, 3.3.3, 3.4.3, 3.5.3, 3.6.3, 4.1.1, 4.2.1, 4.4.1 and 4.5.1: Foundation Support

- Demonstrate that the containment systems and/or tanks have adequate support against failure due to inadequate bearing capacity or excessive settlement or compression, especially when the units are full of waste.

Subsections 3.5.3 and 3.8.3: Foundation Support

- Provide details to show that leakage will not occur at the anchor bolts used to fasten the stainless steel liners to the underlying concrete. In Section 3.5.3, stainless steel to stainless steel contact will typically not prevent leakage. Demonstrate the compatibility between any caulking-type material that is used for this purpose and the wastes managed.

Subsections 3.1.4, 3.2.4, 3.3.4, 3.5.4, 3.6.4, 3.7.1.4, 3.7.3.4, 3.7.4.4 and 3.8.4: Leak Detection/Inspections

- (1) Demonstrate that all leak detection systems for all tanks and ancillary equipment are capable of detecting any size leak (especially small ones) within 24 hours, and that the removal systems can also properly remove any leaks within 24 hours. Adequate removal (and possibly tank emptying) capabilities are especially important for tanks that do not have full secondary containment and pump the leaked materials from the annulus pans back into the leaking tanks. If leak detection and removal is not possible within 24 hours, describe the system modifications that will be implemented to meet this requirement, or demonstrate that existing technologies do not allow detection and removal within 24 hours.

- (2) Discuss how the leak detection and removal systems are tested and maintained to ensure they are working properly at all times, and how frequently such tests and repairs are performed.

- (3) Also, discuss monitoring of the soil immediately surrounding the tanks.

Subsections 3.1.5, 3.2.5, 3.4.5, 4.1.5, 4.2.5 and 4.4.5: Past Leaks

- (1) The report does not provide information regarding existing crack and leak site locations, the number of cracks or leak sites per tank, potential flow rates through the leak sites, or the current levels of liquid, semi-solid and solid waste layers in the tanks. It also does not evaluate the current stress levels at crack and leak sites, or evaluate

the future performance of the tanks when they are filled and agitated during future waste removal operations. These aspects appear to be very important since the stress corrosion cracking (which has reportedly caused the cracks) is highly influenced by the presence of supernate and high stresses (both of which will be present during waste removal). Therefore, provide the information outlined above.

(2) Discuss the potential for new crack initiation, and propagation of existing cracks, during future waste removal operations. Also describe the steps that will be taken to control leaks, stresses, crack propagation and initiation, etc. during waste removal.

(3) Provide information regarding the expected leakage rates of the various tanks during waste removal operations (e.g., quantity, and will they "spray" onto unlined concrete if under high head). Also demonstrate that the containment and removal systems will be capable of preventing releases of these leaks to the environment (e.g., they have adequate pumping rates, available alternate storage capacity for removed leaks, free of cracks and gaps, etc.).

Subsections 3.7.1.1 and 3.7.3.1: Design Information

The concrete, trench-like encasements and cement-asbestos jackets used for secondary containment are known to allow groundwater infiltration in some areas (i.e., they leak). Discuss what plans are in place to repair these breaches of the secondary containment system. Also describe the types of coatings or interior liners used to prevent any releases from migrating into the concrete or cement of these structures. Further, discuss the condition of all joint fillers, caulking, gaskets, etc. used in these encasements and jackets, as well as their compatibility with the wastes managed.

Subsections 3.5.1, 3.7.1.3, 3.7.2.3, 3.7.3.3, 3.7.4.3 and 4.5.5: Foundation Support

The report states that no specific design standards were used for these pipes, that most of them are buried below grade, and that a minimum soil cover thickness has not been established for pipes at the site. Discuss the precautions that have been taken to prevent damage to these waste pipes or their secondary containment devices due to vehicle traffic and any other surface loads.

Subsections 3.7.1.6, 3.7.2.6, 3.7.3.6 and 3.7.4.6: Determination of Secondary Containment

Section 3.7.1.5 states that "As with many waste transfer lines, the secondary containment terminates at the outer surface of the concrete walls of the boxes, risers, or similar containment structures penetrated by primary lines." Therefore, it appears that many waste transfer lines do not have liquid-tight secondary containment. Describe the measures that will be implemented to identify and repair these deficiencies in the secondary containment systems for all transfer pipes.

SECTION 3.1: Type I WASTE TANKS

Subsection 3.1.1: Design Information

- The text and Figure 3-1 do not clearly indicate that the leak pans are continuous under the Type I tanks. Provide additional information regarding the continuity of these pans.

Subsection 3.1.2: Waste Compatibility

- For the Type I tanks that have leaked, discuss the presence of salt cake in the containment pan and on the tank sides, and any potential corrosion or cracking in accordance with the comment for Section 3.2.2 below.

Subsection 3.1.4: Leak Detection/Inspections

- (1) Clarify if the fill limit probes are always located 10 inches below the lower of the two possible fill levels (i.e., below the design fill limit or the lowest leak site, whichever is lower).

- (2) Discuss soil monitoring immediately surrounding the tanks.

Subsection 3.1.6: Secondary Containment Determination

(1) The permittee has requested that Tanks 2 through 8, inclusively, be approved as having equivalent secondary containment devices. However, the assessment report does not include several important pieces of information, as outlined below.

- (2) Discuss what methods have been used to determine if cracks or gaps are present in the concrete structure surrounding the tank and containment pan. Also discuss the size and locations of any such cracks that have been found, and their potential for allowing waste migration through them.

- (3) Demonstrate that the seal between the top of the containment pan and the adjacent concrete wall will not provide a release pathway if the pan is overtopped. (Based on the information provided, this appears to have been a factor for Tank 16.)

- (4) Discuss the waste removal capabilities (i.e., pumping rates, availability of alternate waste storage space, etc.) in the event of a catastrophic failure of these tanks at all times during future operations.

- (5) Also, discuss how it can be concluded that Tanks 2 through 8 have no cracks and are not leaking when it is stated in Appendix D of the assessment that 100% of the primary tank wall cannot be viewed or photographed.

SECTION 3.2: TYPE II WASTE TANKS

Subsection 3.2.1: Design Information

- Detail A on Figure 3-2 is very unclear. Provide clarifications about the material types, locations and thicknesses of all materials used to construct the tank system's bases and sides.

Subsection 3.2.2: Waste Compatibility

- This section states that dried salt cake is present in the containment pans. It also says that, "The inspection program has shown no visible adverse effects on the secondary containment pan" due to the dried salt cake. Discuss how the visual inspections can "see through" the salt cake and provide enough evidence to ensure that corrosion or cracking is not occurring as a result of the leaked waste. This includes the containment pan and outside of the waste tanks.

Subsection 3.2.4: Leak Detection/Inspections

- Discuss soil monitoring in the area immediately surrounding the tanks.

SECTION 3.3: TYPE III WASTE TANKS

Subsection 3.3.1: Design Information

- Discuss the source of the small amounts of liquid that is removed by the annulus ventilation system.

Subsection 3.3.5: Past Leaks

- Provide justification for this statement, including consideration of small leaks on the tank bottoms that cannot be detected visually and may be evaporated by the annulus cooling system.

SECTION 3.4: TYPE IV WASTE TANKS

Subsection 3.4.1: Design Information

- (1) Expanded vermiculite was used around the tank walls "to provide a cushion for thermal expansion of the tank due to heat generated by the waste." Discuss the potential for cracks to be generated in the concrete structural walls due to these thermal deflections, and any potential cracking or buckling of the steel tank walls that could occur because of the different thermal expansion properties of the steel and concrete.

- (2) The second paragraph on page 64 states that "hydraulic forces are not of concern for these type tanks located in F-Area since the water table is typically lower than the tanks. Tanks 21-24 in the H-Area are also above the water table". However, the third paragraph on that page states that "For Type IV Waste Tanks, which do not have an annular space, hydraulic forces would be expected on the tank." Resolve this apparent discrepancy.

- (3) Discuss why ballast water is needed in these tanks if they are above the water table. If ballast water is indeed required in these tanks when they are out of service for extended periods, discuss why such water would not be needed if the tanks were to be empty for short periods of time.

- (4) Discuss how the tanks will be emptied during and after waste removal operations if ballast water is required to

Subsection 3.4.4: Leak Detection/Inspections

- (1) Provide additional design details about the bottom leak collection system and detection sump to show that it functions as planned, and is not a release pathway for leakage (i.e., does not have cracks or gaps that would allow migration). Also discuss how often it is monitored, and what tests are performed to detect leakage.

- (2) Provide details to show how "Two vertical pipes, 180 degrees apart, connect the sidewall leak detection channel to the bottom leak detection channel." Figure 3.5 shows the vertical pipes outside the area of the bottom channels.

- (3) Discuss how often the sidewall leak detection system is monitored, and what tests are performed to detect leakage. Also provide information about the levels to which "perched" groundwater is allowed to rise before it is removed, and how long this water is allowed to accumulate before it is removed.

- (4) Discuss how sidewall leaks are monitored for F-Area tanks.

- (5) Provide details about the waste level monitoring systems in these tanks, including type, frequency of readings and sensitivity to changes in the waste levels.

- (6) Also include a discussion of soil monitoring immediately surrounding the tanks.

Subsection 3.4.5: Past Leaks

- Discuss how the crack was discovered in Tank 20. State whether any further investigation for cracks was performed, and if any cracks were found as a result, in Tank 20 after it was emptied. Discuss future uses for this tank. Since Tank 20 has no sidewall monitoring, discuss the potential that such leaks have gone undetected.

SECTION 3.5: EVAPORATORS

Subsection 3.5.1: Design Information

- (1) Provide details to show how the stainless steel liners for evaporators 242-F and 242-H are connected to the walls. The report does not indicate

that this is done in such a way as to prevent leakage at this connection. Also provide this information for the hold tank cell liners for evaporators 242-16F and 242-16H.

- (2) Provide design details which show that the stainless steel liners for all evaporators are continuous and prevent leakage at all tank leg pedestals, sumps, pump pads, pipe penetrations through walls and floors, and other such susceptible locations. Also provide this information for the hold tank cell liners for evaporators 242-16F and 242-16H.

- (3) Discuss the size of the gravity drain line from evaporator 242-H to Tank 13, and evaluate the capability/speed of this line to drain a large, rapid release to that tank (i.e., will it prevent overtopping of the 18 inch deep pan).

- (4) Provide details regarding the design of the concrete berms in all hold tank cells.

- (5) Page 75 and Figure 3-7 show that the condenser cells drain into the evaporator cells. Discuss whether or not these drain holes are lined to prevent migration of wastes into the concrete. Also provide information to illustrate how these drains and evaporator cell liners are designed to prevent leakage of wastes behind the liners.

- (6) The report states that "The transfer lines to and from the CRC for evaporators 242-F and H are not jacketed." Discuss how secondary containment will be provided for these pipes. Also discuss if there are any other waste transfer lines associated with the F and H Area Tank Farms that do not have secondary containment.

SECTION 3.6: PUMP PITS

Subsection 3.6.1: Design Information

- (1) Provide details of the secondary containment features for HPPI. Alternatively, state that it is permanently out of service and completely disconnected so that it cannot receive wastes in the future. If HPPI is permanently out of service, was the unit closed under a plan approved by the State. If not, submit a closure plan for the unit.

- (2) Demonstrate that the stainless steel liners for all pump pits are continuous and prevent leakage at all sumps, pipe penetrations and other such susceptible locations.

Subsection 3.6.5: Past Leaks

- Describe the methods used to "discover" any leaks through the stainless steel liners.

SECTION 3.7: TRANSFER LINES

Subsection 3.7.1.1: Design Information

- Demonstrate how it is known that "in leakage" occurs through joints in the concrete cover slabs only, and not through side or bottom joints or cracks, especially since more infiltration occurs in areas where the water table is "higher". If this cannot be demonstrated, describe the measures that will be implemented to repair the secondary containment.

Subsection 3.7.1.4: Leak Detection/Inspection

- The report is rather sketchy about design and operational details, pumping rates, etc. for the catch tanks and their encasements. Provide sufficient details to demonstrate that these units perform as required and do not leak. Also discuss how the unlined concrete encasements, which receive all wastes before the catch tanks do, prevent migration of the wastes into or through the concrete and any cracks, gaps or joints in the encasements. Further, discuss the final disposition of any wastes collected in the catch tanks.

Subsection 3.7.1.5: Past Leaks

- Clarify whether the secondary containment systems have been repaired at all interfaces between Type I pipe encasements and boxes and risers, or if this was done only at those which have leaked in the past. Provide details to demonstrate that liquid-tight seals have been created at these interfaces and penetrations.

- Subsection 3.7.2.1: Design Information

This section states that "Infiltration of groundwater or precipitation into the Type II/IIA transfer lines does not normally occur." Discuss whether such infiltration has ever occurred, as well as how it was detected and repaired.

Subsection 3.7.2.4: Leak Detection/Inspections

- (1) Describe what type of "normal surveillance" or operator suspicion, other than finding liquids via the leak detection equipment, would prompt an operator to conduct an air leak test. Also discuss which sections of this type of pipe are "amenable to the test", and which are not.

- (2) Provide details to demonstrate that all joints between secondary containment jackets, drain pipes, LDBs, diversion boxes, pump pits, overflow drains, waste tanks, drain cells, final catchment, etc. are continuous and liquid-tight.

Subsection 3.7.2.5: Past Leaks

- (1) Discuss whether any of the first 3 leaks that are listed released outside of secondary containment.

- (2) For the third leak listed, describe what precautions are in place to prevent leakage from the condensate drain that was installed.

- (3) Discuss why the fourth leak is so difficult to locate, current

investigative measures, and why this occurrence will not be duplicated.

Subsection 3.7.3.1: Design Information

- Demonstrate that all rubber ring seals, which are known to deteriorate in radiation fields, are still liquid-tight and will remain so throughout the remaining active lives of these pipes.

Subsection 3.7.3.2: Waste Compatibility

- (1) This section states that "The sodium hydroxide that is added to the wastes to inhibit nitrate induced SCC, also seems to facilitate compatibility with the cement-asbestos jacket." Explain how this occurs if the waste has never come into contact with the cement-asbestos (as indicated in Section 3.7.3.5 Past Leaks).

Subsection 3.7.3.5: Past Leaks

- This section states that groundwater has infiltrated the containment jacket of one pipe. Discuss whether this pipe is still in service. If so, discuss what measures have been or will be taken to repair this leak.

SECTION 3.8: DIVERSION BOXES

Subsection 3.8.1: Design Information

- (1) Demonstrate that the unlined diversion boxes (FDBI, HDBI and HDB3) will not allow migration of wastes into or through the concrete, as well as through any construction joints, gaps or cracks. Section 4.8.2 of the WWTF Permit Application indicates that these unlined DBs are coated with water proofing compounds, but no mention of such compounds is made here. Resolve this discrepancy.

- (2) Demonstrate that the lined structures provide liquid-tight secondary containment in accordance with Section c of Appendix B of the FFA. This appears especially important in light of the many pipe penetrations through the walls of these structures, and due to the comment made in Section 3.7.1.5 of the report regarding the discontinuity of secondary containment at pipe-to-box interfaces.

- (3) Provide design details about the drain line from FDBI to the F-Area catch tank, including how the pipe is sealed to the DB and catch tank to prevent leakage at these joints.

- (4) Page 121 states that "Water stops seem to have been included in all of the construction joints." Provide details to support this conclusion.

Subsection 3.8.5: Past Leaks

- Sections 3.8.3 and 3.8.5 show that some of the stainless steel liners have buckled. Discuss what types of tests or inspections have been performed on the remaining DBs to ensure that they are not leaking.

Subsection 3.8.6: Secondary Containment Determination

- Section 3.8.5 states that the unlined DBs (and apparently FDB2) allow "inleakage of groundwater or precipitation." That is, they leak. Provide additional evidence to support the conclusion that such DBs meet the requirements of secondary containment as outlined in the FFA.

SECTION 4.4: TYPE IV WASTE TANKS

Subsection 4.4.2: Waste Characteristics

- Demonstrate that all leak sites will be identified for these tanks before using them to receive low level radioactive process wastewaters, and that the tanks will not be filled above their lowest leak sites. The demonstration should include a method of determining where the lowest leak sites may be given that 100% of the tank wall cannot be viewed by current techniques.

Subsection 4.4.5: Integrity Examination

- 1 This section states that "Five of the eight tanks are essentially empty (except for ballast water)", while Attachment A shows them all to contain LHW, salt cake or sludge. Resolve this discrepancy.
- 2 Discuss the potential for not yet discovered leaks below the waste levels in these tanks, and their impacts during waste removal operations.

SECTION 4.5: EVAPORATORS

Subsection 4.5.5: Integrity Examination

- Provide details regarding the design of the manholes in the gravity drain line from evaporator 242-H to the F/H ETF process sewer. This should include details about the connection of pipes to the manholes to ensure liquid-tight seals. Provide similar information for all other manholes in any transfer lines and IALs.

SECTION 4.6: PUMP PITS

Refer to comments for Section 3.6 regarding pump pits.

SECTION 4.7: WASTE PIPING

Refer to comments for Section 3.7 regarding transfer lines.

SECTION 4.8: DIVERSION BOXES

Refer to comments for Section 3.8 regarding diversion boxes.

W-0517

INTER-OFFICE MEMORANDUM
Savannah River Site

Date: 18-Jun-1992 07:14am EDT
From: Charles R. Hayes
HAYES-CR-Z9722
Dept: EPD
Tel No: X58838

TO: See Below

Subject: SIMULANT RUNS AT ITP (U)

The proposed temporary storage of the ITP simulant in a tanker truck prior to its introduction into Tank 48 will require prior written approval from SCDHEC. We may be able to accomplish this simply by letter of approval. I don't think SCDHEC will have a problem with the proposal but since it is not covered in the permit application, we need their buy-in.

Let me know (X5-8838) if you have any questions.

Distribution:

TO:	TIMOTHY P. GAUGHAN	(GAUGHAN-TP-O8815 @A1@SASRS2)
CC:	Barbara J. Clark	(CLARK-BJ-L2439 @A1@SASRS2)
CC:	W. DANNY DUNAWAY	(DUNAWAY-WD-O7436)
CC:	MONTE HAWKINS	(HAWKINS-M-O6779)
CC:	M.T. Keefer	(KEEFER-MT-O7775 @A1@SASRS2)
CC:	CARY B. STEVENS	(STEVENS-CB-O5981 @A1@SASRS2)
CC:	Bill Van Pelt	(VANPELT-WB-O7016 @A1@SASRS2)

W-0517
File

UNITED STATES ENVIRONMENTAL PROTECTION AGENCY

REGION IV

345 COURTLAND STREET, N.E.
ATLANTA, GEORGIA 30365

JUN 17 1992

RECEIVED
ENVIRONMENTAL PROTECTION SECTION
WESTINGHOUSE SAVANNAH RIVER CO.

CERTIFIED MAIL
RETURN RECEIPT REQUESTED

4WD-FFB

Mr. M. F. Sadler
Director, Industrial and Agricultural
Wastewater Division
South Carolina Department of Health
and Environmental Control
2600 Bull Street
Columbia, South Carolina 29201

Re: HIGH LEVEL WASTE TANK ASSESSMENT REPORTS
F- AND H-AREA TANK FARMS
SAVANNAH RIVER SITE, AIKEN, SOUTH CAROLINA

Dear Mr. Sadler:

The Environmental Protection Agency (EPA) has completed its review of the structural integrity and secondary containment assessment reports for the new and existing tanks in the F- and H-Area Tank Farms at the Savannah River Site (SRS). The enclosed comments document EPA's concerns about the "As-Built Construction Permit Application" and the Phase I and Phase II "Assessment Reports" for the F and H-Area High-Level Radioactive Waste Tank Farms. The review was performed to evaluate the assessment reports' conformance with Section IX and Appendix B of the Draft SRS Federal Facility Agreement (FFA).

One of EPA's concerns is that in the "Phase II Assessment Report" DOE requested approval of seven Type I waste tanks (Nos. 2 through 8) as having equivalent devices for secondary containment. DOE stated that it plans to add wastes to these tanks during emergencies only.

These seven Type I tanks are not known to have leaked. The Type I tanks have 5-feet deep steel containment pans and are enclosed in an uncoated concrete structure. This structure does not meet all of the criteria for a secondary containment vault.

EPA is concerned about this request because the "Phase II Assessment Report" does not provide sufficient information for Tanks 2 through 8 to evaluate the following matters:

- current quantities of wastes in the tanks,

- the schedule for removing the existing tank wastes,

- the potential for future cracking of these tanks if their waste levels are increased,

Printed on Recycled Paper

- the ability of the leak detection and removal systems to prevent overtopping of the containment pans, and

- what are the potential scenarios that would constitute an emergency to warrant the use of these tanks.

If DOE can provide sufficient information to address these points, it is our opinion that Tanks 2 through 8 could be used for emergency waste receipt and storage.

Another main concern about the assessment reports is that DOE states that its tank inspection procedures are not capable of observing 100% of the tank sidewalls. As a result, inactive leak sites that have not yet been detected may be present in some tanks. This is an issue because the waste removal process may activate any such leak sites and present a threat of release to the environment.

If you have any questions concerning this matter please contact Mr. Victor L. Weeks, Remedial Project Manager, of my staff at (404) 347-3016.

Sincerely yours,

Jon D. Johnston

Jon D. Johnston, Chief
Federal Facilities Branch
Waste Management Division

Enclosure

cc: Mr. L.C. Goidell, Savannah River Site
Mr. Ben Gould, Savannah River Site
Mr. J.W. Cook, Westinghouse Savannah River Company
Mr. C.R. Sherman, Westinghouse Savannah River Company
Mr. Harry Mathis, South Carolina Department of Health and Environmental Control
Mr. David Wilson, South Carolina Department of Health and Environmental Control
Mr. L.R. Bedenbaugh, South Carolina Department of Health and Environmental Control
Ms. Ann Ragan, South Carolina Department of Health and Environmental Control
Mr. Larry Arrington, South Carolina Department of Health and Environmental Control

TECHNICAL REVIEW/COMMENT REPORT

HIGH-LEVEL RADIOACTIVE WASTE TANK SYSTEMS
F AND H TANK FARMS

SAVANNAH RIVER SITE
AIKEN, SOUTH CAROLINA

GENERAL COMMENTS

This report contains a review of the "As-Built Construction Permit Application for an Industrial Wastewater Treatment Facility for the F and H Area High-Level Radioactive Waste Tank Farms" dated April 16, 1991 (hereinafter called the WWTF Permit Application), the "Assessment Report Phase I for the In-Tank Precipitation Treatment Facility, F and H Area High-Level Radioactive Waste Tank Farms" Revision 0, dated May 3, 1991 (hereinafter called the Phase I Assessment Report), and the "Assessment Report Phase II for the F and H Area High-Level Radioactive Waste Tank Farms" Revision 0, dated August 20, 1991 (hereinafter called the Phase II Assessment Report).

The above submittals were reviewed for conformance with Section IX and Appendix B of the Draft Federal Facility Agreement (FFA) for the Savannah River Site (SRS). The ensuing comments follow the organization of each of the above documents. Recurring comments have been provided at a single location, with references made to all affected sections of the associated document.

WWTF PERMIT APPLICATION

SECTION 4.2: NORMAL OPERATIONS

The application states that adding or removing equipment such as valve boxes, pipes and valves are part of the normal operations and are not considered modifications to the permit application. However, Section IX.B of the FFA requires such permit modifications and written integrity assessments and certifications for any components which are not identical replacement items, are installed after the permit application is approved, and require modification of secondary containment or impact the structural integrity of the tank system. Some of the types of equipment modifications listed above could alter the secondary containment or affect the tank system integrity. Revise the application to describe the anticipated modifications of this nature, or state that permit modifications, assessments and certifications will be provided for such components where required.

SECTION 4.7: WASTE TANKS

Page 127 of the application states that tank service and equipment "modifications are considered part of normal operations as discussed in Section 4.2." Revise these statements to be consistent with all revisions made in response to the comment above for Section 4.2.

Table 4-4 shows that several of the tanks containing wastes "Has one or more known cracks in primary tank shell." However, no mention is made regarding how these cracks were discovered, where they are located, or if they have resulted in any leaks. Section IX.A.2 of the FFA requires descriptions of past leaks and demonstrations that each tank system is not leaking. Section IX and Appendix B also require that leaking tanks be properly managed and/or taken out of service. Provide additional information about the cracks to prove that leaks have not occurred as a result of them, or that any resultant leaks have been properly managed in accordance with the FFA.

Subsection 4.8.1: Waste Transfer Lines

This section states that all transfer lines have secondary containment structures with leak detection probes at low points. In accordance with Paragraph C.1.(c) of Appendix B of the FFA, demonstrate that these probes will be able to detect any leak within 24 hours of occurrence. If this system is not capable of leak detection within 24 hours, describe the system modifications that will be implemented to meet this requirement, or demonstrate that existing technologies do not allow detection within 24 hours.

The concrete, trench-like encasements and cement-asbestos jackets used for secondary containment are known to allow groundwater infiltration in some areas (i.e., they leak). Discuss what plans are in place to repair these breaches of the secondary containment system. Also describe the types of coatings or interior liners used to prevent any releases from migrating into the concrete or cement of these structures. Further, discuss the condition of all joint fillers, caulking, gaskets, etc. used in these encasements and jackets, as well as their compatibility with the wastes managed.

The Type IV containment system (stainless steel pipe and jacket) is used to heat the transfer line by injecting steam into the annular space. Describe what precautionary measures exist to prevent a release through the steam system (e.g., through the boiler, condensate traps, relief valves, etc.) should a leak develop in the transfer pipe, especially when the steam system is depressurized or otherwise out of service.

Describe what measures are employed to ensure that any liquids resulting from leaks, infiltration or precipitation are removed from the secondary containment systems within 24 hours, as required by Paragraph C.1.(d) of Appendix B of the FFA.

Subsection 4.8.2: Diversion Boxes

Demonstrate that these structures provide liquid-tight secondary containment in accordance with Section C of Appendix B of the FFA. This appears especially important in light of the many pipe penetrations through the walls of these concrete structures. Also demonstrate that the "water proofing compounds" used in FDB1, HDB1 AND HDB3 are compatible with the wastes, and will not allow migration of the wastes into or through the concrete should a leak occur.

Demonstrate that all leaks into these structures will be detected and removed within 24 hours, in accordance with Section C of Appendix B of the FFA.

Subsection 4.8.3: Valve Boxes

The application does not discuss materials of construction or other details for these structures. Demonstrate that these structures provide liquid-tight secondary containment, and that all leaks into these structures will be detected and removed within 24 hours, as required by Section C of Appendix B of the FFA.

PHASE I ASSESSMENT REPORT

DOE has elected to demonstrate that the secondary containment systems for the ITP equipment meet the requirements of Appendix B, Section C of the FFA. These demonstrations can be provided

instead of structural integrity assessments for the tank systems. In this regard, the following comments must be addressed in order to demonstrate compliance with the secondary containment and release detection requirements.

SECTION 3.1: TANKS 48 AND 49

Subsection 3.1.2: Waste Compatibility

Describe the operating practices and management procedures that are used to ensure that the internal cooling systems and annulus vent systems are in proper working condition at all times. For example, describe the controls, alarms, monitoring, inspection and maintenance procedures that are employed for the various systems during normal operations and potential problem scenarios. Also discuss the equipment and procedures used to detect malfunctions in the cooling systems, as well as leaks in the tank systems where the cooling systems may be capable of detecting such problems.

Although the annulus vent systems have HEPA filters and condensate traps, demonstrate that they will not result in airborne releases from the secondary containment system if a large leak occurs from the primary tank shell.

Discuss the consequences, and any actions that need to be taken, if the annulus cooling system becomes inoperative due to a large leak (e.g., liquid fills the annulus vent duct slots and/or the bottom air flow slots).

The report discusses the importance of maintaining the chemistry of the waste and other parameters within certain bounds to prevent stress corrosion cracking (SCC) of the tank shells. However, the specific ranges or limits for pH, nitrite, nitrate, temperature, tank shell stress, etc. that are needed to prevent SCC have not been provided. Therefore, describe the concentrations of the various constituents that must be maintained in the tanks, including allowable temperatures and stresses. Provide details regarding the important interdependencies among the various parameters (i.e., as the level of each parameter changes, describe how the others are affected and/or how they must be modified to prevent further SCC).

Also discuss the specific procedures and equipment used to monitor each parameter and maintain the proper concentrations/levels of all parameters, from initial receipt of the waste in the tanks through its final removal.

Subsection 3.1.3: Foundation Support

Demonstrate that the containment system has adequate support against failure due to settlement or compression, especially when it (or the contained tank) is full of waste.

Subsection 3.1.4: Leak Detection/Inspections

Provide details about the "visual monitoring" that is mentioned in the first paragraph of this report section.

Describe how small leaks (i.e., those not large enough to activate the conductivity probes) will be detected and properly removed within 24 hours. If such leak detection and removal is not possible within 24 hours, describe the system modifications that will be implemented to meet this requirement, or demonstrate that existing technologies do not allow detection and removal within 24 hours.

Discuss the types and frequencies of any tests that are used to ensure that all leak detection probes are in proper working order.

State the maximum time required to remove wastes from the tank secondary containment system either by using the waste removal jet pump and/or by lowering the tank level. If this time is greater than 24 hours, describe the modifications that will be implemented to meet this time requirement, or demonstrate that such timely removal is not technologically feasible.

Subsection 3.1.5: Past Leaks

Provide justification for this statement, including consideration of small leaks on the tank bottoms that cannot be detected visually and may be evaporated by the annulus cooling system.

SECTION 3.2: ITP FILTRATE HOLD TANKS

Subsection 3.2.1: Design Information

Provide design details which show that the stainless steel liner is continuous and prevents leakage at all tank leg pedestals, pump pads, pipe penetrations through walls and floors, and other such susceptible locations.

Furnish information as to whether or not the gutter and sump are lined with stainless steel. If stainless steel is not provided, discuss how leaks will be prevented from migrating into or through the concrete and any gaps.

The text and Figure 3-7 indicate that the stainless steel liner is essentially in contact with the adjacent walls. However, Figure 3-8 shows a considerable distance between the liner and walls. Resolve this discrepancy.

The report states that the containment system height in the ITP hold tank area will be raised above the top of the existing stainless steel liner. Describe the methods that will be used to place the grout between the existing liner and walls. (For example, simply "pouring" the grout into a narrow space will generally not ensure complete or crack-free filling of that space.) Further, describe the measures that will be taken to ensure liquid-tight contact between the liner and grout, and the grout and walls, so that cracks or gaps which could allow leakage do not develop at these interfaces.

Provide further details to show that the "minimum vertical containment height of 16 inches along each wall of the hold tank area" is adequate to provide 12,000 gallons of containment, since the floor slopes 4-1/2 inches.

Explain the significance of the term "non-coated" when referring to the containment area in the stripper building.

The information in the report does not clearly show that a large leak, especially a rapid one, will pass through the 6 by 6 inch opening into the stripper building before it escapes through a door. Provide clarification.

The last sentence of the last paragraph of this section (on page 33) states "additional secondary containment is provided to a height (approximately 18 inches in the hold tank area)". However, previous discussions refer to an epoxy (i.e., containment) height of 16 inches. Clarify or resolve this discrepancy.

Subsection 3.2.2: Waste Compatibility

Provide vendor information to show that the epoxy coating is compatible with the anticipated ranges of constituents, pH, radiation levels and other characteristics of the waste to be contained.

Subsection 3.2.4: Leak Detection/Inspections

Due to the location of "high liquid level" probes in the sump, and the potentially long travel distance across the room to the sump, discuss how relatively small leaks will be detected within 24 hours. Also provide details about the sump pump to demonstrate that it can remove 12,000 gallons within 24 hours.

SECTION 3.3: ANCILLARY EQUIPMENT

Subsection 3.3.1.1: Design Information

Clarify if the sumps are lined with stainless steel and are continuously seal welded to all surrounding portions of the liner.

Describe how the containment liner is designed at the filter pedestals and any other raised equipment supports to prevent leakage behind this liner.

Provide details about the ventilation ducts to show that any pressurized leaks (i.e., sprays) from the filters or pipes will not be able to enter the ducts and escape the containment system.

Subsection 3.3.1.4: Leak Detection/Inspections

With the liquid level probes located in the sumps and set at a height of 5 inches, describe how small leaks will be detected and removed within 24 hours. If such leak detection and removal is not possible within 24 hours, describe the system modifications that will be implemented to meet this requirement, or demonstrate that existing technologies do not allow detection and removal within 24 hours.

Subsection 3.3.2.1: Design Information

Provide information which illustrates whether or not the square gravity drains through the walls are provided with stainless steel liners, and if they are continuously welded to the liners in the stripper area rooms.

Also show how the secondary containment liners are designed at the pump pedestals and any other raised equipment supports to prevent leakage behind the liners at these locations.

Describe how any leakage above the upper (i.e., second floor) stripper supports will be prevented from leaving the Stripper Room. Figure 3-13 shows a potential pathway from the Stripper Room to the Break Water Room at this level. Otherwise, describe the secondary containment system within the Break Water Room.

Subsection 3.3.2.2: Waste Compatibility

Discuss whether or not there is a potential for leaks in the stripper area to escape the secondary containment system via the ventilation system (as was the case for the ITP Filter Cells).

Subsection 3.3.2.4: Leak Detection/Inspections

Due to the location of "high liquid level" probes in the sump within the ITP Filtrate Hold Tank Room, and the long travel distance across two to three rooms to this sump, discuss how relatively small leaks from this equipment will be detected and removed within 24 hours.

PHASE II ASSESSMENT REPORT

Many of the waste tank systems, components and/or ancillary equipment are known to leak or do not have secondary containment which meets the requirements of the FFA. According to Paragraph IX.E.1 of the FFA, such units require plans and schedules to remove them from service or to provide adequate secondary containment. These plans and schedules were not contained in this report. Therefore, submit the appropriate plans and schedules.

Subsections 3.1.1, 3.1.2, 3.2.2 and 3.3.2: Design Information/Waste Compatibility

Describe the operating practices and management procedures that are used to ensure that the internal cooling systems and annulus vent systems are in proper working condition at all times. For example, describe the controls, alarms, monitoring, inspection and maintenance procedures that are employed for the various systems during normal operations and potential problem scenarios. Also discuss the equipment and procedures used to detect malfunctions in the cooling systems, as well as leaks in the tank systems where the cooling systems may be capable of detecting such problems.

Although the annulus vent systems have HEPA filters and condensate traps, demonstrate that they will not result in airborne releases from the secondary containment system if a large leak occurs from the primary tank shell.

Discuss the consequences, and any actions that need to be taken, if the annulus cooling system becomes inoperative due to a large leak (e.g., liquid fills the annulus vent duct slots and/or the bottom air flow slots).

Subsections 3.1.2, 3.2.2, 3.3.2, 3.4.2: Waste Compatibility; Subsections 4.1.2, 4.2.2, 4.4.2: Waste Characteristics; and Attachments B and C

The report discusses the importance of maintaining the chemistry of the waste and other parameters within certain bounds to prevent stress corrosion cracking (SCC) of the tank shells. However, the specific ranges or limits for pH, nitrite, nitrate, temperature, tank shell stress, etc. that are needed to prevent SCC have not been provided. Therefore, describe the concentrations of the various constituents that must be maintained in the tanks, including allowable temperatures and stresses. Provide details regarding the important interdependencies among the various parameters (i.e., as the level of each parameter change, describe how the others are affected and/or how they must be modified to prevent further SCC). Also discuss the specific procedures and equipment used to

monitor each parameter and maintain the proper concentrations/levels of all parameters, from initial receipt of the waste in the tanks through its final removal.

Subsections 3.1.3, 3.2.3, 3.3.3, 3.4.3, 3.5.3, 3.6.3, 4.1.1, 4.2.1, 4.4.1 and 4.5.1: Foundation Support

Demonstrate that the containment systems and/or tanks have adequate support against failure due to inadequate bearing capacity or excessive settlement or compression, especially when the units are full of waste.

Subsections 3.5.3 and 3.8.3: Foundation Support

Provide details to show that leakage will not occur at the anchor bolts used to fasten the stainless steel liners to the underlying concrete. In Section 3.5.3, stainless steel to stainless steel contact will typically not prevent leakage. Demonstrate the compatibility between any caulking-type material that is used for this purpose and the wastes managed.

Subsections 3.1.4, 3.2.4, 3.3.4, 3.5.4, 3.6.4, 3.7.1.4, 3.7.3.4, 3.7.4.4 and 3.8.4: Leak Detection/Inspections

Demonstrate that all leak detection systems for all tanks and ancillary equipment are capable of detecting any size leak (especially small ones) within 24 hours, and that the removal systems can also properly remove any leaks within 24 hours. Adequate removal (and possibly tank emptying) capabilities are especially important for tanks that do not have full secondary containment and pump the leaked materials from the annulus pans back into the leaking tanks. If leak detection and removal is not possible within 24 hours, describe the system modifications that will be implemented to meet this requirement, or demonstrate that existing technologies do not allow detection and removal within 24 hours.

Also discuss how the leak detection and removal systems are tested and maintained to ensure they are working properly at all times, and how frequently such tests and repairs are performed.

Subsections 3.1.5, 3.2.5, 3.4.5, 4.1.5, 4.2.5 and 4.4.5: Past Leaks

The report does not provide information regarding existing crack and leak site locations, the number of cracks or leak sites per tank, potential flow rates through the leak sites, or the current levels of liquid, semi-solid and solid waste layers in the tanks. It also does not evaluate the current stress levels at crack and leak sites, or evaluate the future performance of the tanks when they are filled and agitated during future waste removal operations. These aspects appear to be very important since the stress corrosion cracking (which has reportedly caused the cracks) is highly influenced by the presence of supernate and high stresses (both of which will be present during waste removal). Therefore, provide the information outlined above.

Discuss the potential for new crack initiation, and propagation of existing cracks, during future waste removal operations. Also describe the steps that will be taken to control leaks, stresses, crack propagation and initiation, etc. during waste removal.

Provide information regarding the expected leakage rates of the various tanks during waste removal operations (e.g., quantity, and will they "spray" onto unlined concrete if under high head). Also demonstrate that the containment and removal systems will be capable of preventing releases of these leaks to the environment (e.g., they have adequate pumping rates, available alternate storage capacity for removed leaks, free of cracks and gaps, etc.).

Subsections 3.7.1.1 and 3.7.3.1: Design Information

The concrete, trench-like encasements and cement-asbestos jackets used for secondary containment are known to allow groundwater infiltration in some areas (i.e., they leak). Discuss what plans are in place to repair these breaches of the secondary containment system. Also describe the types of coatings or interior liners used to prevent any releases from migrating into the concrete or cement of these structures. Further, discuss the condition of all joint fillers, caulking, gaskets, etc. used in these encasements and jackets, as well as their compatibility with the wastes managed.

Subsections 3.5.1, 3.7.1.3, 3.7.2.3, 3.7.3.3, 3.7.4.3 and 4.5.5: Foundation Support

The report states that no specific design standards were used for these pipes, that most of them are buried below grade, and that a minimum soil cover thickness has not been established for pipes at the site. Discuss the precautions that have been taken to prevent damage to these waste pipes or their secondary containment devices due to vehicle traffic and any other surface loads.

Subsections 3.7.1.6, 3.7.2.6, 3.7.3.6 and 3.7.4.6: Determination of Secondary Containment

Section 3.7.1.5 states that "As with many waste transfer lines, the secondary containment terminates at the outer surface of the concrete walls of the boxes, risers, or similar containment structures penetrated by primary lines." Therefore, it appears that many waste transfer lines do not have liquid-tight secondary containment. Describe the measures that will be implemented to identify and repair these deficiencies in the secondary containment systems for all transfer pipes.

SECTION 3.1: TYPE I WASTE TANKS

Subsection 3.1.1: Design Information

The text and Figure 3-1 do not clearly indicate that the leak pans are continuous under the Type I tanks. Provide additional information regarding the continuity of these pans.

Subsection 3.1.2: Waste Compatibility

For the Type I tanks that have leaked, discuss the presence of salt cake in the containment pan and on the tank sides, and any potential corrosion or cracking in accordance with the comment for Section 3.2.2 below.

Subsection 3.1.4: Leak Detection/Inspections

Clarify if the fill limit probes are always located 10 inches below the lower of the two possible fill levels (i.e., below the design fill limit or the lowest leak site, whichever is lower).

Subsection 3.1.6: Secondary Containment Determination

DOE has requested that Tanks 2 through 8, inclusively, be approved as having equivalent secondary containment devices. However, the assessment report does not include several important pieces of information, as outlined below.

Discuss what methods have been used to determine if cracks or gaps are present in the concrete structure surrounding the tank and containment pan. Also discuss the size and locations of any such cracks that have been found, and their potential for allowing waste migration through them.

Demonstrate that the seal between the top of the containment pan and the adjacent concrete wall will not provide a release pathway if the pan is overtopped. (Based on the information provided, this appears to have been a factor for Tank 16.)

Discuss the waste removal capabilities (i.e., pumping rates, availability of alternate waste storage space, etc.) in the event of a catastrophic failure of these tanks at all times during future operations.

SECTION 3.2: TYPE II WASTE TANKS

Subsection 3.2.1: Design Information

Detail A on Figure 3-2 is very unclear. Provide clarifications about the material types, locations and thicknesses of all materials used to construct the tank system's bases and sides.

Subsection 3.2.2: Waste Compatibility

This section states that dried salt cake is present in the containment pans. It also says that, "The inspection program has shown no visible adverse effects on the secondary containment pan" due to the dried salt cake. Discuss how the visual inspections can "see through" the salt cake and provide enough evidence to ensure that corrosion or cracking is not occurring as a result of the leaked waste. This includes the containment pan and outside of the waste tanks.

SECTION 3.3: TYPE III WASTE TANKS

Subsection 3.3.5: Past Leaks

Provide justification for this statement, including consideration of small leaks on the tank bottoms that cannot be detected visually and may be evaporated by the annulus cooling system.

SECTION 3.4: TYPE IV WASTE TANKS

Subsection 3.4.1: Design Information

Expanded vermiculite was used around the tank walls "to provide a cushion for thermal expansion of the tank due to heat generated by the waste." Discuss the potential for cracks to be generated in the concrete structural walls due to these thermal deflections, and any potential cracking or buckling of the steel tank walls that could occur because of the different thermal expansion properties of the steel and concrete.

The second paragraph on page 64 states that "Hydraulic forces are not of concern for these type tanks located in F-Area since the water table is typically lower than the tanks. Tanks 21-24 in the H-Area are also above the water table". However, the third paragraph on that page states that "For Type IV Waste Tanks, which do not have an annular space, hydraulic forces would be expected on the tank." Resolve this apparent discrepancy.

Discuss why ballast water is needed in these tanks if they are above the water table. If ballast water is indeed required in these tanks when they are out of service for extended periods, discuss why such water would not be needed if the tanks were to be empty for short periods of time.

Discuss how the tanks will be emptied during and after waste removal operations if ballast water is required to prevent floatation of them.

Subsection 3.4.4: Leak Detection/Inspections

Provide additional design details about the bottom leak collection system and detection sump to show that it functions as planned, and is not a release pathway for

leakage (i.e., does not have cracks or gaps that would allow migration). Also discuss how often it is monitored, and what tests are performed to detect leakage.

Provide details to show how "Two vertical pipes, 180 degrees apart, connect the sidewall leak detection channel to the bottom leak detection channel." Figure 3-5 shows the vertical pipes outside the area of the bottom channels.

Discuss how often the sidewall leak detection system is monitored, and what tests are performed to detect leakage. Also provide information about the levels to which "perched" groundwater is allowed to rise before it is removed, and how long this water is allowed to accumulate before it is removed.

Discuss how sidewall leaks are monitored for F-Area tanks.

Provide details about the waste level monitoring systems in these tanks, including type, frequency of readings and sensitivity to changes in the waste levels.

Subsection 3.4.5: Past Leaks

State whether any further investigation for cracks was performed, and if any cracks were found as a result, in Tank 20 after it was emptied. Discuss future uses for this tank. Since Tank 20 has no sidewall monitoring, discuss the potential that such leaks have gone undetected.

SECTION 3.5: EVAPORATORS

Subsection 3.5.1: Design Information

Provide details to show how the stainless steel liners for evaporators 242-F and 242-H are connected to the walls. The report does not indicate that this is done in such a way as to prevent leakage at this connection. Also provide this information for the hold tank cell liners for evaporators 242-16F and 242-16H.

Provide design details which show that the stainless steel liners for all evaporators are continuous and prevent leakage at all tank leg pedestals, sumps, pump

pads, pipe penetrations through walls and floors, and other such susceptible locations. Also provide this information for the hold tank cell liners for evaporators 242-16F and 242-16H.

Discuss the size of the gravity drain line from evaporator 242-H to Tank 13, and evaluate the capability/speed of this line to drain a large, rapid release to that tank (i.e., will it prevent overtopping of the 18 inch deep pan).

Provide details regarding the design of the concrete berms in all hold tank cells.

Page 75 and Figure 3-7 show that the condenser cells drain into the evaporator cells. Discuss whether or not these drain holes are lined to prevent migration of wastes into the concrete. Also provide information to illustrate how these drains and evaporator cell liners are designed to prevent leakage of wastes behind the liners.

The report states that "The transfer lines to and from the CRC for evaporators 242-F and H are not jacketed." Discuss how secondary containment will be provided for these pipes. Also discuss if there are any other waste transfer lines associated with the F and H Area Tank Farms that do not have secondary containment.

SECTION 3.6: PUMP PITS

Subsection 3.6.1: Design Information

Provide details of the secondary containment features for HPP1. Alternatively, state that it is permanently out of service and completely disconnected so that it cannot receive wastes in the future.

Demonstrate that the stainless steel liners for all pump pits are continuous and prevent leakage at all sumps, pipe penetrations and other such susceptible locations.

Subsection 3.6.5: Past Leaks

Describe the methods used to "discover" any leaks through the stainless steel liners.

SECTION 3.7: TRANSFER LINES

Subsection 3.7.1.1: Design Information

Demonstrate how it is known that "in leakage" occurs through joints in the concrete cover slabs only, and not through side or bottom joints or cracks, especially since more infiltration occurs in areas where the water table is "higher". If this cannot be demonstrated, describe the measures that will be implemented to repair the secondary containment.

Subsection 3.7.1.4: Leak Detection/Inspection

The report is rather sketchy about design and operational details, pumping rates, etc. for the catch tanks and their encasements. Provide sufficient details to demonstrate that these units perform as required and do not leak. Also discuss how the unlined concrete encasements, which receive all wastes before the catch tanks do, prevent migration of the wastes into or through the concrete and any cracks, gaps or joints in the encasements. Further, discuss the final disposition of any wastes collected in the catch tanks.

Subsection 3.7.1.5: Past Leaks

Clarify whether the secondary containment systems have been repaired at all interfaces between Type I pipe encasements and boxes and risers, or if this was done only at those which have leaked in the past. Provide details to demonstrate that liquid-tight seals have been created at these interfaces and penetrations.

Subsection 3.7.2.1: Design Information

This section states that "Infiltration of groundwater or precipitation into the Type II/IIA transfer lines does not normally occur." Discuss whether such infiltration has ever occurred, as well as how it was detected and repaired.

Subsection 3.7.2.4: Leak Detection/Inspections

Describe what type of "normal surveillance" or operator suspicion, other than finding liquids via the leak detection equipment, would prompt an operator to conduct an air leak test. Also discuss which sections of this type of pipe are "amenable to the test", and which are not.

Provide details to demonstrate that all joints between secondary containment jackets, drain pipes, LDBs, diversion boxes, pump pits, overflow drains, waste tanks, drain cells, final catchment, etc. are continuous and liquid-tight.

Subsection 3.7.2.5: Past Leaks

Discuss whether any of the first 3 leaks that are listed released outside of secondary containment.

For the third leak listed, describe what precautions are in place to prevent leakage from the condensate drain that was installed.

Subsection 3.7.3.1: Design Information

Demonstrate that all rubber ring seals, which are known to deteriorate in radiation fields, are still liquid-tight and will remain so throughout the remaining active lives of these pipes.

Subsection 3.7.3.2: Waste Compatibility

This section states that "The sodium hydroxide that is added to the wastes to inhibit nitrate induced SCC, also seems to facilitate compatibility with the cement-asbestos jacket." Explain how this occurs if the waste has never come into contact with the cement-asbestos (as indicated in Section 3.7.3.5 Past Leaks).

Subsection 3.7.3.5: Past Leaks

This section states that groundwater has infiltrated the containment jacket of one pipe. Discuss whether this pipe is still in service. If so, discuss what measures have been or will be taken to repair this leak.

SECTION 3.8 DIVERSION BOXES

Subsection 3.8.1: Design Information

Demonstrate that the unlined diversion boxes (FDB1, HDB1 and HDB3) will not allow migration of wastes into or through the concrete, as well as through any construction joints, gaps or cracks. Section 4.8.2 of the WWTF Permit Application indicates that these unlined DBs are coated with water proofing compounds, but no mention of such compounds is made here. Resolve this discrepancy.

Demonstrate that the lined structures provide liquid-tight secondary containment in accordance with Section C of Appendix B of the FFA. This appears especially important in light of the many pipe penetrations through the walls of these structures, and due to the comment made in Section 3.7.1.5 of the report regarding the discontinuity of secondary containment at pipe-to-box interfaces.

Provide design details about the drain line from FDB1 to the F-Area catch tank, including how the pipe is sealed to the DB and catch tank to prevent leakage at these joints.

Page 121 states that "Water stops seem to have been included in all of the construction joints." Provide details to support this conclusion.

Subsetion 3.8.5: Past Leaks

Sections 3.8.3 and 3.8.5 show that some of the stainless steel liners have buckled. Discuss what types of tests or inspections have been performed on the remaining DBs to ensure that they are not leaking.

Subsection 3.8.6: Secondary Containment Determination

Section 3.8.5 states that the unlined DBs (and apparently FDB2) allow "inleakage of groundwater or precipitation." That is, they leak. Provide additional evidence to support the conclusion that such DBs meet the requirements of secondary containment as outlined in the FFA.

SECTION 4.4: TYPE IV WASTE TANKS

Subsection 4.4.2: Waste Characteristics

Demonstrate that all leak sites will be identified for these tanks before using them to receive low level radioactive process wastewaters, and that the tanks will not be filled above their lowest leak sites.

Subsection 4.4.5: Integrity Examination

This section states that "Five of the eight tanks are essentially empty (except for ballast water)", while Attachment A shows them all to contain LHW, salt cake or sludge. Resolve this discrepancy.

Discuss the potential for not yet discovered leaks below the waste levels in these tanks, and their impacts during waste removal operations.

SECTION 4.5: EVAPORATORS

Subsection 4.5.5: Integrity Examination

Provide details regarding the design of the manholes in the gravity drain line from evaporator 242-H to the F/H ETF process sewer. This should include details about the connection of pipes to the manholes to ensure liquid-tight seals. Provide similar information for all other manholes in any transfer lines and IALs.

SECTION 4.6: PUMP PITS

Refer to comments for Section 3.6 regarding pump pits.

SECTION 4.7: WASTE PIPING

Refer to comments for Section 3.7 regarding transfer lines.

SECTION 4.8: DIVERSION BOXES

Refer to comments for Section 3.8 regarding diversion boxes.

W-0517

Date 6-22-92

Number of Pages Including Cover Sheet

Fax Message

Please Deliver This Fax Message

To:

From:

SUBJECT/COMMENTS:

DRAFT

Phase I Comments

1. Section 3.1.2, The Assessment Report should discuss the history of cooling system (cooling coils and annulus ventilation) failures for tanks 48 and 49 and the consequences of a failure of either system.

2. Section 3.1.2, There should be more detail provide on the monitoring of the nitrogen blanket in the tanks where the potential for the formation of explosive gases exist, specifically how the blanket integrity is monitored and maintained.

3. Section 3.1.3, A demonstration should be provided which shows that the tank system is placed on a foundation capable of providing support to the system, resistant to pressure gradients above and below the system, and capable to preventing failure due to settlement, compression, or uplift. A discussion as to why the this tank system base appears less substantial than the one constructed for the smaller hold tank system (section 3.2.3) should be included.

4. Section 3.1.4, Include a discussion as to how a leak in the secondary containment structure would be detected. Also discuss in detail the visual monitoring of the annular space. Since this is the only means of detecting small leaks (those not reaching the floor of the annular space), discuss how visual monitoring allows for detection and removal of small leaks within 24 hours as required by the FFA. Describe the tests used to ensure that the leak detection probes are functioning properly.

5. Section 3.1.5, It is stated that no leaks have been detected in any of the Area 11A tanks. Does this include small leaks that may not have reached the conductivity probes within the annular space or leaks so small that they may not be detectible by measuring the tank content level.

6. Section 3.2.1 and Figure 3-4 and 3-6, provide more detail of the ITP Hold Tank Area including the sump and gutter liner material. Provide details which show that the liner is continuous throughout the ITP Hold Tank Area and prevents leakage at all penetrations of the liner and all support connections to the liner. Include the elevation of the entry ways into this room and composition of the 6" drain line. Discuss the QA/QC procedures that will be followed during the installation of the liner extension and/or include a copy with the annual tank assessment report. Address the composition of the 6" square gravity drain which connects the hold tank containment area with the stripper building containment zone and discuss how it is attachment to the liners.

7. Section 3.2.2, Provide more detail on the monitoring of the nitrogen blanket in the hold tanks, specifically how the blanket integrity is monitored and maintained.

8. Section 3.2.4, Discuss the availability of daily visual inspections of the hold tanks which would detect small leaks and/or the ability of the liquid level probes in the hold tank area sump to detect small leaks within 24 hours.

DRAFT

9. Section 3.3.1.1, Is the cross flow filter containment area covered? If not, discuss whether the cross flow filters will operate at a pressure sufficient to spray liquid out of the containment area if a leak occurred in an area on top of the filters. Discuss whether spray entering the ventilation duct could escape the containment system.

10. Section 3.3.1.4, Discuss how a small leak would be detected within 24 hours with the liquid level probes in the sump set at a height of 5 inches.

11. Section 3.3.2.1, Address the composition of the 6" square gravity drain which connects the stripper room with the pump room and it's attachment to the liners.

12. Section 3.3.2.1 and Figure 3-13, Discuss how the equipment supports are connected to the stainless steel liner so as to prevent leakage past the liner. The method of connection is of particular interest in the case of the pump pads which appear, reference fig. 3-13, to be mounted to the base slab. Also, are the upper supports, shown at elevation 26'-6 5/8' and 40' in fig 3-13, enclosed rooms, are they open to the Break Water Tank Room, and how is secondary containment provided at these levels. There appears to be potential for leaking wastewater in the two upper levels to reach the Break Water Tank Room, therefore, detail of the Break Water Tank Room's ability to provided secondary containment should be provided.

13. Section 3.3.2.4, Discuss how small leaks would be detected within 24 hours in the filtrate hold tank area sump when the leaked volume would have to exceed the containment volume of both the stripper room and the pump room prior to reporting to the filtrate hold tank area sump. Also, discuss the operating pressure of the stripper columns and the possibility of spraying liquid into the ventilation system or other areas which may allow liquid to escape the secondary containment system.

DRAFT

Phase II Comments

1. Page xi, All Type II tanks have developed leaks including Tank 13, an evaporator feed tank. With the mobility offered by the junction boxes, discuss why it should take until 1995 to select and put into service an unleaking tank to serve as the evaporator feed tank. Comment number 1 also applies to these tanks, especially Tank 13 which will be under considerable use with predominantly liquid contents.

2. Page xv, Provide additional detail on the closure of the hole in the 242-16H evaporator hold tank cell.

3. Page xvii, Diversion boxes HDB1 and HDB3 are stated as not being lined with stainless steel. Discuss liner composition and suitability in containing leaked waste.

4. Figure 3-1 shows what appears to be the carbon steel pan beginning at in the grout under the air supply duct and extending five feet up the side of the tank. Is the steel pan continuous under the tank. If not, discuss how migration of waste at the pan-grout junction is avoided.

5. Sections 3.1.1, 3.2.2, and 3.3.2, Discuss the capacity of the annulus ventilation system and the consequences of a leak exceeding the capacity of this system. Could the results be an airborne release. Also, since some type I tanks and all Type II tanks have waste accumulation in the annular space, discuss the consequences of an inoperative annulus cooling system, or restriction of air, resulting from an accumulation of waste over the air supply duct

6. Section 3.1.5, It is stated that there are five type I tanks (1F, 9H, 10H, 11H, 12H) that have leaked and will leak again once the tank contents is liquified. Also, tanks 9H-12H have rainwater infiltration into the annular space indicating a breach of the required secondary containment. Discuss how, under these conditions, these tanks meet the requirements of the FFA specifically section IX.A.2, a demonstration that each tank system is not leaking. Also, discuss monitoring of soil immediately surrounding the tanks.

7. Section 3.2.2, Discuss how a visual inspection was performed under the dried salt cake.

8. Section 3.2.5, Discuss how tank contents are maintained below the level where cracks are located when it is stated in Appendix D that the inspection process is not able to observe all of the tank sidewalls. Discuss the possibility that additional leaks exist, below those currently documented, which could become active when waste removal begins and create capacity as well as operating problems. If 100% of the sidewall of some of the tanks can not be observed, discuss how it is know where to maintain the tank contents. Discuss how the known leaks and cracks were discovered. Have any studies been done on the feasibility of repairing leaks or cracks in primary tanks. If so, discuss the results. Also, discuss monitoring of soil immediately surrounding the tanks.

DRAFT

9. Section 3.3.1 and section 3.3.5, If the Type III and IIIA Waste tanks have no documented leaks and have no evidence of either ground water or precipitation entering the annular space, discuss the source of the small amounts of liquid that is removed by the annulus ventilation system. The presence of any foreign substance, liquid, solid, and/or gas (excluding air) within the annular space of the tank constitutes a leaking tank. Discuss how the leaking waste is detected and removed within 24 hours. Also, discuss monitoring of soil immediately surrounding the tanks.

10. Section 3.3.2, Discuss the consequences of a catastrophic failure of the cooling systems and the safeguards that are present to prevent such an occurrence.

11. Section 3.4.1, If thermal expansion of Type IV tanks is great enough to warrant vermiculite as a cushion, discuss any problems associated with the different thermal expansions of a steel tank incased in a concrete core wall. In the last paragraph, it is stated that ballast water is kept in the Type IV tanks if the tanks are expected to be empty for an extended period of time. Discuss how these tanks can be emptied of waste, waste below 60 inches, given the potential hydraulic concerns expressed in this paragraph. Also, discuss the contents of the next to last paragraph in this section which seems contradictory in that it states that hydraulic forces are not of concern for Type IV tanks.

12. Section 3.4.4, Is the only means of leak detection in Type IV tanks by visually inspecting the leak detection sumps? Discuss the availability of other types of leak detection, size of the leak detection sump, how the circumferential drainage channel collects and transports water to the bottom leak detection channel. With the channel open-topped, discuss the possibility this offers a direct route for rainwater to enter the sump and flush any leakage before it could be discovery. If the only means of leak detection is by visually inspecting the sumps, how often is the inspection done, does it meet the 24 hour requirement for wastewater detection and removal, and how would a leak be determined given all other sources of inflow to the sump. How are sidewall leaks monitored for in Tanks 17-20? A discussion of these issues should be included in the assessment report. Also, a discussion of soil monitoring immediately surrounding the tanks should be included.

13. Section 3.4.5, discuss how the crack was discovered in Tank 20, was an inspection for additional cracks done after the tank was emptied, and the current status and plans for this tank.

14. Section 3.5.1, discuss how a condenser leak is directed back to the evaporator cell. Figure 3-7 shows a drain line from the condenser cell entering the evaporator cell above the level of the 242F and H secondary liner possibly facilitating leakage behind the liner. Also, discuss the drain holes, specifically material of construction and how it is connected to each cell.

15. Section 3.5.6, discuss the drain line from the 242-H evaporator cell sump including its size, composition, ability to remove waste at a rate sufficient to prevent overtopping of the 18 inch deep secondary containment pan during a catastrophic failure of the evaporator.

DRAFT

16. Section 3.6.1, discuss how and why pump pit HPP1 was removed from service, the potential for leaks to occur at this pump pit from pipes leading to the pit that apparently were not removed, and how long HPP1 will be out of service and the degree of closure if it is removed from service permanently.

17. Section 3.6.5, discuss the leak detection system under the stainless steel liner.

18. Section 3.7.1.1, discuss how leakage was determined to be from joints between the concrete cover slab as apposed to cracks or other entrance ways.

19. Section 3.7.1.4, discuss the time required to determine whether a leak is actually occurring, which line is leaking, and how the catch tank would be kept from overflowing while this determination was being made. If the waste is removed while the determination is going on, to where and at what rate will it be transferred. Provide more detail on the catch tank encasement including liner, operational detail, etc... Also, discuss why liquid enters the encasement then is transferred to the catch tank rather then directly entering the primary tank and how the unlined concrete encasement prevents migration of the wastes into or through the concrete and any cracks, joints, etc... Type I transfer line experience infiltration from groundwater, if infiltration can occur then it appears that leakage from the primary line could likewise reach outside the secondary containment. Is there any plans to alleviate this problem. Also on the same page, it is stated that several lines drain to each catch tank, making determination of the specific line which may be leaking not immediately available. Can notification and removal of any leakage be accomplished within 24 hours as required by the IFA.

20. Section 3.7.2.2, Discuss when and how groundwater or precipitation infiltrated the Type II/IIA transfer lines and what measures were taken to eliminate such infiltration.

21. Section 3.7.2.5, Discuss whether all documented leaks released outside of the secondary containment and whether the detection and removal of accumulated liquids was within the 24-hour time frame. Also, discuss why the forth leak is so difficult to locate, current investigative measures, and why this occurrence will not be duplicated.

22. Section 3.7.3.1 and 3.7.3.5, Discuss whether the rubber ring seals which are known to degrade in radiation fields are the source of groundwater or precipitation infiltration, whether they would also allow a release or a primary pipe leak now or through the remaining active lives of these pipes, or whether this breach in secondary containment has been repaired.

23. Section 3.8.1, Demonstrate that the water proofing for the unlined diversion boxes (FDB1, HDB1, and HDB3) is sufficient to contain any leakage. Also, discuss the conclusion that "water stops seem to have been included in all of the construction joints." Provide detail of the gravity drain from FDB1 to the F-Area catch tank encasement.

24. Section 3.8.5, Discuss whether any periodic inspection are performed on the diversion boxes which would locate problems prior to exposing surrounding

DRAFT

soil or groundwater to contamination.

25. Section 4.1.3, Discuss the ability of the tank ventilation equipment to prevent the release of radionuclides to the environment during a major or continuous leak.

26. Section 4.1.5, The assessment states that the type I tanks are leaking and the plan is to accept them as leaking and simply pump out the secondary pan, essentially using the secondary containment as an extension of the primary tank volume. Discuss why this wouldn't eliminate the ability to consider the tanks as having secondary containment. Discuss how notification would be provide of a release to the surrounding soils, an occurrence known to have occurred with tank 16. With this operating procedure, discuss how a leak or failure in the secondary containment would be detected. Discuss how the operating procedure and leak detection in and outside the secondary containment meet the requirements of section IX and appendix B of the FFA in ensuring that a release to the environment would not occur.

27. Section 4.4.5, Plans and schedules should be submitted for the five Type IV tanks which are to be decommissioned and removed from service. These tanks are said to contain ballast water (tow, salt cake or sludge), discuss how the contents of the tanks will be managed.

28. Discuss any contingency plans or emergency procedures that are in place or will be in place during tank farm operation.

GENERAL COMMENTS

DRAFT

1. Some Type I tanks (1H, 9H, 10H, 11H, and 12H) and all Type II tanks have developed leaks which may become active if they receive fresh waste or when the salt cake and sludge is liquified prior to transfer. It would seem that given the number of leaks, inadequacy of the secondary containment, age and general deterioration of these tanks, the waste should be removed from these tanks as soon as possible, especially those tanks with documented leaks, and the tanks removed from service, per IX.E.1 of the FFA, if the leak(s) cannot be repaired. If the tank(s) can be and are repaired, the repair work should be certified by an independent PE. If closure is the option, Plans and schedules should be submitted for the closure.

2. We should require that any tanks removed from service be closed under RCRA. It appears that long term monitoring, tank specific, of these tanks and its surrounding environment will be necessary and some form of post closure corrective action plan should be in place in case a release occurred.

3. The length of service expected for the tanks is dictated by the capacity of disposal facilities (e.g. DWPF, SMDF, ETF, etc...). A limit on the allowed service life should be imposed in case a major problem arises with one or more disposal facilities which could prolong the use of a tank beyond a reasonably safe time

4. Page 44 of application, states that the addition of new or replacement systems are normal operation, not requiring dept approval? This may be ok if all the systems are within the F and H Area tank farms and the addition or replacement is an identical item. If the addition or replacement is not identical and/or has the potential to affect the integrity of the tank system, a certified permit modification and assessment report should be submitted (per the FFA). A special condition should be included which states that the construction permit does not consider or approve construction, replacement, or new components, including those related to the tank farm process, outside the F and H Area Tank Farm as normal operation and covered under the permit.

5. If Type I tanks (only tanks 2-8 since they have no known leaks) are approved for use, a construction permit condition is needed that states that the approved tanks should be used for emergencies only (emergency would have to be defined) and not for normal receipt and storage of waste

6. The integrity examination for the 242-H evaporator did not include a leak test (it was not operating). A special condition is needed which states that the leak test shall be performed and the results documented as part of the startup procedure or included with the annual tank assessment report.

7. Specifics of the FFA, when finalized, should be included as special conditions of the construction permit.

W-0517

BECHTEL SAVANNAH RIVER, INC.

INTER-OFFICE MEMORANDUM

CESD-92-0398

ENGINEERING & PROJECTS DIVISION
CONSTRUCTION

June 17, 1992

TO: M. A. HUNTER
REGULATORY COMPLIANCE ENGINEER
703-H

FROM: R. D. KOWALSKI
LEAD SITE CONSTRUCTION DISCIPLINE
ENGINEER - CIVIL
MDC 112

PROFESSIONAL ENGINEER COVERAGE FOR THE F/H TANK FARM (U)

Ref: M. A. Hunter IOM to R. D. Kowalski dated June 1, 1992 (WER-WME-920757)

This letter is in response to the referenced letter which requested my involvement in providing a professional engineering certification of the tank system integrity on an as needed basis when a major leak of the tank system is repaired as specified per section D.5(d) of the draft Federal Facility Agreement (FFA).

Professional engineering certifications currently provided by me or personnel within my group are limited to water and wastewater permitted E & PD Construction Department activities as defined by procedure CMP 03-1.13. These certifications solely provide an added assurance to the state regulators that a specific SCDHEC permitted construction activity is complete and is in accordance with the approved plans and specifications as submitted to the state. These certifications do not warrant the lifetime integrity of the system being certified as this is not included in a construction engineers scope of responsibility and should more appropriately be provided by a design engineer.

Based on the above, I will have to decline acceptance of the responsibility for certification of tank farm repairs as currently delineated in the draft FFA. Should you decide to revise the wording of the FFA to indicate that a certification will be provided to define that construction is complete and in accordance with the approved design, I will gladly provide certifications of construction department activities subject to availability of funding and adherence to the requirements of CMP 03-1.13.

Should you have any questions regarding this response, you may contact me at 7-7692.

ACTION REQUIRED: NONE
WRITTEN RESPONSE REQUESTED: NONE
DATE DUE: N/A

RDK:pfb

cc: T. B. Caldwell, 241-102F
J. Carroll, MDC 112
S. S. Cathy, 703-H
M. A. Ceravolo, 703-H
V. G. Dickert, 703-F
T. P. Gaughan, 241-120H
R. W. Harral, 703-H
C. R. Hayes, 703-18A
W. F. Hindle, MDC 112
R. K. Larsen, 703-H
B. L. Lewis, 703-H
M. W. Lewis, 703-H
J. A. Pike, 703-H
R. M. Satterfield, 773-70A
W. B. Van Pelt, 241-120H
K. S. Wierzbicki, 703-H
R. W. Wilson, 703-H
G. T. Wright, 703-H
P. G. Zionkowski, MDC 112

CES File: 2329

W-0517

INTER-OFFICE MEMORANDUM
Savannah River Site

Date: 16-Jun-1992 11:35am EDT
From: MONTE HAWKINS
HAWKINS-M-O6779 AT A1 AT SLSRP1
Dept:
Tel No: 51818

TO: See Below

Subject: RE: Simulant Runs at ITP

TIM,

As I understand the situation described above you are preparing a simulated feed for testing of the ITP facility. For several reasons it may be necessary to conduct this testing program in two phases. The simulant used in Phase 1 testing will be saved (stored in a tank truck) for use in Phase 2. To use the material to complete Phase 2 testing it will be necessary to add additional benzene to the Phase 1 simulant. At the end of Phase 1 the concentration of benzene in the simulant may be high enough to make the simulant hazardous if it were waste.

Bruce and I have discussed this situation and reached the following conclusion. Since you are using a simulant as opposed to an actual waste for testing and, since you are not discarding and have no intention of discarding the simulant at the end of Phase 1 the material is not a solid waste at that point. Since the simulant is not a solid waste at the end of Phase 1 it is not a hazardous waste and storage of the simulant in the tank truck will not be regulated as hazardous waste.

Chuck Hayes and Danny Dunaway are looking at this from a wastewater permitting point of view and will respond separately.

Distribution:

TO:	TIMOTHY P. GAUGHAN	(GAUGHAN-TP-O8815 AT A1 AT SASRS2)
CC:	Charles R. Hayes	(HAYES-CR-Z9722 @A1@SLSRP1)
CC:	W. DANNY DUNAWAY	(DUNAWAY-WD-O7436 @A1@SLSRP1)
CC:	BRUCE LAWRENCE	(LAWRENCE-BM-O4037 @A1@SLSRP1)
CC:	MONTE HAWKINS	(HAWKINS-M-O6779 @A1@SLSRP1)
CC:	CARY B. STEVENS	(STEVENS-CB-O5981 AT A1 AT SASRS2)
CC:	Barbara J. Clark	(CLARK-BJ-L2439 AT A1 AT SASRS2)
CC:	M.T. Keefer	(KEEFER-MT-O7775 AT A1 AT SASRS2)
C:	Bill Van Pelt	(VANPELT-WB-O7016 AT A1 AT SASRS2)

First

WSRC-EPD

PERMITTING FIELD SUPPORT GROUP

REVIEW COMMENTS

C R Hayes

(REV. 1, 3/23/92)

DISTRIBUTION:
C. R. Hayes, 703-18A
Permit File #W-0517
W. D. Dunaway, 703-18A
F. G. McNatt, Sr., 704-8H
K. S. Wierzbicki, 703-H

REVIEWED BY	FIELD CONTACT	DATE	PAGE 1 OF 1
C. R. Hayes, 703-18A, X5-8838	M. A. Hunter	6/15/92	

FIELD CONTACT DEPT	PROJECT NAME	PROJECT NO.	FILE NO.
WM	F/H HLWTF Annual Tank Inspection Report	N/A	W-0517

SUBJECT REVIEWED

- [ ] PERMIT APPLICATION PACKAGE
- [ ] CALCULATIONS
- [ ] FDC
- [ ] PROPOSAL/ REQUEST
- [ ] DRAWINGS

REVIEW COMMENTS

General - Editorial comments are noted throughout the report in red (attached).

Inspection Methods - It is stated that "only the direct photography systems will be described since the other systems are used less frequently and are basically familiar systems."

Does this include wide-angle photography? If so, this needs to be stated. Also, the appendices refer to WAP, DP, and PSP!

Who are the systems familiar to? They probably are not familiar to SCDHEC.

Other than these comments the document appears satisfactory for submittal.

Pages to be numbered by ISS

INTRODUCTION

Aqueous radioactive wastes from Savannah River Site (SRS) separations processes are contained in large underground carbon steel tanks. Inspections to evaluate these vessels made during 1991 and evaluations based on data accrued by inspections made since the tanks were constructed are the subject of this report

SUMMARY

The 1991 inspection program revealed the condition of the Savannah River Site waste tanks was basically the same as reported in previous annual Tank Inspection Program reports. No additional leaksites were found. No indications of leakage from existing leaksites was observed. No evidence of corrosion of the waste tanks or ancillary equipment was observed.

In 1991 a total of 5433 photographs and 99 visual and video inspections were made.

INSPECTION PROGRAM

Background

Alkaline aqueous radioactive wastes produced at the Savannah River Site are stored in underground tanks. The waste comes primarily from nuclear fuel reprocessing operations in the separations areas (F and H) and contains most of the radioactive fission products from SRS operations. The waste in the tanks is present in three phases: sludge, supernate, and salt formed by supernate evaporation. The supernate consists primarily of $NaNO^3/NaNO^2$ and has a fission product content up to 20 Ci per gallon. The sludge consists primarily of MnO^2 and $Fe(OH)^2$ with a fission product content up to 500 Ci per gallon.

Waste tank leak detection capabilities are essential to meet the primary objective of the SRS radioactive waste management program: to manage the

waste in such a manner as to minimize the radiation exposure and associated risk to man and his environment over the lifetime of the radionuclides.

The detection of leaked waste is based on two principles: disappearance of material from its proper location and appearance of material in an improper location. At SRS, primary reliance is on the second principle because the quantity of the waste detectable in an improper location is much less than that detectable by inventory change in a large tank. Capacity of SRS tanks is 0.75 to 1.3 million gallons. Although rigorous tank inventory surveillance is practiced, primary leak detection methods rely on automatic surveillance of those areas into which the leaked waste is most likely to migrate.

The annulus of each double-wall tank is equipped with at least two single-point conductivity probes for leak detection. These probes are located at the bottom of the annulus and on opposite sides of the tank. The single-wall tanks are built on slabs with a network of leak collection channels which drain to a common sump. Continuous sump level monitoring and frequent sump liquid sampling provide the leak detection. Besides the automatic surveillance, routine direct visual surveys are made in the annular spaces and nonroutine direct visual surveys are made in primary tanks by direct observation through opened access risers and/or inspection holes in the roof.

In 1961-62, following leakage of waste into the annulus of tanks 9, 10, 14 and 16, the first remote imaging inspections were made in the annuli of some of the waste tanks using a periscope. Random inspections continued through 1970. Since that beginning, a program was initiated in November 1971 to periodically inspect all waste tanks using remote visual imagery techniques to monitor for corrosion, waste leakage, anomalies of any type, and to investigate process or equipment concerns.

Steel thickness measurements have been made periodically of waste tanks using ultrasonic techniques to monitor for general corrosion. An analog-type instrument was used in 1967 and 1969 to measure the thickness of the primary wall of selected double-wall tanks. In 1972 a more precise instrument was put in service. About 20,000 measurements were made over a period of 14 years (1972 through 1985) indicated that no thinning of SRS tanks has

occurred. The only tank at SRS that has experienced detectable corrosion is tank 23, a tank with a unique service history. The upper wall interior surfaces show general corrosion with mild pitting. The pitting is broad but shallow. This tank is used to receive contaminated water from 244H, the Receiving Basin for Off-Site Fuels, and 245H, the Resin Regeneration Facility.

Inspections are complicated by factors such as radiation and contamination, remote operation as far as 40 feet below grade, and insertion of equipment through small (generally 5 to 8-inch-diameter) access openings. Inspection techniques that circumvent these difficulties have been developed; they yield good quality photographic records and thickness measurements. The techniques include periscopic systems, direct photographic systems, closed circuit television systems, and a system to measure waste tank wall and bottom plate thicknesses.

Waste tank inspection has been important in leak detection. The leaks in eight of the ten tanks that have been detected by direct visual inspection or by one of the remote inspection techniques. Since the inspection program was initiated in 1971, five tanks were found to have leaksites that were not recognized before inspection. The annulus conductivity probes were not activated by these leaks because of the small amount of leakage. The leaked waste evaporated to dryness sealing the crack before enough waste leaked to reach a conductivity probe.

The waste tank inspection program is divided into three phases: (1) visual and photographic inspection, (2) steel thickness measurements, and (3) metallurgical evaluation. This report describes the methods and results of the first two.

Tank Description

SRS has subsurface storage tanks of four different designs. The tanks are all constructed of carbon steel and reinforced concrete. They serve as storage and containment vessels for radioactive wastes. Appendix A gives location, design type, project number and construction period for each tank. A brief description of the different tank designs is given in the following paragraphs.

Type I Tanks

The 12 original storage tanks constructed between 1951 and 1953 are designated type I tanks. Tanks 1 through 8 are in F Area and Tanks 9 through 12 are in H Area. Each primary tanks has a capacity of 750,000 gallons, is 75 feet in diameter, and is 24 1/2 feet high. Figure 1 shows the essential features of type I tanks, including the primary tank, the secondary pan, and the concrete support structure.

The primary container is a closed cylindrical tank with flat top and bottom constructed from 1/2-inch-thick steel plate. The top and bottom are joined to the cylindrical sidewall by curved knuckle plates. The primary tank is set in a circular pan of 1/2-inch-thick steel plate, 5 feet deep and 5 feet larger in diameter than the tank, Thus forming an annular space 2 1/2 feet wide. The tank and pan are set on a 30-inch-thick base slab and are enclosed by a cylindrical 22-inch-thick reinforced concrete wall and a flat concrete roof that is also 22 inches thick. There are twelve 2-foot-diameter concrete columns within the primary tank to support the roof. Each column has a flared capital and is encased in 1/2-inch-thick steel plate.

A 9-foot layer of earth was placed over the tanks for radiation shielding. Cooling for each type I tank is provided by 36 parallel (water pipe) cooling coils.

A dehumidification duct in the annulus of each tank is routed from the tank top to the bottom of the annulus where it encircles the tank. The duct has distribution outlets and its cross-sectional area decreases as the distance from

the air supply increases. Access to the tank interior is provided at eight locations, and to the annular space at four locations, through riser pipes. Each of the 12 riser pipes is capped at the top with a concrete plug. Each plug is provided with two 5-inch-diameter ports equipped with removable plugs. Some these ports provide access for inspection.

All welds in the pan and primary tank were radiographically inspected, defects were corrected, and the welds were rechecked radiographically. The welds in the flat bottoms of both the pan and the tank were vacuum-tested for leaks. Additionally, both vessels were hydrostatically tested. The water was maintained at full height in the tank for 24 hours before inspection for leaks was made. Cooling water piping was hydrostatically tested at 300 psig and then leak-tested with 100 psig air pressure in the piping.

Type II Tanks

Tanks 13 through 16, constructed in H Area in 1955 and 1956, are designated type II tanks. Figure 2 is a cross section of this type. Each primary tank has a capacity of 1,030,000 gallons, is 85 feet in diameter, and is 27 feet high.

The primary container for type II tanks consists of two concentric steel cylinders assembled with a flat bottom and a flat top into a form somewhat like a doughnut. The top and bottom are joined to the outer cylinder by rings of curved knuckle plates. The inner cylinder is flared at the top to accommodate the roof support column. This cylinder is joined to the flat steel top with a continuous butt weld and to a base fastened to the bottom with a continuous T-weld. Steel thicknesses are:

Plate	Thickness, inch
Top and bottom	1/2
Upper knuckle	9/16
Wall	5/8
Lower knuckle	7/8

The primary tank is set on a 1-inch sand bed within a circular pan of 1/2-inch thick steel plate, 5 feet deep and 5 feet larger in diameter than the tank, Thus

forming an annular space 2 1/2 feet wide. The tank and pan assembly is surrounded by a cylindrical reinforced concrete enclosure with a 33-inch-thick wall and a flat concrete roof that is 45 inches thick. The tank and pan assembly and the surrounding wall are set on a foundation slab that is 42 inches thick. The roof is supported by the wall and by a central concrete column that fits within the inner cylinder of the vessel. The 45-inch-thick concrete roof provides radiation shielding; hence, no earth overburden is required. Cooling for each type II tank is provided by 44 parallel (water pipe) cooling coils. Access to the tank interior is provided at eight locations, and to the annular space at four locations, through riser pipes. Each of the 12 riser pipes is capped at the top with a concrete plug. Each plug is provided with two 5-inch-diameter ports equipped with removable plugs which provide access for inspection. In addition to the four annulus risers, other access openings (10 to 14 additional openings per tank) have been drilled into the annulus of each of these tanks to permit inspection of practically all of the exterior wall of the primary vessels.

All welds in the primary tanks were radiographically inspected, defects were corrected, and the welds were rechecked radiographically. The pans were not inspected radiographically. The welds in the flat bottoms of the pans and the primary tanks were vacuum-tested for leaks, and the primary and secondary vessels were hydrostatically tested. Cooling water piping was hydrostatically tested at 300 psi and then leak-tested, with 100 psi air pressure in the piping.

Type IV Tanks

Tanks 17 through 24 are single-wall uncooled tanks. These tanks were designed for storage of waste that does not require auxiliary cooling. Tanks 17 through 20 were constructed in F Area in 1958 and tanks 21 through 24 were constructed in H Area between 1959 and 1961. Each tank has a capacity of 1,300,000 gallons, is 85 feet in diameter, and is 34 feet high (Figure 3).

Each type IV tank is basically a steel-lined, prestressed-concrete tank in the form of a vertical cylinder with a domed roof. Carbon steel plates, 3/8 inch

thick, were used to form the cylindrical sides and flat bottom portion of the steel liners. The knuckle plates at the junction of the bottom and the sidewall are 7/16 inch thick. Concrete was built up around the steel vessel by the "shotcrete" technique.

Radiation shielding of the type IV tanks in F Area was accomplished by applying at least 32 inches of earth over each of the 7-inch-thick concrete domes. H Area tanks were shielded similarly, except that the earth cover was at least 44 inches thick to accommodate a somewhat higher radiation level from the waste.

Access to the interior of the tank is provided at six locations through riser pipes. Each riser pipe is capped at the top with a concrete plug. Some of these risers provide access for inspection.

All welds in the steel liners were x-rayed. All of the welded tank-bottom seams and the upper seams of the knuckle rings were vacuum leak-tested. Each tank was hydrostatically tested by filling with water to the normal fill line, prior to the back-filling operation, and then was allowed to remain filled until the time it was to be placed in use for waste storage.

Type III Tanks

The most recently constructed tanks are designated type III tanks (Figure 4). Twenty-seven tanks were built between 1967 and 1981. Tanks 25 through 28, 33 and 34, and 44 through 47 are located in F Area. Tanks 29 through 32, 35 through 43 and 48 through 51 are located in H Area.

The type III tank design was developed after an investigation into the causes of the leaks from the primary vessel of the type I and type II tanks. The conclusions of the study were that the leak-producing mechanism was nitrate stress-corrosion cracking at sites in or near the weld seams, and that stress relieving after fabrication should eliminate the cracking. For the type III tanks, means were provided for heating each finished tank to relieve the stresses generated during fabrication. In addition, some stress patterns were avoided, or minimized, by mounting the roof supporting column on the

foundation pad rather than on the bottom of the primary tank (as in types I and II), and by providing an annular clearance around the roof supporting column. Each primary tank holds 1,300,000 gallons, is 85 feet in diameter, and is 33 feet high.

Type III tanks are similar to the doughnut-like form of type II tanks. Each primary vessel is made of two concentric cylinders joined to washer-shaped top and bottom plates by curved knuckle plates. Steel thicknesses are:

Plate	Thickness, inch
Top and bottom	1/2
Upper knuckle	1/2
Outer wall	
Upper band	1/2
Middle band	5/8
Lower band	3/4
Inner wall	
Upper band	1/2
Lower band	5/8
Lower knuckle	
Outer	7/8 (25 - 28 and 33 - 51))
	1 (tanks 29 through 32)
Inner	5/8

The primary tank is set on a 6-inch bed of insulating concrete within the secondary containment vessel. The concrete bed is grooved radially so that ventilating air can flow from the inner annulus to the outer annulus. Liquid would move through the slots, facilitating detection at the outer annulus, if any were to leak from the tank bottom or center annulus wall.

The secondary vessel is 5 feet larger in diameter than the tank, thus providing an outer annulus 2 1/2 feet wide. The secondary vessel is made of 3/8-inch thick steel throughout. Its sidewalls rise to the full height of the primary tank. The nested two-vessel assembly is surrounded by a cylindrical reinforced concrete enclosure with a 30-inch-thick wall. The enclosure has a 48-inch-thick flat reinforced concrete roof which is supported by the concrete

wall and a central column that fits within the inner cylinder of the secondary vessel. The 48-inch-thick concrete provides radiation shielding; hence, no earth overburden is required.

Cooling for the type III tank is provided by either deployable (water pipe) cooling coil bundles installed through risers in the tank top or 23 parallel (water pipe) cooling coils distributed throughout the tank.

A dehumidification duct in the annulus of each tank is routed from the tank top to the bottom of the annulus where it encircles the tank. The duct has distribution outlets and its cross-sectional area decreases as distance from the air supply increases. In these tanks, additional airflow is directed through the inner annulus, passes beneath the primary tank through radial grooves in the concrete base slab, and is exhausted into the outer annulus.

Tanks 29 through 34 were placed in service prior to 1976 with annulus riser pipes at four locations and interior riser pipes at various locations providing inspection access through 5-inch-diameter ports. All other type III tanks were placed in service after 1976. These tanks have annulus riser pipes at 18 locations that are 8-inches in diameter. These ports are equidistant around the tank and provide for inspection of all of the exterior wall of the primary vessel. In 1982, fourteen to sixteen additional 8-inch diameter ports per tank were drilled in the tops of tanks 29 through 34 to provide adequate access ports for inspection of all of the exterior wall of their primary vessel. Interior riser pipes at various locations provide inspection access through ports with a diameter of from 5 to 8 inches. All ports are equipped with removable plugs.

On these tanks 24 through 34 all butt welds on the primary tanks, except welds on the horizontal roof surface, and all butt welds on the secondary tanks joining bottom plates, knuckle plates, and the lowest courses of center-column and outer-wall plates, were radiographically inspected. Defects were corrected, then they were rechecked radiographically.

On all other type III tanks, all plate welds in the secondary tanks were radiographically inspected. The Quality Assurance Program included inspection of all radiographs by two independent groups of certified weld inspectors and all radiographs were permanently stored for future reference. All spots on the inside or outside of the primary tanks, or the inside of the secondary tanks, where clips or lugs were removed, or where other excisions were made, were examined by magentic particle or liquid penetrant techniques, and any defects were repaired.

All butt welds on the secondary tanks were vacuum leak-tested. All welds in the bottom assemblies of the primary tanks, including knuckle rings and lowest course welds, were vacuum leak-tested before each bottom assembly was lowered into final position, and then tested a second time after the stress-relieving operation. A full hydrostatic test, consisting of filling each primary tank to a depth of 32 ft and allowing it to stand 48 hours, was conducted after stress relieving. No leaks were found by the hydrostatic tests. All circumferential welds in the pipe loops of the deployable cooling coil bundles below the 1/2-inch-thick plate at the base of the riser plug were radiographed. The assembled cooler piping was tested hydrostatically to 500 psi and halide leak tested at 300 psi. Welds in the distributed cooling coils were radiographed and similarly leak tested.

The primary tank was stress-relieved in place after all burning, cutting, welding, and other high temperature work (other than roof attachments) had been completed. Full stress relief, at 1100°F, was accomplished in accordance with the general requirements of the ASME Boiler and Pressure Vessel code.

Inspection Methods

Techniques have been developed for remote examination and evaluation of the waste tanks and ancillary equipment. For visual imaging, direct photography systems developed at SRS are used to perform photographic documentation with cameras inserted into the spaces to be inspected. Optical periscopes, boroscopes, and closed circuit television systems are also used where direct photography is not possible or where these systems provide a more comprehensive examination. Only the direct photography systems will

Notice the appendices refer to WAP, DAP, PSP, etc.

Does this include wide angle ?? Scopes. Say so.

Similar ??

be described since the other systems are used less frequently and are basically familiar systems. Thickness measuring equipment will not be discussed since steel thickness measurements were not made of any waste tank during 1991.

Familiar to whom ??

Wide-angle direct photography is used for general inspections in the annuli of double-wall tanks and the primary vessels of both double-wall tanks and single-wall tanks. This technique uses a 35mm Zeiss-Ikon Halogon Ultrawide camera that surveys a large area in a single photograph. The lens is a 15mm f/8 fixed aperature and fixed focus with a field of focus from 18 1/2 inches to infinity. The lens is distortion free with a 100-degree field of view. The camera is not shielded. A bank of four electronic flash units are synchronized with the camera to provide illumination.

Direct photography is used for detailed inspections. The camera is shielded to reduce the degrading effect of ionizing radiation on the photographic film. The camera's residence time in a waste tank for this technique is longer than the wide-angle direct photographing technique, i.e., few minutes versus a few seconds; hence, shielding is required. The camera used is the 35mm Leitz's Leica CL. This is a range finder camera with interchangeable lenses. Normally a 21mm lens is used for tank inspection. Alternate lenses are available with focal lengths of 28mm and 35mm. Illumination is provided by a single electronic flash unit.

PROGRAM IMPLEMENTATION

Visual Imagery

The 1991 inspection program used four visual imagery techniques. The primary methods for making inspections were the direct photography techniques, i.e., the direct photograph technique for making a series of photographs providing detailed views of the tank and the wide-angle photography technique for obtaining overview of large areas with a single photograph. Closed circuit television systems and periscopes were generally used to further investigate questionable conditions found during scheduled inspections and to troubleshoot process problems in tanks, ancillary cells and pipes.

The continuing inspection program is aimed primarily at evaluating the condition of waste tanks and updating that evaluation with time. This objective was satisfied in 1991 by photographic inspections. The policy developed for photographic inspections in 1972 specified biennial inspection in the annuli of all waste tanks and annual inspection of those tanks in which waste had breached the primary vessel. Biennial inspections do not include all annulus risers, so the time required to inspect a tank through all annulus risers could be as long as four years. However, the wide-angle direct photography method developed in 1974 was used to make annual inspections through all risers where inspections were not made by other photographic methods. Hence, inspections were made through all accessible annulus risers of the double-wall tanks and at least one inspection was made in the interior of each single-wall tank.

1991 Inspection Results

The 1991 inspection program was successfully completed. The annuli of all double-wall tanks and the interiors of single-wall tanks were inspected at accessible risers by at least one photographic technique. Other inspections were made as required by operating conditions and equipment performance. All inspections made in 1991 are listed in Appendix B.

These inspections revealed that the condition of the waste tanks remained virtually unchanged since inspected in 1990. No new leaksites were found in the waste tanks and no evidence was observed that the existing leaksites had leaked since previous inspection. No significant general corrosion of waste tanks was evidenced by the lack of change in their steel surfaces.

Rainwater continued to leak into the annuli of several tanks. After heavy rainfalls water was observed in the annuli of tanks 9 and 10. Efforts to determine the leakpaths for the leakage into tanks 9 and 10 have been unsuccessful. Although dry when inspected, water marks, surface stains, and calcite deposits indicated the leakage of rain or groundwater into the annuli of several other tanks. Inleakage into these other tanks was primarily due to poor riser plug gasket seals and failed seals where process pipes penetrate the tank annuli below grade.

Summary of Inspection Results

The following is a brief description of tank conditions as revealed by inspections and examinations made through 1991.

Tank 1

Tank 1 was put in service in 1954. A small amount of dried waste salt was observed on the annulus floor in 1969. Subsequent inspections have revealed no additional leakage. Hence, the amount of salt in the annulus has not changed. Inspection of the exterior wall of the primary vessel is limited to 25% using existing inspection techniques through the four risers that provide access to the annulus. Examination of the observable portion of the tank wall has not revealed the location of the leak(s). Inspection photographs of the steel surface of the tank and the annulus has shown no significant surface corrosion or other anomalies. Ultrasonic measurements made in 1978, 1979, 1981, 1983 and 1985 showed no detectable thinning of the tank wall has occurred.

Tank 2

Tank 2 was put in service in 1955. Examination of the observable portion (25%) of the exterior of the primary vessel wall and the annulus has shown no leakage, significant surface corrosion or other anomalies. Ultrasonic measurements made in 1967, 1972, 1973, 1977, 1981 and 1985 showed no detectable thinning of the tank wall had occurred.

Tank 3

Tank 3 was put in service in 1956. Examination of the observable portion (25%) of the exterior of the primary vessel wall and the annulus shown or has shown no leakage, significant surface corrosion or other anomalies. Ultrasonic measurements made in 1973, 1977, 1981 and 1985 showed no detectable thinning of the tank wall had occurred.

Tank 4

Tank 4 was put in service in 1961. Examination of the observable portion (25%) of the exterior of the primary vessel wall and the annulus has shown no leakage, significant surface corrosion or other anomalies. Ultrasonic measurements made in 1973, 1977, 1981 and 1985 showed no detectable thinning of the tank wall had occurred.

Tank 5

Tank 5 was put in service in 1959. Examination of the observable portion (25%) of the exterior of the primary vessel wall and the annulus has shown no leakage, significant surface corrosion or other anomalies. Ultrasonic measurements made in 1973, 1977, 1981 and 1985 showed no detectable thinning of the tank wall had occurred.

Tank 6

Tank 6 was put in service in 1964. Examination of the observable portion (25%) of the exterior of the primary vessel wall and the annulus has shown no leakage, significant surface corrosion or other anomalies. Ultrasonic measurements made in 1974, 1977, 1978, 1979, 1981 and 1985 showed no detectable thinning of the tank wall had occurred.

Tank 7

Tank 7 was put in service in 1954. Examination of the observable portion (25%) of the exterior of the primary vessel wall and the annulus has shown no leakage, significant surface corrosion or other anomalies. Ultrasonic measurements made in 1974, 1979, 1981, 1983 and 1985 showed no detectable thinning of the tank wall had occurred.

Tank 8

Tank 8 was put in service in 1956. Examination of the observable portion (25%) of the exterior of the primary vessel wall and the annulus has shown no leakage, significant surface corrosion or other anomalies. Ultrasonic measurements made in 1973, 1977, 1981 and 1985 showed no detectable thinning of the tank wall had occurred.

Tank 9

Tank 9 was put in service in 1955. Leakage from the tank primary vessel into the annulus pan may have occurred as early as 1955 when the "necklace" alarm, a conductivity leak detection device, shorted out permanently. Leakage was not certain until liquid waste was observed in the annulus pan in 1957. Currently the annulus pan contains 8 to 10 inches of leaked dry waste. Examination of the observable portion (25%) of the exterior of the primary vessel wall has shown three leaksites high on the tank wall; 269, 271 and 276 inches above the tank bottom. None of these leaksites is the source of the leaked waste in the annulus pan. The waste leaked at these sites was only

enough to form localized small nodules. The leak(s) that is the source of the waste in the annulus pan has not been observed. Inspections have shown no significant surface corrosion and the ultrasonic measurements made in 1979 and 1983 showed no detectable thinning of the tank wall had occurred.

Tank 10

Tank 10 was put in service in 1955. The first indication that Tank 10 had leaked was in 1959 when dried waste was discovered in the annulus pan during a visual inspection. Currently the annulus pan contains about 2 inches of leaked dry waste. Examination of the observable portion (25%) of the exterior of the primary vessel has not shown the source of the leaked waste or any other leaksite(s). Inspections have shown no significant surface corrosion and the ultrasonic measurements made in 1979 and 1983 showed no detectable thinning of the tank wall had occurred.

Tank 11

Tank 11 was put in service in 1955. Twenty-five percent of the exterior of the primary vessel wall is obserable via the four riser that provide access to the annulus. Inspection performed in 1974 revealed two leaksites. The leaksites are 189 and 235 inches above the tank bottom. Inspections have shown no significant surface corrosion and ultrasonic measurements made in 1973, 1977, 1981 and 1985 showed no detectable thinning of the tank wall had occurred.

Tank 12

Tank 12 was put in service in 1956. Twenty-five percent of the exterior of the primary vessel is observable via the four risers that provide access to the annulus. Inspection in 1974 revealed two leaksites. The leaksites are 93 and 105 inches above the tank bottom. Inspections have shown no significant surface corrosion and ultrasonic measurements made in 1972, 1973, 1977, 1981, 1983 and 1985 showed no detectable thinning of the tank wall had occurred.

Tank 13

Tank 13 was put in service in 1956. Ninety percent of the exterior wall of the primary vessel is observable via the 13 risers that provide access to the annulus. Inspection in 1977 revealed a leaksite 279 inches above the tank bottom. In 1980 another leaksite was discovered 269 inches above the tank bottom. Inspections have shown no significant surface corrosion and ultrasonic measurements made in 1974, 1979 and 1985 showed no detectable thinning of the tank wall had occurred.

Tank 14

Tank 14 was put in service in 1957. The first indication that tank 14 had leaked was in 1959 when dry leaked waste was observed in the annulus pan. Currently the annulus pan contains 12-13 inches of leaked dry waste. Eighty-nine percent of the exterior of the primary vessel wall is observable via the 18 risers that provide access to the annulus. Inspections have located thirty-three leaksites and it is estimated that there are about 50 leaksites in this tank. All of the observed leaksites are near the bottom circumferential weld that is 2.5 feet above the tank bottom, except one leaksite that was observed approximately 24 feet above the tank bottom. Inspections have shown no significant surface corrosion and ultrasonic measurements made in 1979 and 1983 showed no detectable thinning of the tank wall had occurred.

Tank 15

Tank 15 was put in service in 1960. Inspections in 1972 below one of the four risers providing access to the annulus revealed two leaksites near the bottom circumferential weld about 2.5 feet above the tank bottom. Twelve additional risers were installed increasing the observable portion of the primary vessel wall from 25% to 96%. Inspections in 1973 via the additional risers revealed eleven other leaksites. No other leaksite have been found since 1973. Inspections have shown no significant surface corrosion and ultrasonic measurements made in 1972, 1977, 1980 and 1984 showed no detectable thinning of the tank wall had occurred.

Tank 16

Tank 16 was put in service in 1959. Liquid waste was detected in the annulus pan in 1959. Seventy-three percent of the exterior wall of the primary vessel is observable via the sixteen risers that provide access to the annulus. Inspections in 1961 and 1962 through 13 risers revealed about 175 leaksites in the tank wall. In October 1961 and March 1962, two 5 3/4-inch-diameter samples were cut from the top horizontal circumferential weld of the tank wall about 40 feet apart. Metallurgical examination indicated the cause of the cracks was nitrate induced stress corrosion. Extensive inspection performed since 1972 indicated the primary vessel wall has 300-350 leaksites. In 1978, 70% of the leaked waste in the annulus pan was removed leaving an insoluble heel containing approximately 30,000 Ci 137Cs. Waste removal from the interior of the primary vessel was completed in 1980. Inspections have shown no significant surface corrosion. No ultrasonic steel thickness measurements of the tank were made because of the number of leaksites and the presence of leaked waste deposits on most of the primary vessel exterior.

Tank 17

Tank 17 was put in service in 1961. Examination of the steel liner has shown no evidence of failure, significant surface corrosion or other anomalies. leakage?

Tank 18

Tank 18 was put in service in 1959. Examination of the steel liner has shown no evidence of failure, significant surface corrosion or other anomalies. Ultrasonic measurements made in 1977, 1980 and 1983 showed no detectable thinning of the liner bottom had occurred.

Tank 19

Tank 19 was put in service in 1961. Examination of the steel liner has shown no evidence of failure, significant surface corrosion or other anomalies. Ultrasonic measurements made in 1982 and 1985 showed no detectable thinning of the liner bottom had occurred.

OSR 3-4A-W (Rev 1-89)

WESTINGHOUSE SAVANNAH RIVER COMPANY

INTER-OFFICE MEMORANDUM

WER-WME-920732

May 21, 1992

To: C. R. Hayes, 703-18A

From: M. A. Hunter, 703-H MAH

REVIEW OF ANNUAL TANK INSPECTION REPORT FOR F/H HIGH LEVEL WASTE TANK FARMS

The draft Federal Facilities Agreement, Section IX.A.2 requires on-going demonstrations that the tank systems listed in Appendix B are not leaking. This annual tank inspection has been committed to South Carolina Department of Health and Environmental Control by July 1, as per the wastewater permit application package for the F/H Tank Farms, Section 1.6. Please find attached a draft copy of the Annual Radioactive Waste Tank Inspection Program-1991 for your review. Your concurrence/ comments on the adequacy of the report to fill the above stated requirements is requested by June 12, 1992. This will allow time for revision and printing before the July 1 submittal date.

CC: w/o attachment
W. D. Dunaway, 703-18A
K. S. Wierzbicki, 703-H
B. L. Lewis, 703-H
F. G. McNatt, Sr., 704-8H

CRH,
I'd like to take a look at this since I used to work in the group that prepared it. Get w/me prior to acknowledging yes/nea to Hunter
WDD 5/26

CRH,
See my comment @ your note; - else OK
WDD 6/12

OSR 3-4A-W (Rev 1-89)

WESTINGHOUSE SAVANNAH RIVER COMPANY

INTER-OFFICE MEMORANDUM

WER-WME-920732

May 21, 1992

To: C. R. Hayes, 703-18A

From: M. A. Hunter, 703-H MAH

REVIEW OF ANNUAL TANK INSPECTION REPORT FOR F/H HIGH LEVEL WASTE TANK FARMS

The draft Federal Facilities Agreement, Section IX.A.2 requires on-going demonstrations that the tank systems listed in Appendix B are not leaking. This annual tank inspection has been committed to South Carolina Department of Health and Environmental Control by July 1, as per the wastewater permit application package for the F/H Tank Farms, Section 1.6. Please find attached a draft copy of the Annual Radioactive Waste Tank Inspection Program-1991 for your review. Your concurrence/ comments on the adequacy of the report to fill the above stated requirements is requested by June 12, 1992. This will allow time for revision and printing before the July 1 submittal date.

CC: w/o attachment
W. D. Dunaway, 703-18A
K. S. Wierzbicki, 703-H
B. L. Lewis, 703-H
F. G. McNatt, Sr., 704-8H

W-0577

WESTINGHOUSE SAVANNAH RIVER COMPANY
TELECONFERENCE RECORD

DATE 6/15/92 TIME 3:50

PERSON CONTACTED Victor Weeks PARTICIPANTS 2nd call G. Stejskal\C. Hayes

SUBJECT Site mapping information on Arc Coverage

PURPOSE Clarification

PERSONS INCLUDED

DISCUSSION NOTES V. Weeks asked if we could call Phyllis Mann directly and ascertain exactly what she needs (404-347-3402) for her GIS base. EPA wants us to determine Fundamental Study Areas, based on hydrostratigraphy. Surface streams should separate areas. Maps should then be blown up for each Fundamental Study Area and waste units identified.
Returned call to Victor advising him who would contact Phyllis.

We also asked the status of the draft Wastewater permit application comments on the Tank Farm. V. Weeks said he had been waiting for a call from Larry Arrington (SCDHEC) regarding their comments on his comments. Chuck Hayes asked if he could followup with the state and finalize EPA comments so that the SCDHEC would respond to the Wastewater permit. V. Weeks said he would call the SCDHEC immediately after our phone call and try to expedite.

ACTION Contacted Dave Hayes of SRTC and he is calling her to find out exactly what she needs. Don Gordon is contacting her to provide her with info regarding SRS GIS plans and commitments (and possibly site meeting)

DISTRIBUTION

J. Cook, 742-A
G. Stejskal, 742-A
R. Thomas, 742-A
P. Barnard, 742-A
O.B. Wheat, 992-4W
W. Whitaker, 703-41A
D. Gordon, 742-A
D. Hoffman, 992-4W
W. F. Johnson, 992-4W
M. Flora, 992-4W
C. Hayes, 703-18A
D. Taylor, 703-A

W-0577

INTER-OFFICE MEMORANDUM
Savannah River Site

Date: 12-Jun-1992 07:51am EDT
From: TIMOTHY P. GAUGHAN
GAUGHAN-TP-08815 AT A1 AT SASRS2
Dept: WMO
Tel No: 78088

CPA, A-1 message

TO: See Below

Subject: Simulant Runs at ITP

Due to a number of political/administrative reasons - the original simulant testing program at the In-Tank Precipitation (ITP) facility may be separated into two phases: a testing phase without a benzene spike (Phase 1) followed by a testing phase with benzene (Phase 2).

Phase 1 would entail using a simulated salt solution that includes constituents of Tank Farm salt solution, except the radionuclides, a benzene spike and mercury. This simulant will contain a process additive, Sodium Tetraphenylborate (STPB), which could (depending on age and purity) contain up to 650 ppm of benzene due to product degradation. The benzene spike added in the second phase (Phase 2) of the testing will be ~ 1000 ppm to determine stripping column efficiency.

After Phase 1 the used simulant (~ 3000 gallons) would be removed from the ITP testing facility and stored in a tanker truck until Phase 2 is completed. At this time the simulant from Phase 1 & 2 of the testing would be added to Tank 48. The simulant from Phase 1 cannot be added to Tank 48 immediately because a nitrogen purging system designed to mitigate flammability concerns (from organic solids) will not be operative at this time.

The question raised is whether the temporary storage of this simulant from Phase 1 is within the legal boundaries of all environmental regulations. The tanker truck containing this material will most likely be parked near the ITP Cold Chemical area surrounded by a temporary dike. Storage of this simulant in the tanker could last up to 6 months depending upon the progress of Phase 2 simulant testing and DOE approval to introduce benzene into Tank 48.

The current SCDHEC Industrial Wastewater Permit Application for the F/H Tank Farms (ITP included) describes the ITP simulant testing program. In this description the testing simulant is referenced as being stored in the ITP temporary facility tank and sent to Tank 48 when testing is complete and prior to radioactive operations. It should be noted that the ITP facility is currently under the Tank Farm's RCRA Part A permit. The ITP facility will NOT however, begin actual processing of radioactive material until after the SCDHEC Wastewater permit is approved and in place.

Due to the urgency of this issue and its affect on our startup program, I am requesting a response from EPD on this question by Tuesday, June 16th. Keep in mind the decision to modify our test program (and store this simulant) has not been made yet. At this time we are identifying issues that will impact the decision when it is made (Wed June 17th) by both DOE-SR and WSRC.

I can be reached at 7-8088 (Bp# 7230) if you need further information or a more detailed discussion of the why ITP is pursuing this option. Thanx

Distribution:

TO:	Charles R. Hayes	(HAYES-CR-Z9722 @A1@SLSRP1)
TO:	W. DANNY DUNAWAY	(DUNAWAY-WD-O7436 @A1@SLSRP1)
TO:	BRUCE LAWRENCE	(LAWRENCE-BM-O4037 @A1@SLSRP1)
TO:	MONTE HAWKINS	(HAWKINS-M-O6779 @A1@SLSRP1)
CC:	CARY B. STEVENS	(STEVENS-CB-O5981 AT A1 AT SASRS2)
CC:	Barbara J. Clark	(CLARK-BJ-L2439 AT A1 AT SASRS2)
CC:	M.T. Keefer	(KEEFER-MT-O7775 AT A1 AT SASRS2)
C:	Bill Van Pelt	(VANPELT-WB-O7016 AT A1 AT SASRS2)

6/12/92 W057

An inventory (up to 1 million gallons) of the washed precipitate slurry will be maintained in Tank 49 to provide the precipitate slurry feed for the DWPF Vitrification Facility. The washed precipitate slurry generated from the ITP process will be periodically added to this inventory. The precipitate slurry inventory will be thoroughly blended with slurry pumps in Tank 49 prior to being transferred to the DWPF Vitrification Facility. The washed precipitate slurry will be transferred in sub-batches to the DWPF Vitrification Facility via the H/S Interarea Transfer Line (see Section 4.8.6). A sub-batch refers to the quantity of precipitate slurry (approximately 3000 gallons) which is transferred to the DWPF Vitrification Facility at one time.

4.5.2 ITP Start-up Testing

Although the ITP facilities are existing, radioactive operations have not occurred to date. In order to ensure that the processing equipment will function as designed, a start-up testing program will be implemented. This program consists of water test runs to check out process equipment operability and non-radioactive chemical runs to simulate actual process operations. The start-up testing program will consist of conducting full-scale process operations.

During the start-up operations, only water and non-radioactive simulated waste will be used. This precaution will: (1) eliminate the potential exposure of employees to radiation during start-up operations and check-out procedures, (2) eliminate the need for radioactive decontamination in the event that process modifications are identified as a result of the

start-up operations, and (3) allow operators to familiarize themselves with the range of process operations and upset conditions without fear of a radioactive release.

In order to allow non-radioactive operations, a temporary facility was constructed to be a substitute for Tank 48 since Tank 48 already contains radioactive waste materials. The temporary facility consists of a 10,000 gallon operating capacity feed tank (substitute for Tank 48), a flush water tank, a filter feed pump (similar pump characteristics to the feed pumps currently installed within Tank 48), and two diaphragm pumps (used to collect samples at the temporary facility). The temporary facility also limits the amount of waste generated during the start-up testing program by minimizing the size of the feed tank. This start-up program is being initiated under the existing Part A Permit issued to the SRS for this facility. A description of the start-up testing program is provided in this permit application to allow continued start-up testing upon issuance of the Industrial Wastewater Treatment Permit for the Tank Farms.

4.5.2.1 Water Runs

The water runs for ITP process equipment began in August 1989 upon mechanical completion. Additional water runs will be conducted in two phases: system level water runs and integrated water runs. The primary objectives of the system level water run program are:

- Demonstrate the physical integrity of all process piping and vessels.

- Demonstrate the operability of all instrumentation and process controls.
- Demonstrate that logic control for all 12 possible operating schemes function as desired.

For system level water runs, water will be added to the system to be tested using a combination of permanent and temporary piping. The water from system level water runs will be routed to the H-Area Retention Basin.

After water runs are completed for each system, integrated water runs will be performed to demonstrate operation of the entire facility.

The primary objective of the integrated water runs is to ensure the integrity and operability of all components of the ITP system, including temporary facility interfaces, before introduction of a simulated waste. All operations that will be performed during the chemical run program will be demonstrated with water.

The temporary feed tank and associated temporary piping will be thoroughly flushed initially to preclude passing undesirable solids (such as welding slag) into the permanently installed process equipment. Startup screens are installed at strategic locations in the process to trap undesirable solids. These screens will be removed prior to starting the chemical run program.

Filtered water will be added to the temporary feed tank and pumped to the filters, strippers and hold tanks. The water can be recycled back to the temporary feed tank as required until this phase of the start-up program is completed.

Operation of the nitrogen stripping system will be demonstrated. The nitrogen blankets to the filtrate hold tanks will also be initiated.

Transfers between the temporary feed tank and the flush tank will be performed to simulate the transfer of waste to/from Tank 48. The operation of the sample collection system will also be demonstrated. At least one sample will be taken at each sampling location to demonstrate operation of the sampling hardware and sampling technique.

The cleaning systems to each component (filters, strippers, hold tanks, sumps) will be demonstrated using water.

At the completion of Integrated Water Runs, the water may be drained to the H-Area Retention Basin or stored in either the flush tank or filtrate hold tank for future use.

If the system will be down for an extended time before beginning the chemical run program, the filters and strippers will be placed in wet lay-up to mitigate bacterial growth.

4.5.2.2 Chemical Run Program

The chemical run program for the In-Tank Precipitation process will demonstrate the operability of the process using feed streams composed of non-radioactive chemical simulants. The characteristics of the chemical simulant will replicate those of the true process feedstock as realistically as possible to ensure that the test results generated by the program are credible. The temporary facilities will be used to mix, store, and reclaim the simulant. At the completion of simulant runs, the system will be flushed and cleaned using inhibited water and oxalic acid. The filters and the strippers will then be placed in wet lay-up.

The primary objective of the chemical run program is to ensure that the facility will fulfill its design basis function prior to the introduction of radioactive feed. The other primary goals of the chemical run program are as follows:

- Demonstrate filter integrity and efficiency.
- Evaluate the feasibility of specified operating scenarios.
- Determine the optimum combinations(s) of filter feed pump speed and precipitate flow control valve settings to maximize control function stability and filtrate production rate.

- Determine optimum backpulse frequency and filter differential pressure necessary to achieve maximum filtrate production. Backpulse duration will be held at a constant value based on previous tests and vendor literature.

- Evaluate stripper performance.

- Demonstrate filter cleaning operations.

- Identify and resolve any operational and/or safety concerns.

- Train and educate operating personnel in the ITP process, including laboratory personnel.

The chemical simulant will be prepared in the temporary feed tank. The simulant will be made by mixing (in order of addition) 4.81M Na+ salt solution. Surfynol 104E (an anti-foaming agent), sodium tetraphenylborate (STPB) and sodium titanate (ST) to form a 1 wt% solids mixture.

Testing at Savannah River Laboratory (SRL) determined that the hydroxide solution is the "worst case" composition for evaluation of stripper operations.

Benzene and alcohols (methanol and isopropanol) will be added to the feed to test the organics removal efficiency of the strippers. The efficiency of the decontaminated salt solution stripper will be tested at the anticipated worst case amount of organics present in the filtrate. The wash water stripper will be tested at the anticipated worst case amount of organics

present during the washing stage of the ITP process cycle.

In addition to collecting data on stripper performance, data will be collected on the filters to determine the ranges/setpoints of operating parameters for the filter backpulse system, filter differential pressure control, and filtrate production. Data on support systems (i.e., nitrogen supply system, hold tank nitrogen blankets and stripper offgas systems) will also be collected. During the final phase of simulant runs, processing will be conducted in automatic mode to demonstrate full system operability.

The wastewater from chemical runs will be sent to Tank 48. If an emergency discharge occurs, it will be diverted to the H-Area Retention Basin via the storm drain.

Following completion of the chemical run program, cleaning of the ITP filters, strippers and hold tanks will be demonstrated. The filters and the strippers will be placed in wet lay-up to mitigate bacterial growth. The temporary facility will be flushed and cleaned. The temporary facility will be disconnected from the permanent facility and all hardwired and software interlocks and controls configured for permanent operations prior to the start of radioactive operations.

Chuck,
When DHEC does their final inspection on the tank farm, Bobby James & I would like for this letter to be attached to the OIC form. The intent is to notify DHEC that there will be one "A" level operator present for all three facilities at all times (not one "A" for each facility).
Bill Payne.

W-0517

ESH-ESG-92DRAFT

June XX, 1992

Ms. M. C. Reece, District Director
Lower Savannah District Office
South Carolina Department of Health
and Environmental Control
218 Beaufort Street, NE
Aiken, SC 29801

Dear Ms. Reece:

REVISED CERTIFIED OPERATOR-IN-CHARGE (OIC) FOR SAVANNAH RIVER SITE (SRS) WASTEWATER TREATMENT FACILITY (U)

Regarding the agreement between the Department and SRS, and as required by Part II(C), of the SRS National Pollutant Discharge Elimination System permit, enclosed is one copy of the subject form for the following facilities:

- **F-Area Tank Farm**
- **H-Area Tank Farm**
- **In Tank Precipitation (ITP)**

In addition to the OIC, at least one "A" level physical/chemical certified operator will be present at one of these facilities at all times.

Questions may be directed to B. R. James (644-5746), SRS Operator Certification Coordinator, or W. L. Payne (725-9002) of my staff.

Yours very truly,

Draft

M. D. Dukes, Manager
Environmental Support Section
Environmental Protection Department

WLP:xx
Attachments

CRH, W-0577
Make a copy for yourself
5/29

INTER-OFFICE MEMORANDUM
Savannah River Site

Date: 29-May-1992 07:31am EDT
From: ELMER L. WILHITE
WILHITE-EL-T3881
Dept: IWTD
Tel No: 55800

TO: See Below

Subject: Tank 48 Criticality: Saltstone Permit Issue

Yesterday, I convened a group to discuss the potential impacts on saltstone permits of not using sodium titanate (ST) in ITP. The group consisted of:

Kathy Wolf - DWPF Environmental
Tim Gaughan - ITP Environmental
Monte Hawkins - EPD
Danny Dunaway - EPD
C. R. Hays - EPD
Gloria Barnes - Legal
Ed Stevens - IWT

After briefing the group on the situation, we discussed the potential impacts of changing the ITP process to not use ST for any tank.

The group indicated that as many as nine permits could be involved. These are:

NESHAPS (air emissions): Saltstone, Tank Farm (ITP), DWPF
Waste Water: Saltstone, Tank 50, Transfer line, Tank Farm (ITP), and DWPF
Disposal: DWPF

Complicating the permitting picture is the fact that the ITP construction permit is being reviewed by SCDHEC. SCDHEC are under pressure from intervenor groups to go out for public notice and comment, even though public notice is not required for a waste water permit. The consensus of the group is that it is very likely that SCDHEC will decide to go for public notice and comment. SCDHEC has told EPD that they will inform SRS within a couple of weeks whether or not they will go for public comment.

Also, complicating the picture is the fact that the Saltstone disposal permit is up for renewal in October of this year. EPD has sent a request for renewal to SCDHEC. The request stated that nothing in the saltstone process will change.

In our discussion of the "global" change not to use ST, it became evident very soon that such a change could have profound impact on saltstone and ITP. We would have to notify SCDHEC and request modification to our permits. This could result in considerable delay in granting the ITP construction permit. The group also felt very strongly that SCDHEC would be very concerned if saltstone became a Class B or C waste instead of a Class A waste. Even though SRS is not regulated by the SCDHEC radiological branch, a change in the waste classification of saltstone would be viewed by SCDHEC as cause to review the

whole situation again.

The question of the need for a NEPA analysis was discussed. If the "global" change were made, we would certainly have to have a NEPA analysis done. The group indicated that it takes at least 6 to 8 months to get an analysis done and approved.

Another concern with the "global" change is the potential impact on what I have called a "political" concern. Namely, affecting the viability of saltstone in the public/regulatory eye. Kathy Wolf reminded me of an item that the NRC had put in the Federal Register (Vol. 52, #39, 2/27/87, p. 5993). This item relates to the definition of High Level Waste. Following is a quote:

"Incidental wastes generated in further treatment of HLW (e.g., decontaminated salt with residual activities on the order of 1,500 nCi/g Cs-137, 30nCi/g Sr-90, 2 nCi/g Pu, as described in the Department of Energy's FEIS on long-term management of defense HLW at the Savannah River Plant, DOE/EIS-0023, 1979) would also, under the same reasoning, be outside the Appendix F definition".

Appendix F is an appendix to 10CFR50 which defines HLW. Thus, the NRC is tying the low values mentioned in salt waste to not being HLW.

Thus, not using ST could jeopardize the NRC ruling that saltstone is low-level waste.

The group concluded that pursuing the "global" change in ITP should not be pursued.

We then turned to discussing the potential impacts of not using ST in Tank 41 only. In such a situation, SRS would be required to pre-notify SCDHEC of our plan. The group consensus was that, normally, such a change could be handled with no impact, provided that the Saltstone remained Class A. The group felt strongly that, if Saltstone became a Class B or C waste, the State would react adversely. The State would not readily approve such a change; they might delay the ITP construction permit; they might not renew the Saltstone Disposal permit.

Even if not using ST in Tank 41 could be shown to not change the Saltstone classification as Class A, the request would have to be handled very carefully because of the situation with SCDHEC's review of the ITP construction permit. The group indicated that, if such a course of action was to be pursued, the letter to SCDHEC would have to be transmitted before SCDHEC began the public notice/comment period.

Another idea was brought forth by John Fowler. John suggested that, for Tank 41, a small amount of ST be used. The amount to be used would be selected to assure no criticality concern. Since ST was being used, no pre-notification to SCDHEC would be needed. However, Tim Gaughan indicated that the ITP Permit application includes a range of ST that will be added to each batch (or cycle - I can't seem to keep them straight). The minimum amount of ST listed in the permit application is about 2,000 gallons (Tim recalled). I assume that would be too much to implement John's idea.

An issue that has not been mentioned before is that of SRS policy on waste

containing >10 nCi/g but <100 nCi/g TRU isotopes. In managing solid waste, SRS has segregated >10nCi/g waste for storage rather than disposal. Does this policy affect saltstone?

Gus - I plan to summarize this meeting for the group at Monday's meeting in 704-8H. It seems to me that a key element is whether not using ST when processing Tank 41 waste will make Saltstone a Class B waste. The Sr-90 results for Tank 41 from Doug Walker's DPST-88-811 fall into two categories. The two supernate analyses are less than the Class A limit of 40nCi/g. The two calculations (CPES and TAFI) are above the Class A limit by factors of about 3 and 50, respectively. We need to reach a consensus as to which, if any, of those values are representative of the Tank 41 salt.

Distribution:

TO:	Gus K. Georgeton	(GEORGETON-GK-T8231 @A1@SASRS2)
TO:	Walt Tamosaitis	(TAMOSAITIS-WL-T9848)
CC:	John R. Fowler, x7-2293, 704-Z	(FOWLER-JR-T4798 @A1@SASRS2)
CC:	Kathy Z. Wolf	(WOLF-KZ-O9884 @A1@SASRS2)
CC:	MONTE HAWKINS	(HAWKINS-M-O6779)
CC:	Gloria J. Barnes	(BARNES-GJ-B6124)
CC:	W. DANNY DUNAWAY	(DUNAWAY-WD-O7436)
CC:	TIMOTHY P. GAUGHAN	(GAUGHAN-TP-O8815 @A1@SASRS2)

TR FILE
W-0517

WSRC-EPD Telecon Record

Subject Title : Wastewater Permitting ***Date:*** 5/29/92 ***Time:***

Purpose: To clarify issues regarding permitting of the F/H Tank Farms

Call Made By: C. R. Hayes CR Hayes

Person(s) Contacted: J. W. Chapman

Discussion Notes:

Caller	Respondent
Will the PE Certification Language contained in the construction permit application suffice for the final inspection?	Yes! There is no need to produce a separate PE Certification letter. Just provide me with a copy of the statement in the permit application package.
We plan to have procedure manuals in the file cabinets in the control room rather than one dedicated O & M manual in the facility. We have also discussed this with Larry Arrington and he said it was ok.	No problem. This is consistent with past practices.

Additional Actions Needed:
None

Distribution:
L. S. Coward, 703-18A (PFSG-File)
W. D. Dunaway, 703-18A
M. Hawkins, 742-A
C. R. Hayes, 703-18A
M. A. Hunter, 703-H
J. V. Odum, 742-A
P. D. D'Entremont, 703-H
G. S. Hoover, 703-41A
W. L. Payne, 742-A

W-0517

WESTINGHOUSE SAVANNAH RIVER COMPANY
INTER-OFFICE MEMORANDUM
ESH&QA DIVISION TRAINING

MAY 23, 1992 **ESH-TNG-920150**

TO: MATT HUNTER, 703-H

FROM: BOBBY R. JAMES, CCC-2 ROOM 221

RE: ESH-TNG-920148 WMO CERTIFIED OPERATOR COVERAGE (U)

Per our telephone discussions concerning memo ESH-TNG-920148, which addressed how WMO would provide certified operator coverage for F-Tank Farm, H-Tank Farm, and ITP, it is now my understanding that:

- WMO will have an "A" level operator on duty at all three facilities 24 hours a day on weekdays and an "A" level operator on duty 24 hours a day to cover all three facilities on weekends.

Per my telephone conversation with Bill Payne of EPD, this arrangement meets the state requirements for having an "A" level operator on duty 24 hours a day, seven days a week, however, WMO should staff each facility with an "A" level operator even on weekends as soon as possible.

SCDHEC will be notified of WMO's plan to provide appropriate coverage by memo at the same time the permitting group of EPD submits the "Operator-In-Charge" notification form. The memo will simply state that *"WMO will have an "A" level operator on duty 24 hours a day, seven days a week for the facilities included in the permit"*. No special requests will have to be made to SCDHEC or to the Board concerning this matter.

Once the permit is issued, WMO employees at these facilities should be aware of the fact that the state does not distinguish between operator, supervisor, or manager when referring to the term "certified operator". If SCDHEC were to visit or call and ask for the "A" level "operator" on duty, this includes supervisors and managers. We had a problem in a 400-D Area facility once when SCDHEC was doing a phone survey and asked a "D" operator if there was a "C" operator present, which was required; the "D" operator said "no" when in fact his "C" certified supervisor was sitting next to him.

The WMO "A" level operators on duty during weekends should be at one of the three facilities or in transit to one of the three at all times. Also, this person should be very accessible from a communications standpoint.

If I can be of further assistance , please call me at X4-5746.

BRJ

CC: P. A. Croll, CCC-2 Rm. 19
S. S. Cathey, 703-H
G. T. Wright, 703-H
K. S. Wierzbiki, 703-H
J. S. Roberts, 742-A
M. D. Dukes, 742-A
B. Payne, 742-A
C. Hayes, 703-18A
W. Fulton, 705-H
J. A. Titcher, 707-H

OSR 3-4A-W (Rev 1-89)

W-0517

WESTINGHOUSE SAVANNAH RIVER COMPANY

INTER-OFFICE MEMORANDUM

SRT-WED-92-0048

May 22, 1992

CC: W. L. Tamosaitis, 773-A
W. E. Stevens, 773-43A
J. R. Fowler, 704-Z
W. T. Goldston, 704-S
J. F. Jackson, 992-3W

CRH,

This one is important..... we need to review the facts very carefully. Would the TK Farm permit need to be revised also?? How 'bout TK 50 Permit?? Intra-Area Transfer line?? Others?? O-IC's?? Some thoughts to consider — Pls. see me after you've given this some thought.

To: K. Z. Wolf, 704-Z
W. D. Dunaway, 703-18A
M. Hawkins, 742A
G. J. Barnes, 992-3W

From: E. L. Wilhite, 773-43A (5-5800)

E. L. Wilhite

SALTSTONE PERMIT IMPLICATIONS OF CHANGE IN ITP (U)

TK. WDD 5/22

Introduction

An issue of potential criticality in the In-Tank Precipitation (ITP) process has arisen. Apparently, criticality as a result of concentrating fissile nuclides on the sodium titanate planned to be used in ITP cannot be ruled out. This will result in the need for various "Safety Class Items" (such as Nuclear Incident Monitors - NIMs) to be added to the ITP process and facilities. Adding the safety class items is expected to result in a delay in start up of ITP. A possible alternative is to eliminate sodium titanate from the ITP process.

Sodium titanate was included in the ITP process to remove strontium and plutonium. Not using the sodium titanate will result in increasing the concentration of strontium, uranium, and plutonium isotopes in decontaminated salt solution feed to saltstone. Strontium concentrations may increase by 200 times, uranium concentrations will not be affected, and plutonium concentrations may increase by 40 times (based on DFs in ITP that were used to estimate the composition of salt solution in current saltstone permits).

Potential impacts of increasing the concentrations of strontium, uranium, and plutonium isotopes in salt solution include the ability of saltstone to meet required performance objectives, the hazard class of the saltstone facility, required documentation (such as the SAR, radiological performance assessment (PA), waste acceptance criteria, etc.), the saltstone permits, and the overall acceptability of saltstone as a disposal method for waste removed from the high-level waste tanks.

I have begun to consider whether increases in the strontium, uranium, and plutonium isotopes will cause saltstone to exceed required performance objectives. Preliminary information (based on review of past Intera work and on preliminary results from the saltstone PA) indicates that there will be no exceedance.

I have also begun to discuss this situation with the Safety Analysis Report (SAR) group.

I need your assistance to explore the implications of this possible change in ITP for the saltstone permits and to develop a consensus as to whether the permit implications would prohibit making such a change. If, as I suspect, the permit implications would not prohibit the change, I may need your help in developing a plan and schedule to make the necessary changes.

I would also like your help in considering the impact on the overall acceptability of saltstone.

Following are some thoughts relative to potential permit implications and overall acceptability. Would you please consider this and be prepared to comment in a meeting which I hope to schedule next week? I'll be in touch with you to determine the best time and place to meet.

Discussion

1. Saltstone Permits

Saltstone has at least three permits with the South Carolina Department of Health and Environmental Control (SCDHEC). They are an Industrial Waste Water Treatment permit (SCDHEC permit # 12683), an Industrial Solid Waste Disposal Permit (SCDHEC permit # IWP-217), and an EPA Air Permit. I have assumed that the ITP change being considered will have most impact on the treatment and disposal permits. Therefore, I have not considered the air permit or any others. I would appreciate your comments on this assumption.

The potential permit implications that I see are as follows. Each will be discussed below.

- The process (ITP) which produces the waste to be treated in Saltstone will change.
- The radionuclide composition of the waste to be processed in Saltstone and the radionuclide composition of saltstone will change and will be considerably different than that permitted.

- The radioactive waste classification of Saltstone according to the NRC system will change and will be different than that described to SCDHEC.

- Change in ITP Process

The application for the treatment permit (DPSP-85-1143), in the section on Waste Characteristics, states that "The supernatant liquid is decontaminated of radionuclides and certain chemicals by treating with sodium tetraphenyl borate and sodium titanate. The supernatant liquid which is called salt solution is the waste that is the subject of this application." (copy of page attached)

The Engineering Summary Report on the treatment facility (dated February, 1986), in the section on Waste Characteristics, states that "The salt solution liquid is decontaminated of radionuclides and certain chemicals by treating with sodium tetraphenyl borate and sodium titanate. The decontaminated salt solution is the waste that will be treated in the Z-Area wastewater treatment facility." (copy of page attached)

If the change in ITP is implemented, then the process generating the waste will differ from that described in the permits. However, would this necessitate a change in the permit prior to start-up? If so, the change would seem to be a minimal one.

- Change in Composition of Waste

The permit applications (treatment and disposal) have tables showing the "Approximate Chemical Composition of Salt Solution Feed" and the "Approximate Radionuclide Composition of Salt Solution Feed." Attached are copies of these tables from the January 29, 1988 request for modification of the permits. The disposal permit was granted with eight conditions (copy attached). The sixth condition requires notification of SCDHEC if the radioactive composition of saltstone varies significantly from that identified in the permit application. Also attached, for information, is a letter from DOE-SR to SCDHEC reporting on the results of the first semiannual analysis of decontaminated salt solution. It is noted that the carbon-14 result is significantly greater than the value stated in the permit application (0.39 nCi/g vs. 0.009 nCi/g). The value is put into context by explaining that it is much less than the Class A limit of 850 nCi/g for carbon-14.

The key here is the interpretation of "significant." An increase in the strontium-90 concentration in saltstone from 0.4 nCi/g to 2,800 nCi/g (according to D. D. Walker, this is the highest ^{90}Sr concentration observed in a salt solution from the tank farm) is certainly significant. However, in terms of the performance of saltstone, the increase is insignificant (no impact to groundwater and no impact to the inadvertent intruder). If the increase is actually insignificant, can't we simply proceed to process the material and explain when we transmit the results of the analysis?

No! Need Prior Approval

- <u>Change in Saltstone Classification</u>

The radioactive waste classification of saltstone according to the Nuclear Regulatory Commission (NRC) in 10CFR61 is not mentioned in the saltstone permit applications. However, a question on the classification was communicated to DOE-SR in 1985 (letter to R. P. Whitfield from D. E. Wilson, copy attached). A similar question was posed during a presentation to SCDHEC on 7/14/86. A proposed response (copy attached) was sent to DOE-SR on 7/30/86.

The radioactive waste classification limits for ^{90}Sr are 0.04 Ci/m^3 for Class A, 150 Ci/m^3 for Class B and 7,000 Ci/m^3 for Class C. These limits apply to the solid saltstone. By assuming that the density of saltstone is 1.7 grams per cubic centimeter, and that saltstone contains 55 weight percent salt solution (the maximum currently allowed), corresponding classification limits can be calculated for decontaminated salt solution. These are: 42.8 nCi/g for Class A, 160,400 nCi/g for Class B, and 7,490,000 nCi/g for Class C. The radioactive waste classification limits for plutonium (the sum of ^{238}Pu, ^{239}Pu, ^{240}Pu, and ^{242}Pu) are 10 nCi/g for Class A (18 nCi/g in salt solution) and 100 nCi/g for Class C (180 nCi/g in salt solution). There are no limits for uranium.

The highest ^{90}Sr concentration observed in a salt solution from the tank farm, according to D. D. Walker, is 2,800 nCi/g, which, if processed into Saltstone, would result in the Saltstone being a Class B waste.

I suggest that our position here be similar to that suggested in the response to the comment on radioactive waste classification. The saltstone disposal design exceeds the stringent requirements for Class C waste, thus disposing of Class B waste should be allowed. Again, there is a question of when do we notify SCDHEC? Could we (at least for the first batch of waste), simply omit the sodium titanate from ITP, process the waste into saltstone and explain it to SCDHEC when the results of the analyses are transmitted? No!

2. Overall Acceptability of Saltstone

This issue is somewhat more nebulous than the Saltstone permit issue. Saltstone is analogous to the Hanford Grout program. At Hanford, plans are to process double-shell tank waste into grout without removing as much of the radioactivity as at SRS. The Hanford Grout is Class C, according to 10CFR61.

Savannah River Saltstone has been judged by the NRC to be a low-level radioactive waste, even though it comes from high-level waste tanks (Federal Register, 5/25/89, p. 22581, and letter R. M. Bernero to A. J. Rizzo, 9/26/89, copies attached).

The Hanford Grout program is under considerable scrutiny from the states of Washington and Oregon and the Yakima Indian Nation. Oregon and Washington has petitioned the NRC to declare grout a high-level waste unless additional radionuclides are removed. This petition has not been resolved yet by the NRC.

During the NEPA and permitting processes for Saltstone, there was very little public comment. This may have been due to the low radioactivity content of saltstone compared to the robust disposal design.

If the radioactivity content of saltstone is significantly increased by not using sodium titanate in the ITP process, will the acceptability of saltstone be called into question?

ATT 1

SECTION C

WASTE CHARACTERISTICS

This section describes the chemical and physical nature of the wastes and waste analysis plan for sampling, testing, and frequency of analysis. This information is submitted in accordance with the requirements of R.61-79.264 Subpart B and R.61-79.270.14(b)(2) and (3).

1. CHEMICAL AND PHYSICAL ANALYSES

Salt solution feed, and the treated salt solution (saltstone) are the waste forms to be handled by this project. The salt solution will be converted into the non-hazardous solid wasteform (saltstone) by mixing it with a cement and fly ash premix and appropriate admixture. The saltstone will be buried in a non-hazardous waste landfill (see companion industrial solid waste landfill permit application for Z-Area).

a. Salt Solution

The high level radioactive liquid wastes generated at Savannah River Plant (SRP) are stored in large underground carbon steel tanks. The waste is stored in F&H-Areas and consists of two main parts: sludge containing most of the fission products and solution containing soluble salts and most of the Cesium-137. The supernatant liquid is decontaminated of radionuclides and certain chemicals by treating with sodium tetraphenyl borate and sodium titanate. The supernatant liquid which is called salt solution is the waste that is the subject of this application.

The chemical analysis and radionuclide concentrations of salt solution are given in Tables C-1 and C-2. It is an aqueous solution (specific gravity about 1.26) containing about 30 wt% of soluble salts and about 70 wt% water. The waste's pH can be measured with available instruments. The salt solution has been determined to be a hazardous waste because it has the hazardous characteristics of corrosivity

A sump pump is provided in the containment cell. The capacity of the containment cell (approx. 227,400 gallons) is more than adequate to contain the entire contents of the salt solution hold tank.

The flush water receipt tank, will be installed in a concrete containment cell, size 18 ft. x 18 ft., with a capacity of 14,500 gallons at an assumed 6 ft. pit depth.

Both sumps for the flush water receipt tank and the salt solution hold tank containment cells will be equipped with level alarms for leak detection.

3. WASTE CHARACTERISTICS

The high level radioactive liquid wastes generated at Savannah River Plant (SRP) are stored in large underground tanks. The waste is stored in F&H Areas and consists of two main parts: sludge containing most of the fission products, and solution containing soluble salts and most of the Cesium-137. The salt solution liquid is decontaminated of radionuclides and certain chemicals by treating with sodium tetraphenyl borate and sodium titanate. The decontaminated salt solution is the waste that will be treated in the Z-Area wastewater treatment facility.

The chemical analysis and radionuclide concentrations of salt solution are given in Tables 2 and 3. The salt solution (specific gravity about 1.23) contains about 29 wt% of soluble salts and about 71 wt% of water. The

Att 3

TABLE 1

APPROXIMATE CHEMICAL COMPOSITION OF SALT SOLUTION FEED
(Blend Ratio 8 million gallons DWPF to 1 million gallons ETF)

Component	Weight Percent		
	DWPF	ETF	Nominal Blend
H_2O	71.8	69.9	71.6
$NaNO_3$	13.3	21.9	14.3
$NaNO_2$	4.1	0.02	3.6
NaOH	4.2	4.4	4.2
Na_2CO_3	1.4	1.4	1.4
$NaAl(OH)_4$	2.9	0.06	2.6
Na_2SO_4	1.6	0.22	1.4
NaF	0.05	0.017	0.05
NaCl	0.11	0.08	0.1
Na_2SiO_3	0.04	0.2	0.06
Na_2CrO_4	0.04	9×10^{-4}	0.04 (Cr-114 ppm)
NaHgO(OH)	4.2×10^{-6}	5×10^{-4}	6×10^{-5} (Hg-0.5 ppm)
$NaAg(OH)_2$	1.3×10^{-7}	-	1.2×10^{-7} (Ag-0.0008 ppm)
Na_2MoO_4	0.007	-	0.006
KNO_3	7.8×10^{-6}	0.02	0.002
$CaSO_4$	2.3×10^{-4}	0.3	0.034
$Na_2C_2O_4$	0.16	0.05	0.15
Na_3PO_4	0.11	0.02	0.10
NH_4NO_3	6.1×10^{-6}	0.6	0.07
$NaB(C_6H_5)_4$	0.07	-	0.06
Other Salts*	0.007	0.7	0.08
Total Organics	0.10	-	0.09

* Other Salts include:

As	3×10^{-8}	-	3×10^{-8} (0.0003 ppm)
Ba	1.9×10^{-8}	3×10^{-4}	3×10^{-5} (0.3 ppm)
Cd	5×10^{-6}	7×10^{-5}	1×10^{-5} (0.12 ppm)
Se	8×10^{-5}	-	7×10^{-5} (0.7 ppm)
Pb	2×10^{-12}	0.0011	1×10^{-4} (1.3 ppm)

ATT 4

TABLE 2

APPROXIMATE RADIONUCLIDE COMPOSITION OF SALT SOLUTION FEED
(Blend Ratio 8 million gallons DWPF to 1 million gallons ETF)

Radionuclide (half-life, yrs)	nCi/g DWPF	ETF	Nominal Blend
^{3}H (12.33)	10	60	15.7
^{14}C (5730)	0.009	-	0.008
^{59}Ni (80,000)	0.0002	-	0.0002
^{60}Co (5.27)	0.2	0.12	0.2
^{63}Ni (100)	0.02	-	0.02
^{79}Se (~6.5×10^{4})	0.3 w/o Tc	-	0.2
^{90}Sr (29.)	0.4 → 80.0	0.3	0.4
^{90}Y (3.1 hr)[a]	0.4	0.3	0.4
^{99}Tc (2.1×10^{5})	60	-	53
^{106}Ru (1.0)	30	4	27
^{106}Rh (2.18 hr)[a]	30	4	27
^{125}Sb (2.73)	9	0.05	8
^{125m}Te(58 da)[a]	0.2	0.05	0.2
^{126}Sn (~10^{5})	0.2	-	0.2
^{126}Sb (12.5 da)[a]	0.02	-	0.02
^{126m}Sb(19 min)[b]	0.2	-	0.2
^{129}I (1.7×10^{7})	0.035	0.015	0.03
^{137}Cs (30.2)	10	4.9	9.4
^{137m}Ba(2.5 min)[a]	9.2	4.5	8.7
^{147}Pm (2.62)	4	0.4	3.6
^{151}Sm (93)	2	-	1.8
^{154}Eu (8.2)	1	-	0.9
^{155}Eu (4.76)	0.3 w/o TITHNATE	-	0.3
^{238}Pu (87.7)	0.7 → 28.0	0.03	0.6
^{239}Pu (24,000)	0.007 → .28	0.01	0.007
Other Beta, Gamma[c]	-	9	1
Total Alpha Emitters	0.9	0.17	0.9

a Daughter of preceeding isotope

b Daughter of ^{126}Sn

c Miscellaneous short-lived radionuclides

ATT 5

Industrial Waste Conditions
Permit IWP-217

Savannah River Plant
Z-Area Saltstone Disposal Facility
Permit Conditions
October 31, 1986

1. Site shall be constructed and operated in accordance with the permit application dated May 19, 1986, with revisions dated July 30, 1986, unless permit conditions state otherwise.

2. A minimum buffer zone of two (2) feet must be maintained between the seasonal high water table and/or bedrock and bottom elevation of the fill area.

3. The permittee or owner/operator will be responsible for the maintenance of the site during its active life and post closure care period.

4. The site is restricted to the disposal of saltstone generated by the Z-Area waste processing facility and it is the permittee's or owner/operator's responsibility to ensure that no other material is disposed at the site.

5. If, based on the monthly saltstone EP Toxicity testing, it is determined the saltstone is hazardous, all disposal activities should be stopped and this office notified immediately.

6. This office should be notified if the radioactive composition of the saltstone varies significantly from that identified in the permit application.

7. Many changes are anticipated in the State solid waste requirements, and at such time as the Department accomplishes the necessary regulatory changes, the permittee or owner/operator will be required to comply with any applicable portions of such revisions.

8. This permit is subject to periodic review.

Att 6

W-0073

1) MH

2) WDD

Department of Energy
Savannah River Operations Office
P.O. Box A
Aiken, South Carolina 29802

JAN 17 1989

Mr. R. W. Sherer, Director
Division of Water Quality Assessment
and Enforcement
South Carolina Department of Health
and Environmental Control
2600 Bull Street
Columbia, South Carolina 29201

Dear Mr. Sherer:

SAMPLE RESULTS FOR TANK 50 SALT SOLUTION

Enclosed, as required by Special Condition #8 of Industrial Wastewater Construction Permit #12,683, is the first semiannual report of sample results for the radionuclide component of the salt solution in Tank 50. This salt solution will be fed into the Z-Area Wastewater Treatment Plant, and becomes a component of the saltcrete which is disposed of in vaults.

The concentration of radionuclides in the sample is consistent with the approximate composition included in the permit application with the exception of Carbon-14. The amount of Carbon-14 in the sample (0.39 nCi/g) is significantly greater than the approximate concentration in the permit application. However, the absolute value is still small and is far below the 10CFR61 Class A limit of 850 nCi/g for Carbon-14. A copy of this letter with the enclosure is being provided to the Bureau of Radiological Health, as required by the construction permit.

Questions from your staff may be directed to W. G. McMillan (803/725-1447).

Sincerely,

/S/ G. B. Gmel

S. R. Wright, Director
Environmental Division

EEC:WGM:gis

Enclosure

cc w/encl:
J. B. Ruiter, SCDHEC-Columbia
H. G. Shealy, SCDHEC-Columbia
R. K. Cauthen, SCDHEC-Aiken

bcc w/encl:
W. C. Reinig, Du Pont, SRP J. S. Roberts, Du Pont, SRP
B. M. Lawrence, Du Pont, SRP

ATT 6

TMA/Norcal

STATION: DU PONT SAVANNAH RIVER PLANT
SAMPLE NO.: H Area Tank 50
MATRIX: Salt Solution

REF. DATE: 8/8/88
QUAN. REC'D: 532 g. (2 bottles)

TMA/Norcal No. 739-1
Rep't. Units (s) nCi/g (∓ % error, 1 σ)

NUCLIDE	
^{3}H	6.03 E+00 (8.)
^{14}C	3.90 E-01 (7.)
^{58}Co	<5.2 E-04
^{51}Cr	<8.2 E-02
^{59}Ni	<2.1 E-04
^{60}Co	3.85 E-04 (23.)
^{63}Ni	9.89 E-04 (7.)
^{65}Zn	<5.6 E-04
^{79}Se	8.36 E-02 (15.)
^{89}Sr	<1.11 E-03
^{90}Sr	1.88 E-02 (6.)
^{90}Y	1.88 E-02 (6.)
^{93}Zr	<1.27 E-03
^{95}Nb	<4.75 E-04
^{99}Tc	2.39 E+01 (5.)
^{103}Ru	1.50 E-03 (27.)
^{106}Ru	2.20 E-01 (3.)
^{106}Rh	2.20 E-01 (3.)
^{125}Sb	1.12 E+00 (3.)
^{125m}Te	2.63 E-01 (17.)
^{123}Sn	2.97 E-01 (3.)
^{126}Sb	3.51 E-02 (3.)
^{126m}Sb	2.61 E-01 (6.)
^{129}I	2.53 E-03 (6.)
^{131}I	<3.5 E-03
^{134}Cs	<4.6 E-04
^{137}Cs	2.42 E-01 (3.)
^{137m}Ba	2.42 E-01 (3.)
^{141}Ce	<1.13 E-03
^{144}Ce	<3.6 E-03
^{147}Pm	<1.3 E-06
^{151}Sm	<4.5 E-04
^{154}Eu	<6.5 E-04
^{155}Eu	<1.53 E-03
^{238}Pu	2.17 E-04 (4.)
$^{239+240}Pu$	7.53 E-06 (17.)
Gross Beta , gamma	1.22 E+01 (9.)
Gross Alpha	1.64 E-01 (8.)

South Carolina Department of Health and Environmental Control

2600 Bull Street
Columbia, S.C. 29201

Commissioner
Robert S. Jackson, M.D.

Board
Moses H. Clarkson, Jr., Chairman
Gerald A. Kaynard, Vice-Chairman
Oren L. Brady, Jr., Secretary
Barbara P. Nuessle
James A. Spruill, Jr.
William H. Hester, M.D.
Euta M. Colvin, M.D.

November 14, 1985

Mr. R. P. Whitfield, Director
Environmental Division
Department of Energy
Savannah River Operations Office
P.O. Box A
Aiken, SC 29802

RE: Proposed Z-Area Saltstone Facility
Savannah River Plant
SCD890008989

Dear Mr. Whitfield:

This office has completed its review of t[illegible] waste permit application for the above referenced facility, [illegible] March 5, 1985, and additional information dated August 9, 1985 for compliance as a totally enclosed treatment facility. It appears that this facility does not qualify based on the following:

1. An EPA clarification on the definition of a totally enclosed treatment facility, dated July 27, 1981, states that a treatment facility consisting of a series of unit operations must be integrally connected between each unit.

2. Section D-3 of the permit application states that "The HWM facility will have a trailer unloading station for transfer of salt solution and flush water during periods of maintenance or contingency actions." The use of a trailer for transferring waste between units does not qualify as being integrally connected.

In addition, the permit application has received a cursory review by the Bureau of Radiological Health. A copy of the review memorandum is attached for your information. The concerns listed should be addressed in order to facilitate review of the permit application.

Please contact this office if you have any questions.

Sincerely,

David E. Wilson, Jr.
Facility Engineering
Bureau of Solid and Hazardous Waste
Management

DEW:sdb

Attachment

cc: Hartsill Truesdale
Kin Hill
Virgil Autry
Jack Kendall

South Carolina Department of Health and Environmental Control

Board
Moses H. Clarkson, Jr., Chairman
Leonard W. Douglas, M.D., Vice-Chairman
Gerald A. Kaynard, Secretary
Barbara P. Nuessle
Oren L. Brady, Jr.
James A. Spruill, Jr.
William H. Hester, M.D.

Commissioner
Robert S. Jackson, M.D.

April 22, 1985

MEMORANDUM

TO: Debbie Browning, Environmental Engineer
Bureau of Solid & Hazardous Waste, EQC

FROM: Virgil R. Autry, Director
Div. of Rad. Mat. Lic. & Compl
Bureau of Radiological Health

SUBJECT: Proposed Z-Area Saltstone Facility

We have completed our review of the subject permit applications. I have also enclosed comments provided by the Radioactive Materials Division engineers.

Basically, the proposed solidification for the supernate solution is in accordance with the waste form classification for Class A waste as specified in 10 CFR Part 61, Land Disposal Requirements for Low-Level Radioactive Waste. This federal regulation has been adopted by DHEC as a matter of compatibility. Our evaluation was based on this specific regulation although it is not applicable to this federal facility. We find that their proposed method of solidification would meet the requirements of this regulation for Class A waste. There are however numerous issues required by 10 CFR 61 that have not been addressed in this application.

SRP proposed a rather unique approach in that they will pump the waste mixture directly into a trench and allow a 24 hour cure period and then backfill the formed monolith. Normally, waste of this nature is processed and placed into steel containers, and its proper mixing and solidification is verified prior to transport and disposal by a process control program.

Therefore, we have the following concerns about SRP's proposal:

1. Will there be a process control program and quality assurance to verify the waste mixture and that it has properly cured once it has been pumped to the trench?

2. Will there be verification that the radionuclide concentration and transuranics stay within the allowances for Class A waste and not exceed Class C limits? (Ref. 10 CFR 61)

3. Is the 24 hour cure time sufficient taking into account cold weather and high humidity?

4. Will there be residual or free standing liquids formed which will not be solidified thus increasing the possiblity of leaching and migrating to the ground water.

5. Will a test be performed to determine the leachability of radionuclides from the solidified waste monolith as was done for nitrates?

We also envision site contamination from this particular process caused by spills and leaks in piping systems, equipment, etc. Although the radionuclide concentrations are quite low (nCi/gr), we would except to see some impact of this open operation on the surrounding area. It would entail some cleanup of the process area at some future date; possibly the removal and disposal of earth. However, I am sure SRP will minimize this to the extent practical through their health physics coverage.

We also find that the geohydrological evaluation of the Z-area disposal site has been prepared in accordance with applicable regulations. However, they do not elaborate on the specifics of their groundwater monitoring program. They indicate there will be one, but do not describe in detail the parameters of the program. We recommend review of the geohydrological data by our groundwater division.

It is inherent that there will be some leaching of radionuclides from the waste monolith due to infiltration of water into the disposal units. The predominant radionuclides of concern will be technetium-99 and tritium. However, we assume the effects would be minimal and within all state and federal regulatory standards. This could be predicted through a groundwater model.

One of the basic questions that also comes to mind, are NEPA requirements applicable to this project, e.g., an Environmental Impact Statement, appraisal, or a negative declaration? If so, has this issue been addressed by SRP, specifically DOE?

We have only performed a cursory review of the information presented in this application from a radiological view. If this particular activity were subject to our jurisdiction, we would of course require substantially more information to include procedures, quality assurance, health physics considerations, and other related health and safety items.

The proposed application submitted by SRP to solidify the supernate waste stream is basically in accordance with applicable regulations for shallow land disposal of radioactive waste. The siting and engineering requirements established by federal regulations have been addressed to some extent. Our major concerns are (1) will the radionuclide concentrations for fission products and transuranics be maintained consistent with those specified in their application by continual sampling and analysis (2) will the liquid waste be properly solidified and cured to minimize leaching and subsequent migration into the groundwater.

Should you require any additional information, or if you would like to discuss the radiological implications in more detail, please let me know.

VRA:kn

COMMENT 3. Before the proposed Z-Area IWP can be placed on public notice, documentation concerning the storage of listed hazardous wastes in the high-level storage tanks, which generate the salt solution, must be submitted.

RESPONSE Please refer to documentation submitted 7/24/86 (letter, Wright to Truesdale).

COMMENT 4. Drainage and run-off from the Z-Area disposal site is to be collected in sedimentation basins. The location of sedimentation basin discharges should be given.

RESPONSE The locations of the sedimentation basins are shown on Drawings W780530 and W780534 which are included in Section B of the application. The effluent from these basins will be discharged to McQueen Branch which feeds into Upper Three Runs Creek. (Page. D-13 in the Permit Application.)

COMMENT 5. The Waste Analysis Plan in Sectio[illegible] include sampling and analysis for the sal[illegible]on, provisions should be made to includ[illegible]ysis to verify that radionuclide concentra[illegible]roducts and transuranics stay within the allow[illegible] A waste and do not exceed Class C limits.

ATT 8

RESPONSE Page C-15, Section 3.a. Test Methods & Frequency of Analysis. The words "Salt Solution" were removed from the first line in that paragraph. The second sentence beginning with "Chromium and pH..." was removed. Sampling and Analysis procedures for the salt solution are given in the Defense Waste Processing, Z-Area Wastewater Treatment Facility, Construction Permit Application submitted to SCDHEC on February 27, 1986.

The Savannah River Plant has evaluated saltstone against the NRC regulation 10 CFR 61, and saltstone was determined to meet the guidelines for Class A waste as shown in the attached table.

However, the method selected for disposal exceeds the more stringent requirements for disposal of Class C waste (i.e., intruder protection and waste form). Although the NRC regulation does not apply to DOE facilities, samples of the salt solution will be periodically collected and analyzed for composition of radioactive materials. Based on these analyses, the radioactive composition of saltstone will be calculated for comparison to 10 CFR 61 guidelines. These analyses and comparisons will be available for SCDHEC review.

COMMENT 6. Section D-1 refers to studies concerning the possible use of locally available cement and fly ash rather than API Class H cement and API Class C fly ash. These studies must be approved by this Department before any changes in treatment process materials are made.

RESPONSE Prior to using other than the specified API Class H cement and Class C fly ash, studies will be performed to demonstrate equivalency in saltstone properties. These studies must be approved by SCDHEC before any changes in treatment process materials are made. (Revised page D-3 in the Permit Application.)

COMMENT 7. Section D-1 also includes the possible use of set retarders and dispersants during mixture. Proposed materials to be used and their affect on the final saltstone product must be given.

RESPONSE Set retarders and dispersants are typically added to construction concretes and grouts to modify rheological properties of the un-set materials. The addition of these admixtures in amounts up to approximately 0.5 weight percent retards gel strength development and therefore improves the process handling characteristics of the saltstone. The Savannah River Laboratory tested 19 commercial admixtures with simulated salt solution to produce saltstone. Of those tested, five (5) proved to be effective

repositories, a license under Part 61 would be required as before. DOE would not necessarily be precluded from proceeding with such disposal, but as has always been the case DOE would need to obtain the Commission's approval. The NRC staff has been working with DOE to develop appropriate classifications for defense reprocessing wastes under existing laws and regulations. These efforts have led to agreement that certain decontaminated salts at Savannah River and West Valley, generated incidentally in the course of processing, should not be classified as HLW. Additional efforts are now underway to review materials to be produced at Hanford in projected operations, to determine whether the disposal thereof is subject to Commission licensing.

(e) Restricting DOE Options for GTCC Management

DOE argued that the proposed amendments would limit its statutory authority, under the LLWPAA, to develop a comprehensive policy for management of GTCC waste.

The Commission considered the proposed rule to be entirely consistent with the "comprehensive scheme for developing a policy for disposal of GTCC wastes" referred to in this comment. The proposed rule did not constrain DOE's ability to "identify disposal options, financing mechanisms, and the legislation needed to implement them." Nor did the proposed rule require disposal of GTCC wastes prior to submittal of DOE's recommendations to Congress. The proposed rule only recognized that GTCC wastes must be disposed of in a facility licensed by the NRC—a constraint imposed by the LLWPAA

In DOE's 1987 report to Congress regarding management of GTCC wastes (DOE/NE-0077), DOE stated that certain regulatory actions were needed before DOE could proceed with identification of disposal options and costs. One of these actions was a decision by NRC whether or not to proceed with development of a concentration based definition of high-level waste. The Commission has decided not to develop such a definition for the reasons previously discussed. Thus, one of the regulatory impediments previously identified by DOE will be removed by this rulemaking.

(f) Reference to Analyses of Kocher and Croff

In the proposed rule, the Commission cited a technical report which had recently been published (Kocher, D.C. and A.G. Croff, *A Proposed Classification System for High-Level and Other Radioactive Wastes*, ORNL/TM-10289, Oak Ridge National Laboratory, 1987). The Commission cited this report to support its view that evaluations of the waste isolation capabilities of "intermediate" disposal facilities would be so speculative and site-specific that such analyses would not provide a technically defensible basis for classifying wastes as HLW or non-HLW. The Commission further stated that it could not accept an alternative classification approach presented in that report because that approach was based solely on the short-term storage and handling risks associated with the heat and external radiation levels generated by a waste rather than on the degree of waste isolation required following disposal. The authors of the cited report (Kocher and Croff) commented on the proposed rule alleging that the Commission had misrepresented the content and conclusions of their report.

As discussed in the detailed analysis of public comments, the Commission acknowledges that its statements could have been misunderstood. The Commission's purpose in referring to Kocher and Croff's report was solely to support its view that the proposal presented in the ANPRM, i.e., classification of wastes based on analyses of the projected performance of "intermediate" disposal facilities, should not be pursued because of the limited development of these facilities and because their performance is likely to be highly site-specific. The Commission continues to believe that Kocher and Croff's report supports this view. Other references to Kocher and Croff's work are withdrawn.

(g) Licensing Under Part 61

Concerning alternatives to geologic repository disposal, some comments argued that the licensing of any alternative disposal method should not necessarily be under the framework of Part 61, as was proposed in § 61.55. This would be too restrictive in their view.

The Commission's regulations for licensing of radioactive waste disposal consist solely of 10 CFR Part 60, which applies to disposal in a geologic repository, and 10 CFR Part 61, which applies to land disposal other than in a geologic repository. A wide variety of disposal methods, including all of those currently proposed as "intermediate" disposal methods, could be licensed under Part 61. Thus, the Commission does not believe that § 61.55 places any unnecessary restrictions on DOE.

On the contrary, as provided in § 61.1, Part 61 establishes procedures, criteria, and terms and conditions with respect to "land disposal of radioactive waste". In implementing this objective, § 61.3 requires that the disposal of low-level waste at any "land disposal facility" must be authorized udner Part 61. Section 61.7 notes that additional technical criteria might be needed for licensing of disposal facilities other than "near-surface" disposal. If needed, such criteria would be added to Part 61 before licensing an "intermediate" disposal facility. Because "land disposal facility" is defined broadly (so as to include any facility other than a geologic repository), the reference to licensing under Part 61 is proper and in conformance with the existing regulatory structure.

(h) Mixed GTCC Waste

EPA raised the possibility that some GTCC wastes would also contain hazardous materials subject to RCRA (Resource Conservation and Recovery Act) regulations. The Commission acknowledges this possibility as well as the importance of steps to insure that "mixed" GTCC wastes are managed appropriately. DOE will need to consider applicable RCRA requirements as well as those arising under the Atomic Energy Act. Should RCRA requirements associated with GTCC waste represent a significant impediment to placing a geologic repository in service, DOE will still have the option to propose the use of a separate facility.

(i) Limiting State Responsibility

A number of comments wanted the Commission to promulgate regulations making all radioactive waste which is hazardous for over 100 years a Federal responsibility. Congress clarified Federal/State responsibilities for radioactive waste in the LLWPAA. States are responsible for all commercially-generated Class A, B, and C LLW. The Federal government is responsible for the disposal of HLW and defense LLW. In view of this statutory framework, which the Commission considers to be compatible with protection of public health and safety, there would be no basis for any Commission action at this time.

Changes From the Proposed Rule

Only one change from the proposed rule has been made in these final amendments. Proposed § 61.55(a)(2)(iv) required geologic repository disposal of GTCC waste "unless proposals for disposal of such waste in a disposal site licensed pursuant to this part are submitted to the Commission for

UNITED STATES
NUCLEAR REGULATORY COMMISSION
WASHINGTON, D. C. 20555

XC. staff

SEP 1 6 1989

Copy to LSRCH

Mr. A. J. Rizzo
Assistant Manager for Operations
U.S. Department of Energy
Richland Operations Office
P.O. Box 550
Richland, Washington 99352

Dear Mr. Rizzo:

We have reviewed your letter dated March 6, 1989 concerning the classification and disposal of the Hanford double-shell tank waste. Your letter and supporting information assert that the double-shell tank waste planned for disposal by grouting in near-surface vaults is not high-level waste (HLW), and that U.S. Nuclear Regulatory Commission (NRC) licensing is not required. Your letter requests NRC concurrence in this position.

As you know, our staffs have met on several occasions over the past year in an effort to determine which of the Hanford tank wastes are properly classified as HLW. We consider that the applicable definition of HLW, for purposes of classifying the Hanford tank wastes, is that set forth in 10 CFR Part 50, Appendix F. Specifically, HLW is defined as "those aqueous wastes resulting from the operation of the first cycle solvent extraction system or equivalent, and the concentrated waste from subsequent extraction cycles, or equivalent, in a facility for reprocessing irradiated reactor fuels."

The rulemaking record for Appendix F specifically recognizes a number of "incidental," non-HLW waste streams associated with reprocessing plant operations. These include cladding hulls, ion exchange media, sludges, and miscellaneous trash generated during reprocessing operations. Not mentioned, however, are wastes resulting from further processing of HLW (e.g., volume reduction) or removing non-radioactive materials that were added to the HLW for improved processing and/or storage (e.g., the addition of alkaline material to neutralize acidic HLW). At West Valley and the Savannah River Plant, NRC has agreed that such wastes are not HLW. At Hanford, the question of waste classification (and NRC licensing authority) has been complicated by the mixing of waste from various sources over the past 45 years. This mixing has changed the original characteristics of the wastes and has resulted, in some cases, in the mixing of HLW and low-level waste (LLW). Consequently, it is now difficult to directly differentiate between HLW and LLW, using the source-based definition of Appendix F.

RECEIVED DOE-RL
OCT 2 1989
AMO

In earlier meetings of our staffs, criteria were suggested for determining when such wastes should be classified as "incidental" wastes rather than as HLW, and these criteria were documented in our letter of November 29, 1988. Your March 6, 1989 letter records U.S. Department of Energy's (DOE's) application of these criteria. Specifically, your letter proposes that the bulk of the key radionuclides (i.e., strontium, cesium and transuranics) would be separated for disposal in a geologic repository, so that only three to five percent of the original inventories of those radionuclides would be disposed by grouting in near-surface vaults. Your letter also states that the concentration of radionuclides in the grout will be comparable to Class C LLW as defined by 10 CFR Part 61 for cesium and transuranics, and to Class A or B for the remainder. Finally, your letter evaluates the practicability and cost-effectiveness of additional radionuclide removal. An additional separation process, beyond those originally contemplated, was found to be cost-effective for removal of an additional six million curies of cesium. This step would further reduce the total activity disposed in the grout facility to two to three percent of the inventory of HLW that originally entered the tanks. DOE is now proposing to perform this additional radionuclide removal to improve the isolation of HLW. The NRC agrees that the criteria used by DOE for classification of the grout feed as LLW are appropriate. Therefore, the grout facility for the disposal of the double-shell tank waste would not be subject to our licensing authority.

Note →

Your letter indicates that the radionuclide inventory is an estimate based on existing computer models, rather than actual analyses of tank waste. Given the uncertainty in the actual radionuclide inventory, we endorse your plans to sample and analyze the grout feeds before disposal in an effort to control the final composition of the grout feed. If in the course of conducting this sampling program, you find that the inventories of key radionuclides entering the grout facility are significantly higher than you now estimate, you should notify us so that the classification of the waste can be reconsidered. The NRC requests that DOE periodically submit summaries of the analytical results of all the samples to NRC and other affected parties in a timely manner.

Note → Our position on the double-shell tank waste should not be interpreted to reflect a decision on disposal of single-shell tank waste or to establish a precedent in any other context. We intend to defer judgment on the classification of single-shell tank waste until after DOE has completed its program of characterizing this waste. We anticipate that final documentation will be issued for public comment before a decision is made on the disposal of single-shell tank waste.

If you should have any questions or comments about this letter, please contact me or Dr. Michael J. Bell, Chief, Regulatory Branch, of my staff at (301) 492-0560.

Sincerely,

Robert M. Bernero, Director
Office of Nuclear Material Safety
and Safeguards

cc: Terry Husseman
WA Department of Ecology
William Don Tahkeal
Yakima Indian Nation
Jeff Breckel
Oregon/Washington Liaison

W-0517

WESTINGHOUSE SAVANNAH RIVER COMPANY
INTER-OFFICE MEMORANDUM
ESH&QA DIVISION TRAINING

MAY 20, 1992 ESH-TNG-920148

TO: MATT HUNTER, 703-H

FROM: BOBBY R. JAMES, CCC-2 ROOM 221

WMO CERTIFIED OPERATOR COVERAGE (U)

I have reviewed the information you submitted concerning certified operator coverage for ITP, F-Tank Farm, and H-Tank Farm. I do not feel that it it would be appropriate at this time to make a special request to the South Carolina Environmental Certification Board (SCECB) or to the South Carolina Department of Health and Environmental Control (SCDHEC) that WMO be allowed to utilize operators who are not certified at the appropriate level be "in charge" of these facilities at any time. In order to make a special request of this nature requires DOE concurrence. We have assured DOE in the past that the lack of certified operators would not be a problem even for new facilities since we would plan ahead and have an aggressive training program.

The law and WSRC procedures state that there be at least one appropriately certified operator on duty for each shift the facility is in operation. You have stated that this would require 15 "A" level operators for these three facilities and that you cannot provide that type of coverage with experienced operators at this point. I suggest that EPD inform SCDHEC that WMO will staff these facilities as follows:

- WMO would have 2 "A" level operators on duty each shift that these facilities are in operation that would be "in charge" and responsible for their operation; one "A" operator in F-Area and one in H-Area for the Tank Farm and ITP. There is nothing that states that an operator cannot be in charge of more than one facility at a time.

This would require, as a minimum, 10 "A" level operators. You have stated that you already have 8 that are experienced in the operation of these facilities. I am sure that WMO would not have a problem in obtaining 2 more "A" operators out of 33 that are presently available in WMO.

I will be glad to work with EPD in proposing this arrangement to SCDHEC if it is acceptable to WMO. Please respond as soon as possible so that we can resolve this issue and proceed.

BRJ

CC: P. A. Croll, CCC-2 Rm. 19
S. S. Cathey, 703-H
J. S. Roberts, 742-A
M. D. Dukes, 742-A
B. Payne, 742-A
C. Hayes, 703-18A
W. Fulton, 705-H
J. A. Titcher, 707-H

TRFILE
W-057

WSRC-EPD Telecon Record

Subject Title : Wastewater Permitting ***Date:*** 5/22/92 ***Time:***

Purpose: To obtain status / clarify issues regarding permitting of the F/H Tank Farms

Call Made By: C. R. Hayes CR Hayes

Person(s) Contacted: L. E. Arrington

Discussion Notes:

Caller	Respondent
Are we still awaiting comments on the Tank Assessments from EPA?	We received preliminary draft comments on the Tank Assessment Reports on 5/21. EPA wants to wait a few days before sending them formally. At the time we receive them we will send SCDHEC and EPA comments to SRS. Also, SCDHEC position is that everything has been done that can be done with ERF comments.
What does all this mean in relation to the construction permit.	We still will hold off on any decision concerning the permit until we get final comments on TAs from EPA. At that time we will have a meeting to discuss path forward on the permit (e.g. whether or not to put permit on public notice).

Additional Actions Needed:
SCDHEC to hear from EPA before proceeding with comments to SRS.

Distribution:
L. S. Coward, 703-18A (PFSG-File)
W. D. Dunaway, 703-18A
M. Hawkins, 742-A
C. R. Hayes, 703-18A
M. A. Hunter, 703-H
J. V. Odum, 742-A
G. F. Stejskal, 742-A
P. D. D'Entremont, 703-H
G. S. Hoover

W-0517

CRA,
You will need to get involved w/this. Monte/Myself will assist. This could also impact TK. Farm permit — other??
5/19

INTER-OFFICE MEMORANDUM
Savannah River Site

Date: 19-May-1992 09:41am EDT
From: ELMER L. WILHITE
WILHITE-EL-T3881
Dept: IWTD
Tel No: 55800

TO: See Below

Subject: Saltstone Permit Question Related to Tank 48 Criticality

I've been asked to coordinate investigation of the implications versus the saltstone permit of eliminating sodium titanate in the In-Tank-Precipitation process. This is being considered to alleviate a potential criticality concern in Tank 48. The elimination of sodium titanate could involve all waste tanks or only a few, including the first tank to be processed.

Not using sodium titanate will result in sending more strontium-90, plutonium and uranium to saltstone (10 to 100 times as much as listed in the "nominal salt solution composition"). I'm in the process now of accumulating information to show that there's no technical concern with this change (no impact on groundwater, etc.).

I would like to get the relevant people from Saltstone (yourself plus others?), EPD (Danny Dunaway and Monte Hawkins) and Legal (Gloria Barnes) together to discuss potential strategies to pursue this option.

I've talked to Gloria Barnes this morning. She needs a copy of the Saltstone Permits and correspondence with the State. Kathy, could you please send this information to her?

As soon as I get my technical information together, I'll send it out to you and begin scheduling a meeting.

Kathy, if there's someone else that should be involved, please let me know.

Thanks!

Distribution:

TO:	Kathy Z. Wolf	(WOLF-KZ-O9884 @A1@SASRS2)
CC:	Gloria J. Barnes	(BARNES-GJ-B6124)
CC:	MONTE HAWKINS	(HAWKINS-M-O6779)
CC:	Walt Tamosaitis	(TAMOSAITIS-WL-T9848)
CC:	W. DANNY DUNAWAY	(DUNAWAY-WD-O7436)
CC:	James F. Jackson	(JACKSON-JF-Z7863)
CC:	W.T. GOLDSTON	(GOLDSTON-WT-O9910 @A1@SASRS2)

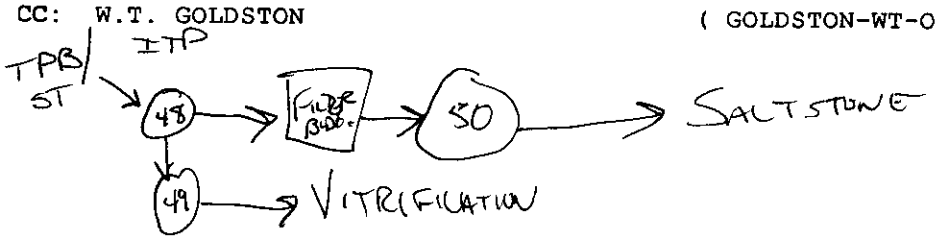

OSR 3-4A-W (Rev 1-89)

W-0517

WESTINGHOUSE SAVANNAH RIVER COMPANY

INTER-OFFICE MEMORANDUM

WER-WME-920679

May 15, 1992

To: N. C. Boyter, 703-A

From: G. T. Wright, 703-H

F/H TANK FARM AND ITP INDUSTRIAL WASTEWATER TREATMENT FACILITY PERMIT STATUS

The Savannah River Site has been directed by the South Carolina Department of Health and Environmental Control (SCDHEC) to permit the F/H Tank Farms and ITP as wastewater facilities. The permit application package for the F/H Tank Farms and ITP was submitted to SCDHEC on July 8, 1991. Informal comments were received from SCDHEC on April 14, 1992 and responses were returned on May 1. A meeting with SCDHEC was held on May 6 to discuss concerns with the responses and to resolve several items. Based on those discussions, SCDHEC has accepted the responses. SCDHEC is now awaiting the Environmental Protection Agency's comments on the Phase I and II portions of the Tank Assessment Reports for the F/H Tank Farms before issuing the Wastewater Construction Permit. It is not known when these comments will be received, however, any comments or concerns will require formal responses before the construction permit is issued.

Once the construction permit is received, SRS will need to evaluate any special conditions included by SCDHEC to assess 1) their impact on facility operation and 2) Waste Management's ability to comply. Once all requirements are in-place, SRS will then invite SCDHEC for a final inspection and facility walkdown. The inspection must occur before the operating permit can be issued.

Open items that require resolution or completion before the operating permit is issued are listed on the attachment.

Attachment:

ACTION ITEMS	TARGET DATE	RESPONSIBLE PARTY	COMMENTS:
Finalize BMP Plan	Complete	WMRC	Current BMP Plan is adequate and is being revised.
Operator proposal submitted to - ESH&QA Training - SCECB	Complete/Accepted 6/5/92	WMO/WMRC ESH&QA Training	The current operator coverage proposal will be presented to the South Carolina Environmental Certification Board.
Finalize OIC Logbook requirement with SCDHEC Aiken office	5/29/92	WMRC	SCDHEC (Columbia office) is willing to accept the current records (roundsheets) as well as the retention system as the logbook required by WW regulations. The Columbia office has deferred authority to Aiken office
Finalize O&M Manual requirement with SCDHEC Aiken office	5/29/92	WMRC	SCDHEC (Columbia office) is willing to accept the procedure files for operation and maintenance as the O&M Manual required by WW regulations. The Columbia office has deferred authority to Aiken office.
PE Certification -Ensure F/H Tank Farms certification is adequate	5/29/92	WMRC	Statements provided in the permit application may suffice and additional PE certification may not be necessary. SCDHEC-Aiken has authority.
-In-Tank Precipitation	Complete		
-H Diversion Box-8 & H/S InterArea Transfer Line	6/19/92	Construction/WMRC	Review of documentation is proceeding and may be complete ahead of schedule.
-Replacement High Level Waste Evaporator	Prior to Operation	Construction/WME	Certification will be required prior to operation
Receive and Respond to Comments on Tank Assessment Reports	2 Weeks from Receipt of Comments	WM/EPD/DOE	These comments will require resolution prior to issuance of WW Construction Permit
Invite SCDHEC for Final Inspection	Prior to Operating Permit	EPD/WMRC	Needs to be done for operating permit to be issued. All requirements must be in place at this time.

WER-WME-920679
May 15, 1992

cc: w/attachment

J. V. Odum, 742-A
M. Hawkins, 742-A
A. R. Gough, 742-A
S. S. Cathey, 703-H
R. W. Harral, 703-H
R. M. Satterfield
W. D. Dunaway, 703-18A
L. S. Coward, 703-18A
R. W. Wilson, 703-H
V. G. Dickert, 703-F
C. G. Lampley, 241-121H
A. S. Greer, 241-102H
D. T. O'Rear, 703-H
I. K. Sullivan, 241-84H
K. S. Wierzbicki, 703-H
B. L. Lewis, 703-H
K. Z. Wolf, 704-15S
J. A. Pike, 703-H
T. P. Gaughan, 241-120H
P. D. D'Entremont, 703-H
R. K. Larsen, 703-H
M. A. Hunter, 703-H
WME Fileroom
File Code: 175.15

W-0517

OSR 3-4A-W (Rev 1-89)

WESTINGHOUSE SAVANNAH RIVER COMPANY

INTER-OFFICE MEMORANDUM

WER-WME-920680

May 14, 1992

To: [redacted]

From: Matthew Hunter, 703-H MAH

RESPONSE TO COMMENT 16 ON THE F/H TANK FARM WASTEWATER PERMIT APPLICATION PACKAGE

In the response to comment 16 on the wastewater permit application package, information on the groundwater monitoring activities for F/H tank farms was committed to SCDHEC by May 15. In a recent telephone conversation between you and Larry Arrington of SCDHEC (see attached), it was stated that the additional information was no longer necessary because it is already being submitted to SCDHEC on a quarterly basis in the Savannah River Site Groundwater Monitoring Program report. For this reason, no further information is being forwarded to SCDHEC unless specifically requested.

CC: w/attachment

G. T. Wright, 703-H
J. V. Odum, 742-A
M. Hawkins, 742-A
A. R. Gough, 742-A
S. S. Cathey, 703-H
R. W. Harral, 703-H
R. M. Satterfield, 773-70A
W. D. Dunaway, 703-18A
L. S. Coward, 703-18A
R. W. Wilson, 703-H
V. G. Dickert, 703-F
C. G. Lampley, 241-121H
A. S. Greer, 241-102H
D. T. O'Rear, 703-H
I. K. Sullivan, 241-84H
K. S. Wierzbicki, 703-H
B. L. Lewis, 703-H
K. Z. Wolf, 704-15S
J. A. Pike, 703-H
T. P. Gaughan, 241-120H
P. D. D'Entremont, 703-H
R. K. Larsen, 703-H
WME Fileroom
File Code: 175.15

WSRC-EPD Telecon Record

Subject Title : Wastewater Permitting *Date:* 5/12/92 *Time:* _____

Purpose: To obtain status / clarify issues regarding permitting of the F/H Tank Farms

Call Made By: C. R. Hayes CR Hayes

Person(s) Contacted: L. E. Arrington

Discussion Notes:

Caller	Respondent
The review comment relative to the submission of groundwater monitoring data; We submit analyses on a quarterly basis to Mathis / Wilson.	No problem. If we have any further concerns we will contct you. Otherwise, consider this comment taken care of.
Have you received comments from EPA on the Tank Assessments?	Not as of yet.
Have you had a chance to review Mott Filter Test Facility proposal yet?	Not yet. I will try to get something out in next few days.

Additional Actions Needed:
SCDHEC to respond to SRS response on review comments.

Distribution:
L. S. Coward, 703-18A (PFSG-File)
W. D. Dunaway, 703-18A
M. Hawkins, 742-A
C. R. Hayes, 703-18A
M. A. Hunter, 703-H
J. V. Odum, 742-A
N. N. Turner, 704-T

JR File
W-0517

WSRC-EPD Telecon Record

Subject Title : Wastewater Permitting **Date:** 5/12/92 **Time:** _____

Purpose: To obtain status / clarify issues regarding permitting of the F/H Tank Farms

Call Made By: C. R. Hayes CR Hayes

Person(s) Contacted: L. E. Arrington

Discussion Notes:

Caller	Respondent
The review comment relative to the submission of groundwater monitoring data; We submit analyses on a quarterly basis to Mathis / Wilson.	No problem. If we have any further concerns we will contct you. Otherwise, consider this comment taken care of.
Have you received comments from EPA on the Tank Assessments?	Not as of yet.
Have you had a chance to review Mott Filter Test Facility proposal yet?	Not yet. I will try to get something out in next few days.

Additional Actions Needed:
SCDHEC to respond to SRS response on review comments.

Distribution:
~~L. S. Coward, 703-18A (PESG File)~~
W. D. Dunaway, 703-18A
M. Hawkins, 742-A
C. R. Hayes, 703-18A
M. A. Hunter, 703-H
J. V. Odum, 742-A
N. N. Turner, 704-T

W-0517

May 1, 1992

TO: Danny Dunaway, Manager
Permitting Field Support Group
WSRC Environmental Protection Department
742-A

DOE CONCURRENCE FOR THE RESPONSE TO SCDHEC REGARDING F/H-AREA TANK FARM CONSTRUCTION PERMIT APPLICATION

Based on agreement with DOE/SR LWD, formal concurrence is not necessary for the subject response. Please send the response to SCDHEC.

Gary S. Hoover

Gary S. Hoover
Air and Water Compliance Branch
DOE/SR-Environmental Compliance Div.
Bldg. 703-41A
(x5-3968)

cc:
Cindi Blair-McManus, DOE/SR LWD, 703-H
Chuck Hayes, WSRC EPD, 742-A
Gary Hoover, ECD
File

J.R. File
W-0517

WSRC-EPD Telecon Record

Subject Title : Wastewater Permitting **Date:** 4/28/92 **Time:** _____

Purpose: To obtain status of SCDHEC review of F/H Tank Farms Tank Assessment Reports

Call Made By: C. R. Hayes, G. S. Hoover CR Hayes

Person(s) Contacted: L. E. Arrington

Discussion Notes:

Caller	Respondent
What is latest status of your review of Tank Farms Phase I and Phase II Tank Assessment Reports?	We (SCDHEC) have approximately 10 questions / comments on the Phase I Report. We are drafting comments for Phase II now. A couple of these are proposed as special conditions and will not require a response. Myself, Carl Richardson, and Marion Sadler need to meet and discuss comments. To date, we haven't seen EPA- Region IV comments. Still anticipate seeing their comments by the end of this week (5/1). We will let you know when we hear something

Additional Actions Needed:
SCDHEC to hear from EPA before proceeding with comments to SRS.

Distribution:
L. S. Coward, 703-18A (PFSG-File)
W. D. Dunaway, 703-18A
M. Hawkins, 742-A
C. R. Hayes, 703-18A
M. A. Hunter, 703-H
J. V. Odum, 742-A
G. F. Stejskal, 742-A
P. D. D'Entremont, 703-H

W-0517

Westinghouse
Savannah River Company

P.O. Box 616
Aiken, SC 29802

ESH-FSG-920318

April 27, 1992

Mr. R. L. Peterson, Chief
Environmental Compliance Branch
Field Office, Savannah River
U. S. Department of Energy
P. O. Box A, Building 703-41A
Aiken, SC 29802

Dear Mr. Peterson:

HIGH LEVEL RADIOACTIVE WASTE (HLRW) TANK FARM COMPLIANCE ISSUES (U)

Per your verbal request on April 24, 1992, to J. S. Roberts, attached is a description of the HLRW Tank Farm Compliance Issues. The information is based on a recent WSRC memorandum (P. D. d'Entremont to G. T. Wright, April 3, 1992).

Yours truly,

J. V. Odum, Manager
Facility Support Group

BML:sam
Attachment

CDA,
FYI
4/26

Letter, J. V. Odum to R. L. Peterson
ESH-FSG-920318, April 27, 1992

BCC: R. R. Campbell, 703-A
G. T. Wright, 703-H
J. S. Roberts, 742-A
G. J. Barnes, Centennial
P. D. d'Entremont, 703-H
M. Hawkins, 742-A
W. D. Dunaway, 703-18A
B. M. Lawrence, 742-A
EPD File, 742-A

Attachment 1

HLRW Tank Farm Compliance Issues

Secondary Containment RCRA Standards

Of the 50 tanks in the RCRA part A permit application, 17 tanks definitely do not meet the standards -- the nine that have leaked and the 8 type IV tanks. Seven tanks are of questionable conformance -- the sound type I tanks; SRS has requested that SCDHEC approve these seven tanks as equivalent devices for secondary containment. The remaining 25 tanks fully meet to the standards. All other operating equipment meets the standards with the exception of the 1H (242-H) evaporator overheads equipment. (See attached Tables 1 and 2)

It should be noted that C. T. Main found that all of the tanks are fit for continued use as long as existing controls (ventilation, dewatering, etc.) are continued. We believe that this satisfies the RCRA requirement for assessments of tanks that don't meet secondary containment standards (265.191).

The secondary containment regulations are the only RCRA regulations for which equipment or procedures can be found in the tank farms that are clearly deficient. However, there are other regulations for which an interpretation could be made that the tanks farms ar out of compliance, although in all cases SRS believes that it is meeting the regulations.

Sampling and Analysis

SRS infrequently does a total RCRA analysis on incoming waste streams (The last one was in 1989). Also, because of ALARA concerns SRS does not use the EPA protocols for the analytical procedures. We believe that the SRS practices are in compliance with the regulations, which are somewhat vague, but SRS is certainly out of line with commercial RCRA practices.

Inspections

RCRA requires a daily inspection of the externally accessible portion of the tank system, which could be construed to require lifting the annulus plugs on all tanks once per day for a visual inspection (we do this at once every two months on a tickler). We believe that the daily inspection requirement does not apply to viewing the external of our tanks because 1) the external of our tanks is not accessible by a person, which we believe is the intent of the regulations, and 2) lifting annulus plugs would be a significant ALARA concern. Also, the preamble to this regulation indicates that the requirement is intended to be an easy thing to do as part of a daily inspection routine,

which clearly would not include lifting riser plugs. We believe that the daily tank-top inspections required in our roundsheets satisfies the RCRA requirement.

LDR Storage

The questions of whether the HLRW storage is an LDR compliance issue has been addressed by the LDR FFCA and is no longer an issue.

Table 1

Tank Farm Conformance to RCRA Secondary Containment Standards
Reference: SCHWMR R.61-79.264.193

Description	Identification	Conforms to Standards?	Status
Type I tanks that have leaked	Tanks 1, 9 - 12	No: Waste in secondary containment	Inactive*
Sound type I tanks	Tank 2 - 8	Questionable: SRS has petitioned they be approved as equivalent devices for secondary containment	Inactive*
Type II tanks	Tank 13	No: Waste in secondary containment	Will be active when 1H is operated
	Tanks 14 - 16	No: Waste in secondary containment	Inactive*
Type III and IIIa tanks	Tanks 25-49,51**	Yes	Active
Type IV Tanks	Tanks 17-20, 22, 24	No: Single-walled	Inactive***
	Tanks 21 and 23	No: Single-walled	Active for non-discretionary receipts from RBOF

Table 2

Tank Farm Conformance to RCRA Secondary Containment Standards

Evaporators	242-F	No.	In cold standby
	242-H	Conforms except for overheads equipment	Inactive and ready to operate
	242-16F	Yes	Active
	242-16H	Yes (The assessment showed one deficiency, which has been repaired)	Active
Pump Pits	All	Yes	Some active, some inactive
Transfer Lines	All	Yes	Some active, some inactive
Diversion Boxes	All	Yes	Some active, some inactive

* Inactive tanks and equipment may receive non-discretionary inputs, such as inhibitors or catch tank receipts

** Tank 50 has a wastewater permit and is not included in the RCRA Part A permit application

*** Tank 17 recently received some non-hazardous tritiated water from K area

W-0517

Westinghouse
Savannah River Company

P.O. Box 616
Aiken, SC 29802

ESH-FSG-92-0284

May 1, 1992

Mr. L. E. Arrington, Engineer
Industrial and Agricultural Wastewater Division
South Carolina Department of Health
and Environmental Control
2600 Bull Street
Columbia, South Carolina 29201

Dear Mr Arrington:

SRS RESPONSE TO SCDHEC REVIEW COMMENTS ON F/H AREA HIGH LEVEL RADIOACTIVE WASTE (HLRW) TANK FARM CONSTRUCTION PERMIT APPLICATION PACKAGE (U)

Ref: 4/24/92 Conference Call, DOE-SCDHEC-WSRC

Please find enclosed the SRS response to the subject review comments. The SRS would like to meet with SCDHEC personnel at your earliest convenience to discuss these responses. In addition, a list of questions / issues that were brought up in the referenced conference call is being developed for further discussion.

Also, per the referenced call, it is our understanding that the In-Tank Precipitation Facility (ITP) will not be permitted separately, but instead will be permitted along with the F/H Tank Farms under one construction permit.

Again, the SRS appreciates your assistance in this matter. Please contact C. R. Hayes (725-8838) if there are any questions.

Yours very truly,

W D Dunaway

W. D. Dunaway, Manager
Permitting Field Support Group
Environmental Protection Department

CRH:pr
Attachment

CC: M. C. Reece, SCDHEC, Lower Savannah District
C. Richardson, SCDHEC, Columbia
S. R. Wright, 703-41A (2) Concur *
* w/one attachment

BCC:

C. Blair-McManus, 703-H
M. C. Chandler, 703-H
L. S. Coward, 703-18A *
P. D. D'Entremont, 703-H
M. D. Dukes, 742-A
W. D. Dunaway, 703-18A
T. P. Gaughan, 241-120-H
R. W. Harral, 703-H
M. Hawkins, 742-A
C. R. Hayes, 703-18A
W. F. Hindle, MDC-84
G. S. Hoover, 703-41A
M. A. Hunter, 703-H
B. L. Lewis, 703-H
J. V. Odum, 742-A
R. L. Peterson, 703-41A
J. S. Roberts, 742-A
G. F. Stejskal, 742-A
K. S. Wierzbicki, 703-H
K. Z. Wolf, 704-15S
G. T. Wright, 703-H
Central Files, 703-A *
EPD Fileroom, 742-A

* w/attachment

1. Page 3, why does the transfer line from the RBOF/RRF facilities begin at the security fence of the facility and not at the basin and building?

Response: To maintain consistency with the other wastewater regulated units, the transfer line should begin at the RBOF exterior wall because prior to exiting the facility, the waste could be diverted back into the facility. The point in the permit application was picked arbitrarily and no longer agrees with how transfer lines to other facilities such as ETF and DWPF are permitted. Westinghouse Savannah River Company (WSRC) suggests that this point be changed in the wastewater permit application. Therefore SRS recommends the permitted facility boundary be the transfer line as it exits the RBOF facility wall.

2. Has the integrity of the interarea transfer lines been verified?

Response: Yes. In 9/91, both of the F/H InterArea Transfer Lines (IALs) were pressure tested and both passed.

3. Certifications do not appear to cover all components of the system. For example, only the H-Area Diversion Box #8 is certified, however there are eight diversion boxes in this area.

Response: H-Area Diversion Box #8 (HDB-8) is a special case because it is a newly constructed facility not yet in operation. The engineering certification for the H/S Interarea Transfer Line and the Replacement Evaporator System are also provided for the same reason. The remainder of the F/H Tank Farm facilities were already in operation when the permit application package was submitted and therefore are covered under the engineering certification on page 13 of the permit application package. Components of the tank farms are not listed due to the large number of components; however, specifics of the professional engineer inspection are listed.

4. Page 23, why is SRS including the waste transfer lines to/from tank 16 in the submittal when tank 16 was removed from service in 1972?

Response: Tank 16 was removed from active service in 1972 and has undergone waste removal operations but is still awaiting closure action. When closure begins, the subject transfer lines will be used to transfer out

any small volume of residual waste from the tank or the annulus for processing. The lines are included in the application since they will be used in the future.

5. No chemicals (process or otherwise) shall be added to the waste tanks that will alter the composition of the F/H ETF effluent from that which was evaluated from the NPDES permit.

Response: This concern is addressed near the bottom of page 42 and again at the top of page 45 of the permit application. SRS would not object to this language being placed in the construction permit as a special condition to ensure that the composition of the F/H ETF effluent will not exceed permit requirements.

6. Page 44, can we accept the addition of new piping (not replacement) and chemical feed systems as normal operation, not requiring department approval? This might be OK if all piping and/or feed systems are within the tank farm boundary and do not add to or influence outside streams such as those going to F/H ETF.

Response: The equipment referred to in the sections on Waste Tank Use and Process Chemical Additions on page 44, is the equipment that will be used to aid removal of waste from the tanks and for corrosion control measures. The equipment mentioned is already described in the application. Chemical feed systems may be added to not only aid in the processing of the waste but for corrosion control measures. However, the addition of this equipment and/or chemical feed systems would not cause the F/H ETF to violate its NPDES permit limits.

7. Page 54, the evaporator overheads pass by a gamma monitor that measures the radioactivity level. The monitor is used to determined the radioactivity level and subsequent flow path. It is stated that these monitors have not functioned reliably and may be removed from service. Are these monitors the source of gamma analysis done in the overheads hold tank? Since they are not reliable and/or may be removed from service, how is the radioactive quality of this wastewater, which eventually flows to F/H ETF and outfall H-016, monitored?

Response: The primary control on the evaporator overheads is batch

sampling and analysis prior to transfer to the F/H ETF. The samples are analyzed using a Gamma Pulse Height Analyzer (PHA) to determine its radioactive content. The gamma monitors are used to screen for gross changes in the radioactive quality of the wastewater that would provide early detection of process upset.

8. Page 54, the cesium decontamination process is used only when the Cs-137 content of the overheads is too high to send directly to the F/H ETF. How is the Cs-137 content determined if the gamma monitors are not reliable and/or removed? There does not appear to be an option, based on the drawings, to send the wastewater that does not meet the Cs-137 requirements back through the CRCs from the overheads hold tank. What criteria determine if the Cs-137 concentration is too high to send to F/H ETF?

Response: The primary control on the evaporator overheads is batch sampling and analysis prior to transfer to the F/H ETF. The samples are analyzed using a Gamma Pulse Height Analyzer (PHA) to determine its radioactive content. The gamma monitors are used to screen for gross changes in the radioactive quality of the wastewater that would provide early detection of process upset. If the overheads do not meet the F/H ETF criteria, the waste is sent back to the evaporator feed tank, not through the CRC (this is shown in Figure 4-2). Only when the overheads are consistently higher than average are they sent through the CRC for additional cesium removal.

The cesium limits for the evaporators are administratively controlled by SRS procedures. The F/H ETF has established administrative limits for the influents to the facility based on the wastewater and NPDES permit limits and the ETF's process performance. These limits are used to determine if the overheads are to be sent to the ETF.

9. Page 75, the CRC and pump tank are being eliminated from the replacement evaporator system. Will the demisters be the only means of removing cesium in this system? Is removal of the CRCs anticipated for all evaporator systems if so, have the demisters proven their ability to replace the CRCs in radionuclide removal?

Response: Tests have been conducted to verify the DF (Decontamination

Factor) of the improved demister for the Replacement High Level Waste Evaporator (RHLWE) is adequate and the effluents will be within release limits to the F/H ETF. There are no plans for retrofitting the existing evaporator systems since current demister design is working efficiently and the CRC's are available for use.

10. Page 77, is the radiation monitor that is located in the mercury removal tank of the replacement evaporator system and which functions to activate the interlocked diversion valve system, the same as those monitors which were indicated on page 54 to be unreliable? If not, is this monitor considered and proven reliable? If the monitor is the same type, wouldn't a more reliable monitor be preferred?

Response: The primary control for the RHLWE of the evaporator overheads is batch sampling and analysis prior to transfer to the F/H ETF. The samples are analyzed using a Gamma Pulse Height Analyzer (PHA) to determine its radioactive content. The gamma monitors are used to screen for gross changes in the radioactive quality of the wastewater that would provide early detection of process upset.

11. Page 107, this office should be notified of any emergency discharge that occurs during the chemical runs.

Response: This comment is assumed to refer to ITP chemical runs. Unplanned or emergency discharges of this system would be reported to the Savannah River Site Operations Center (SRSOC) and Site Issue Reportability and Issue Management (SIRIM) systems which would in turn notify SCDHEC as required.

12. Page 105-7, following completion of the chemical runs, what chemicals will be used during wet lay-up and where will they be discharged?

Response: Water added to the F/H Tank Farms is inhibited water which prevents corrosion of the process piping and bacterial buildup. Any chemicals that will be used during chemical runs (listed in the permit application on page 106) as well as the inhibited water used in the flush and wet lay-up of the components will be sent to either Tank 48 or 50. The chemicals added to Tank 48 will be processed in the first feed batch

sent to ITP and the chemicals added to Tank 50 will be processed by the Z-Area Saltstone facility. Therefore there will be no discharges to the NPDES permitted outfalls.

During wet lay-up, the system will be flushed with inhibited water which contains sodium hydroxide at a high pH. Some components of the system may require wet storage (ie. stripper columns, hold tanks or the filters) and may be filled with inhibited water. The need for wet lay-up will be determined by the downtime between chemical and radioactive runs. The remainder of the system will be drained.

13. Page 128, why is tank 13 used on a continuous basis (HHW evaporator feed tank) when it has one or more documented cracks?

Response: As stated in both the Wastewater Permit Application and the Phase II Tank Assessment, Tank 13 does have cracks in its primary tank. However, due to tank farm configuration (Tank 13 feed line piping) it is the only tank that can be used to feed the 242-H evaporator. Because of the cracks, administrative controls are maintained to assure that the waste level is kept well below the crack elevations. The liquid level is monitored and maintained ten inches (approximately 35,000 gallons) below the lowest wall crack. A photographic inspection of the tank and annulus is performed annually to look for increases in crack size and the presence of new crack sites. Charles T. Main, Inc. of Charlotte, the independent preparer of the tank assessments, certified that the tank was fit for this use as long as these controls were continued (Phase II Tank Assessment pg. 143). Also, it should be noted that the crack site in Tank 13 is near the top of the tank. This allows sufficient capacity to continue its use as the 242-H evaporator feed tank. When the 242-H evaporator is retired, Tank 13 will be removed from active service. The 242-H evaporator will need to be utilized to support waste removal operations until after the Replacement High Level Waste Evaporator is brought into service.

14. SCDHEC construction permit #13,105 approved the transfer line to the F/H ETF which the F/H High Level Tank Farm will tie into at the F/H ETF force main valve pit. The approved transfer lines are HDPE pipe. Is the wastewater from the evaporators compatible with these lines?

Response: The evaporator overheads are compatible with the HDPE pipe.

HDPE pipe has proven its reliability over the past four years, during which time it has been accepting overheads from the existing evaporator systems. SCDHEC has accepted the use of this piping in the current permitted lines to accept evaporator overheads which are slightly basic water that contains low levels of radioactivity. The main constituent of the waste that is of concern with the compatibility of the HDPE pipe is sodium hydroxide. Chemical Engineer's Handbook lists polyethylene as being completely resistant to sodium hydroxide (pg. 23-32), therefore, the presence of this constituent should not be of concern (Perry and Chilton, Fifth Edition). It has also been stated in the F/H ETF process sewer permit application (#13,105) that "High Density Polyethylene material such as DRISCO Pipe 8600 is commonly used in the nuclear power industry in containing radioactive waste. It's strength characteristics is comparable to the highest quality PVC pipe available."

15. Page 170-184, the diversion box layouts have some nozzles labeled as spare, is there piping associated with the spare nozzles? If so, where does it lead? Also, these layouts indicate nozzles "abandoned or capped," emphasis on or, how are the spare and abandoned nozzles physically protected against accidental use?

Response: These referenced nozzles have dummy Hanford connectors which are equivalent to blind flanges attached to prevent use. Administrative controls in addition to the physical controls are used to prevent the incorrect connecting of the jumpers. Since these jumpers have been custom fit for each transfer, it is difficult to connect the jumpers to the wrong nozzles. If a transfer were to require a jumper that did not already exist, it would have to be fabricated. Fabrication of new jumpers requires thorough technical reviews and approvals, thus eliminating the possibility of incorrect design configuration.

16. Is there groundwater monitoring for the high level tank farms? If so, the extent of monitoring and results to date should be submitted to this office. (Based on department evaluation, monitoring or additional monitoring may be required.)

Response: Yes, the F/H Tank Farms' groundwater is monitored. A summary of the well installation and sample results will be submitted to SCDHEC by May 15, 1992.

17. Do the high level tank farms have stormwater runoff control? If so, please describe the control measures currently in place.

Response: Yes, stormwater runoff from the tank farms is controlled and monitored. The tank farms are divided into stormwater zones (6 in H-Area and 3 in F-Area) to direct the stormwater flow from distinct portions of the tank farms through the monitors. The stormwater is monitored to prevent radioactive contamination from being released to the environment. Each zone is monitored using an in-line gamma monitor (NaI scintillation detector), with a readout and hi alarm in the control rooms. The diversion gates are located downstream of the monitors and automatically divert to a rubber lined stormwater retention basin if the monitors detect radioactivity levels of 10 disintegrations/minute/ milliliter gamma or greater above background. The monitors are located upstream from the gates so that any contamination detected is diverted to the basins. When a monitor alarms, the stormwater at that monitor is sampled and analyzed to verify that it is clean before the gate is manually diverted back to the outfalls. These gates also automatically divert if the monitor malfunctions. Administrative controls dictate that the gates are manually diverted to the retention basin during specified operation, such as waste transfers, radioactive equipment removal, etc. Periodic sampling is done at downstream outfalls. The stormwater that is diverted to the retention basins is sampled and released through a permitted outfall if it is within NPDES limits; if the stormwater is not within limits, it can be sent to the F/H ETF or utilize portable equipment for processing before release.

18. This office is concerned by the statement that secondary containment for replacement items is not required for items that match the description in the permit. We would like the option, now or at a post permit date, to require secondary containment on the items that fail or have the potential to fail and whose failure could impact the environment.

Response: This point has already been discussed in the negotiations on the Federal Facilities Agreement (FFA) and the three Parties agreed to adopt language from RCRA. Appendix B, paragraph D.5(c) addresses responses to leaks. This paragraph states, "If the sources of a release was a leak to the environment from a component of a tank system without secondary

containment, the DOE shall provided the component of the system for which the leak occurred with secondary containment that satisfies the requirements of Subsection C of this Appendix before it can be returned to service, unless the source of the leak is an above ground portion of a tank system that can be inspected visually..." The FFA defines tank systems as follows:

> Tank System(s) shall mean those tanks, including their associated ancillary equipment and containment systems, listed or otherwise identified in Appendix B to this Agreement. This Appendix may be revised by agreement of the Parties. (pg. 7)

It further goes on to define ancillary equipment as follows:

> Ancillary Equipment shall mean any device including, but not limited to, such devices as piping, fittings, flanges, valves, and pumps, that is used to distribute, meter, or control the flow of hazardous waste from its point of generation to a storage or treatment tank(s), between hazardous waste storage and treatment tanks to a point of disposal on-site, or to a point of shipment for disposal off-site. (pg. 3)

19. Is there soil contamination, resulting from the radiation component of the wastewater, around the pipes transferring the wastewater to and through out the high level tank farm system? If so, is there any plans to remove or remediate this soil? Is there any potential for contaminated soils, or components thereof, to leach into groundwater?

Response: Contaminated soil has been found in the tank farm in the past. SRS's understanding is that these items will be handled under the provisions of the FFA, which would require removal and remediation of the soil contamination. Soil contamination discovered after the effective date of the FFA will be handled according to Section X of the agreement. This section would require the site to be placed on the Site Evaluation list found in Appendix G. Along with the present contaminated sites already listed there, these sites will be evaluated for future closure action. The present and future sites will require Removal Actions as discussed in Section XIV.

F/H TANK FARMS WASTEWATER PERMITTING ISSUES

- PE TO CERTIFY AS BUILT CONDITIONS
- ADDITIONAL OFFICIAL COMMENTS FROM SCDHEC/EPA/ERF ON PERMIT AND TANK ASSESSMENTS
- RCRA 3/3 LAND BAN IMPACT
- SCDHEC ACCEPTANCE OF WM CERTIFIED OPERATOR COVERAGE PROPOSAL
- DOE DIRECTED WM OPERATOR TRAINING SHIFT TO CONDUCT OF OPERATIONS
- PERMIT SPECIAL CONDITIONS AND FACILITY OPERATING LEVEL

Steps Towards Wastewater Permit

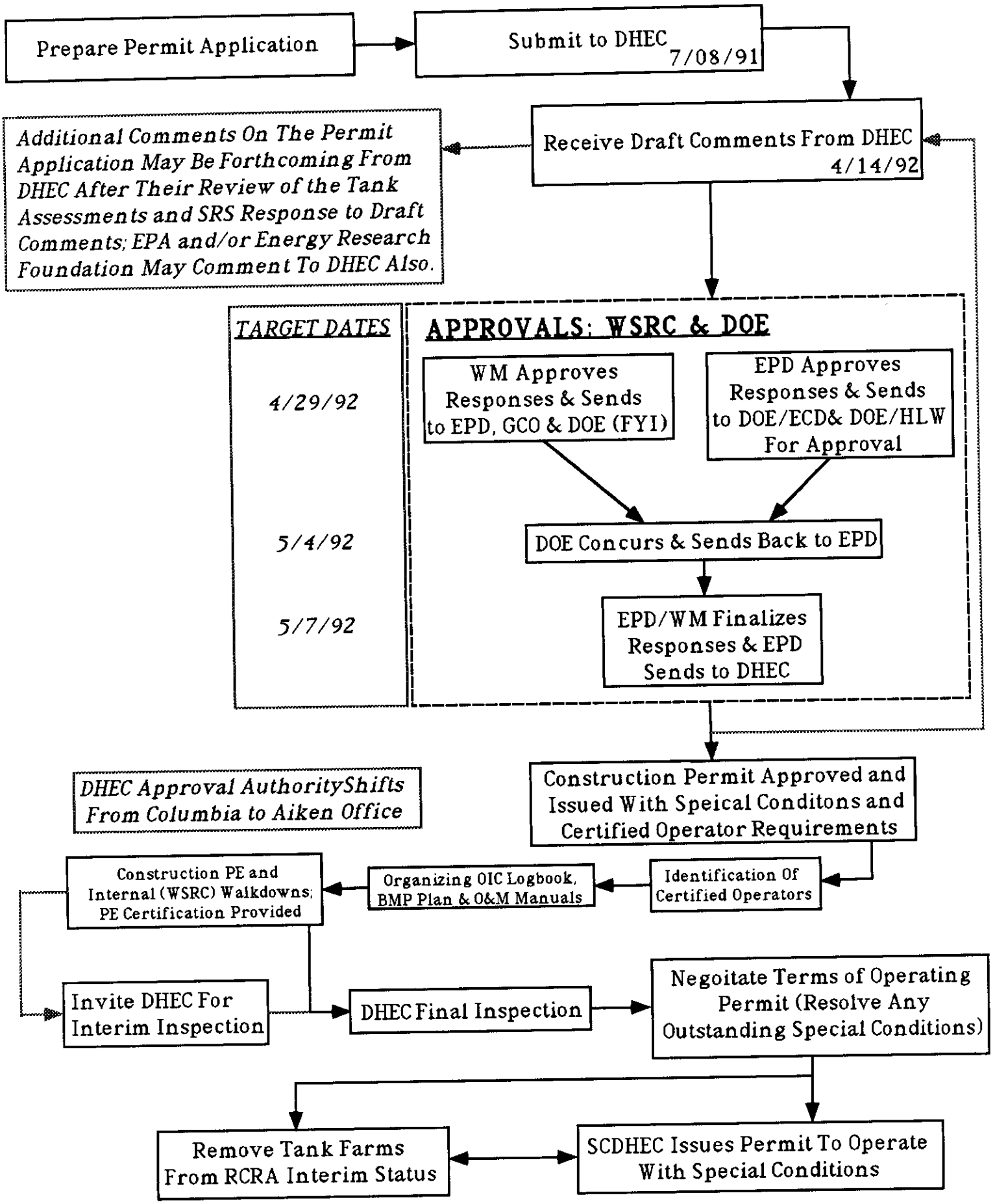

WASTEWATER PERMIT PROCESS FOR F / H TANK FARMS

7/8/91	SUBMIT CONSTRUCTION PERMIT APPLICATION PACKAGE	WSRC REQUESTED THAT ITP BE PERMITTED FIRST AND SEPARATELY; CLARIFICATION WITH SCDHEC ON THIS POINT IS NECESSARY
4/14/92	RECEIVE DRAFT SCDHEC COMMENTS	DRAFT COMMENTS ARE NOT ALL INCLUSIVE; ADDITIONAL COMMENTS MAY BE FORTHCOMING FROM DHEC AFTER THEIR REVIEW OF WSRC RESPONSE AND POSSIBLE INPUT FROM EPA AND / OR ENERGY RESEARCH FOUNDATION
TARGET DATES		
5/7/92	RESPOND TO SCDHEC COMMENTS	WM AND EPD TO AGREE ON COMMENT RESOLUTION; EPD/WM TO FORWARD RESOLUTION S TO DOE-ECD & HLWD FOR CONCURRENCE; EPD/WM TO FINALIZE RESPONSES AND EPD SUBMITS TO SCDHEC
	SCDHEC ISSUES CONSTRUCTION PERMIT	PERMIT WILL CONTAIN SPECIAL CONDITIONS AND CERTIFIED OPERATOR REQUIREMENTS; DHEC APPROVAL AUTHORITY SHIFTS FROM COLUMBIA OFFICE TO AIKEN DISTRICT OFFICE;
1-8 WEEKS	WSRC PREPARATION FOR SCDHEC FINAL INSPECTION	IDENTIFICATION OF CERTIFIED OPERATORS; ORGANIZATION OF O-I-C LOGBOOK, BMP PLAN & O & M MANUALS; CONSTRUCTION PE AND WM / EPD WALKDOWNS; PE CERTIFICATION PROVIDED; RESOLVE ANY CONCERNS AND / OR OUTSTANDING SPECIAL CONDITIONS
1 WEEK	SCDHEC FINAL INSPECTION / OPERATING PERMIT ISSUED	TANK FARMS REMOVED FROM INTERIM STATUS; COMPLY WITH SPECIAL CONDITIONS

F/H TANK FARMS WASTEWATER PERMITTING ISSUES

- PROFESSIONAL ENGINEER TO CERTIFY AS-BUILT STATUS (DO STATEMENTS IN PERMIT APPLICATION COVER US ON FTF, HTF, AND ITP?)
- ADDITIONAL (OFFICIAL?) SCDHEC COMMENTS FORTHCOMING UPON WSRC RESPONSE TO DRAFT COMMENTS AND POSSIBLE SCDHEC RECEIPT OF EPA AND ENERGY RESEARCH FOUNDATION COMMENTS ON TANK ASSESSMENTS
- NOT CLEAR WHETHER WSRC IS COMPLETELY COVERED UNDER LDR (5/8 LAND BAN) EVEN IF A WASTEWATER PERMIT IS IN PLACE
- WILL WM PROPOSAL ON CERTIFIED OPERATORS BE ACCEPTABLE TO SCDHEC
- DOE HAS DIRECTED WSRC TO SHIFT OPERATOR TRAINING FOCUS FROM WASTEWATER CERTIFICATION TO CONDUCT OF OPERATIONS

W-0517
T.R. File

WSRC-EPD Telecon Record

Subject Title : Wastewater Permitting ***Date:*** 4/24/92 ***Time:***

Purpose: To obtain status / clarify issues regarding permitting of the F/H Tank Farms

Call Made By: W. D. Dunaway, C. R. Hayes, R. L. Peterson, J. A. Arnett, B. L. Lewis, M. A. Hunter

Person(s) Contacted: L. E. Arrington CR Hayes

Discussion Notes:

Caller	Respondent
The SRS is planning to respond by letter to your review questions / comments on the Tank Farm Permit Application by 4/30.	Sounds good. Not much we can do until we see a response.
Are we still awaiting comments from EPA, SHWD, and ERF?	We are awaiting comments on the Tank Assessment Reports (not the permit application package) from these organizations. EPA is scheduled to respond by 5/1.
Is it ok to set up a conference call with EPA, SCDHEC, DOE, and WSRC to discuss EPA's comments?	I will ask EPA if this is ok.
Our feeling now is that SRS would like to receive a permit for the entire facility rather than for ITP separately.	We don't have a problem with this approach.
Have you thought about the operator certification level yet?	Looks like it will probably require an "A" Level.
It is our understanding that interim status will remain until the operating permit is issued. This is consistent with FFA language.	This will probably be the case then.
	If you would like, you may send us a list of concerns / questions and we will try and answer them

Additional Actions Needed:
SCDHEC to hear from EPA before proceeding with comments to SRS.
SRS to further discuss concerns / questions with SCDHEC.

Distribution:
L. S. Coward, 703-18A (PFSG-File)
W. D. Dunaway, 703-18A
M. Hawkins, 742-A
C. R. Hayes, 703-18A
M. A. Hunter, 703-H
J. V. Odum, 742-A
G. F. Stejskal, 742-A
P. D. D'Entremont, 703-H

F/H TANK FARMS WASTEWATER PERMITTING ISSUES

4/24 CONFERENCE CALL WITH SCDHEC - IWWD

LARRY ARRINGTON

LARRY TO TALK TO VICTOR

- SRS PLANS TO SUBMIT RESPONSE TO SCDHEC REVIEW COMMENTS ON 4/30 OK

COMMENTS ON ASSESSMENT REPORT COMING FROM EPA @ 4/30 OK FOR CONF. CALL WITH EPA, DHEC, SRS

(PERMIT APP.) NOT SHWD EPA WILL NOT EITHER

- POSSIBLE ADDITIONAL SCDHEC COMMENTS FORTHCOMING UPON SRS RESPONSE TO DRAFT COMMENTS AND STATUS OF ANTICIPATED SCDHEC RECEIPT OF EPA AND ENERGY RESEARCH FOUNDATION COMMENTS ON TANK ASSESSMENTS

- CLARIFY NEED FOR (ONE PERMIT FOR ALL FACILITIES) VS. ITP PERMITTED SEPARATELY AND FIRST

- MAKE SURE INTERIM STATUS WILL REMAIN UNTIL OPERATING PERMIT IS ISSUED (SPECIAL CONDITION OF PERMIT?) "MAY NOT NECESSARILY BE SO" "WILL VERIFY"

LOOKS LIKE "A" LEVEL NOW

LIST OF (THESE ISSUES) QUESTIONS TO LARRY

OSR 3-4A-W (Rev1-89)

W-0517

WESTINGHOUSE SAVANNAH RIVER COMPANY

INTER-OFFICE MEMORANDUM

ESH-FSG-92-0269

April 15, 1992

TO: M. A. HUNTER, 703-H

C R Hayes

FROM: C. R. HAYES, 703-18A
(X5-8838)

SCDHEC COMMENTS ON THE CONSTRUCTION PERMIT APPLICATION PACKAGE FOR THE F/H AREA HIGH LEVEL WASTE TANK FARMS (U)

Attached is a copy of SCDHEC review comments on the subject construction permit application package. Please note that Questions #5 and #11 do not require a response. SCDHEC is proposing to include these statements as special conditions of the construction permit. Please provide your response to these comments to me when complete.

Please contact me if there are any questions.

CRH:pr
Attachment

CC: w/ attachment
S. S. Cathey, 703-H
L. S. Coward, 703-18A
P. D. D'Entremont, 703-H
W. D. Dunaway, 703-18A
T. P. Gaughan, 241-120H
A. R. Gough, 742-A
R. W. Harral, 703-H
M. Hawkins, 742-A
B. L. Lewis, 703-H
J. V. Odum, 742-A
J. A. Pike, 703-H
I. K. Sullivan, 241-84H
K. Z. Wolf, 704-15S
G. T. Wright, 703-H
Central Files, 703-A
EPD Fileroom, 742-A

2

1. Page 3, why do the transfer line from the RBOF/RRF facilities begin at the security fence of the facility and not the basin and building?
2. Has the integrity of the interarea transfer lines been verified?
3. Certifications do not appear to cover all components of the system. For example, only the H-Area Diversion Box #8 is certified, however, there are eight diversion boxes in this area.
4. Page 23, Why is SRS including the waste transfer lines to/from tank 16 in the submittal when tank 16 was removed from service in 1972.

SP. COND.

5. No chemicals (process or otherwise) shall be added to the waste tanks which will alter the composition of the F/H ETF effluent from that which was evaluated for the NPDES permit.
6. Page 44, can we accept the addition of new piping (not replacement) and chemical feed systems as normal operation, not requiring dept approval? This might be ok if all piping and/or feed systems are within the tank farm boundary and do not add to or influence outside streams such as those going to F/H ETF.
7. Page 54, the evaporator overheads pass by a gamma monitor which measures the radioactivity level. The monitor is used to determine the radioactivity level and subsequent flow path. It is stated that these monitors have not functioned reliably and may be removed from service. Are these monitors the source of gamma analysis done in the overheads hold tanks? Since they are not reliable and/or may be removed from service, how is the radioactive quality of this wastewater, which eventually flows to F/H ETF and outfall H-16, monitored?
8. Page 54, the cesium decontamination process is used only when the Cs-137 content of the overheads is too high to send directly to the F/H ETF. How is the Cs-137 content determined if the gamma monitors are not reliable and/or removed. There does not appear to be an option, based on the drawings, to send the wastewater that does not meet the Cs-137 requirements back through the CRCs from the overheads hold tank. What criteria determines if the Cs-137 concentration is to high to send to F/H ETF?
9. Page 75, The CRC and pump tank ar being eliminated from the replacement evaporator system. Will the demisters be the only means of removing cesium in this system. Is removal of the CRCs anticipated for all evaporator systems. If so, has the demisters proven there ability to replace the CRCs in radionuclide removal?
10. Page 77, is the radiation monitor which is located in the mercury removal tank of the replacement evaporator system and which functions to activate the interlocked diversion valve system the same as those monitors which were indicated on page 54 to be unreliable. If not, is this monitor considered and proven reliable? If the monitor is the same type, wouldn't a more reliable monitor be preferred?

SP. COND.

11. Page 107, This office should be notified of any emergency discharge that occurs during the chemical runs.

12. Page 105-7, following completion of the chemical runs, what chemicals will be used during wet lay-up and where will they be discharged.
13. Page 128, why is tank 13 used on a continuous bases (HHW evaporator feed tank) when is has one or more documented cracks?
14. SCDHEC construction permit #13,105 approved the transfer line to the F/H ETF which the f/h high level tank farm will tie into, at the F/H ETF force main valve pit. The approved transfer lines are HDPE pipe. Is the wastewater from the evaporators compatible with these lines?
15. Page 170-184, the diversion box layouts have some nozzles labeled as spare, is there piping associated with the spare nozzles? If so, where does it lead? Also, these layouts indicate nozzles "abandoned or capped," emphasis on or. How are the spare and abandoned nozzles physically protected against accidental use.
16. Is there groundwater monitoring for the high level tank farms? If so, the extent of monitoring and results to date should be submitted to this office. (Based on Department evaluation, monitoring or additional monitoring may be required.) SP Cont.
17. Do the high level tank farms have stormwater runoff control? If so, please describe the control measures currently in place.
18. This office is concerned by the statement that secondary containment for replacement items is not required for items that match the description in the permit. We would like the option to require secondary containment on items, now or at a post permit date, that fail or have the potential to fail and whose failure could impact the environment.
19. Is there soil contamination, resulting from the radiation component of the wastewater, around the pipes transferring the wastewater to and through out the High Level Tank Farm system? If so, is there any plans to remove or remediate this soil?> Is there any potential for contaminated soils, or components thereof, to leach into groundwater?

These comments/questions do not represent our review of the Phase I and II Assessment Reports. Based on the response to the above questions/comments, additional questions may be forthcoming.

F/H TANK FARMS W-0517

INTER-OFFICE MEMORANDUM
Savannah River Site

Date: 15-Apr-1992 08:25am EDT
From: Matthew A. Hunter
HUNTER-MA-L2335 AT A1 AT SASRS2
Dept: WMT
Tel No: x7-1447

TO: See Below

Subject: Meeting Minutes for Wastewater Permit Action Meeting

On 4/10/92, a meeting was held to discuss actions that require completion to assure compliance with wastewater operating regulations. The meeting was held due to the new timetable for receiving the wastewater permit. WM needs to be confident in their compliance status and that the tank farms will be in sync with the fast track schedule. The items discussed are listed below. A more detailed hard copy of the matrix used to discuss these items is available through me.

- The present and continued operation of the tank farms within the process descriptions found in the permit application.
- The construction and certification of the RHLWE.
- Submittal of the annual tank inspection report.
- Maintenance of a daily log notebook.
- Designating and/or obtaining and Operator in Charge.
- Maintenance of an O & M manual.
- Maintaining a BMP Plan.
- Operator Training including:
  - All operators D level or better
  - 12 hours continuing education/two years
  - Annual renewal of wastewater certificates
  - Status report to EPD on operators
- Daily inspections by certified operator.

Clarification on a number of subjects is needed and I will be resolving these questions. Other topics discussed pertained to FFA and Tank Assessment reports. On 4/14 WM received informal comments on the permit application. A response date has not been settled on.

Distribution:

TO:	* attended meeting	(PAPER MAIL AT A1 AT SASRS2)
TO:	Bharat R. Damani*	(DAMANI-BR-Y4387 @A1@SLSRP1)
TO:	W. DANNY DUNAWAY	(DUNAWAY-WD-O7436 @A1@SLSRP1)
TO:	Charles R. Hayes	(HAYES-CR-Z9722 @A1@SLSRP1)
TO:	Randolph K. Larsen, III*	(LARSEN-RK-L2336 AT A1 AT SASRS2)

2

TO:	PAUL D. D'ENTREMONT	(D'ENTREMONT-PD-O5438 AT A1 AT SASRS2)
TO:	Jeff Pike	(PIKE-JA-Y5547 AT A1 AT SASRS2)
TO:	TIMOTHY P. GAUGHAN*	(GAUGHAN-TP-O8815 AT A1 AT SASRS2)
TO:	L.H. Aiken	(AIKEN-LH-O5403 AT A1 AT SASRS2)
TO:	William H. Fulton*	(FULTON-WH-Y6150 AT A1 AT SASRS2)
TO:	Kathy Z. Wolf*	(WOLF-KZ-O9884 AT A1 AT SASRS2)
TO:	WALTER A. WILSON	(WILSON-WA-O5215 @A1@SLSRP1)
TO:	Barbara J. Clark	(CLARK-BJ-L2439 AT A1 AT SASRS2)
TO:	Brenda L. Lewis*	(LEWIS-BL-O6503 AT A1 AT SASRS2)
TO:	V.G. Dickert*	(DICKERT-VG-O4857 AT A1 AT SASRS2)
TO:	Robert W. Wilson*	(WILSON-RW-T4847 AT A1 AT SASRS2)
TO:	Richard W. Harral	(HARRAL-RW-O9439 AT A1 AT SASRS2)
TO:	SUSAN S. CATHEY	(CATHEY-SS-O4949 AT A1 AT SASRS2)
TO:	Ginny Ellis	(ELLIS-VE-W0928 AT A1 AT SASRS2)
CC:	Cynthia Blair-McManus	(BLAIR_MCMANUS-C-B8534 @A1@SASRS3)
CC:	Carroll McFall	(MCFALL-NC-B7643 AT A1 AT SASRS2)
C:	David T. O'Rear	(OREAR-DT-O4792 AT A1 AT SASRS2)

W-0517

DHEC

Department of Health and Environmental Control
2600 Bull Street Columbia SC 29201

FAX TRANSMISSION

Promoting Health Protecting the Environment

JEFF PIKE
7-8091

PAGES FAXED (this sheet included) 2

TO: Chuck Hayes
Name of Individual

Westinghouse - SRC
Organization/Company

P.O. Box 616
Mailing Address

Aiken
City

SC
State

29803
Zip Code

725-4676
TELEFAX NUMBER

( )
Office Pr

L. Arrington
Name of Individual

WPC / Ind Wus
Bureau/Division/Section

TELEFAX NUMBER

COMMENTS: M/H HLTI comments

Faxed By: [illegible] Desk Phone:

1. Page 3, why do the transfer lines from the RBOF/RRF facilities begin at the security fence of the facility and not the basin and building?
2. Has the integrity of the interarea transfer lines been verified?
3. Certifications do not appear to cover all components of the system. For example, only the H-Area Diversion Box #8 is certified, however, there are eight diversion boxes in this area.
4. Page 23, Why is SRS including the waste transfer lines to/from tank 16 in the submittal when tank 16 was removed from service in 1972.
5. SP. COND. No chemicals (process or otherwise) shall be added to the waste tanks which will alter the composition of the F/H ETF effluent from that which was evaluated for the NPDES permit.
6. Page 44, can we accept the addition of new piping (not replacement) and chemical feed systems as normal operation, not requiring dept approval? This might be ok if all piping and/or feed systems are within the tank farm boundary and do not add to or influence outside streams such as those going to F/H ETF.
7. Page 54, the evaporator overheads pass by a gamma monitor [illegible] measures the radioactivity level. The monitor is used to determine the radioactivity level and subsequent flow path. It is stated that these monitors have not functioned reliably and may be removed from service. Are these monitors the source of gamma analysis done in the overheads hold tanks? Since they are not reliable and/or may be removed from service, how is the radioactive quality of this wastewater, which eventually flows to F/H ETF and outfall H-16, monitored?
8. Page 5[illegible] the cesium decontamination process is used only when the Cs-137 content of the overheads is too high to send directly to the F/H ETF. How is the Cs-137 content determined if the gamma monitors are not reliable and/or removed. There does not appear to be an option, based on the drawings, to send the wastewater that does not meet the Cs-137 requirements back through the CRCs from the overheads hold tank. What criteria determines if the Cs-137 concentration is to high to send to F/H ETF?
9. Page 75, The CRC and pump tank ar being eliminated from the replacement evaporator system. Will the demisters be the only means of removing cesium in this system. Is removal of the CRCs anticipated for all evaporator systems. If so, has the demisters proven there ability to replace the CRCs in radionuclide removal?
10. Page 77, is the radiation monitor which is located in the mercury removal tank of the replacement evaporator system and which functions to activate the interlocked diversion valve system the same as those monitors which were indicated on page 54 to be unreliable. If not, is this monitor considered and proven reliable? If the monitor is the same type, wouldn't a more reliable monitor be preferred?
11. SP. COND. Page 107, This office should be notified of any emergency discharge that occurs during the chemical runs.

12. P[illegible]-7, following completion of the chemical runs, what che[illegible]s will be used during wet lay-up and where will they be discharged.
13. Page 128, why is tank 13 used on a continuous bases (HHW evaporator feed tank) when is has one or more documented cracks?
14. SCDHEC construction permit #13,105 approved the transfer line to the F/H ETF which the f/h high level tank farm will tie into, at the F/H ETF force main valve pit. The approved transfer lines are HDPE pipe. Is the wastewater from the evaporators compatible with these lines?
15. Page 170-184, the diversion box layouts have some nozzles labeled as spare, is there piping associated with the spare nozzles? If so, where does it lead? Also, these layouts indicate nozzles "abandoned or capped," emphasis on or. How are the spare and abandoned nozzles physically protected against accidental use.
16. Is there groundwater monitoring for the high level tank farms? If so, the extent of monitoring and results to date should be submitted to this office. (Based on Department evaluation, monitoring or additional monitoring may be required.) SP COND.
17. Do [illegible] high level tank farms have stormwater runoff cont[illegible] If [illegible] please describe the control measures currently in place.
18. This office is concerned by the statement that secondary containment for replacement items is not required for items that match the description in the permit. We would like the option to require secondary containment on items, now or at a post permit date, that fail or have the potential to fail and [illegible] failure could impact the environment.
19. Is [illegible] soil contamination, resulting from the radiation component of the wastewater, around the pipes transferring the wastewater to and through out the High Level Tank Farm system? If so, is there any plans to remove or remediate this soil? Is there any potential for contaminated soils, or components thereof, to leach into groundwater?

These comments/questions do not represent our review of the Phase I and II Assessment Reports. Based on the response to the above questions/comments, additional questions may be forthcoming.

W-0517

DON'T SAY IT-WRITE IT

April 13, 1992

To: J. M. Price, 992W-2

L.A. Huber

From: L. A. Huber, 773-42A

EPD REVIEW OF WSRC-TA-91-00005-4 (U)

Reference: Memorandum, ESH & QA Review of WSRC-TA-91-00005-4 (U), J.M. Price to G.W. Earle, et.al., April 7, 1992

As requested in the referenced memorandum, the approval copy of the "Temporary Exceedance of Waste Tank Farms Technical Standard DPSTS-241-1.01-3 for Tanks 5, 7, 8, and 11" has been reviewed. Discussion on the RCRA Interim Status requirements for removal of waste in the event of a release have been adequately addressed. Discussions on the environmental permit requirements continue to be vague and poorly defined. I have confirmed with EPD/ER that per the current understanding between SCDHEC and SRS, this activity would not be construed as initiation of tank closure. It is assumed that WM has consulted the Permitting Field Support group in determining that the pump installation would not require notification under or modification to the proposed Waste Water Treatment permit. Activities performed under the TA should not result in significant environmental impacts under these assumptions; therefore, it is recommended that the TA receive ESH &QA approval.

cc: D.E. Gordon, 742-A
C.A. Amacher, 742-A
C.R. Hayes, 703-18A
R.E. Nordstrom, 241-102F
C.B. Stevens, 703-H
NEPA Files

W-0517
T.R. FILE

WSRC-EPD Telecon Record

Subject Title: Wastewater Permitting **Date:** 4/10/92 **Time:**

Purpose: To obtain status of SCDHEC review of F/H Tank Farms Construction Permit Application Package

Call Made By: C. R. Hayes CR Hayes

Person(s) Contacted: L. E. Arrington

Discussion Notes:

Caller	Respondent
What is latest status of your review of Tank Farms Permit Application Package?	Originally had approximately 40 questions / comments. Through additional review, have cut that number to around 15. A couple of these are proposed as special conditions and will not require a response. Carl and myself would like to send comments to SRS on Monday (4/13) if this strategy is ok with Marion Sadler. However SCDHEC does not intend on issuing a construction permit until EPA and ERF (Energy Research Foundation) comments on FFA/ Tank Assessments are addressed.

Additional Actions Needed:
SCDHEC to issue comments on Monday (4/13) if ok with Sadler

Distribution:
L. S. Coward, 703-18A (PFSG-File)
W. D. Dunaway, 703-18A
M. Hawkins, 742-A
C. R. Hayes, 703-18A
M. A. Hunter, 703-H
J. V. Odum, 742-A
G. F. Stejskal, 742-A
P. D. D'Entremont, 703-H

W-0517
W-0073

Westinghouse
Savannah River Company

P.O. Box 616
Aiken, SC 29802

ESH-FSG-92-0200

April 6, 1992

Mr. M. F. Sadler, Director
Industrial and Agricultural Wastewater Division
South Carolina Department of Health
and Environmental Control
2600 Bull Street
Columbia, South Carolina 29201

Dear Mr. Sadler:

TRANSFER OF TRITIATED K-REACTOR WASTEWATER TO WASTE TANK 17 (U)

Ref: Telephone conversation, Hayes to Arrington, 1/16/92

Please accept this letter as follow-up to the referenced telephone conversation. Between 1/17/92 and 2/12/92, approximately 120,000 gallons of nonhazardous tritiated (i.e., 5950 total curies) reactor wastewater was transferred via tanker trucks from the 106 Reactor buildings to Tank 17 in the F-Area Tank Farm. The tritium in the water resulted from drainage of heat exchangers being replaced in the K-Reactor, and from washwater used to clean building sumps.

The wastewater will be used as make-up water to remove salt from the waste tanks and will be processed through the In-Tank Precipitation Facility before eventual disposal in the Z-Area Saltstone vaults. Officials from EPA Region IV, SCDHEC-Lower Savannah District and the SCDHEC-Bureau of Solid and Hazardous Waste were also notified prior to the transfer.

The Savannah River Site appreciates your staff's cooperation in this matter. Should there be any questions, please contact C. R. Hayes (725-8838).

Yours very truly,

J. V. Odum, Manager
Facility Support Section
Environmental Protection Department

CRH:pr

CC: L. E. Arrington, SCDHEC
A. Coffey, SCDHEC
K. LePierre', EPA Region IV
M. C. Reece, SCDHEC, Lower Savannah District
S. R. Wright, 703-41A (2) Concur

BCC:

S. S. Cathey, 703-H
L. S. Coward, 703-18A
P. D. D'Entremont, 703-H
M. D. Dukes, 742-A
W. D. Dunaway, 703-18A
A. R. Gough, 742-A
M. Hawkins, 742-A
C. R. Hayes, 703-18A
G. S. Hoover, 703-41A
C. E. Jewell, 703-8C
B. L. Lewis, 703-H
J. V. Odum, 742-A
W. L. Payne, 742-A
J. R. Shaffer, 703-41A
C. B. Stevens, 703-H
K. S. Wierzbicki, 703-H
K. Z. Wolf, 704-15S
G. T. Wright, 703-H
Central Files, 703-A
EPD Fileroom, 742-A

F|H TANK FARM FILE

INTER-OFFICE MEMORANDUM
Savannah River Site

Date: 30-Mar-1992 07:51am EST
From: Jill G. Suhm
SUHM-JG-T7584 AT A1 AT SLTNOA
Dept: TOS
Tel No: 56381

TO: TIMOTHY P. GAUGHAN (GAUGHAN-TP-O8815 @A1@SASRS2)

CC: Charles R. Hayes (HAYES-CR-Z9722 @A1@SLSRP1)
CC: MONTE HAWKINS (HAWKINS-M-O6779 @A1@SLSRP1)

Subject: ITP Sump Contents

Tim,

As we discussed, spills or leaks from ITP process vessels, lines, flanges, etc. during ITP cold runs may be pumped from the ITP sump to the ITP feed tank for subsequent transfer to Tank 48. Chuck Hayes has confirmed that this information is contained in the Phase I Tank Assessment Report.

Spills of hazardous chemicals other than in-process materials (such as benzene being stored in a drum) should be pumped from the sump into a container and managed as hazardous waste.

If you need any additional guidance, please don't hesitate to call either Monte (5-1818) or myself (5-1793).

W-0517

INTER-OFFICE MEMORANDUM
Savannah River Site

Date: 30-Mar-1992 12:40pm EST
From: Charles R. Hayes
HAYES-CR-Z9722
Dept: EPD
Tel No: X58838

TO: See Below

Subject: REVIEW STATUS OF TANK FARM / ITP PERMIT APPLICATION (U)

SCDHEC IS NOT CLEAR AT THIS TIME AS TO WHAT DOCUMENTS ARE BEING REVIEWED BY EPA. A CALL WILL BE MADE TO EPA (BY DHEC) IN THE NEXT COUPLE OF DAYS TO CLARIFY THIS POINT. CURRENTLY, SCDHEC'S POSITION IS AS FOLLOWS:

1) IF EPA IS ONLY REVIEWING / COMMENTING ON TANK ASSESSMENT, THEN SCDHEC CAN SEND US THEIR COMMENTS AS SOON AS THEIR REVIEW OF THE TANK ASSESSMENT (PHASE II) IS COMPLETE.

2) IF EPA IS REVIEWING / COMMENTING ON THE PERMIT APPLICATION, THEN SCDHEC WILL GIVE THEM A COUPLE OF WEEKS TO RESPOND. IF EPA HASN'T RESPONDED WITHIN A COUPLE OF WEEKS, THEN SCDHEC WILL SEND US THEIR COMMENTS ANYWAY.

ALSO, SCDHEC HAS AGAIN STATED THAT IT IS ACCEPTABLE TO THEM TO PULL OUT THE ITP PORTION OF THE SCOPE AND PERMIT IT SEPARATELY.

IF THERE ARE ANY QUESTIONS, PLEASE CONTACT ME.

Distribution:

TO:	TIMOTHY P. GAUGHAN	(GAUGHAN-TP-08815 @A1@SASRS2)
CC:	Lori S. Coward	(COWARD-LS-Z6459)
CC:	W. DANNY DUNAWAY	(DUNAWAY-WD-07436)
CC:	MONTE HAWKINS	(HAWKINS-M-06779)
CC:	J. V. ODUM	(ODUM-JV-04184)
CC:	Bill Van Pelt	(VANPELT-WB-07016 @A1@SASRS2)
CC:	Jeff Pike	(PIKE-JA-Y5547 @A1@SASRS2)

OSR 3-4A-W (Rev1-89)

WESTINGHOUSE SAVANNAH RIVER COMPANY

INTER-OFFICE MEMORANDUM

WER-WMT-920253

March 18, 1992

To:

G. T. Wright, 703-H
T. M. Osborne, 703-H
P. H. Stevens, 707-H
J. J. Scherpenberg, 707-H
H. A. Abodishish, 707-H
L. H. Aiken, 707-H
J. S. Ledbetter, 707-H
S. S. Cathey, 703-H
V. G. Dickert, 703-F
R. W. Wilson, 703-H
C. J. Baker, 241-120H
R. C. Miller, 241-120H
A. S. Greer, 241-102H
W. A. Wilson, 703-H
R. W. Harral, 703-H
R. A. Scaggs, 703-H
B. L. Lewis, 703-H
F. G. McNatt, 704-8H
M. C. Chandler, 703-H
P. D. d'Entremont, 703-H
M. A. Ceravolo, 703-H
W. B. Van Pelt, 241-121H
T. P. Gaughan, 241-120H
K. S. Wierzbicki, 703-H
C. B. Stevens, 703-H
M. A. Hunter, 703-H
W. H. Martin, 703-H

From: J. A. Pike, 703-H, 7-8843

Jeff Pike

Summary of Actions Resulting from the Tank Farm Wastewater Permit Application and Federal Facilities Agreement (FFA) (U)

For your information the attached two lists summarizes the document requirements and commitments for the tank farms as a wastewater permitted facility including the commitments contained in the draft Federal Facilities Agreement (FFA).

Both summaries were created from information in the FFA, Tank Farm Tank Phase I and Phase II Tank Assessment Reports, wastewater permit application, site experience with other wastewater permits, and normal operating practices for wastewater treatment facilities.

If a tank system does not have secondary containment as defined in the FFA (indicated with a designation of NO on the assessment report summary), the FFA requires removal from service or provide it with adequate containment. The process outlined in the FFA requires DOE to submit a schedule to be approved by SCDHEC within 90 days of SCDHEC notifying DOE which tanks do not meet the containment requirements. The FFA also provides for modifications to the schedule and an annual status report. SCDHEC will determine which tanks do not have secondary containment based on the tank assessment reports submitted with the wastewater permit application.

The tank assessment report summary shows no significant surprises. All systems that are categorized without secondary containment are already scheduled for removal from service except the 242-F Evaporator overheads system. The essence of the assessment postpones the integrity examination of this system to a time prior to restart of this facility because a leak test would not be completed until the evaporator is approved for restart.

During the performance of the assessment, the C. T. Main Engineer discovered two transfer lines embedded in concrete of the ITP filter building that do not meet secondary containment requirements. In order to resolve the problem and avoid replacement of the lines, the lines were categorized as above ground ancillary equipment under terms of the FFA. Therefore, daily inspection of these lines would normally be required. However, these lines are not visually inspectable. With consideration from the facility manager and DOE, an alternative inspection method was proposed and accepted by the assessing engineer. SCDHEC will still have the final approval for acceptability, but the proposal is generally believed to be reasonable.

In addition, note that Tank 13 is allowed to operate as long as it is not leaking. 299-H is treated as a waste generating facility and not a waste processing facility. Therefore, 299-H is not "permitted" as a waste processor and falls outside the scope of the wastewater permit and FFA. BGI wastes, mainly rain water infiltration, is a permitted influent to the Tank Farms and would still be allowed to be sent to the Tank Farm via 299-H.

2

CC: S. E. Crook, BTC-103
K. Z. Wolf, 704-S
W. D. Dunaway, 703-18A
C. R. Hayes, 703-18A
R. D. Kowalski, MDC-112
C. Blair-McManus, 703-H
WMT Files, 703-H
File Code: 175.15

Summary of FFA Secondary Containment Tank Assessment Reports for the Tank Farms

Tank System	Phase II Tank Assessment Report Section	Secondary Containment	Notes
Type I Tanks #2-8	3.1	ED	ED to be requested from SCDHEC per FFA.
Type I Tanks #1, 9-12	3.1	NO	
Type II Tanks	3.2	NO	
Type III/IIIA Tanks	3.3	SC	
Type IV Tanks	3.4	NO	
242-H Evaporator Pot	3.5	SC	
242-H Evaporator Overheads Area			Process lines in overheads area requires daily inspection for leaks inorder to satisfy FFA requirements as AG thereby exempting the facility to SC requirements. The RHLWE will replace facilities that do not meet the SC requirements.
Tanks in overheads area		NO	
Process piping		AG	
242-H CRC		SC	
242-H CRC Transfer Lines		NO	
242-16H Evaporator Pot	3.5	SC	
242-16H Evaporator Overheads Area		NO	Hole in berm has been corrected. Submit modification assessment as part of annual package.
242-16H CRC		SC	
242-16H CRC Transfer Lines		SC	
242-F Evaporator Pot	3.5	SC	
242-F Evaporator Overheads Area		NO	DOE/WSRC to determine options to provide SC and/or reclassify parts as AG prior to restart.
242-F Overheads Diverting System		NO	
242-F CRC		SC	
242-F CRC Transfer Lines		NO	
242-16F Evaporator Pot	3.5	SC	
242-16F Evaporator Overheads Area		SC	
242-16F CRC		SC	
242-16F CRC Transfer Lines		SC	
Pump Pits	3.6		
1H-10H, 1F-3F, LPP, and APP		SC	
Waste Transfer Piping	3.7		
Pipe Type I (Concrete Trench)		SC	
Pipe Type II (SS line in CS Jacket)		SC	
Pipe Type IIA (CS line in CS Jacket)		SC	
Pipe Type III (SS line in Cement Jacket)		SC	
Pipe Type IIIA (CS line in Cement Jacket)			This type does not exist in Tank Farm.
Pipe Type IV (SS line in SS Jacket)		SC	

Summary of FFA Secondary Containment Tank Assessment Reports for the Tank Farms

Tank System	Phase II Tank Assessment Report Section	Secondary Containment	Notes
Diversion Boxes	3.8		
FDB1		SC	As long as gravity drain line exists and is maintained.
HDB1 and HDB3		SC	As long as liquid removal equipment can remove waste before leaching through the concrete.
HDB2		SC	C. T. Main recommends that the liner be monitored to assure integrity is maintained. No specific action suggested.
All Other Diversion Boxes		SC	
ITP Facilities	Phase I Report		
Filter Building		SC	
Embedded Filtrate Lines		AG	Periodic leak check and radiation survey on outside walls daily once operational.
Hold Tank Area		SC	As long as liner extension completed as described.
Stripper Column Area		SC	

NO	Does not meet the requirements for SC
SC	Secondary Containment
ED	Equivalent Device (requires SCDHEC approval)
AG	Above Ground Lines/daily inspections

Wastewater Permit and FFA Operational Requirements (July 30, 1991)

Requirement	Classification	Due Date	Frequency	Administrative Control	Responsible WM Group
Wastewater Permit:					
Operate within description presented in application.	O		Continuous	ECC	WMT/TF Support & Oversight
Any process change that would change the description given in the wastewater permit application requires SCDHEC approval prior to construction.	P	Prior to construction	Continuous	ECC	WMT/TF Support & Oversight/Environmental & Regulatory Support
Submit an application to modify the existing ETF Process Sewer to 242-25H Evaporator.	P	Prior to construction	Once	TBD	WMPC&I
Provide construction certification statement for 242-25H when constructed.	P	Prior to Operation	Once	TBD	WMPC&I
Submit an annual tank inspection report by July 1 each year for all tank systems not meeting secondary containment requirements.	R	'July 1	Annually	TBD	WMT/Surveillance & Monitoring
Provide secondary containment for all tank systems or components installed or replaced.	O		Continuous	ECC	WMT/TF Support & Oversight
Operator In Charge - one operator of level determined by SCDHEC available per shift.	O/T		Continuous	Manual 3Q, Procedure 20.1, Section 4.1	WMO/Support Activities
All operators at least D level or in training.	O/T		Continuous	Manual 3Q, Procedure 20.1, Section 5.1	WMO/Support Activities
12 hours continuing education every two years. (Coordinated through training Dept.)	T		Continuous	Manual 3Q, Procedure 20.1, Section 5.6	WMO/Support Activities
Maintain daily log in bound notebook. (Runbooks are not adequate.)	O/F		Continuous	Manual 3Q, Procedure 20.1, Section 5.3	WMO

Requirement	Classification	Due Date	Frequency	Administrative Control	Responsible WM Group
Annual renewal of wastewater certificates (includes report on hours of continuing education - coordinated with training dept).	T		Annually	Manual 3Q, Procedure 20.1, Section 4.2	WMO/Support Activities
Report to EPD on status of operators working at facility. This is a WSRC requirement only.	F		Semi-annually	TBD	WMO/Support Activities
Report violations of permit to SCDHEC	R		As Needed	SIRIM	EPD ?
Maintain a complete Operations and Maintenance Manual for the waste treatment plant. (See ETF's manual as an example.)	F		Continuous	TBD	WMO/Procedures
Perform daily inspections by a certified operator of the appropriate grade. Records of the inspections need to be stored in a way to allow on site inspection. (Run book procedures are adequate.)	O/F		Continuous	By Procedure	WMO
Maintain a Best Management Practices (BMP) Plan to identify and control the discharge of significant amounts of oils and the hazardous and toxic substances. The plan shall be developed within 6 months of final permit issuance and implemented within 12 months. Existing site BMP Plan covers the tank farms.	O/F	Developed within 6 months of permit	Continuous	TBD	EPD & WMT/Environmental & Regulatory Support
ITP Tank Assessment Report:					
Installation of liner extension in Hold Tank Area.	O	Prior to startup	Once	ITP Startup Schedule	WMO
Leak test filtrate lines embedded in concrete once per ITP operating cycle.	O	Once per ITP cycle	Continuous	By Procedure	WMO
Daily radiation surveys of exterior concrete wall of filtrate cells.	O	Daily	Continuous	By Procedure	WMO

Requirement	Classification	Due Date	Frequency	Administrative Control	Responsible WM Group
Tank Farm Tank Assessment Report:					
Provide integrity assessment (leak check) of 242-H Evaporator overheads facilities prior to restart.	R	Prior to restart	Once (submit report with annual assements)	242-H Restart Procedure	WMO/Evaporator Restart
Provide integrity assessment of 242-F Evaporator overheads facilities prior to restart.	R	Prior to restart	Once (submit report with annual assements)	242-F Restart Procedure	WMO
Annual Tank Inspection Report by July 1 each year.	R	'July 1	Annually	TBD	WMT/Surveillance & Monitoring
Create daily inspection procedure for all above ground 242-H Evaporator overheads ancillary process equipment in order to satisfy FFA requirements for above ground facilities.	O	Prior to restart	Continuous	By Procedure	WMO
Repair breach in 242-16H Evaporator overheads cell liner.	O	completed	Once	completed	completed
File report on 242-16H Evaporator overheads cell liner repair to be submitted with annual assessment package.	R	Within 60 days of anniversary of FFA	Once (submit report with annual assements)	TBD	WMT/Environmental & Regulatory Support
Federal Facilities Agreement:					
Submit wastewater permit application to SCDHEC and EPA.	P	Jun 30, 1991	Once	Completed	Completed
Remove tank farm facilities from site RCRA Part A permit after final wastewater permit is issued.	P	After final permit is issued	Once	TBD	EPD & WMT/Environmental & Regulatory Support

Requirement	Classification	Due Date	Frequency	Administrative Control	Responsible WM Group
Submit a schedule for removal from service or repair all components that do not meet secondary containment standards.	R	With in 90 days of signing FFA	Once	TBD	WMOP
Submit to SCDHEC and EPA for approval a PE Certified secondary containment/integrity assessment for all wastewater permited facilities.	R	With permit application	Once	N/A	WMT/TF Support & Oversight
Submit to SCDHEC (and EPA?) for approval a PE Certified secondary containment assessments for modified or replaced tank.	R	Prior to installation	Continuous	ECC	WMT/Environmental & Regulatory Support
Submit to SCDHEC (and EPA?) for approval a PE Certified secondary containment assessment for modifying or replacing ancillary equipment and for modifications that changes secondary containment or structural integrity. These assessments are accumulated during the year and submit annually.	R	Within 60 days of anniversary of FFA	Annually	ECC	WMT/Environmental & Regulatory Support
Status of tanks being removed from service.	R	TBD	Annually	TBD	WMOP
Report on condition of tanks (proposed to send Inspection group annual report).	R	'July 1	Annually	TBD	WMT/Surveillance & Monitoring
Requests for schedule changes to the schedule to remove or repair tank systems that do not meet secondary containment standards.	R		As Needed	TBD	WMOP
For new leaks: 1. remove waste from tank ASAP, 2. remove waste from secondary containment, and 3. repair tank or put it on schedule for removal from service.	O		Continuous	By Procedure	WMO
Report on leaks and any environmental releases.	R		As Needed	SIRIM	EPD

Requirement	Classification	Due Date	Frequency	Administrative Control	Responsible WM Group

The FFA Appendix B lists the following tank systems:

242-F Evaporator Pot, Mercury Collection Tank, Cesium Removal Column Pump Tank, Overheads Tank-North, Overheads Tank-South, Overheads Diverting Tank;
242-16F Evaporator Pot, Mercury Collection Tank, Cesium Removal Column Pump Tank, Overheads Tank-North, Overheads Tank-South;
242-H Evaporator Pot, Mercury Collection Tank, Cesium Removal Column Pump Tank, Overheads Tank-4, Overheads Tank-5;
242-16F Evaporator Pot, Mercury Collection Tank, Cesium Removal Column Pump Tank, Overheads Tank-1, Overheads Tank-2;
F-Area Concentrate Transfer System Pump Tank;
F Pump Tank #1, F Pump Tank #2, F Pump Tank #3;
H-Area Concentrate Transfer System Pump Tank;
H Pump Tank #1, H Pump Tank #2, H Pump Tank #3, H Pump Tank #4, H Pump Tank #5, H Pump Tank #6, H Pump Tank #7, H Pump Tank #8, H Pump Tank #9, H Pump Tank #10;
In-Tank Precipitation Filtrate Hold Tank #1, In-Tank Precipitation Filtrate Hold Tank #2.

Abbreviations:

F - Maintain in files for inspections/audits
O - Operational requirement
T - Training requirement
R - Reporting requirement
P - Permitting requirement/requires permit modification
ECC - Environmental Compliance Checklist

TBD - To be determined

OSR 3-4A-W (Rev1-89)

W-0517

WESTINGHOUSE SAVANNAH RIVER COMPANY

INTER-OFFICE MEMORANDUM

WER-WMT-920248

March 18, 1992

To: C. R. Hayes, 703-18A

Jeff Pike

From: J. A. Pike 703-H

F and H Area Tank Farm Wastewater Permit Application: Phase II Tank Assessment Report

Attached are eight copies of the Assessment Report Phase II for the F and H-Area High-Level Radioactive Waste Tank Farms (U), Rev. 0, 8/20/91. Please transmit the application package to SCDHEC and EPA per the Federal Facility Agreement.

If there are any questions, please contact Jeff Pike at 7-8843 or Matt Hunter at 7-1447.

CC: B. L. Lewis, 703-H
M. C. Chandler, 703-H
P. D. d'Entremont, 703-H
T. P. Gaughan, 241-120H
K. S. Wierzbicki, 703-H
M. A. Hunter, 703-H
K. Z. Wolf, 704-S
J. V. Odum, 742-A
W. D. Dunaway, 703-18A
WMT Files, 703-H
File Code: 175.15

W-0517

INTER-OFFICE MEMORANDUM
Savannah River Site

Date: 17-Mar-1992 02:58pm EST
From: PAUL D. D'ENTREMONT
D'ENTREMONT-PD-O5438 AT A1 AT SASRS2
Dept: WMT
Tel No: 78727

TO: W. DANNY DUNAWAY (DUNAWAY-WD-O7436 AT A1 AT SLSRP1)

CC: Charles R. Hayes (HAYES-CR-Z9722 @A1@SLSRP1)

Subject: RE: Comments by Larry Arrington

Thanks for your response. That makes sense. However, it troubles me that David Wilson promised Francis Close Hart and Brian Costner that the public would have input. I wonder if SCDHEC realizes that they said that and feels bound by the commitment.

Also, I got your note suggesting that your group needs to be represented at FFA meetings, and I definitely agree. The next meeting is 24-25 March in Columbia (starting at 2:00 p.m. on the 24th and all day 25th).

W-0517

INTER-OFFICE MEMORANDUM
Savannah River Site

Date: 17-Mar-1992 12:59pm EST
From: W. DANNY DUNAWAY
DUNAWAY-WD-07436 AT A1 AT SLSRP1
Dept: ENVIRONMENTAL PROTECTION
Tel No: 5-5754

TO: See Below

Subject: RE: Comments by Larry Arrington

PAUL, I'M RESPONDING TO YOUR MEMO BECAUSE CHUCK IS ON 1/2 DAY SV THIS AFTERNOON.

I BELIEVE DAVID WILSON IS REFERRING TO THE NPDES PROCESS WHICH DOES ALLOW FOR PUBLIC INPUT DURING THE PERMITTING PROCESS. TYPICALLY, A WASTEWATER TREATMENT FACILITY WOULD FIRST OBTAIN AN NPDES PERMIT AND THEN A WASTEWATER CONSTRUCTION PERMIT. WITH THE PUBLIC'S INPUT, THE NPDES PERMIT WOULD ESTABLISH DISCHARGE LIMITS; THE CONSTRUCTION PERMIT FOR THE WASTEWATER TREATMENT FACILITY WOULD THEN INSURE THAT THE FACILITY WOULD BE DESIGNED AND BUILT TO COMPLY WITH THE NPDES PERMIT.

OBVIOUSLY, IN THIS SITUATION THERE IS NO NPDES PERMIT NEEDED, HENCE, NO PUBLIC INPUT.

HOWEVER, CHUCK OR MYSELF WILL CLARIFY THIS ISSUE WITH LARRY OR CARL.

Distribution:

TO:	PAUL D. D'ENTREMONT	(D'ENTREMONT-PD-05438 AT A1 AT SASRS2)
CC:	Charles R. Hayes	(HAYES-CR-Z9722 @A1@SLSRP1)
CC:	Brenda L. Lewis	(LEWIS-BL-06503 AT A1 AT SASRS2)
CC:	Jeff Pike	(PIKE-JA-Y5547 AT A1 AT SASRS2)
CC:	TIMOTHY P. GAUGHAN	(GAUGHAN-TP-08815 AT A1 AT SASRS2)
CC:	Matthew A. Hunter	(HUNTER-MA-L2335 AT A1 AT SASRS2)
C:	W. DANNY DUNAWAY	(DUNAWAY-WD-07436 @A1@SLSRP1)

W-0517

INTER-OFFICE MEMORANDUM
Savannah River Site

Date: 17-Mar-1992 11:17am EST
From: PAUL D. D'ENTREMONT
D'ENTREMONT-PD-O5438 AT A1 AT SASRS2
Dept: WMT
Tel No: 78727

TO: See Below

Subject: RE: Comments by Larry Arrington

No. I didn't get any feedback from DHEC on public participation. I meant to talk to Larry Arrington and Carl Richardson (the wastewater people) after the meeting, but they left the meeting early.

Chuck: Brenda is referring to the public meeting for the draft FFA (Hanwell Reporting Service, "Transcript of Public Meeting on Federal Facility Agreement and Public Involvement Plan," 23 January 1991). In the public meeting, David Wilson of SCDHEC discussed the reasons the tank farms were to be permitted as wastewater rather than RCRA. He also said, "Under the wastewater permitting process, there is an opportunity for public participation. When the permit is drafted, before it is finalized, there will be an opportunity for the public to comment and to participate in that process."

David Wilson's comments are pages 83 through 86 of the transcript, if you'd like to read it all. Gerry Steskal has a copy.

However, this surprised us. Do you know what Wilson is talking about?

Distribution:

TO:	Charles R. Hayes	(HAYES-CR-Z9722 @A1@SLSRP1)
TO:	Brenda L. Lewis	(LEWIS-BL-O6503 AT A1 AT SASRS2)
CC:	Jeff Pike	(PIKE-JA-Y5547 AT A1 AT SASRS2)
CC:	TIMOTHY P. GAUGHAN	(GAUGHAN-TP-O8815 AT A1 AT SASRS2)
CC:	Matthew A. Hunter	(HUNTER-MA-L2335 AT A1 AT SASRS2)
C:	W. DANNY DUNAWAY	(DUNAWAY-WD-O7436 @A1@SLSRP1)

W-0517

INTER-OFFICE MEMORANDUM
Savannah River Site

Date: 13-Mar-1992 03:02pm EST
From: Charles R. Hayes
HAYES-CR-Z9722
Dept: EPD
Tel No: X58838

TO: See Below

Subject: REVIEW STATUS OF TANK FARM / ITP PERMIT APPLICATION (U)

THERE HAS BEEN NO CHANGE IN STATUS OF THE SUBJECT REVIEW SINCE MY 3/6/92 IOM. I HAVE BEEN UNABLE TO REACH LARRY ARRINGTON SINCE PAUL TALKED TO HIM ABOUT EPA'S COMMENTS. HOWEVER, FROM MY CONVERSATION WITH LARRY EARLIER, I UNDERSTOOD HIM TO SAY THE RECEIPT OF EPA'S COMMENTS WOULD NOT HOLD UP SCDHEC SENDING US THEIR COMMENTS.

I WILL INFORM YOU IF I HEAR DIFFERENTLY. PLEASE CALL ME IF THERE ARE QUESTIONS.

Distribution:

TO:	TIMOTHY P. GAUGHAN	(GAUGHAN-TP-O8815 @A1@SASRS2)
CC:	Lori S. Coward	(COWARD-LS-Z6459)
CC:	W. DANNY DUNAWAY	(DUNAWAY-WD-O7436)
CC:	MONTE HAWKINS	(HAWKINS-M-O6779)
CC:	J. V. ODUM	(ODUM-JV-O4184)
CC:	Bill Van Pelt	(VANPELT-WB-O7016 @A1@SASRS2)
CC:	Jeff Pike	(PIKE-JA-Y5547 @A1@SASRS2)

W-0577

INTER-OFFICE MEMORANDUM
Savannah River Site

Date: 13-Mar-1992 12:29pm EST
From: PAUL D. D'ENTREMONT
D'ENTREMONT-PD-O5438 AT A1 AT SASRS2
Dept: WMT
Tel No: 78727

TO: See Below

Subject: Comments by Larry Arrington

Yesterday, at a meeting on the FFA, I ran into Larry Arrington and Carl Richardson. They were not directly involved in the meeting, but they had been in a previous meeting, and they stayed for the FFA meeting to see what happened relative to high-level waste.

Anyway, I mentioned to Larry that we were looking forward to seeing his comments on the permit application. He said that he was finished with his initial review and was trying to get concurrence to send the comments to SRS. However, he also implied that SCDHEC might wait until EPA had commented on the permit application before sending us comments. According to the FFA, EPA has the right to review the application and send comments to SCDHEC. But hearing Larry say this surprised me because I had seen no mention of it in your weekly status reports. I wonder if this is a new concern on the part of SCDHEC.

I let the matter drop because I didn't want to interfere with your dealing with Larry. However, I wanted you to know what Larry said. You might want to discuss this with Larry the next time to speak to him. Feel free to use my name.

I believe that the person at EPA who is coordinating review of the permit application is Victor Weeks, the FFA project manager (who was in the meeting, incidently). Gerry Stejskal can give you more details. Again I didn't discuss this with Larry, but I'd be glad to help you in any way I can on this.

Distribution:

TO:	Charles R. Hayes	(HAYES-CR-Z9722 @A1@SLSRP1)
CC:	Brenda L. Lewis	(LEWIS-BL-O6503 AT A1 AT SASRS2)
CC:	Jeff Pike	(PIKE-JA-Y5547 AT A1 AT SASRS2)
CC:	TIMOTHY P. GAUGHAN	(GAUGHAN-TP-O8815 AT A1 AT SASRS2)
CC:	Matthew A. Hunter	(HUNTER-MA-L2335 AT A1 AT SASRS2)
C:	W. DANNY DUNAWAY	(DUNAWAY-WD-O7436 @A1@SLSRP1)

W-0517

INTER-OFFICE MEMORANDUM
Savannah River Site

Date: 06-Mar-1992 01:08pm EST
From: Charles R. Hayes
HAYES-CR-Z9722
Dept: EPD
Tel No: X58838

TO: See Below

Subject: REVIEW STATUS OF TANK FARM / ITP PERMIT APPLICATION (U)

THE SCDHEC ENGINEER HAS COMPLETED HIS REVIEW OF THE SUBJECT CONSTRUCTION PERMIT APPLICATION PACKAGE. APPARENTLY THERE ARE A NUMBER OF COMMENTS / QUESTIONS. HE HAS TO MEET WITH HIS MANAGER TO ADDRESS SOME OF THESE CONCERNS. HE IS PLANNING TO CALL ME PRIOR TO FORMALLY SENDING THE COMMENTS. I WILL INFORM YOU AS SOON AS I HEAR A RESPONSE.

PLEASE CONTACT ME IF THERE ARE ANY QUESTIONS.

Distribution:

TO:	TIMOTHY P. GAUGHAN	(GAUGHAN-TP-O8815 @A1@SASRS2)
CC:	Lori S. Coward	(COWARD-LS-Z6459)
CC:	W. DANNY DUNAWAY	(DUNAWAY-WD-O7436)
CC:	MONTE HAWKINS	(HAWKINS-M-O6779)
CC:	J. V. ODUM	(ODUM-JV-O4184)
CC:	Bill Van Pelt	(VANPELT-WB-O7016 @A1@SASRS2)
CC:	Jeff Pike	(PIKE-JA-Y5547 @A1@SASRS2)

W0517

INTER-OFFICE MEMORANDUM
Savannah River Site

Date: 04-Mar-1992 10:55am EST
From: Jeff Pike
PIKE-JA-Y5547 AT A1 AT SASRS2
Dept: WMT
Tel No: x7-8843

TO: See Below

Subject: Additional information on the Phase II Tank Assessment

A question was raised about the specific need to keep the DOE signature statement in the Phase II Tank Assessment Document verses a letter. The PE, WMT, and EPD has pointed out that a letter to the PE from DOE with the same statements will suffice to fill the requirement. All of the previous conditions outlined in the earlier All-In-One document apply with the addition that DOE must generate a letter addressed to the PE prior to any changes to be made to the assessment document.

Distribution:

TO:	Michael C. Chandler	(CHANDLER-MC-O6868 AT A1 AT SASRS2)
TO:	Brenda L. Lewis	(LEWIS-BL-O6503 AT A1 AT SASRS2)
CC:	Matthew A. Hunter	(HUNTER-MA-L2335 AT A1 AT SASRS2)
CC:	Charles R. Hayes	(HAYES-CR-Z9722 @A1@SLSRP1)
CC:	W. DANNY DUNAWAY	(DUNAWAY-WD-O7436 @A1@SLSRP1)
CC:	PAUL D. D'ENTREMONT	(D'ENTREMONT-PD-O5438 AT A1 AT SASRS2)
CC:	Barbara J. Clark	(CLARK-BJ-L2439 AT A1 AT SASRS2)
CC:	Charles E. Anderson	(ANDERSON-CE-B7688 AT A1 AT SASRS2)
C:	Cynthia Blair-McManus	(BLAIR_MCMANUS-C-B8534 @A1@SASRS3)

2

INTER-OFFICE MEMORANDUM
Savannah River Site

Date: 04-Mar-1992 07:30am EST
From: Jeff Pike
PIKE-JA-Y5547 AT A1 AT SASRS2
Dept: WMT
Tel No: x7-8843

TO: See Below

Subject: Phase II Tank Assessment

Recent phone conversation with the PE that certified the Phase II Tank Assessment Document indicated that the PE is willing to modify the statement for DOE's signature.

The first sentence of the statement must remain the same. The second sentence reflects the general intention of Section 39 of the Federal Facilities Agreement. The PE prefers to modify the sentence to more accurately reflect the language used in Section 39.

In order to modify the document, I must account for all 36 copies of the assessment. I have 24 copies in my possession. Of the remaining 12 copies, DOE has at least 9 copies, including the original. I am in the process of locating and collecting all of the copies.

Preferentially, I would like the signer to draft an appropriate statement that they can sign.

Once a draft statement is satisfactory to the signer, I can produce a replacement page for the assessment. The original page must be signed by DOE prior to the PE recertifying the assessment. In the cover letter I will send to the PE with the replacement page, I must state that the assessment has not been changed accept for the signature page.

After all signatures are obtained, I will replace the page in the 36 copies of the assessment and distribute to appropriate EPD and WMT personnel. Further distribution will be handled by them. In addition, I will send a record copy of the assessment as submitted to the regulators to the PE.

Distribution:

TO:	Michael C. Chandler	(CHANDLER-MC-O6868 AT A1 AT SASRS2)
TO:	Brenda L. Lewis	(LEWIS-BL-O6503 AT A1 AT SASRS2)
CC:	Matthew A. Hunter	(HUNTER-MA-L2335 AT A1 AT SASRS2)
CC:	Barbara J. Clark	(CLARK-BJ-L2439 AT A1 AT SASRS2)
CC:	PAUL D. D'ENTREMONT	(D'ENTREMONT-PD-O5438 AT A1 AT SASRS2)
CC:	W. DANNY DUNAWAY	(DUNAWAY-WD-O7436 @A1@SLSRP1)
CC:	Charles R. Hayes	(HAYES-CR-Z9722 @A1@SLSRP1)
CC:	Charles E. Anderson	(ANDERSON-CE-B7688 AT A1 AT SASRS2)
C:	Cynthia Blair-McManus	(BLAIR_MCMANUS-C-B8534 @A1@SASRS3)

WASTE MANAGEMENT
UNCLASSIFIED FACSIMILE TRANSMITTAL
FAX NUMBER (803) 557-8091
FAX LOCATION 703 H, RM 23

DATE 2/28/92 TIME 10:55 AM

CHUCK HAYES

LOCATION 703-19A

TELEPHONE

FROM [illegible] PIKE

LOCATION [illegible] H

TELEPHONE [illegible]-8893

Total Number of Pages 8 INCLUDING COVER

MESSAGE SEE PAGE [illegible] OF THE [illegible] [illegible]

[illegible] 1803 [illegible]
[illegible] TRANSMITTAL

PROFESSIONAL ENGINEER CERTIFICATION

This Assessment Report was prepared under my supervision and direction. To the best of my knowledge and belief, this Assessment Report accurately describes and represents the existing and proposed secondary containment system for the F & H Area HLW Tank Farm.

SOUTH CAROLINA
REGISTERED PROFESSIONAL ENGINEER
No. 12633
RICHARD L. STEGEN

R L Stegen 9-10-91

R. L. Stegen, PE Date

Based on my inquiry of the person or persons responsible for reviewing this Assessment Report, to the best of by knowledge and belief, the factual information provided in the Assessment Report is accurate and documents provided in this Assessment Report have not been altered by the Department of Energy. The Department of Energy will also ensure that adequate resources are available to implement the commitments specified in this Assessment Report to provide and maintain the secondary containment systems in compliance with the Federal Facilities Agreement (Docket No. 89-05-FF).

DOE Representative Date

0 1919 01:10 FROM WASTE MANAGEMENT

W-0517

The South Carolina Engineering Examiner

Vol 4, No. 1

Newsletter of the South Carolina
State Board of Registration
for Professional Engineers & Land Surveyors

May, 1989

IN THIS EDITION...

TIER B LAND SURVEYING

Act 420 of 1986 amended the Code of Laws of South Carolina (1976) to provide for a TIER B Land Surveyor to prepare and furnish subdivision plans for sedimentation and erosion control and storm drainage systems, if the systems do not require the structural design of system components and are restricted to the use, where relevant, of any standards prescribed by local, state, or federal authorities.

Regulation 49-31 defining the scope of powers granted to a TIER B Land Surveyor is published on Page 2.

Qualifications for registration as a TIER B Land Surveyor, and information concerning the required eight-hour written examination will be provided by the Board upon request.

CONTENTS

Annual Renewal of Registration 1
Board's Jurisdiction, Registrant's Responsibility and the Complaint Process 1
Directory of Board Members 2
Board Appointments 2
Tier B LS Regulations Approved 2
Formal Hearings/Disciplinary Action 3
Chart of Complaint Process 4
Board Adopts Policy Pertaining to Sealing of Design Documents 5
1989 Board Calendar 5
Change of Address Form 6

ANNUAL RENEWAL OF REGISTRATION

Renewal notices will be mailed by the Board on May 15 to the registrant's [illegible] address on record; however, it is the registrant's responsibility [illegible] **license prior to the expiration date of June 30.**

The Board shall assess a late penalty of 20% of the annual [illegible] persons who do not renew their registrations by July 31. [illegible] for the month of August at 20% and for the month of September [illegible] will have a maximum grace period of three months following [illegible] the late penalty for renewal; however, those persons not [illegible] **September 30** shall either file a new application accompanied [illegible] application fee or, if in a position to do so, file a notarized affidavit [illegible] certifying that they have not been engaged in the practice of [illegible] surveying in South Carolina during the period their certificates [illegible] condition, accompanied by the total amount of unpaid renewal fees [illegible] **Any practice as a Professional Engineer or Land Surveyor in South [illegible] while renewal fees are delinquent is a violation of the law.**

A new application by a candidate whose certificate has lapsed [illegible] of the required renewal fee within three months of the due date [illegible] considered in the same category as a previously unregistered person [illegible] may be required to retake examinations as required by the Board [illegible] certificate number will be voided and a new number will [illegible] application has been approved by the Board.

BOARD'S JURISDICTION, REGISTRANT'S RESPONSIBILITY AND THE COMPLAINT PROCESS

By John McLaughlin, Board Investigator

During the daily operations of the South Carolina State Board of Registration for Professional Engineers and Land Surveyors, members of the [illegible] are frequently addressed questions from the general public regarding [illegible] jurisdiction in matters concerning allegations of misconduct [illegible] Inasmuch as concerns expressed and suggested remedial [illegible] unique circumstances of each situation, the simple and [illegible] cannot be readily applied to all contingencies. However [illegible] provide insight as to the Board's general jurisdiction [illegible] misconduct against registrants, a brief explanation of [illegible] providing the Board information that may [illegible] an abbreviated description of the formal and informal [illegible]

Under the authority of the Code of Laws of South Carolina, [illegible] of the Board [illegible] Professional [illegible]

(Continued on [illegible])

South Carolina State Board of Registration for Professional Engineers and Land Surveyors

BOARD MEMBERS

[illegible] Jr., P.E.
Chairman
W. Cali Thomas, Engineering
Orangeburg, S.C. 29116
Electrical - Term Expires 6/30/95

L. L. McNair, P.E.
Vice Chairman/Secretary
McNair, Johnson & Associates
P. O. Box [illegible]
Columbia, S.C. 29202
Civil - Term Expires 6/30/90

H. B. Stenseggen, Jr., P.E.
Retired, S.C. Electric & Gas Company
[illegible] Murray Blvd.
Charleston, S.C. 29401
Mechanical - Term Expired 6/30/93

L. G. Lewis, Jr., P.E.
Lewis-Blum, Lewis, Cross Engr.
110 West Lynch Street
Greenville, S.C. 29605
Civil - Term Expires 6/30/92

James T. McCarter, P.E.
President, Balmoral Corporation, Inc.
P.O. Box 17083
Greenville, S.C. 29616-2085
Mechanical - Term Expires 6/30/93

Geo. A. Z. Johnson, Jr., RLS & PE
[illegible] Street
Charleston, S.C. 29401
Land Surveyor/Civil - Term Expires 6/30/95

William A. Whitworth, RLS
Whitworth & Associates, Land Surveyors
P. O. Box 1073
Lexington, S.C. 29072
Land Surveyor - Term Expires 6/30/92

James Dominick
P.O. Box 36174, Station B
Greenville, S.C. 29606
Public Member - Term Expires 6/30/93

DIRECTOR
Mary M. Lee
S.C. State Board of Registration for
Professional Engineers & Land Surveyors
P.O. Drawer 5408
Columbia, S.C. 29250

Telephone (803) 734-9166

APPOINTMENTS ..

Governor Carroll Campbell on November 10, 1988 appointed the following [illegible] the Board for five-year terms:

Mr. James Dominick of Greenville was reappointed as the Public Member. Mr. Dominick is associated with J. C. Roy Company.

Mr. Geo. A. Z. Johnson, Jr., PE, RLS of Charleston succeeds Mr. Purnell [illegible] RLS, who served as a member of the Board since 1973. Mr. Johnson is President of Geo. A. Z. Johnson, Jr., Inc. Engineers, Planners and Land Surveyors. He received his B. S. Degree in Civil Engineering from The Citadel in 1951.

Mr. William A. Whitworth, Sr., RLS of Lexington succeeds Mr. [illegible] Jr., PE, RLS, who served as a member of the Board since 1985. Mr. Whitworth is Principal of Whitworth and Associates, Land Surveyors. He received a B. S. Degree in Forestry from Clemson University in 1962.

Also on January 10, 1989, Mr. James T. McCarter, PE, of Greenville was [illegible] the Governor to succeed Dr. B. L. Baker, PE, who served on the Board for [illegible] years. Mr. McCarter is President of Balmoral Corporation. He received his B. S. Degree in Mechanical Engineering from Clemson University in 1958.

TIER B LS REGULATIONS APPROVED

Pursuant to Section 40-21-45 of the Code of Laws of South Carolina [illegible] amended by Act 420 of 1986, the Board has promulgated regulations [illegible] scope of powers granted to TIER B Land Surveyors as outlined [illegible] 10(7b).

Chapter 49, Regulation 49-51. Scope of Powers Granted to [illegible] veyors.

A. The practice of TIER B Land Surveying as determined [illegible] by the Board shall include the scope of powers granted to [illegible] Additionally, a TIER B Land Surveyor shall have the authority [illegible] by these regulations, to practice the design of storm drainage [illegible] preparation of sedimentation and erosion control plans applicable [illegible] ment of residential subdivisions. Included within this scope [illegible] Surveying is the design of stormwater detention or retention facilities [illegible] surveyor's design of storm drainage systems provided, [illegible] are not lakes, ponds or similar impoundments intended to [illegible]

(1) As used in this section, the term "residential subdivision" [illegible] developed for single or duplex residences or for [illegible] where individual lots are established for such residential use. [illegible] projects for development of commercial or industrial [illegible] within the scope of powers.

(2) Where reference has been made to "lakes, ponds [illegible] intended to contain water at all times," such [illegible] TIER B Land Surveyor's authority to prepare [illegible] or hydraulics of these impoundments [illegible] ments will require a more detailed analysis [illegible] Consequently, design of impoundments [illegible] be based upon [illegible]

FORMAL HEARINGS/DISCIPLINARY ACTION

June 30, 1988 to May 1, 1989

The Board has taken disciplinary action concerning the following licensees. Although every effort is made to ensure that the information is correct, before making any specific decision based upon the information, you should check with the Board office to assure accuracy. The listing may not reflect a change occurring near or following the publication date. Further, the listing does not reflect pending appeals for rehearings. Each order is listed as follows with the name, charges and action taken.

Edward F. Woodward, RLS #8613; File No. 88-1062
Charges: Misconduct; failure to comply with Minimum Standards for the Practice of Land Surveying in South Carolina and Regulations 49-13, 49-21 (H), 49-25 and 49-26; Date of Order: August 25, 1988 - Consent Order; Disposition: One year suspension, suspended upon $2,000.00 fine; service of one year probation and restitution of $650.00 to client.

[illegible] Ashley Abel, RLS #2551; File No. 88-1096
Charges: Misconduct; failure to comply with Minimum Standards for the Practice of Land Surveying in South Carolina, as well as Regulations 49-13, 49-21(H), 49-25 and 49-26; Date of Order: August 25, 1988 - Consent Order; Disposition: One year suspension, suspended upon $500.00 fine; service of one year probation; restitution of $250.00 to client; and requirement that registrant correct any problems in the future for adjacent land owners caused by registrant's misconduct.

Niels Christensen, RLS #[illegible]; File No. [illegible]
Charges: Misconduct; failure to comply with Minimum Standards for the Practice of Land Surveying in South Carolina; Date of Order: October 2[illegible], 1988; [illegible] One year probation and $750.00 fine.

John L. Husty, PE #[illegible]; File No. 88-[illegible]
Charges: Misconduct; unlicensed [illegible] ing; Date of Order: August 25, 1988 [illegible] Disposition: One year suspension [illegible] ment of $2,000.00 fine; one year [illegible] ment that registrant correct any [illegible] current landowners including [illegible] erty conveyed.

M. Kenyon Millard, PE #[illegible]; File No. [illegible]
Charges: Misconduct; unlicensed [illegible] ing; Date of Order: November [illegible] Disposition: One year suspension [illegible] ment of $2,000.00 fine; one [illegible]

BOARD'S JURISDICTION *(Con't from Page 1)*

on January 17, 1974 for the purpose of safeguarding the life, health, property and welfare of the public, as well as for maintaining a high standard of integrity in the practice of engineering and land surveying. Two statutes--Sections 40-21-340 and 40-21-350--empower the Board to discipline a registrant if it is determined either by means of a formal Board hearing or by a less formal procedure of stipulated settlement (consent order) that the registrant is guilty of either (1) gross negligence, (2) incompetency, (3) deceit, (4) fraud, or (5) misconduct. Sanctions imposed by the Board may include a formal reprimand, license suspension or revocation, and may include fines up to two thousand dollars for each violation to a maximum of ten thousand dollars.

A registrant's professional responsibilities to the public as well as an obligation to provide accurate and truthful information to the Board in matters which involve possible violations of regulatory laws and regulations are encompassed in Regulations 49-12, 49-13 and 49-18. The engineer or land surveyor has a primary obligation to protect the safety, health and welfare of the public. Performance of professional duties may involve providing the Board information involving registration status, location of principal or branch office(s), verification of nature and extent of supervisory control over a specific project or office operation and so on. Forthright and candid written responses are not only a requirement of Regulation 49-12 but most often provide a basis for more timely and less formal [illegible] Board is pleased that most [illegible] mentioned are provided in a [illegible] willingness to cooperate with the Board [illegible] the public.

Although the Board receives [illegible] anonymous letters from [illegible] registration laws of this state or [illegible] Professional Conduct, such [illegible] unreliable unless substantiated [illegible] person may prefer formal charges against [illegible] charges must be made in writing and [illegible] person making them. All charges [illegible] Board as unfounded or trivial, must [illegible] within three months after the date on which [illegible] filed. The time and place for the [illegible] Board and a copy of the charges, together [illegible] time and place of hearing, must be [illegible] mailed to the last known address of [illegible] days before the date fixed for the hearing [illegible] accused registrant may appear [illegible] sented by [illegible] witnesses and [illegible] own [illegible]

South Carolina State Board of Registration for Professional Engineers and Land Surveyors

COMPLAINT PROCESS

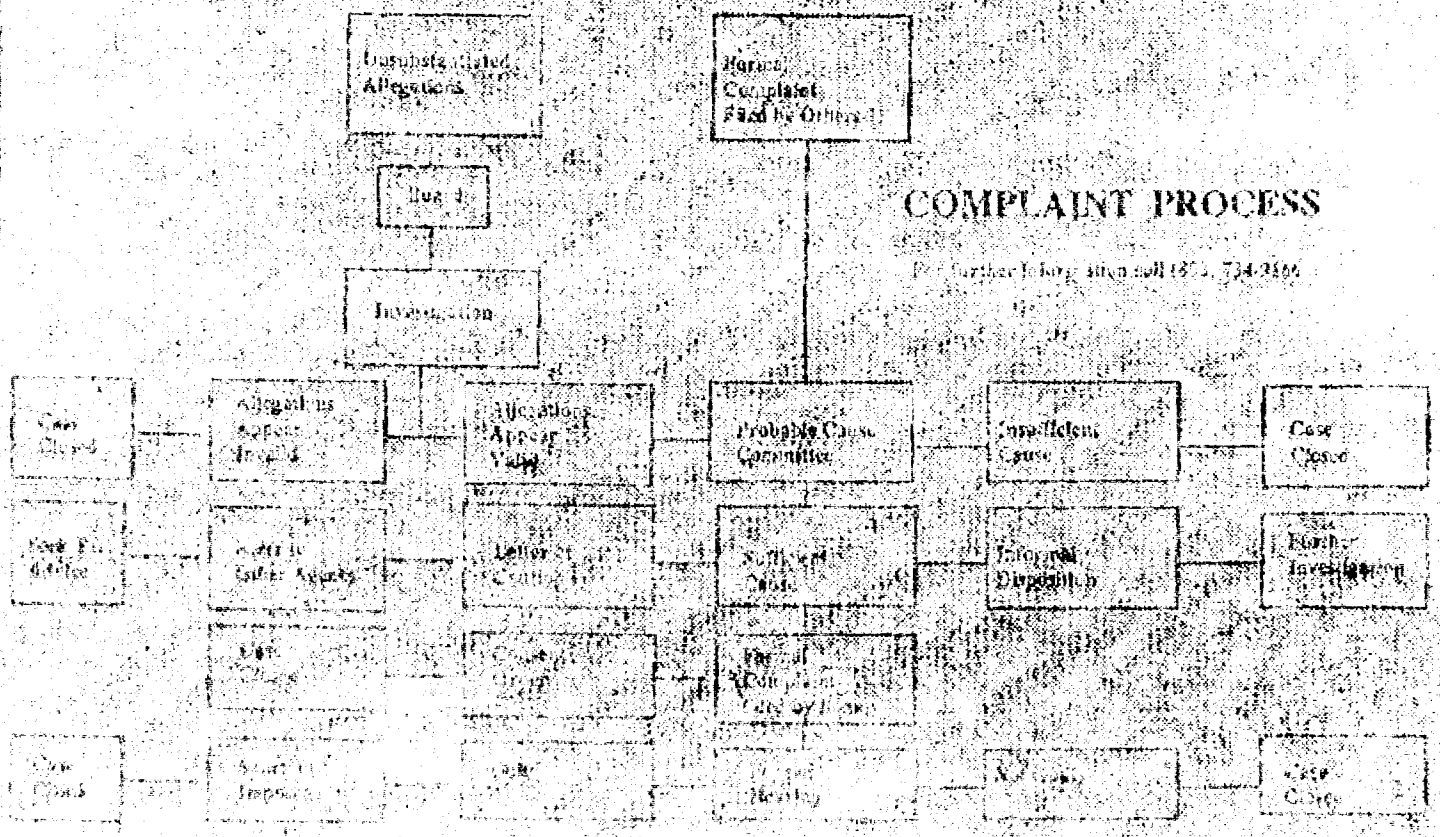

[illegible] the practice. The exclu- [illegible] of powers of [illegible] "[illegible] drainage systems" is not intended to apply to submerged [illegible] used in detention and retention basins.

C. The practice of TIER B Land Surveying is further limited to the use of predesigned structures which are approved by the county or municipal governmental agency having jurisdiction. Where standard design structures cannot be used because of extra loading, extreme depth or unusually large size, the structure shall be designed by a licensed engineer. "Predesigned Structures" is intended to cover two situations:

(1) As used in this section, the standard design for catch basins, junction boxes, and [illegible] signed.

(2) As used in this section, [illegible] basins, junction boxes, [illegible] duced by concrete companies [illegible] ered as "predesigned" and may [illegible] where allowed by the [illegible]

D. In exercising powers of a TIER B Land Surveyor, the surveyor shall [illegible] perform only those assignments [illegible] he is authorized by the state and [illegible] regulations, and for which he is [illegible] by education or experience in the [illegible] technical area of TIER B Land Surveying involved.

Additional information [illegible] tions for registration as a TIER B Land Surveyor will be provided [illegible] upon request.

BOARD ADOPTS POLICY PERTAINING TO SEALING OF DESIGN DOCUMENTS

On March 15, 1989 the Board adopted the following procedures for the proper sealing of site adapt drawings prepared by others as well as situations involving federal agency documents submitted to state permitting authorities through private professional engineers.

A. Site Adapt Drawings Prepared by Others:

1) Only drawings prepared and sealed by a Registered Professional Engineer may be site adapted;

2) Written permission must be granted by the Engineer who has sealed the original drawings or by the legal owner(s) of the documents;

3) All documents must be reviewed and any necessary revisions made to bring [illegible] into compliance with [illegible] codes and regulations and [illegible] specific job requirements;

4) After [illegible] the Registered Professional Engineer shall add his/her seal to the document [illegible] with the following statement [illegible] of similar meaning: signed by the site adapt Engineer [illegible] have been [illegible] reviewed and be approved by the original [illegible] or the legal owner of the documents.

[illegible] site adapt [illegible]

adapt documents.

B. Federal Agency Documents Submitted Via Professional Engineers to State Permitting Authorities:

1) The original documents shall have been prepared under the direct supervisory control of a professional engineer;

2) The Registered Professional Engineer shall thoroughly check all calculations, specifications and drawings produced by the agency;

3) The Registered Professional Engineer shall make on-site inspections and/or such revisions as deemed sufficient to safeguard the life, health, property and welfare of the public;

4) The Registered [illegible] shall have [illegible] document [illegible]

5) The Registered [illegible] shall have [illegible] the agency [illegible] issued by the [illegible]

6) The Registered [illegible] shall not be [illegible]

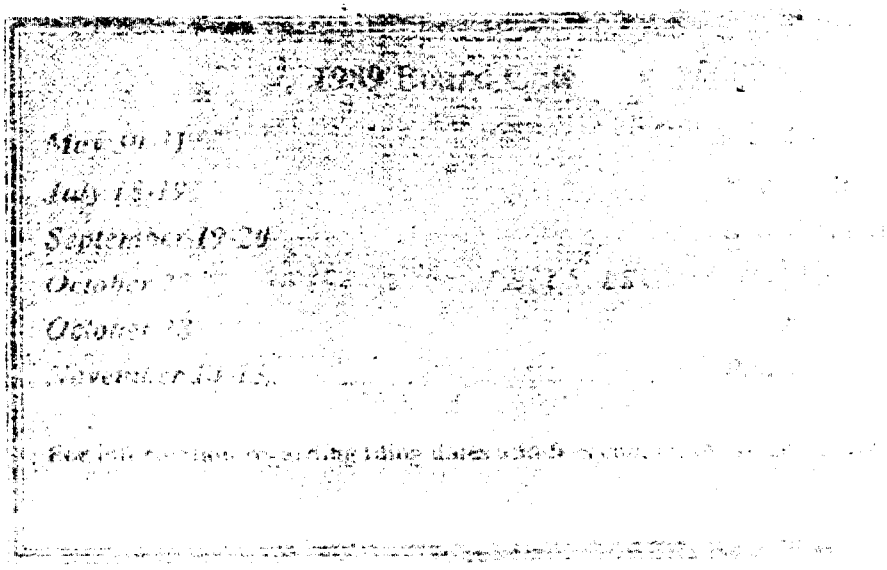

CHANGE OF ADDRESS NOTICE

Please print or type all information

Registration No. _____

* Business Address: _____
First Name

_____

_____

*Residence Address: _____

_____

_____

*Preferred Mailing Address

Mail to: S. C. State Board of Registration
for Professional Engineers and Land Surveyors
P. O. Box 50408
Columbia, S. C. 29250-0408

S. C. State Board of Registration for
Professional Engineers & Land Surveyors
P. O. Drawer 50408
Columbia, South Carolina 29250-0408

11533 0.
RICHARD LEROY STEGEN
CHARLES T. MAIN COMPANY
4 OX HEDGEMORE DR.
CHARLOTTE, NC 28209

W-0517

February 28, 1992 TANK FARMS

TO: Danny Dunaway, Manager LSC
Permitting Field Support Group
WSRC Environmental Protection Department
742-A

DOE-SR CONDITIONAL CONCURRENCE FOR WSRC SUBMITTING THE F/H AREA PHASE II TANK ASSESSMENT REPORT TO SCDHEC AND EPA

SR conditionally concurs on the subject WSRC submittal to SCDHEC. Please incorporate the attached DOE comments into the transmittal letter. Also, please take the necessary steps to have the package at EPA as soon as possible.

Gary S. Hoover

Gary S. Hoover
Air and Water Compliance Branch
DOE/SR-Environmental Compliance Div.
(x5-3968)

Attachment

cc w/attach:
Cindi Blair-McManus, DOE/SR HLWD, 703-H
Chuck Hayes, WSRC EPD, 742-A
G. S. Hoover, ENV
File

2

TRANSMITTAL LETTER CHANGE REQUESTS

- The sentence "Although these tanks do not include all of the FFA design features for vaults, liners, or double-walled tanks, approval as equivalent devices seems appropriate because the tanks have adequate secondary containment, and because SRS practices of chemistry control and annulus ventilation have virtually eliminated the risk of large leaks" is to be replaced with **"Although these tanks do not include all of the FFA design features for vaults, liners or double-walled tanks, approval as equivalent devices is appropriate because the tanks have features that would prevent or mitigate releases or potential releases. These features include leak pans, concrete vaults, chemistry control, and annulus ventilation."**

- The transmittal letter should also include the following statement in a stand alone paragraph:
  No signature is provided by a Department of Energy (DOE) Representative in the report because the signature block was included in error.

- Spell out the acronym SRS.

W-0517

ESH-FSG-92DRAFT

February 28, 1992

Mr. M. F. Sadler, Director
Industrial and Agricultural Wastewater Division
South Carolina Department of Health
and Environmental Control
2600 Bull Street
Columbia, South Carolina 29201

Dear Mr Sadler:

F/H AREA HIGH LEVEL RADIOACTIVE WASTE (HLRW) TANK FARM PHASE II TANK ASSESSMENT REPORT (U)

Please find enclosed three (3) copies of the subject tank assessment report as required by the draft CERCLA Federal Facility Agreement (FFA). This report addresses the remainder of the tanks/components in the tank farms, excluding the ITP portion submitted to your office on 7/8/91.

Based on the data presented in this assessment, the SRS requests that Waste Tanks 2-8 be approved as equivalent devices for secondary containment under Appendix B, C.1.e.iv of the FFA. Also enclosed (Attachment 1) is an expounded contention on the request for approval that these tanks be approved as equivalent devices for secondary containment. Although these tanks do not include all of the FFA design features for vaults, liners or double-walled tanks, approval as equivalent devices seems appropriate because the tanks have adequate secondary containment, and because SRS practices of chemistry control and annulus ventilation have virtually eliminated the risk of large leaks. These practices appear to exceed FFA requirements. Moreover, the SRS plans to use these tanks only in the event of an emergency. Having this greater flexibility improves SRS's ability to avoid environmental releases.

Please contact C. R. Hayes (725-8838) if there are any questions.

Yours very truly,

J. V. Odum, Manager
Facility Support Section
Environmental Protection Department

CRH:
Attachment

cc: C. Peters, SCDHEC, Lower Savannah District
C. Richardson, SCDHEC-Columbia
J. S. Kutzman, EPA Region IV
L. C. Goidell, 703-A *
S. R. Wright, 703-41A (2) Concur *
* w/one attachment

SCDHEC FINAL INSPECTION FOR THE F/H HIGH LEVEL RADIOACTIVE WASTE TANK FARMS

2/26/92

TENTATIVE AGENDA

SCDHEC / EPD / DOE-ECD MEET AT A-AREA BADGE OFFICE	9:00 AM
ALL PARTIES MEET AT F-AREA TANK FARM BACK GATE FOR F-TANK FARM INSPECTION	9:30 AM
NEW WASTE TRANSFER FACILITY INSPECTION	11:00 AM
LUNCH IN H-AREA	11:30 AM
ITP / ESP INSPECTION	12:30 PM
H-TANK FARM INSPECTION	1:30 PM
RETURN TO A-AREA FOR DEPARTURE	2:15 PM

SRS HIGH LEVEL WASTE MANAGEMENT SYSTEM

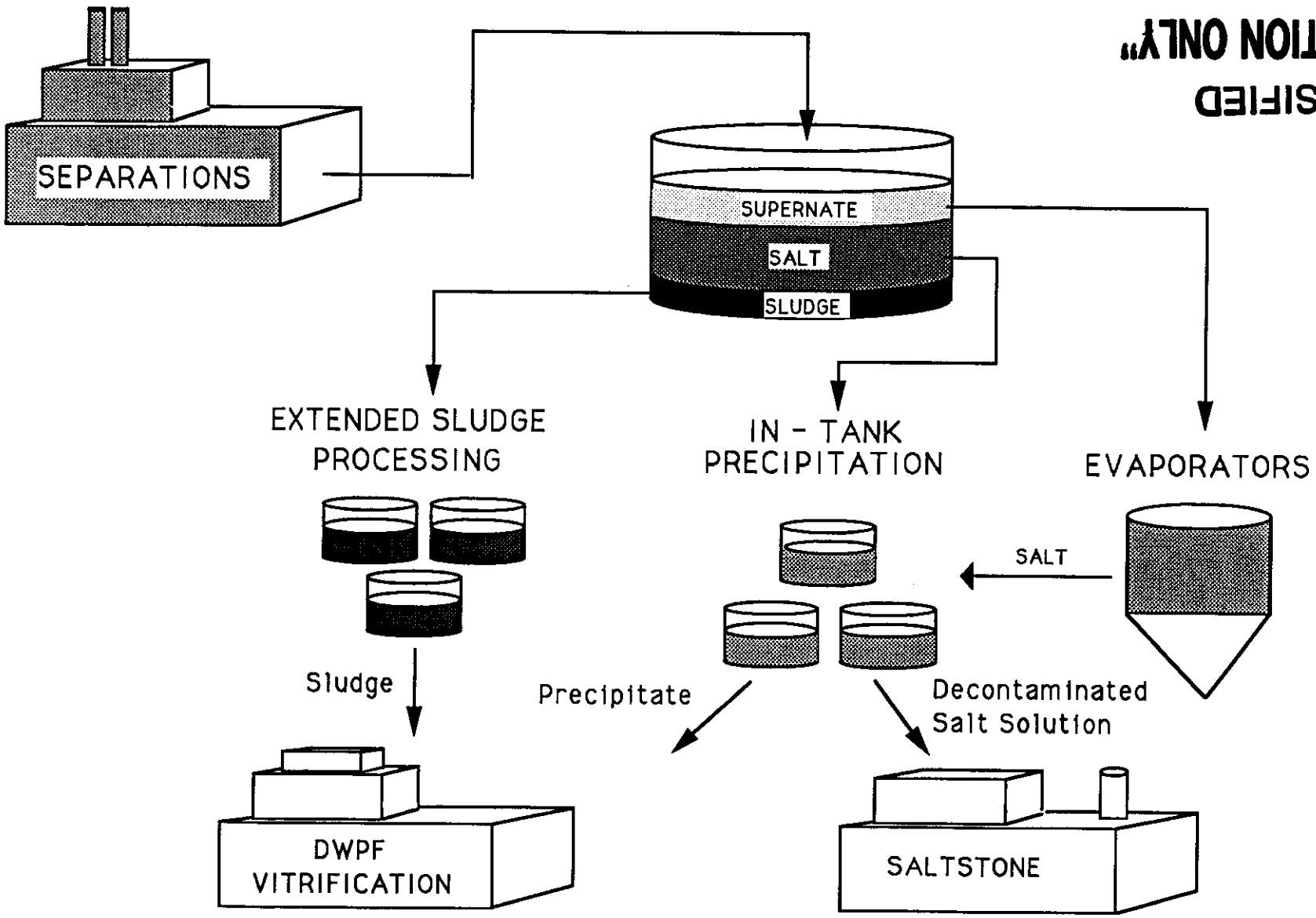

UNCLASSIFIED
"INFORMATION ONLY"

Tim Gaughan
557-8088

IN-TANK PRECIPITATION PROCESS FLOW

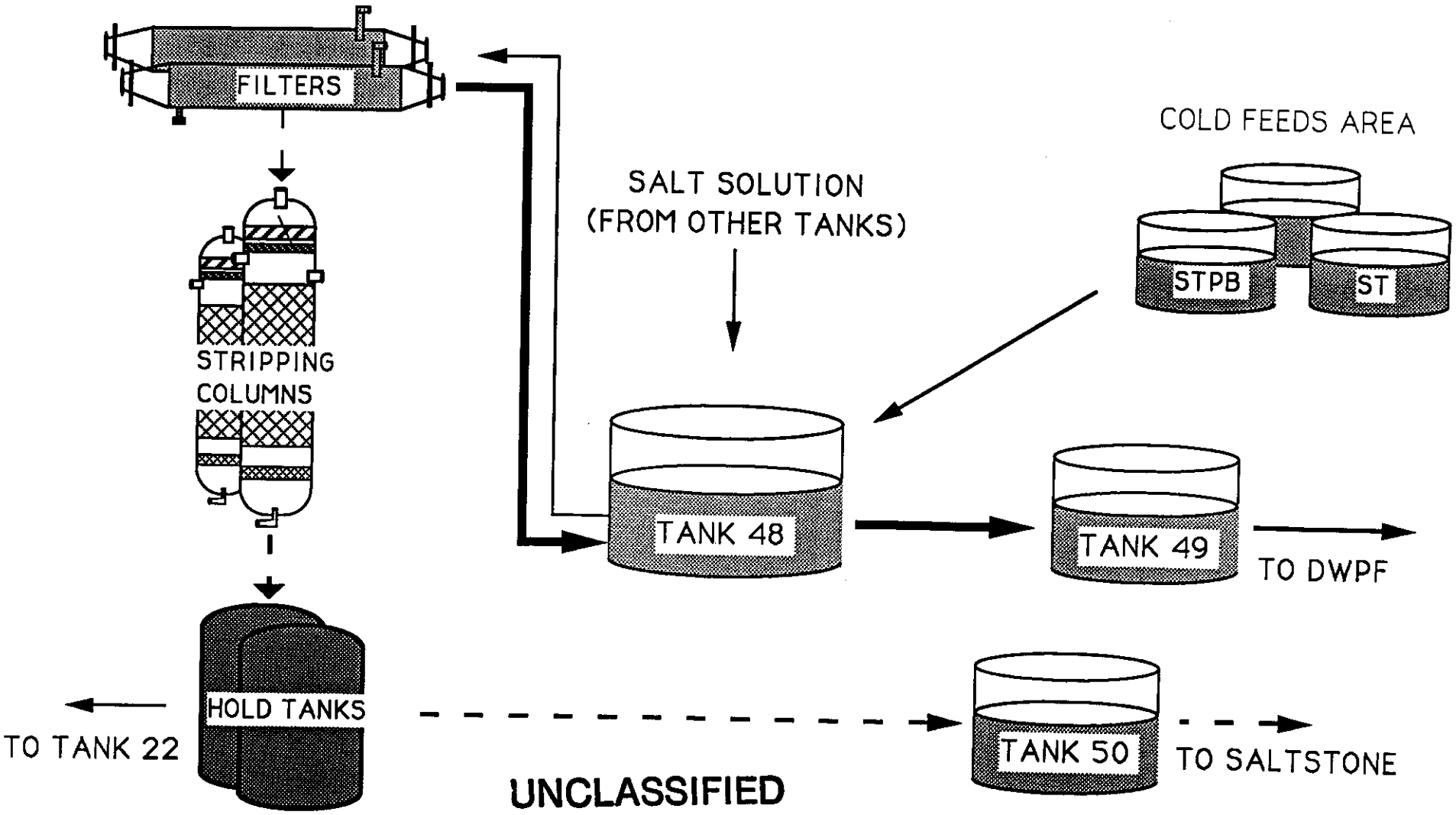

UNCLASSIFIED

"INFORMATION ONLY"

W-0517
W-0073

DON'T SAY IT - WRITE IT

February 21, 1992

To: G. S. Hoover, 703-41A

From: C. R. Hayes, 703-18A
(x5-8838)

TRITIATED REACTOR WASTEWATER TRANSFER TO TANK 17 (U)

Attached for your concurrence is a copy of the subject letter being submitted to SCDHEC. The letter is intended to follow-up the telephone conversations with SCDHEC. Please review and offer any comments.

Please call me if you have any questions.

cc: L. S. Coward, 703-18A
W. D. Dunaway, 703-18A

2

ESH-FSG-92DRAFT

February 26, 1992

Mr. M. F. Sadler, Director
Industrial and Agricultural Wastewater Division
South Carolina Department of Health
and Environmental Control
2600 Bull Street
Columbia, South Carolina 29201

DRAFT

Dear Mr Sadler:

TRANSFER OF TRITIATED REACTOR WASTEWATER TO WASTE TANK 17 (U)

Ref: Telephone conversation, Hayes to Arrington, 1/16/92

Please accept this letter as follow-up to the referenced telephone conversation. Between 1/17/92 and 2/12/92, approximately 120,000 gallons of non-hazardous tritiated (5950 total curies) reactor wastewater was transferred via tanker trucks from the 106 reactor buildings to Tank 17 in the F-Area Tank Farm. The tritium in the water resulted from drainage of heat exchangers being replaced in the K-Reactor Area and from washwater used to subsequently clean sumps.

The wastewater will be used to remove salt from the waste tanks and will be processed through the In-tank Precipitation Facility before eventual disposal in the Saltstone vaults. Officials from EPA Region IV, SCDHEC-Lower Savannah District and the SCDHEC-Bereau of Solid and Hazardous Waste were also notified prior to the transfer.

The SRS appreciates your Staff's cooperation in this matter. Should there be any questions, please contact C. R. Hayes (725-8838).

Yours very truly,

W. D. Dunaway, Manager
Permitting Field Support Group
Environmental Protection Department

CRH:

CC: M. C. Reece, SCDHEC, Lower Savannah District
L. E. Arrington, SCDHEC
A. Coffey, SCDHEC
S. R. Wright, 703-41A (2) Concur

Mr. M. F. Sadler

February 26, 1992
ESH-FSG-92DRAFT

BCC:

S. S. Cathey, 703-H
L. S. Coward, 703-18A
P. D. D'Entremont, 703-H
M. D. Dukes, 742-A
W. D. Dunaway, 703-18A
A. R. Gough, 742-A
M. Hawkins, 742-A
C. R. Hayes, 703-18A
G. S. Hoover, 703-41A
C. E. Jewell, 703-8C
B. L. Lewis, 703-H
J. V. Odum, 742-A
W. L. Payne, 742-A
J. R. Shaffer, 703-41A
C. B. Stevens, 703-H
K. Z. Wolf, 704-15S
G. T. Wright, 703-H
Central Files, 703-A
EPD Fileroom, 742-A

DRAFT

T.R. File
W-0517
W-0073

WSRC-EPD Telecon's Record

Subject Title : Wastewater Permitting *Date:* 1/24/92 *Time:* _____

Purpose: Update SCDHEC of ongoing transfer of tritiated (4700 ci) reactor water to Tank 17 in the High Level Waste Tank Farm

Call Made By: C. R. HAYES CR Hayes

Person(s) Contacted: L. E. ARRINGTON

Discussion Notes:

Caller	Respondent
As a result of cleaning (decontaminating) the sumps that lead to the 106-K building and the continuous collection of steam condensate, as much as 120,000 - 150,000 gallons of water will now need to be transferred to Tank 17.	We appreciate being kept informed. You may wait until the transfer is complete before sending us a letter documenting this effort.

Additional Actions Needed:
Send follow-up letter to SCDHEC.

Distribution:
L. S. Coward, 703-18A (PFSG-File)
W. D. Dunaway, 703-18A
M. Hawkins, 742-A
C. R. Hayes, 703-18A
J. V. Odum, 742-A
W. L. Payne, 742-A
C. B. Stevens, 703-H

[redacted]
W-0073

DATE

PHONE

Total Number of Pages

MESSAGE:

OF ... TRANSMITTAL

Draft

2

January 17, 1992

WER-IWT-92-000

Mr. L. C. Sjostrom, Assistant Manager
Environmental Restoration and
Waste Management
Field Office, Savannah River
U. S. Department of Energy
Aiken, SC 29802

Dear Mr. Sjostrom:

Request For Acceptance Of Tritiated Water

References:

1. Wk Building Water from J.C. Papalski to G.K. Georgeton dated January 11, 1992.
2. Chemistry Requirements for Disposal of 106-K Water in WM Tank Farm (U) from G. F. Wright to S. Smith dated January 13,1992 WER WMT-920032.
3. Tritiated Water Acceptance Review Committee (U) dated January 9, 1992 WSRC-[illegible]-71.
4. [illegible] Recommendations For Closure Verification Of The Tritiated Water Acceptance Review [illegible] dated January 14, 1992 from J.W. Runnels NMPRMP920008.
5. [illegible] Tritium Disposal in Saltstone (U) from E.L. Wilhite to P.D. d'Entremont [illegible] January 10,1992 IWT-LLW-92-0006.
6. [illegible] of Tritiated Water on ITP Processing from D.T. Hobbs to B. L. Lewis dated February 10, 1992.
7. Accepting Tritiated Water from K Area (U) from P.D. d'Entremont to B.L. Lewis dated January 2,1992 WER-WMT-920002.
8. Impact of 106-K Water Addition on the Waste Chemistry in Tank 17 (U) from G.K. Georgeton to B.L. Lewis dated January 2, 1992 WER-WMT-920005.
9. Tritium Calculations for Tank 17 Following K Area Water Additions (U) from G.K. Georgeton to B.L. Lewis dated January 9, 1992 WER-WMT-920022.

The purpose of this letter is to request authorization for acceptance, storage, and eventual disposition in Saltstone of approximately 75,000 gallons of tritiated waste water. The water was recently generated from a failed process water heat exchanger at K Reactor. The first trailers of water that will be received are from 106-K building and reference (1) provides the analytical results. The remaining trailers will be analyzed as specified in reference (2) and the results transmitted from Reactors to Waste Management.

The operational, design changes, and environmental agency informal notifications necessary for receipt of this water are included in the independent review by references (3&4). Categories of operation addressed by the review included equipment, personnel safety, training, procedures, safety documentation, emergency preparedness, regulatory compliance, and Health Protection. The review concluded that the water acceptance can be accomplished in compliance with applicable operating policies, procedures, and environmental regulations.

The long range plan is to process the water through In-Tank Precipitation for eventual disposition in Saltstone. This plan has been evaluated by references (5,6,7,8&9).

I look forward to your response to this request in order to allow acceptance of the water as soon as possible. Please contact G.T. Wright 7-1527 if you have any questions regarding this request.

Sincerely,

N. C. Boyter, Vice President & General Manager
Waste Management & Environmental
Restoration Division

DTO

cc: A. L. Schwallie, 703-A
C. D. Rice, 703-A
C.E. Anderson, 703-H

WESTINGHOUSE SAVANNAH RIVER COMPANY

INTER-OFFICE MEMORANDUM

IWT-LLW-92-0006

January 10, 1992

CC: W. L. Tamosaitis, 773-A
W. E. Stevens, 773-43A
B. L. Lewis, 703-H
S. T. Wach, 703-H
W. T. Goldston, 704-S
K. Z. Wolf, 704-S
M. Hawkins, 742-A
J. R. Fowler, 704-Z

To: P. D. D'Entremont, 703-H

From: E. L. Wilhite, 773-43A (5-5800)

Impact of Tritium Disposal in Saltstone (U)

As we discussed this morning, I have considered the impact of disposing of tritiated water from K-Area in Saltstone. I understand that the water will contain 7,000 curies of tritium. I assume that this tritium will be processed through In Tank Precipitation over the course of one year. Using the flow sheet value(1) of 7.2 million gallons of salt solution per year, the resulting concentration of tritium in salt solution would be 208.8 nCi/g.

The feed specification for tritium in salt solution feed to saltstone is 1,800 nCi/g(2). This feed specification was set to ensure that personnel working in Z-Area would be protected from exposure to undue concentrations of tritium in the air, to ensure that the resulting saltstone would not exceed the NRC Class A waste limit and to ensure that groundwater would not be contaminated beyond the 4 mrem/year EPA drinking water standard. The groundwater impact of tritium in saltstone is calculated on the basis that all of the salt solution processed during the operating lifetime of Z-Area (estimated to be 115 million gallons) contains the same amount of tritium. Any tritium migrating to the groundwater from saltstone will incur substantial additional reduction in concentration due to decay and dilution before it leaves the Savannah River Site to the Savannah River.

Based on this, processing the tritium contaminated water from K-Area will not exceed any of the safety and environmental protection criteria established for saltstone.

References

1. WSRC-RP-89-1303, "Material Balance and Planned Operating Schedule for the In-Tank Process," D. D. Walker and B. A. Hamm, 12/27/89.

2. WSRC-OX-89-15-001, Rev. 3, "Tank 50 Test Authorization," 12/11/91.

5

INTER-OFFICE MEMORANDUM
Savannah River Site

Date: 10-Jan-1992 12:41pm EST
From: David Hobbs
HOBBS-DT-T7196 AT A1 AT SLSRP1
Dept: IWT
Tel No: 52838

TO: Brenda L. Lewis (LEWIS-BL-O6503 @A1@SASRS2)

CC: Darrel Douglas Walker (WALKER-DD-T5550 AT A1 AT SLSRP1)
CC: Dennis L. Fish (FISH-DL-T6288 AT A1 AT SLSRP1)
CC: Walt Tamosaitis (TAMOSAITIS-WL-T9848 AT A1 AT SLSRP1)

Subject: Impact of Tritiated Water on ITP Processing

D. Walker and I discussed possible impacts of using the tritiated water in the ITP process. We could not identify any impact that the addition of the tritiated water would have on the process chemistry.

If the tritiated water is used, the tritium content in the decontaminated supernate will be increased and could be the predominant radionuclide in decontaminated supernate. This may be important in assessing personal exposure in the ITP lab or in the event of a spill.

Assuming all of the dilution water in a ITP batch is furnished having a tritium concentration of 0.019 Ci/gallon (estimated concentration in Tank 17 after transfer and dilution), the tritium concentration in the decontaminated supernate could be as high as 1700 nCi/gm. This concentration of tritium is at the maximum allowable limit for feed to saltstone (1800 nCi/g) and well above the expected concentration of 10 nCi/g. The actual tritium concentration will be lower than this due to evaporative and radioactive decay losses.

WESTINGHOUSE SAVANNAH RIVER COMPANY

INTER-OFFICE MEMORANDUM

WER-WMT-920002

January 2, 1992

To: B. L. Lewis, 703-H

From: P. D. d'Entremont, 703-H, 78727
M. A. Hunter, 703-H, 71447

Accepting Tritiated Water from K Area (U)

Introduction

As we discussed today, WMO plans to accept about 60,000 gallons of non-hazardous tritiated water from K Area. As we understand the plan, this water will be put into tank 17. From which it will be processed via standard tank farm processing (i.e., evaporation, ITP, etc.) prior to final disposition in Saltstone at some time in the future.

You asked for an examination of the appropriate regulatory documents to determine if there are any concerns about receipt of this waste into tank 17.

Summary

The one concern identified is that accepting waste into tank 17 is not described in the wastewater permit application that has been submitted to SCDHEC. However, the permit has not yet been issued and the permit application allows general interpretations which could be applied to this situation. Also, since the waste is non-hazardous water, SCDHEC should allow us considerable latitude in handling it. Attached is the completed Waste Management Environmental Compliance Checklist.

WMT recommends that SCDHEC and EPA be informed of our intent before we actually accept the waste.

Information

The basis for the waste to be accepted is as follows:

- Approximately 60,000-70,000 gallons will be received; conclusions would not be changed if the volume were larger.
- The waste contains about 7,000 curies of tritium; it could contain much more and not change the conclusions.
- The waste is river water contaminated with reactor moderator. The waste is believed to be non-hazardous (based on process knowledge), and this will be confirmed by sampling and analysis.
- The waste contains a small fraction of D_2O.

Regulations and Agreements Considered

The following regulations and regulatory documents were considered, each of which has or might have some authority over operations in tank 17:

- Tank Farm Wastewater Permit Application
- RCRA
- Federal Facility Agreement
- Federal Facility Compliance Agreement
- NESHAP

A brief discussion follows of each regulation or document.

Tank Farm Wastewater Permit Application

Presently there appears to be no permit modifications needed, however a more detailed analysis will be completed at a later date to determine if permit modification is needed.

8

RCRA

The language in the RCRA Interim Status permit for the the Tank Farm is very general and does not preclude the addition of non-hazardous waste to the tank farm.

Federal Facility Agreement (FFA)

Tank 17 has inadequate secondary containment for high-level waste use, and is one of the tanks that the Federal Facility Agreement requires to be removed from service. However, the FFA specifically provides that "the DOE may continue to use tanks scheduled to be removed from service for receipt and storage of wastes according to the approved schedule and prior to approval of the schedule." (December 1992 draft, paragraph IX.E.1, page 17).

Thus, the FFA allows tank 17 to be used for receipt and storage of any kind of waste until the scheduled date for removal from service, which has not yet been established. There is no concern with receiving the waste at this time.

Federal Facility Compliance Agreement (FFCA)

The FFCA covers Solvents and California List Land Disposal Restriction (LDR) wastes at SRS, and prohibits the introduction of these wastes into tanks with inadequate secondary containment, which includes tank 17.

However, since this reactor area stream is non-hazardous, it would also not be LDR. Thus, this waste is outside the scope of the FFCA, and the FFCA does not restrict the addition of the waste in any way.

NESHAP

Calculations by R. K. Larsen show that for a tank with 6,500 curies of tritium oxide the Effective Dose Equivalent for tritium releases is 2.7 x 10-5 mrem/year (R. K. Larsen, DRAFT memo, "Effects of Tritium Present in

Tank Farm on NE[illegible], 10 December 1991). (Note: Larsen's calculations were made using procedures prescribed in the regulations for making such a determination. The calculations produce a do[illegible] that is to be used for permitting purposes only. The calculation as[illegible] all radioactive material is released in one year, doesn't accurately re[illegible]eal tritium releases, which would be much lower.)

For the estimated curie content in the K area waste, the dose equivalent would be 2.9 x 10-5 mrem/year. This is well below the NESHAP limit of 0.1 mrem/year, for continuous monitoring requirements. There is a requirement for periodic testing under NESHAP which can be met by using annual silica gel sampling. There is no immediate NESHAP concern about sending the K-area waste to tank 17. Note that the same conclusion would apply even if the amount of tritium were increased by three orders of magnitude.

Action Items

1. Verify by sampling and analysis that the waste from K reactor is not hazardous.

2. Inform SCDHEC and EPA of our intention to add the tritiated water to tank 17.

Approvals

Prepared by: for PDd'E
Paul D. d'Entremont, WMT

Prepared by:
Matthew A. Hunter, WMT

Approved by:
Brenda L. Lewis, WMT

Approved by:
Cary B. Stevens, WMT

TR File
W-0517

WSRC-EPD Telecon Record

Subject Title : Wastewater Permitting **Date:** 1/16/92 **Time:**

Purpose: Inform SCDHEC of proposed transfer of 75,000 gallons of tritiated (4700 ci) reactor water to Tank 17 in the High Level Waste Tank Farm

Call Made By: C. R. HAYES CR Hayes

Person(s) Contacted: L. E. ARRINGTON

Discussion Notes:

Caller

We are proposing to transfer 75,000 gallons of tritiated (4700ci) reactor water to Tank 17 in the High Level Waste Tank Farms. Water will eventually end up in the Saltstone facility. We have already notified EPA, Myra Reece and Alan Coffey of the transfer. They all had no problems with the plan. We originally discussed with Marion Sadler and he deferred the decision to you. Transfer will probably occur sometime this week.

Respondent

Since the material is going to end up in Saltstone, I have no concerns. If the material will go to ETF and eventually H-016 there may be concerns. We will send you a letter confirming this next week.

Additional Actions Needed:
Send follow-up letter to SCDHEC.

Distribution: TANK FARMS
L. S. Coward, 703-18A (PFSG-File)
W. D. Dunaway, 703-18A
M. Hawkins, 742-A
C. R. Hayes, 703-18A
J. V. Odum, 742-A
W. L. Payne, 742-A
C. B. Stevens, 703-H

OSR 3-4A-W (Rev1-89)

W-0517

WESTINGHOUSE SAVANNAH RIVER COMPANY

INTER-OFFICE MEMORANDUM

ESH-FSG-920018

January 7, 1992

TO: M. HAWKINS, 742-A

FROM: W. D. DUNAWAY, 703-18A (X5-5754)

TRANSFER OF TRITIATED REACTOR WATER TO HIGH LEVEL WASTE TANK 17 (U)

Ref: Memo, Hawkins to Dunaway, 1/7/92

I have reviewed the four (4) questions raised in your referenced memo and my opinions are as follows.

1. *Will the Industrial Wastewater Treatment Permit Application for the tank farm that has been submitted to SCDHEC need to be revised prior to accepting this material in the Tank Farm?*

No. Any activities relative to tank farm operations that occur prior to the wastewater permit being issued are regulated by the RCRA interim status permit. However, once SCDHEC issues the wastewater permit, which could be anytime within the next several months, a permit revision will be necessary.

2. *Should the tank farm permit application be revised to allow this or other similar transfers in the future?*

Yes. Section 5.0 of the permit application, Influent Waste Characterization, lists Reactor Filter Backwash (5.1.5) as the only source from reactor operations. This section provides a detailed description and characterization for the filter backwash water including generation and location of disposal (Tank 47).

3. *What, if any, impact will accepting this material have on the Z-Area Industrial Wastewater Treatment Permit? Will this permit need to be revised before accepting the contaminated water in the tank farm? Will the Z-Area permit need to be revised to allow processing of the material in Z-Area?*

This material will impact the Z-Area permit and the permit would need to be revised prior to processing the contaminated water. The typical tritium concentration in the salt solution feed listed in the SCDHEC permit application (Permit#12683) is 15.7 nCi/g. Based on the average annual salt solution feed rate, this would approximate 350 Ci/yr. of tritium. The 7000 Ci of tritium in the contaminated water equates to about 20 years of normal feed. The permit also requires that if the salt solution feed changes appreciably, notification to SCDHEC is necessary.

4. *Should EPA and/or SCDHEC be notified of this transfer?*

If the intent is to introduce this material into the tank farm for ultimate treatment at Z-Area, I believe that SCDHEC should be notified prior to transfer to the tank farm (does not include an assessment of interim status implications) and prior SCDHEC approval is required for processing at Z-Area.

Be aware that SCDHEC is about 50% complete with their review of the tank farm application. Once they issue that permit, this material could not be transferred to the tank farm without their prior approval.

Also, for your consideration, I believe that disposal of this material in the K-Area percolation drain field (Permit #16,449) is a viable alternative. The drain field is permitted to receive ~6.4 million gallons of purge water per year containing 1.0×10^4 Ci of tritium. Although prior SCDHEC approval is required, I believe this would be less of a problem than revising the Z-Area permit.

Please let me know if you need any further assistance.

WDD: pr
Attachment

CC: S. S. Cathey, 704-H
J. W. Cook, 742-A
C. R. Hayes, 703-18A
J. V. Odum, 742-A
EPD File

W-0577

January 7, 1992

TO: DANNY DUNAWAY

FROM: CHUCK HAYES CEH

TRANSFER OF TRITIATED REACTOR WATER TO HIGH LEVEL WASTE TANK 17

Ref: Memo, Hawkins to Dunaway, 1/6/92

I have evaluated Questions 1-3 contained in the referenced memo. My opinions are offered below.

1. *Will the Industrial Wastewater Treatment Permit Application for the tank farm that has been submitted to SCDHEC need to be revised prior to accepting this material in the Tank Farm?*

No. The Tank Farms are presently under RCRA interim status and thus the wastewater permit application is not binding.

2. *Should the tank farm permit application be revised to allow this or other similar transfers in the future?*

Yes. Similar transfers from reactor areas and SRL are discussed in the present application. However this particular activity is not covered and would need to be added.

3. *What, if any, impact will accepting this material have on the Z-Area Industrial Wastewater Treatment Permit? Will this permit need to be revised before accepting the contaminated water in the tank farm? Will the Z-Area permit need to be revised to allow processing of the material in Z-Area?*

The typical Tritium concentration in the salt solution feed listed in the SCDHEC permit application (Permit # 12683) is 15.7 nCi/g. Based on the average annual salt solution feed rate, this would approximate 350 Ci/yr. of Tritium. Given the total of 7000 Ci in the 60,000 gallons of water, the Tritium dose would be equivalent to 20 years of normal feed. This is obviously well above the permitted "limits". Also, the permit requires that if the salt solution feed changes appreciably, notification to SCDHEC is necessary. Revision of the Z-Area permit is not necessary prior to receipt of this material in the Tank Farm, however. SCDHEC would probably require a permit modification to allow processing of the material in Saltstone.

W-0577

WESTINGHOUSE SAVANNAH RIVER COMPANY

INTER-OFFICE MEMORANDUM

CRH,

ESH-FSG 920010

JANUARY 6, 1992

cc: to TK. FARM FILE + Z-Area

TO: ~~W. D. DUNAWAY, 742-A~~

FROM: M. HAWKINS, 742-A MH

TRANSFER OF TRITIATED REACTOR WATER TO HIGH LEVEL WASTE TANK 17

I have been assigned to a task team charged with reviewing the option of transferring reactor secondary cooling water (river water) contaminated with reactor coolant to High Level Waste Tank 17. There are approximately 60,000 gallons of water contaminated with approximately 7,000 curies of tritium. The contaminated water is not believed to be hazardous, as defined by the Resource Conservation and Recovery Act (RCRA) and does not contain other chemical contaminants. It may be necessary to adjust the pH of the water prior to adding it to Tank 17. Tank 17 is a single wall tank and currently contains a waste "heel" and inhibited water.

Please provide me with your written opinion with regard to the following.

1. Will the Industrial Wastewater Treatment Permit Application for the tank farm that has been submitted to SCDHEC need to be revised prior to accepting this material in the Tank Farm?

2. Should the tank farm permit application be revised to allow this or other similar transfers in the future?

3. What , if any, impact will accepting this material have on the Z-Area Industrial Wastewater Treatment Permit? Will this permit need to be revised before accepting the contaminated water in the tank farm? Will the Z-Area permit need to be revised to allow processing of the material in Z-Area.

4. Should EPA and/or SCDHEC be notified of this transfer?

The first meeting of the task team is scheduled for Monday, January 6. A schedule has not been established for completing the review, however, this will have a very high priority so I need your answer as soon as possible.

Thank you for your assistance.

cc: J. V. Odum, 742-A
J. W. Cook, 742-A
S. S. Cathey, 704-H
EPD FILE

W-057

WESTINGHOUSE SAVANNAH RIVER COMPANY

INTER-OFFICE MEMORANDUM

SEND TO RON ROBER

ESH-FSG 920010

JANUARY 6, 1992

CRH, Pls. evaluate #'s 1,23 — need response by COB (if possible) 1/6

TO: W. D. DUNAWAY, 742-A

FROM: M. HAWKINS, 742-A MH

TRANSFER OF TRITIATED REACTOR WATER TO HIGH LEVEL WASTE TANK 17

I have been assigned to a task team charged with reviewing the option of transferring reactor secondary cooling water (river water) contaminated with reactor coolant to High Level Waste Tank 17. There are approximately 60,000 gallons of water contaminated with approximately 7,000 curies of tritium. The contaminated water is not believed to be hazardous, as defined by the Resource Conservation and Recovery Act (RCRA) and does not contain other chemical contaminants. It may be necessary to adjust the pH of the water prior to adding it to Tank 17. Tank 17 is a single wall tank and currently contains a waste "heel" and inhibited water.

Please provide me with your written opinion with regard to the following.

1. Will the Industrial Wastewater Treatment Permit Application for the tank farm that has been submitted to SCDHEC need to be revised prior to accepting this material in the Tank Farm? NO, IS UNDER INTERIM STATUS (RCRA)

2. Should the tank farm permit application be revised to allow this or other similar transfers in the future? YES, IT ALLOWS SIMILAR TRANSFERS NOW! NEED TO BE MORE DEFINITIVE, HOWEVER

3. What , if any, impact will accepting this material have on the Z-Area Industrial Wastewater Treatment Permit? Will this permit need to be revised before accepting the contaminated water in the tank farm? Will the Z-Area permit need to be revised to allow processing of the material in Z-Area. ① PRIOR NOTIFICAT ② NO ③ PERHAPS SO IN LINE WITH

4. Should EPA and/or SCDHEC be notified of this transfer? YES

The first meeting of the task team is scheduled for Monday, January 6. A schedule has not been established for completing the review, however, this will have a very high priority so I need your answer as soon as possible.

Thank you for your assistance.

W-0517

INTER-OFFICE MEMORANDUM
Savannah River Site

Date: 05-Nov-1991 12:16pm EST
From: Jeff Pike
PIKE-JA-Y5547 AT A1 AT SASRS2
Dept: WMT
Tel No: x7-8843

TO: Charles R. Hayes (HAYES-CR-Z9722 @A1@SLSRP1)

CC: Brenda L. Lewis (LEWIS-BL-O6503 AT A1 AT SASRS2)
CC: Michael C. Chandler (CHANDLER-MC-O6868 AT A1 AT SASRS2)
CC: PAUL D. D'ENTREMONT (D'ENTREMONT-PD-O5438 AT A1 AT SASRS2)
CC: W. DANNY DUNAWAY (DUNAWAY-WD-O7436 @A1@SLSRP1)

Subject: Phase II Assessment Report Cover Letter Additions

Attached is our draft additions to make to the cover letter for the Phase II tank farm tank assessment document. I did not have a copy of the existing letter to incorporate the text precisely. There two formats that serve our purpose equally well. One format incorporates everything into a three page letter. The other would keep the letter to one page and add a two to three page attachment which would contain most of the additions. I leave the choice to fit your needs.

Please be sure to have Geri Stejskal review the final before issuing to DOE for review. I understand DOE is anticipating this letter in the near future but will not be able to react until next week because some of the "players" are out of town.

I promised to get this to you last Friday, but composing this text has been quite troublesome.

If there are any questions, please call me at 7-8843 or e-mail a note.

Based on the data presented in this assessment, SRS requests that SCDHEC approve Waste Tanks 2 through 8 as equivalent devices for secondary containment under Appendix B, C.1.e.iv of the FFA. The assessment shows that these tanks meet the performance requirements specified in the FFA for secondary containment. Although these tanks do not include all of the FFA design features for vaults, liners, or double-walled tanks, SRS believes that approval as equivalent devices is appropriate because the tanks have good secondary containment, and because SRS practices of chemistry control and annulus ventilation have virtually eliminated the risk of large leaks from these tanks. These SRS practices are above and beyond that required by the FFA. Moreover, SRS plans to use these tanks for emergencies only. Having this extra space to use in the event of an emergency would give SRS extra options in the event of an emergency and would improve SRS's ability to avoid environmental releases.

EPA Guidance on Equivalent Device

Since the language of the FFA is derived from RCRA regulation, SRS reviewed EPA guidance on equivalent device requests under RCRA. EPA guidance document EPA/530-SW-87-002A, Technical Resource Document for Obtaining Variances from the Secondary Containment Requirement of Hazardous Waste Tank Systems, suggests applying for an equivalent device if the tank system clearly has secondary containment and if the secondary containment meets the performance requirements.

Section 3.1 of the assessment report details the secondary containment features for the Type I waste tanks. These features include primary containment, an annular pan, and a concrete vault with water stops in the joints. None of these features fully meet the FFA design requirements of a liner, a vault, or double walled tank (FFA Appendix B, C.1.f.i through C.1.f.iii). However, the tanks clearly have secondary containment. The assessment demonstrates that the tank systems have leak detection and removal capability and meet all FFA performance requirements (FFA Appendix B, C.1.a through C.1.d).

SRS Practices to Prevent and Mitigate Leaks

In addition to the FFA requirements, SRS practices help prevent leaks and releases. SRS controls the chemical composition of the waste in the tanks in order to eliminate the environment that causes the stress corrosion cracking (see Attachment C of the assessment report). The annular space is ventilated with warm air that dries liquid in the annulus. If a leak occurs, the waste seeps slowly, dries quickly and crystalizes. Upon crystallization, the waste plugs the leak, significantly reducing the leak rate.

SRS experience has shown that the 5 foot annulus pan in the Type I Waste Tank are more than adequate as secondary containment as long as ventilation is maintained. As noted in the assessment, a total of nine Type I and II Waste Tanks at SRS have leaked some waste from the primary to the secondary. In all cases, the leaks seeped

slowly and were arrested by the annulus ventilation. In only one instance did the waste level rise above the annulus pan. This occurred in Tank 16 on September 8, 1960. The Tank 16 conditions at the time of the occurrence were unique (DP-1358, Leakage from Waste Tank 16, Amount, Fate, and Impact, November, 1974) and do not exist in any waste tanks today:

- Tank 16 is by far the most cracked tank in the SRS tank farms, with about 300 to 350 identified cracks, compared to about 75 identified cracks for the remaining eight tanks with cracks. It is the only tank that C. T. Main found unfit for use (Section 4.2.5, page 143 of the assessment report).

- After the first leak was discovered in Tank 16, SRS continued to add waste to the tank for 6 months. The leakage was allowed to continue for an additional 5 months, after which the level was pumped sufficiently to prevent further leakage.

- The Tank 16 annular ventilation system was turned off for 96% of the time during the period between discovery of the leak and over flow of the annular pan. Records show that the leak rate steadily increased, reaching a maximum of 4 gpm on October 1, 1960. At that time, the waste level in the tank dropped below the level of a number of cracks, reducing the leak rate.

The record shows that waste would not have overflowed the Tank 16 annulus pan if today's operating practices had been in place. Specifically, in the Type I Tanks for which SRS requests equivalent device approval, annular ventilation is maintained constantly, transfer jets are installed in all tank annuli, and the chemical environment is maintained to prevent stress corrosion cracks. In addition, periodic tank inspections verify the condition of the tank.

SRS's Need for These Tanks

SRS plans to use these tanks for emergencies, not for normal receipt and storage of waste. The space in these tanks would allow SRS to accept large volumes from the retention basin if the basin becomes contaminated beyond the treatment capacity of the F and H ETF (see line number 149 on Figure 3-11 of the assessment report). Contaminated cooling water may need to be sent to the tank farms from the separations facilities or from the RBOF facility. Other events may cause a large amount flush water to be sent to the tank farms from the separations facility. SRS already maintains 1.3 million gallons of emergency capacity, but the benefit of seven 750,000 gallon tanks (5.25 million gallons) allows a tremendous amount of flexibility to handle an emergency situation.

Other Notes

In addition, please note the following about the assessment report:

On page 151, Section 4.5.5 details the integrity examination for the 242-H Evaporator. It explains that a leak test will be performed and based upon successful completion of the

test, the facilities are fit for intended use. The leak test could not be conducted at the time of the assessment because the evaporator was not operating. When the evaporator restarts operation, a leak test will be performed and documented as part of the startup procedure. If SCDHEC desires to see the results, the documentation can be submitted with the annual submission of tank assessment reports required by the FFA.

On page 114, in section 3.7.3.3, the last sentence reads "... hydrogeologic <u>preserves</u>...". This should read "... hydrogeologic <u>pressures</u>...".

OSR 3-4A-W (Rev1-89)

WR0517

WESTINGHOUSE SAVANNAH RIVER COMPANY

INTER-OFFICE MEMORANDUM

WER-WMT-910102

October 24, 1991

To: B. L. Lewis, 703-H

Jeff Pike

From: J. A. Pike, 703-H, 7-8843

Comments from DOE on the Phase II Tank Assessment for the Tank Farms

DOE has recently reviewed the final Assessment Report Phase II for the F and H-Area High Level Radioactive Waste Tank Farms (U), Revision 0, August, 1991, for approval and have expressed several concerns about the document. A meeting was held October 15, 1991, with DOE to discuss these comments and develop resolutions. Attending the meeting were Harvey Rice and Philip Prater, DOE Environmental Division; Cynthia Blair-McManus, DOE, High Level Waste Group; and Matt Hunter, Brenda Lewis, Jeff Pike, and Paul d'Entremont of WMT. The resolutions resulted in a couple of additions to the document transmittal letter. One large addition will discuss the reasons why secondary containment on Type I Tanks 2-8 should be approved as an equivalent device. The second addition will explain that the leak test results performed during the 242-H Evaporator restart procedures will be submitted with the annual submission of assessment reports. The cover letter will be revised by EPD to reflect the additional information. The remainder of the concerns will be addressed with information in this memo.

The concerns and our responses follow in two parts. Each part addresses comments made on separate reviews by DOE Environmental Division and DOE Environmental Restoration Division. The comments from the reference are shown in italics, and our responses are in normal type.

Part 1: Comments from TA025.3/0218, 9/30/91:

General Comments

1. The statement "Based on the information provided by the U. S. Department of Energy (DOE)" appears a number of times throughout the document. The remainder of the statement then simply says that such-and-such a system complies with the requirement of secondary containment. However, the reviewer has no means to decide whether this is true. South Carolina Department of Health and Environmental Control (SCDHEC) will require an adequate explanation to make a decision whether or not this document fulfils the FFA requirement. Thus, more data should be included in order for the reviewer to decide if the assessment is complete and adequate.

Considering that excessive detail provided to SCDHEC may inhibit operation of the facility, it is not in the best interest for DOE to provide more detail. The document presents the level of detail that the preparer believes is adequate. The FFA requires the assessment. The language of the FFA is derived from RCRA which would imply that RCRA assessments are acceptable examples to emulate. Considering that the "independent" PE (independent from design and construction) certified this assessment as adequate, that this PE has 9 years environmental compliance experience, that this PE had a large number of example assessments to rely for determining adequate level of detail, and that the PE had the assessment reviewed for adequacy by another PE in another engineering firm with 14 years experience in vessel design including tank assessments, then the level of detail presented will likely by acceptable to the regulators. The purpose behind the phrase "*Based on the information provided by the DOE*" was to indicate that the facilities are not readily inspectable for confirmation of design drawings. The liability the PE accepts when certifying this document amounts to stating that these tanks have been designed and built adequately for storage of HLW. Without access for adequate inspection, a PE will not certify such a statement without some caveat to the extent of the assessment or, in this case, the source of information used for verification purposes. As agreed to at the meeting, no change to the document will be made.

2. The statement "DOE is [investigating] options" frequently appears throughout the document. It is conjectured that SCDHEC will require an explanation of the options rather than this generalized statement. The options should be detailed in the document.

The only instance of the above phrase concerns the secondary containment breach of the overheads cell of the 242-16H Evaporator. The breach has been corrected recently, but existed at the time of the assessment. This change will be detailed in the schedule required for all items not meeting secondary containment to be submitted after the draft FFA is approved. Future changes will be addressed in assessments submitted to SCDHEC as required by the FFA. An instance of a similar phrase, "DOE investigating", concerns corrosion effects of halogen concentrations on stainless steel, but only in terms of waste compatibility. SRL has a continuing committee studying corrosion problems in the Tank Farms which is evaluating the effects of halogens on stainless steel. The effects do not become important until much higher concentrations are present than what exists in the Tank Farms today. Current corrosion controls protect against the halogen induced corrosion. As agreed to at the meeting, no addition will be made to the document.

3. The statement "Seems to be adequate" appears throughout the document and is ambiguous. The condition is either adequate or not and should be so stated.

The phrase *"Seems to be adequate"* is used in subjects such as waste compatibility for DWPF Vitrification facility recycle waste. This waste composition is estimated only because the waste does not exist yet. None of the assessment conclusions have been caveated with this phrase. The following paragraphs detail all locations were the phrase "seems to be" appears:

> 3.1.2 and 3.2.2 Waste Compatibility: The sodium hydroxide inhibitor <u>seems to be</u> depleted over time. Currently, quantitative values of the sodium hydroxide depleted over a specific period of time are unavailable.
>
> 3.5.1 [Evaporator] Design Information: Both the evaporator containment structure and the overheads hold tank cell of all the evaporators are covered to prevent precipitation from accumulating in the secondary containment device. The overheads hold tank cell, however, is open to the environment on one side. A laterally directed rain could enter this area. The likelihood of significant quantities of precipitation entering this structure <u>seems to be</u> minimal.
>
> 3.5.2 Waste Compatibility: All of the stainless steel used for the secondary containment devices in the evaporators is 304L stainless steel. This type of steel <u>seems to be</u> compatible with the chemically controlled waste managed in the evaporators.
>
> 3.5.6 Secondary Containment Determination: 242-16F: Both the evaporator cell and the hold tank cell of this evaporator are lined with stainless steel. The volume of these lined areas are capable of holding the volume of the largest tank contained within. The structural support <u>seems to be adequate</u> [USED HERE BECAUSE THE SYSTEM IS NOT BY THE PE] and leak detection and liquid removal devices are provided in both areas. This evaporator system satisfies the requirements of secondary containment, provided current operating and

monitoring procedures are followed. [NOTICE THE CONCLUSION REQUIRED OF THE ASSESSMENT IS NOT CAVEATED WITH THE PHRASE.]

3.6.2 Waste Compatibility: All of the stainless steel used for the secondary containment devices in the pump pits is 304L stainless steel. This type of steel seems to be compatible with the chemically controlled waste managed in the pump pits.

3.7.2.2 Waste Compatibility: Inhibitors (hydroxides, nitrites) are added to the waste to inhibit the effects of nitrate induced SCC. A detailed discussion of this condition is included in Attachment C. DOE is currently investigating the effects of the chloride content of the waste on stainless steel. The chemically controlled waste seems to be compatible with this type of line.

3.7.4.2 Waste Compatibility: DOE is currently investigating the effects of chloride and halogen content of waste on stainless steel. This is not a major concern since the chloride and halogen content of the wastes managed in the F and H Area HLW Tank Farm is very low (see Attachment B). Current standard operating procedures disallow use of any marking, packing, insulating, or wrapping material that contain any type of chloride or halogen to be used in contact with stainless steel used to contain waste. This restriction is a result of a study into the cause of a leak in a stainless steel pipe. The study showed that the tape used to wrap the pipe contained a polyvinylchloride resin. Due to high radiation fields and elevated temperatures, free chlorides were released and caused chloride stress cracking. The chemically controlled waste seems to be compatible with this type line jacket.

3.8.2 Waste Compatibility: All of the waste streams managed in the F&H Area HLW Tank Farm are usually diverted and transferred through a DB. The constituents and characteristics of these wastes are contained in Attachment B. All of the stainless steel used for the secondary containment devices in the diversion boxes is 304L stainless steel. This type of steel seems to be compatible with the chemically controlled waste managed through the diversion boxes.

As agreed to at the meeting, no change will be made to the document.

4. There are a number of grammatical errors in the document. A technical editor should review the document prior to submittal to SCDHEC.

The PE was allowed considerable independence in performing the assessment and producing a report. Unfortunately, a technical editor was not part of their plans and grammatical errors do not change the content of the assessment.

Specific Comments

5. Page xvii, Diversion Boxes - The third sentence refers to a detailed explanation of the use of diversion boxes which is included in the Wastewater Permit Application for the F and H-Area HLW Tank Farm. The SCDHEC reviewer may not have seen the wastewater application or may have trouble locating it. It would be advisable to at least summarize the use of the diversion boxes in this section.

The draft FFA requires this assessment to be submitted with the wastewater permit application. The SCDHEC reviewer will have the permit application or have easy access to the permit. Therefore, in order to minimize the bulk of the report, duplicate material was included by reference only. As agreed to at the meeting, no change will be made to the document.

6. Page 84, 242-164 - This replacement page is missing the last five lines from the original page. Thus, the page ends with an incomplete statement and the full meaning of this section is incomplete.

All lines are included on the final document. The replacement pages were meant to show how specific comments on the final draft had changed the text of the document before the final document was produced. Unfortunately, these facsimile pages were interpreted to be exact replacements for the pages.

7. Page 89, Section 3.6.2 Waste Compatibility - This replacement page is missing the last six lines from the original page. Thus, the page ends with an incomplete sentence and thought. This discrepancy needs to be resolved.

See response to item 6.

8. Page 113 - This is a replacement page. However, it is obvious that information has been dropped from the original page. This discrepancy should be resolved.

On the old page, in section 3.7.3.3, the last sentence reads "... hydrogeologic preserves...". This should read "... hydrogeologic pressures...".

See response to item 6.

The final document was produced with the typo. This typo will be pointed out in the cover letter.

9. Page 120 - This is a replacement page which bears no resemblance to the original page and omits at least half of the original content. This discrepancy should be resolved.

The final document was determined to contain all the information required.

10. Page 127 - This page is missing from the review copy.

The missing page is included in the final document.

Part 2: Comments from TA025.3/0218A, 10/1/91:

1. Section 3.1.2 - The hazardous characteristic of salt and sludge are described in terms of Extraction Procedure (EP) toxicity. The EP testing protocol was replaced with the Toxicity Characteristic Leaching Procedure (TCLP) for the toxic characteristic effective September 25, 1991. It is recommended that the toxicity characteristic be described in terms of TCLP rather than ep toxicity.

At the time the document was originally drafted, about 10 months ago, the EP toxicity was the valid toxicity test. The argument presented in the document does not address EP toxicity test results but points out which parameters may exceed test limits for toxicity. The FFA specifically requires a description of the hazardous characteristics of the waste, but does not specify a definition of hazardous. Considering the FFA default definitions originate from RCRA regulations, the PE chose EP toxicity characteristics terms to describe the waste. If the document were rewritten, hazardous characteristics can be described in terms of TCLP terms. As agreed to at the meeting, no change to the document will be made.

2. Section 3.1.6 - This section indicates that Department of Energy plans to request Type I secondary containment be approved as equivalent devices. The purpose of this assessment report is to provide demonstrations that the F and H-Area tanks meet secondary containment requirements presented in the FFA or integrity assessment demonstrates the soundness of the primary vessel. If neither is to be done for the Type I tanks, at the least, it is recommended that this report include information that attests to the equivalency of the Type I secondary containment system.

The FFA outlines performance requirements of secondary containment and specifies system design requirements that can adequately meet the performance requirements. An equivalent device is one of the specific items but has no details of design requirements. An equivalent device design option is meant to give SCDHEC some flexibility to allow different designs if they approve them as equivalent. The assessment report details all the secondary containment features, explains that the features meet all the performance requirements of the FFA, and would be secondary containment if approved as an equivalent device. The cover

letter requests approval as an equivalent device for the Type I Tanks that have not leaked, Tanks 2 - 8. The FFA does not require the PE to attest to the equivalency. Only after the equivalent device approval is obtained could one argue that another tank not previously assessed has the same approved equivalent device.

As agreed to at the October 15 meeting, the cover letter will be expanded to include a detailed explanation of why SRS believes that the secondary containment system should be approved as an equivalent device. The letter will include any additional evidence necessary to create a convincing argument.

3. <u>Section 3.5.1</u> - The drawings provided to illustrate the evaporator system are of a "typical" system. However, each existing evaporator system deviates from this typical scheme [in] various ways. It is recommended that drawings of each evaporator system be included and the drawings of a "typical" system be deleted.

This comment addresses editorial choice of the writer. This kind of typical engineering drawings are not unusual, especially when illustrating specific common features as these drawings do. Important aspects of the secondary containment features are presented including specific dimensions, but not the variations in process or equipment arrangement within the cells. These drawings have been reviewed for accuracy. As agreed to at the meeting, no change will be made to the document.

4. <u>Section 3.5.1</u> - The drawings of the typical evaporator are not drawn to scale which can contribute to misinterpretation. For example, the liner of the 242-H Evaporator is approximately 18 inches high while the evaporator enclosure is 30 feet high, but the drawings illustrates the liner as being approximately one-fifth of the height of the cell or approximately 6 feet high. It is recommended that evaporator systems be drawn to scale or clearer indications of horizontal and vertical scale be included.

This comment is similar in nature to item 3. The drawings are clearly marked not to scale and important dimensions are clearly labeled. As agreed to at the meeting, no changes will be made to the document.

5. <u>Section 3.5.5</u> - This section indicates that there have been no recorded leaks at any of the evaporator systems. However, a draft version of this report states that eight leaks have occurred at the evaporator systems. The FFA does not make a

distinction between recorded leaks and leaks, but requires that past leaks be described. It is recommended that this inconsistency be reviewed and the report revised as necessary.

This change was made because the draft reported on releases that were not associated with leaks to containment as defined by the FFA. The specific interpretation made as to what the term "leak" means appears in Section 2.4 as follows:

> **2.4 Past Leaks History**
>
> Section IX.A.2 of the FFA requires that a description of past leaks be included with the Wastewater Permit Application. Per the FFA, a leak is the escape of a hazardous substance from the primary or secondary containment. There are several mechanisms which can cause the escape of a hazardous substance from the tank system. These mechanisms include: corrosion, structural failure, ancillary equipment failure (including pumps, jumper gaskets, and valves), and spills/overflows due to operator error.
>
> Of the above mechanisms, the prevention of ancillary equipment failures and spills/overflows are addressed through maintenance, surveillance, and training programs. Should this type of escape occur, the tank system is normally taken out of service until the appropriate repairs are completed and are normally responded to in an immediate fashion. Since these type of escapes do not compromise the structural integrity of the tank systems, information regarding ancillary equipment failures and spills/overflows is not being provided in this Assessment Report.
>
> The escape mechanisms of corrosion and structural failure can compromise the structural integrity of the tank system and may cause a leak site to develop which is not immediately repaired. Nine waste tanks have developed leak sites due to stress corrosion cracking. Since many of these leak sites have not been repaired and could cause the escape of hazardous substances in the future, a description of these past leaks are provided in Section 3 of this report.

The essence of the definition associates a leak with breaches or failures in the structure of the containment systems and excludes releases caused by operational errors and support facilities. This interpretation is consistent with the usage in the FFA. By this interpretation no leaks have occurred and the document is correct as written. As agreed to at the meeting, no changes will be made to the document.

6. <u>Section 3.5.6</u> - This section indicates that the secondary containment of the 242-H Evaporator includes Tank 13 via a gravity drain line. Since the waste in the evaporator pot can be at any stage from free liquid to a thick concentrate that is normally transported by steam, it is recommended that demonstration that the gravity drain line is adequate for the transport of waste in the concentrate stage to Tank 13 be included. In addition, Tank 13 has a leak site, but procedural controls

are in place to maintain the liquid volume below the leak site. The report does not address if the safety margin maintained by the procedural control is of a capacity to contain the entire contents of the 242-H Evaporator pot. It is recommended that this section provide this information.

This comment addresses two issues. First, the comment asks for a demonstration that gravity drain line is adequate for transport of the evaporator contents, presumably because the concentrate may plug the line (the document already discusses waste compatibility). Since the gravity drain line is secondary containment, no demonstration was included. The FFA does not require such a demonstration on secondary containment (the FFA does require the secondary containment to be compatible with the waste). Moreover, transferring concentrated waste by gravity drain lines is common practice in the tank farms. The waste is relatively free-flowing, and although salt plugs have accumulated in lines over time, experience in the tank farm indicates that one time use to drain an evaporator should not cause a plug.

Second, the comment claims that the safety margin for the administrative controls was not demonstrated to be adequate for the purposes of secondary containment volume requirements. Considering the high operating volume of the evaporator is 1800 gallons, the high high volume is 2000 gallons, and Tank 13 holds 3500 gallons per inch, then about 0.57 inches of the tank is required for containment purposes. The PE certifying the document was familiar with our controls and concluded that the volume to be inconsequential to Tank 13. The controls are mentioned in this document and more precisely in the wastewater permit application, ie, maintaining the waste level at least 6" below the lowest leak site. The review will have all information at his disposal to make the same calculation and determination. If the reviewer does request more information, the information will be readily available. As agreed to at the meeting, no change will be made to the document.

7. <u>Section 3.7</u> - The leak detection information provided for each waste transfer line did not include schedules for ongoing demonstrations that the systems are not leaking (i.e., schedules for testing of the leak detection systems). It is recommended that these sections be revised to included schedules for the testing of leak detection systems.

The FFA does not require schedules for testing of leak detection system to be included in this document. Therefore, none were included. The FFA includes requirements for ongoing demonstrations that the tank systems are not leaking but only for systems that do not meet the secondary containment requirements. As agreed to at the meeting, no changes to the document will be made.

8. <u>Section 3.7.2.4</u> - This section indicates that leak detection systems for Type II and IIA transfer lines allow the detection and removal of accumulated liquids within 24 hours. However, Section 3.7.2.5 indicates that a 1989 leak in the H-CTS loop was due to a failure of the core and jacket lines was not detected by the leak detection system, but by radiation levels in the soil. According to the report, the 1989 leak is still being investigated. Therefore, the statement that attests to the ability of the leak detection system is questionable, until the investigation offers a evidence to the contrary.

This comment states correct facts about the document. However, since the leak investigation is continuing, no conclusions can be drawn to adequacy or inadequacy of the secondary containment. For example, one speculation claims that the containment jacket may have had a leak site before the core pipe which may allow all leaking waste to enter the soil. A program that Waste Management has started since the discovery of this leak requires periodic leak checking of the secondary containment on transfer line jackets. This program is beyond the basic requirements provided in the FFA, i.e. the FFA does not require leak checks of jackets, even though it's obvious that a failed jacket could cause a leak detection system to fail. The leak specified would probably have been discovered by this new program before it leaked any significant quantity of waste. The PE certifying the report certifies that the containment meets the requirements specified in the FFA. He is not required to address the adequacy of the FFA requirements to meet the needs to detect all possible releases. As agreed to at the meeting, no changes to the document will be made.

9. <u>Section 3.8</u> - A number of conclusions are drawn in the assessment of the diversion boxes without adequate supporting evidence. The following are offered as examples:

- *Section 3.8.2 states that the concrete inner surface of the unlined diversion boxes seems compatible with wastes. Objective evidence (e.g., visual inspection of the concrete surface) should be provided to support this conclusion.*

[3.8.2 Waste Compatibility

All of the waste streams managed in the F&H Area HLW Tank Farm are usually diverted and transferred through a DB. The constituents and characteristics of these wastes are contained in Attachment B. All of the stainless steel used for the secondary containment devices in the diversion boxes is 304L stainless steel. This type of steel seems to be compatible with the chemically controlled waste managed through the diversion boxes.

DOE is currently investigating the effects of chloride and halogen content of waste on stainless steel. This is not a major concern since the chloride and halogen content of the wastes managed in the F and H Area HLW Tank Farm is very low (see Attachment B). Current standard-operating procedures disallow use of any marking, packing, insulating, or wrapping material that contain any type of chloride or halogen to be used in contact with stainless steel used to contain waste. This restriction is a result of a study into the cause of a leak in a stainless steel pipe. The study showed that the tape used to wrap the pipe contained a polyvinylchloride resin. Due to high radiation fields and elevated temperatures, free chlorides were released and caused chloride stress cracking.

For the unlined DBs, the wastes seem to be compatible with the concrete inner surface of the DB. FDB1 gravity drains to the F-Area catch tank encasement. Once in the encasement, the liquid would be transferred via a jet pump to the catch tank itself. In addition, other diversion boxes have replaced most of the functions of FDB1. It is now seldomly used. The wastes also seem to be compatible with this concrete encasement.]

- *Section 3.8.5 discusses inleakage to diversion box FDB2. A number of official recommendations to prevent a recurrence of this inleakage were identified but no indication of whether these recommendations were carried out was included. Further, this inleakage was not detected until construction activities excavated soils adjacent to this diversion box. It is not apparent that the diversion boxes comply with requirement to detect and remove leakage and accumulated precipitation within 24 hours.*

[3.8.5 Past Leaks

The only information available describing a leak in a DB is in regard to FDB2. During construction excavation next to FDB2, a sample of ground water was taken. The analysis showed 2000 d/m/ml beta-gamma. Further sampling around the DB indicated that the contamination was confined to the East wall of FDB2. Inspection of the DB liner showed that it had separated from the concrete encasement. The largest separation was approximately 1 1/2 inches wide. The relatively low radiation count showed that the source of the leak was not fresh waste or concentrated supernate.

It was determined that the leak was a result of rainwater seeping through a crack in the DB cover. The water apparently ran down between the stainless steel liner and the concrete wall picking up small amounts of contaminants. It then leaked through the concrete encasement to the environment.

Small buckles in other areas of the stainless steel liner were observed. Visual inspections of the liner were inconclusive due to soiled conditions of the liner. Apparently no further leak tests were performed, however, as stated previously analytical results showed that leakage through the concrete encasement did not appear to be occurring at any other locations.

Official recommendations included providing a rain cover for the DB, cleaning the soiled liner and repeating the inspection for leaks, and repairing the separated liner.

No other leaks have been detected in any of the other DBs. There is evidence in some instances of inleakage of groundwater or precipitation. This inleakage to the secondary containment device (except for FDB2) has only been detected in the DBs that do not have stainless steel liners (FDB1, HDB1, HDB3). That is to say, since the concrete from which FDB1, HDB1 and HDB3 are constructed serves as the secondary containment, in leakage breaches the secondary containment device. In leakage to FDB1 gravity drains to the F-Area Catch Tank to facilitate removal of these liquids. HDB1 and HDB3 have liquid removal mechanisms capable of removing these liquids.]

This comment is similar in nature to the item 1 of the first set of comments. The specific examples illustrate the difficulty in performing this type of assessment on old facilities. For the first example, direct visual inspections are not possible. The engineer that performed the assessment considered the concrete compatible based on his knowledge of concrete. In a conversation with C. A. Langton of SRL, an "expert" on concrete properties, the concrete is chemically compatible if no deleterious reactions occur upon contact with the waste. The high pH waste will not cause gas evolution, exothermic reactions, or explosions (Durability of Concrete Construction, American Concrete Institute Monograph No. 4, 1968 and Durability of Building Materials and Components, Proceedings of the First International Conference, ASTM, 1980). Concrete in contact with high level salt waste could result in some degradation of the concrete under unique environmental conditions. The nature of this degradation would result in spalling (small pieces of concrete breaking out from the exposed surface). This type of damage has not been observed in photograpgic inspections of these facilities by the Waste Management Tank Inspection program.

For the second example involving FDB2, direct visual inspection by the PE is impossible. Photographs show only limited information. The PE must rely on documents we provide him to show the repair was completed. The nature of business at the SRS at the time of the repair did not create a paper trail to

demonstrate that any of the recommended repairs were completed. The only observable recommendation would be the rain cover, but we learned that the rain cover has been postponed several times because of the low priority it has for resources. Therefore, the PE was unable to state anything about the recommendations without risk. As agreed to at the meeting, no changes to the document will be made.

10. Section 4.5.5 - Neither a leak nor another integrity examination is provided in this section though it is indicated that the 242-H Evaporator hold tanks will undergo a leak test prior to returning them to service. Appendix B, Section A of the draft FFA requires the structural integrity assessment to include at a minimum, results of a leak test or another examination that addresses cracks, leaks corrosion, and erosion, and that documents the limits of the assessments techniques employed. It is recommended that this section be revised to include the results of an integrity assessment if a leak test is not available.

The leak test for the 242-H Evaporator hold tanks and other overheads process equipment will be conducted as part of the water run program awaiting approval by DOE. The compromised reached with the PE was to write the document with the commitment to perform the leak test. Documentation of the results will be offered to SCDHEC as part of the first annual assessment submittal. As agreed to at the meeting, the transmittal letter will be revised to explain this plan.

11. Section 4.5.5 - This section indicates DOE is reviewing a daily inspection plan. It is assumed that this daily inspection plan is the method to be used as the ongoing demonstration that the hold tanks are not leaking. Such a demonstration and a schedule are requirements of the FFA. To satisfy the requirements in the FFA, it is recommended that the daily inspection plan be described.

The daily inspection is not meant to satisfy the FFA requirement for an ongoing demonstration that primary containment is not leaking. The FFA does not require that the assessment address the schedule nor is it prudent to allow the PE that prepares the assessment to commit DOE to a schedule. The document does describe the proposed demonstrations and limitation of the demonstrations as required by the FFA. The daily inspection is discribed with an operators checkoff in WMO Procedure 241-H-903, Manual SW1.7, Revision 32 (appropriate page from procedure attached).

4.13 EVAPORATOR 1H LOGSHEET (OUTSIDE READINGS)

		TANK 32 CRC COLUMN PRESSURE, PSIG		
		INLET	OUTLET BEFORE FILTER	OUTLET AFTER FILTER
NORMAL RANGE	HI	30	15	15
	LO	2	2	2
ALARM POINT	HI	-	-	-
	LO	-	-	-
TIME				
7 PM				
9 PM				
11 PM				
1 AM				
3 AM				
5 AM				
7 AM				
9 AM				
11 AM				
1 PM				
3 PM				
5 PM				
DO NOT READ IF CRC IS ALSO DOWN				

	Night	Day
OPERATOR'S INITIALS		

[NOTE: The High Alarm set point for the CRC Pump Tank is 85%.]

* EVAPORATOR, CRC AND CTS INSPECTION

Inspect, each shift, the entire external inspectable portions of the 1H evaporator, CRC, CTS, and the area immediately surrounding them, paying special attention to critical areas where waste can reach the surface. Look for wet spots, liquid seeping up through the pavement, or other evidence of leakage (including steam leaks); also look for torn insulation or deterioration of flushwater lines that could lead to leakage. Report any unusual conditions to supervision. This inspection is required by RCRA regulations.

EXTERNAL INSPECTION OF EVAPORATOR AND CTS COMPLETED. (DAY SHIFT)

	Night	Day
OPERATOR'S INITIALS		

CC: M. C. Chandler, 703-H
P. D. d'Entremont, 703-H
M. A. Hunter, 703-H
C. R. Hayes, 703-18A
C. A. Langton, 773-43A
C. Blair-McManus, DOE-High Level Waste, 703-H
W. H. Rice, DOE-ED, 703-41A
M. P. Prater, DOE-ED, 703-41A
WMT Files, 703-H
File Code: 175.15

W0517

INTER-OFFICE MEMORANDUM
Savannah River Site

Date: 23-Oct-1991 03:16pm EDT
From: Jeff Pike
PIKE-JA-Y5547 AT A1 AT SASRS2
Dept: WMT
Tel No: x7-8843

TO: Charles R. Hayes (HAYES-CR-Z9722 @A1@SLSRP1)

Subject: ITP Startup Date verses Wastewater Permit

I have learned from reliable sources that the ITP schedule is being unofficially estimated for radioactive operations in June, 92, or shortly there after. We asked the state for the ITP portion of the wastewater permit first because we intended to startup in Dec., 91, or Jan., 92. I want you to know the latest dates if SCDHEC asks and to keep from over emphasizing the startup date to the state. Dan Dunaway frequently advised against pressing the state hard if there was no likelihood of startup in Dec.

In addition, if there is ever any communication about the wastewater permit application or status in the future, please include Matt (M. A.) Hunter as a primary addressee. He is taking over most of the WM work on the permit. He will be the primary person responsible for working up responses to the anticipated comments from SCDHEC. I will still be involved as the primary person until the Phase II Tank Assessment has been submitted to SCDHEC and EPA.

s always, if you have any question, please call me at 7-8843.

OFFICIALLY. FEB OR MARCH

PROBABLY WILL BE PUSHED BACK TO JUNE.

ER : COVER LETTER (NEED TO LOOK AT)

W-0517

Westinghouse
Savannah River Company

P.O. Box 616
Aiken, SC 29802

ESH-FSG-910791

October 4, 1991

Mr. M. F. Sadler, Director
Industrial and Agricultural Wastewater Division
South Carolina Department of Health
and Environmental Control
2600 Bull Street
Columbia, South Carolina 29201

Dear Mr Sadler:

F/H AREA HIGH LEVEL RADIOACTIVE WASTE (HLRW) TANK FARMS (U)

Please find enclosed a copy of a color HLRW process flow diagram to assist your staff in reviewing the subject construction permit application package. Larry Arrington expressed interest in the drawing during the August visit of the Tank Farm Facilities.

Please contact C. R. Hayes (725-8838) if there are any questions.

Yours very truly,

J. V. Odum, Manager
Facility Support Section
Environmental Protection Department

CRH:pr
Attachment

CC: R. K. Cauthen, SCDHEC, Lower Savannah District
C. Richardson, SCDHEC-Columbia
S. R. Wright, 703-41A

2

Mr. M. F. Sadler
ESH-FSG-910791
October 4, 1991

BCC: M. C. Chandler, 703-H
L. S. Coward, 703-18A
P. D. D'Entremont, 703-H
W. D. Dunaway, 703-18A
R. W. Harral, 703-H
M. Hawkins, 742-A
C. R. Hayes, 703-18A
W. F. Hindle, MDC-84
G. S. Hoover, 703-41A
B. L. Lewis, 703-H
J. A. Pike, 703-H
G. T. Wright, 703-H
Central Files, 703-A
EPD Fileroom, 742-A

ADDITIONAL COMMENTS ON ASSESSMENT REPORT PHASE II FOR THE F- AND H-AREA HIGH LEVEL RADIOACTIVE WASTE TANK FARMS

INTRODUCTION

The Savannah River Site has prepared Phase II of the Assessment Report for the F- and H-Area High -Level Radioactive Waste Tank Farms as required under the draft Federal Facility Agreement (FFA). The following comments are provided to supplement those provided September 30, 1991, and address primarily the waste characterization and secondary containment aspects of the Assessment Report.

COMMENTS

1. Section 3.1.2 and Section 3.2.2 - The hazardous characteristics of salt cake and sludge are described in terms of Extraction Procedure (EP) toxicity. The EP testing protocol was replaced with the Toxicity Characteristic Leaching Procedure (TCLP) for the toxic characteristic effective September 25, 1990. It is recommended that the toxicity characteristic be described in terms of TCLP rather than EP toxicity.

2. Section 3.1.6 - This section indicates that Department of Energy plans to request that Type I secondary containment be approved as equivalent devices. The purpose of this assessment report is to provide demonstrations that the F and H-Area tanks meet secondary containment requirements presented in the FFA or an integrity assessment demonstrates the soundness of the primary vessel. If neither is to be done for Type I tanks, it is recommended that this report at least include information that attests to the equivalency of the Type I secondary containment system.

3. Section 3.5.1 - The drawings provided for the evaporator system depict a "typical" system. However, each existing evaporator system deviates from this typical scheme is various ways. It is recommended that drawings of each evaporator system be included and the drawings of a "typical" system be deleted.

4. Section 3.5.1 - The drawings of the typical evaporator system are not drawn to scale, which can contribute to misinterpretation. For example, the liner of the 242-H Evaporator is approximately 18 inches high while the evaporator enclosure is 30 feet high, but the drawing illustrates the liner as being approximately one-fifth of the height of the cell or approximately 6 feet high. It is recommended that evaporator systems be drawn to scale or clearer indications of horizontal and vertical scale be included.

5. Section 3.5.5 - This section indicates that there have been no recorded leaks at any of the evaporator systems. However, a draft version of this report states that eight leaks have occurred at the evaporator systems. No distinction is made in the FFA between "recorded leaks" and "leaks"; it is merely stated in the FFA that "past leaks" be described. It is recommended that this inconsistency be reviewed and the report revised as necessary.

6. Section 3.5.6 - This section indicates that the secondary containment of the 242-H Evaporator includes Tank 13 via a gravity drain line. Since the waste in the evaporator pot varies from free liquid to a thick concentrate that is normally transported by steam, it is recommended that the document be revised to include a demonstration that the gravity drain line is adequate for the transport of waste in the concentrate stage to Tank 13. In addition, Tank 13 has a leak site, but procedural controls are in place to maintain the liquid volume below the leak site. The report does not address if the safety margin maintained by procedural control is of a capacity

2

to contain the entire contents of the 242-H Evaporator pot. It is recommended that this section provide this information.

7. Section 3.7 - The leak detection information provided for each waste transfer line did not includes schedules for ongoing demonstrations that the systems are not leaking (i.e., schedules for the testing of the leak detection systems). It is recommended that these sections be revised to include schedules for the testing of leak detection systems.

8. Section 3.7.2.4 - This section indicates that leak detection systems for Type II and IIA transfer lines allow the detection and removal of accumulated liquids within 24 hours. However, Section 3.7.2.5 indicates that a 1989 leak in the H-CTS loop due to a failure of the core and jacket lines was not detected by the leak detection system, but by radiation levels in the soil. According to the report, the 1989 leak is still being investigated. Therefore, the statement that attests to the ability of the leak detection system is questionable, until the investigation offers evidence to the contrary.

9. Section 3.8 - A number of conclusions are drawn in the assessment of the diversion boxes without adequate supporting evidence. The following are offered as examples:

   • Section 3.8.2 states that the concrete inner surface of the unlined diversion boxes seems compatible with the wastes. Objective evidence (e.g., visual inspection of concrete surfaces that have contacted similar wastes) should be provided to support this conclusion.

   • Section 3.8.5 discusses inleakage to diversion box FDB2. A number of official recommendations to prevent a recurrence of this inleakage were identified but no indication of whether these recommendations were carried out was included. Further, this inleakage was not detected until construction activities excavated soils adjacent to this diversion box. It is not apparent that the diversion boxes comply with the requirement to detect and remove leakage and accumulated precipitation within 24 hours.

10. Section 4.5.5 - Neither a leak test nor another integrity examination is provided in this section, though it is indicated that the 242-H Evaporator hold tanks will undergo a leak test prior to returning them to service. Appendix B, Section A of the draft FFA requires the structural integrity assessment to include, at a minimum, results of a leak test or another examination that addresses cracks, leaks, corrosion, and erosion, and that documents the limits of the assessments techniques employed. It is recommended that this section be revised to include the results of an integrity assessment if a leak test is not available.

11. Section 4.5.5 - This section indicates DOE is reviewing a daily inspection plan. It is assumed that this daily inspection plan is the method to be used as the ongoing demonstration that the hold tanks are not leaking. Such a demonstration and a schedule are requirements of the FFA. To satisfy the requirements in the FFA, it is recommended that the daily inspection plan be described.

REVIEW
CONCUR
FULFILLS WORKSCOPE
SOUNDNESS OF RESULTS
COMMUNICATION EFFECTIVENESS

COMMENTS ON THE F- AND H-AREAS HIGH LEVEL RADIOACTIVE WASTE TANK FARMS ASSESSMENT REPORT PHASE II

INTRODUCTION

One of the requirements of the Federal Facilities Agreement (FFA), (Docket No. 89-05-FF), Section IX, is the preparation and submittal of an Industrial Wastewater Permit Application for the F- and H-Areas High Level Waste (HLW) Tank Farms. A Tank Assessment Report is to be developed to address tank secondary containment and leak detection. This assessment is to cover the following:

- An evaluation of secondary containment devices to determine if they meet the standards in Appendix B, Subsection C of the FFA
- A description of leak detection inspection/methods
- A documentation of past leaks
- Design and construction information for those waste tank systems which do not meet secondary containment standards

The Phase II report has been reviewed and the following comments are provided.

GENERAL COMMENTS

1. The statement "Based on the information provided by U.S. Department of Energy (DOE)" appears a number of times throughout the document. The remainder of the statement then simply says that such-and-such a system complies with the requirements of secondary containment. However, the reviewer has no means to decide whether this is true. South Carolina Department of Health and Environmental Control (SCDHEC) will require an adequate explanation to make a decision whether or not this document fulfils the FFA requirement. Thus, more data should be included in order for the reviewer to decide if the assessment is complete and adequate.

2. The statement "DOE is investigation options" frequently appears throughout the document. It is conjectured that SCDHEC will require an explanation of the options rather than this generalized statement. The options should be detailed in the document.

3. The statement "Seem to be adequate" appears throughout the document and is ambiguous. The condition is either adequate or not and should be so stated.

4. There are a number of grammatical errors in the document. A technical editor should review the document prior to submittal to SCDHEC.

SPECIFIC COMMENTS

5. Page xvii, Diversion Boxes - The third sentence refers to a detailed explanation of the use of diversion boxes which is included in the Wastewater Permit Application for the F- and H-Area HLW Tank Farm. The SCDHEC reviewer may not have seen the wastewater application or may have trouble locating it. It would be advisable to at least summarize the use of the diversion boxes in this section.

6. Page 84, 242-164 - This replacement page is missing the last five lines from the original page. Thus, the page ends with an incomplete statement and the full meaning of this section is incomplete.

7. Page 89, Section 3.6.2 Waste Compatibility - This replacement page is missing the last six lines from the original page. Thus, the page ends with an incomplete sentence and thought. This discrepancy needs to be resolved.

8. Page 113 - This is a replacement page. However it is obvious that information has been dropped from the original page. This discrepancy should be resolved.

   On the old page, in section 3.7.3.3, the last sentence reads "... hydrogeologic preserves...". This should read "... hydrogeologic pressures...".

9. Page 120 - This is a replacement page which bears no resemblance to the original page and omits at least half of the original content. This discrepancy should be resolved.

10 Page 127 - This page is missing from the review copy.

OSR 24-A11

BSPC

DON'T SAY IT—WRITE IT

TO Chuck Hayes

DATE 9/16/91

AT 703-18A

FROM Jeff Pike

5 BLUE LINE COPIES OF TANK USAGE DRAWING ATTACHED.

INTER-OFFICE MEMORANDUM
WESTINGHOUSE SAVANNAH RIVER COMPANY

September 6, 1991 NMP-WMT-910873

To: Monte Hawkins, 742-A
B. M. Lawrence, 742-A

From: M. B. Birk, 703-H

Position on best option
add to WW
??

Management of Chromate Water Drain Tanks

Summary

Following our discussion concerning the chromate water drain tanks located on the F and H Tank Farms, I have reviewed the present management of the tanks and have identified improvements that should be made to ensure compliance with RCRA regulations. The following provides a summary of the applicable regulations and the status of the tanks. Please review and respond to the interpretations and assumptions listed below as soon as possible so that appropriate modifications to operating practices can be made.

Discussion

The tanks are part of a secondary containment system for the Tank Farm process to prevent release of a hazardous material to the environment. Material that enters the tank is chromate water (400-750 ppm chromate) that either leaks from the pumps in the pumphouse or overflows from the chromate water surge tank. When the chromate water in the tanks reaches a level of 55 inches (approximately 675 gallons) an alarm sounds in the control room and the contents of the tank are pumped to a permitted waste tank. The present pumping system has the capacity to lower the level to a minimum of 17 inches (approximately 200 gallons). If the level were to be lowered further, the pump would lose its prime and fail. Although the RCRA regulations do not adequately address the management of process sumps, we recognize that current management of the tanks is less than adequate in meeting the intent of the regulations. Therefore we will be making a recommendation to replace the present pumps with submersible pumps that will empty the tanks more effectively. Additional recommendations will be made concerning routine inspection of the tank levels and timely emptying of the tank following a significant addition of chromate water.

Because the tanks are part of a secondary containment system, I have listed below my interpretation of how each section of SCHWMR R.61-79.265 Subpart J applies to these tanks.

> Part 265.190(b) exempts the tanks from section 265.193(a) which requires secondary containment.

Part 265.191 refers to tanks that do not have secondary containment as required in Part 265.193. Since the tanks are not required to have the secondary containment in Part 265.193, this section does not apply.

Part 265.192 refers to new tank systems and does not apply.

Part 265.193(a) states requirement for secondary containment and the tanks are exempt as stated above. Part 265.193(b-f) describe the secondary containment requirements and does not apply.

Part 265.194 applies to the chromate water tanks.

(a) The chromate water is not corrosive.

(b) Improvements in operation will prevent overflows and spills. The tanks are of sufficient size that an overflow is unlikely. The tank is equipped with level sensing devices.

(c) Routine monitoring of level will detect a leak. The tank will have to be shut down immediately if this occurs.

Part 265.195 describes daily inspection requirements. Those applicable to these tanks include: 1) inspection of any exposed portions of the system and immediate area to detect signs of corrosion or release of waste; 2) inspection of overfill/spill control equipment; and 3) documentation of inspection. These items will be added to the daily runbook as soon as possible.

Part 265.196, Response to leaks or spills. This section will be applied if a leak or spill is detected.

Part 265.197, Closure and Post-closure. This section will be applied when the tanks are closed.

Part 265.198, Special requirements for ignitable or reactive waste. The chromate water is not ignitable or reactive.

Part 265.199, Special requirements for incompatible waste. Does not apply, only chromate water waste enters the tanks.

Part 265.200, Waste analysis and trial tests. Does not apply, composition of waste is known.

Part 265.201, Requirements for small quantity generators. Does not apply.

If a spill occurs in either the west pumphouse or the east pumphouse on the H-Tank Farm, the chromate water is pumped from the capped drain into drums that are then poured into the floor drain in the 42H pumphouse that leads to the chromate drain tank. Procedures will require that the drain tank be emptied as soon as possible after this occurs to ensure that this practice is not interpreted as waste storage.

These tanks are not addressed as part of the wastewater treatment process in the application for a wastewater permit for the Tank Farms. I am assuming that since the process is generating a hazardous waste that is not directly related to the wastewater that is entering the wastewater treatment facility, this waste stream will remain under RCRA regulations until it is pumped to the waste tank.

MBB

CHROMATE WATER DRAIN TANK

* DENOTES REVISION TO THIS DPSOL

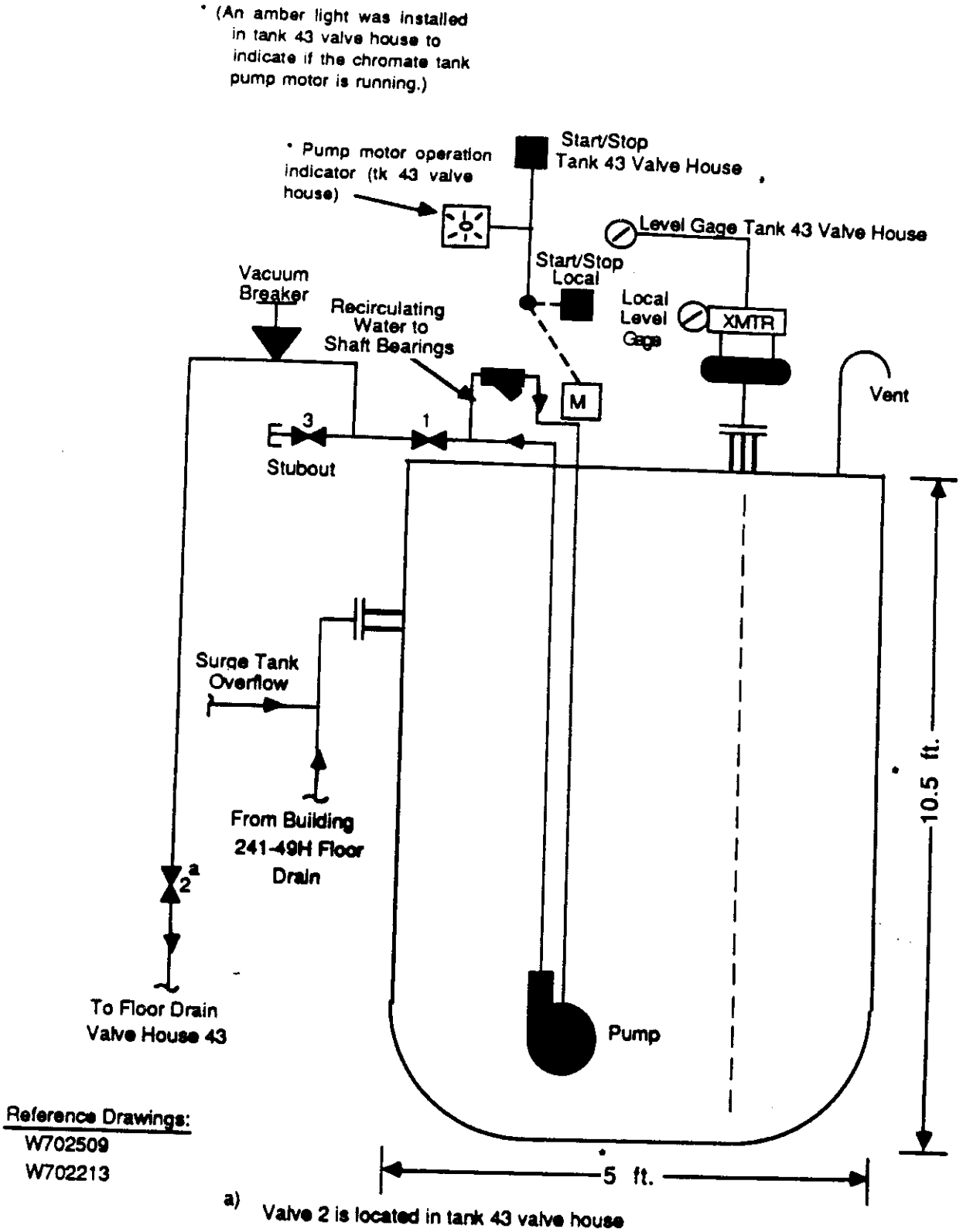

Reference Drawings:
W702509
W702213

a) Valve 2 is located in tank 43 valve house

INTER-OFFICE MEMORANDUM
Savannah River Site

Date: 10-May-1992 02:07pm EDT
From: Matthew A. Hunter
HUNTER-MA-L2335
Dept: WMT
Tel No: x7-1447

TO: Mike Rea (REA-MJ-08913)

CC: Robert W. Wilson (WILSON-RW-T4847)
CC: Mario A. Ceravolo, 703-H (CERAVOLO-MA-07495)
CC: Thomas B. Caldwell (CALDWELL-TB-Y6683)

Subject: RE: Chromate Drain Tank

Mike,

I know my attendance at the morning meetings have been lax, this will be fixed. I had gotten tied up in this wastewater stuff and lost sight of my responsibilities.

The regulatory requirements for these tanks are explained in a memo, NMP-WMT-910873, M.B. Birk to M Hawkins and B.M. Lawrence. But in a nut shell, the drain tanks are secondary containment for the pump houses themselves and as such are regulated under R.61-79.265.193, which spells out the secondary containment standards. The tanks do meet these standards. Where we get caught is my part 265.196 (b) (2). This states that once there is a leak, within 24 hours, the secondary containment should be emptied of any material. This can only be partially accomplished with the existing pumps. RCRA further defines "empty" in part 261.7 (b) (1). Which states that a container of over 110 gallon capacity should contain no more that 0.3 percent by weight of the total capacity of the container or no more than one inch of residue. Since the tanks can hold 1536 gallons, only 4.6 gallons can remain as residue. This is why a submersible pump is needed. It is realized that even if a sub-pump is used it may not be able to empty the tanks down to this level. However, we could then document that the emptying was being done to the best of our ability, this would satisfy the regulators.

INTER-OFFICE MEMORANDUM
Savannah River Site

Date: 18-May-1992 01:10pm EDT
From: Matthew A. Hunter
HUNTER-MA-L2335
Dept: WMT
Tel No: x7-1447

TO: See Below

Subject: Chromate Drain Tanks

This is a recap and revision to the information already sent.

The regulatory requirements for these tanks are explained in a memo, NMP-WMT-910873, M.B. Birk to M Hawkins and B.M. Lawrence. But in a nut shell, the drain tanks are secondary containment for the pump houses themselves and as such are regulated under R.61-79.265.193, which spells out the secondary containment standards. The tanks do meet these standards. Where we get caught is my part 265.196 (b) (2). This states that once there is a leak, within 24 hours, the secondary containment should be emptied of any material. This can only be partially accomplished with the existing pumps. RCRA further defines "empty" in part 261.7 (b) (1). Which states that a container of over 110 gallon capacity should contain no more that 0.3 percent by weight of the total capacity of the container or no more than one inch of residue. Since the tanks can hold 1536 gallons, only 4.6 gallons can remain as residue. This is why a submersible pump is needed. It is realized that even if a sub-pump is used it may not be able to empty the tanks down to this level. However, we could then document that the emptying was being done to the best of our ability, this would satisfy the regulators. NOTE: This system will still be under RCRA regulation after the wastewater permit is signed and the tank farms are withdrawn from RCRA This is because the system is not included in the scope of the permit application or the tank systems listing in the Appendix B to the FFA.

Distribution:

TO:	Mike Rea	(REA-MJ-08913)
TO:	Robert W. Wilson	(WILSON-RW-T4847)
TO:	Mario A. Ceravolo, 703-H	(CERAVOLO-MA-07495)
TO:	Thomas B. Caldwell	(CALDWELL-TB-Y6683)
TO:	Karen F. Lesko	(LESKO-KF-07041)
TO:	Brenda L. Lewis	(LEWIS-BL-06503)
CC:	Kim S. Wierzbicki	(WIERZBICKI-KS-06535)

INTER-OFFICE MEMORANDUM
Savannah River Site

Date: 08-Jun-1992 04:08pm EDT
From: Mike Rea
REA-MJ-08913
Dept: WMT
Tel No: 7-1796, bp#3108

TO: See Below

Subject: Chromate Drain Tanks

According to the operators, each time they empty the chromate drain tank, approximately 8 inches (98 gallons) of drain back is experienced. This is because all of the liquid up to the vacuum breaker drains back into the drain tank when the pump is turned off. According to the prints, there isn't a check valve in the pump discharge line to prevent drain back (assuming it held). We can install a check valve to minimize the drain back but this will still not be enough to meet the requirement as stated in R.61-79.265.193 (since min tank heel is 200 gallons). Even if we spend the time and money to install a submersible pump in the tank, we will reduce the minimum volume in the tanks but will most likely not remove all but 4.6 gallons as required. It looks as though we are going to have a tough time meeting this requirement. Do you have any ideas as to what to do?

Distribution:

TO:	Matthew A. Hunter	(HUNTER-MA-L2335)
CC:	Robert W. Wilson	(WILSON-RW-T4847)
CC:	Mario A. Ceravolo, 703-H	(CERAVOLO-MA-07495)
CC:	Thomas B. Caldwell	(CALDWELL-TB-Y6683)
CC:	Karen F. Lesko	(LESKO-KF-07041)
CC:	Brenda L. Lewis	(LEWIS-BL-06503)
CC:	Kim S. Wierzbicki	(WIERZBICKI-KS-06535)

DON'T SAY IT - WRITE IT

DATE: 7/17/92

TO: MARCIA BIRK, 703-H

FROM: MONTE HAWKINS, 742-A MH

CHROMATED WATER BUILDING DRAIN SUMP

Attached is a copy of the September 2, 1988 Federal Register. The language on page 34080 seems to support a position that if the sump is a part of a Wastewater Treatment Unit that it would not be subject to RCRA. Therefore once the tank farm is under wastewater, assuming that the chromated cooling water system is ancillary equipment, then I believe we are OK as you are currently operating. In the meantime, I believe the way you are using the sump makes it a hazardous waste storage tank much like 299H. I'll be gone from July 17-27. We can discuss when I get back or you can contact Jill Suhm at 5-1793. Jill is aware of the situation.

cc: J. V. Odum, 742-A
B. M. Lawrence, 742-A
Bill Maloney, 742-A
Jill Suhm, 742-A

74:26 is given with the understanding that the State will revise as necessary its regulations to comply with Federal requirements after the decision in the *NRDC* v. *Thomas* remand is made. Today's action approves revisions to the existing NSR program.

EPA finds good cause exists for making the action taken in this notice immediately effective because the implementation plan revisions are already in effect under State law or regulation. EPA's approval poses no additional regulatory burden.

Under 5 U.S.C. 605(b), I certify that this SIP revision will not have a significant economic impact on a substantial number of small entities. (See 46 FR 8709.)

Under section 307(b)(1) of the Clean Air Act, petitions for judicial review of this action must be filed in the United States Court of Appeals for the appropriate circuit by November 1, 1988. This action may not be challenged later in proceedings to enforce its requirements. (see 307(b)(2).)

The Office of Management and Budget has exempted this rule from the requirements of section 3 of Executive Order 12291.

List of Subjects in 40 CFR Part 52

Air pollution control, Particulate matter, Sulfur oxides, Incorporation by reference.

Note: Incorporation by reference of the State Implementation Plan for the State of South Dakota was approved by the Director of the Federal Register on July 1, 1982.

Date: August 18, 1988.

Lee M. Thomas,

Administrator.

Part 52 Chapter I, Title 40 of the *Code of Federal Regulations* is amended as follows:

PART 52—[AMENDED]

Subpart QQ—South Dakota

1. The authority citation for Part 52 continues to read as follows:

Authority: 42 U.S.C. 7401-7642.

2. Section 52.2170 is amended by adding paragraph (c)(11) to read as follows:

§ 52.2170 Identification of plan.

* * * * *

(c) * * *

(11) On January 28, 1988, the Governor submitted a plan revision (1) updating citations to Federal regulations in the South Dakota air pollution control regulations (Administrative Rules of South Dakota 74:26), (2) adopting new ambient air quality standards for particulates (PM_{10}), (3) revising the State administrative procedures for handling permit hearings and contested cases, and (4) correcting deficiencies in the stack height regulations.

(i) Incorporation by reference

(A) Revisions to the Administrative Rules of South Dakota (ARSD) 74:26:01:12, ARSD 74:26:01:35, ARSD 74:26:01:37, ARSD 74:26:01:64, ARSD 74:26:08 through ARSD 74:26:23, inclusive, and addition of a new section, ARSD 74:26:02:35, were revised through November 24, 1987.

3. Add a new § 52.2180.

§ 52.2180 Stack height regulations.

The State of South Dakota has committed to revise its stack height regulations should EPA complete rulemaking to respond to the decision in *NRDC* v. *Thomas*, 838 F.2d 1224 (DC Cir. 1988). In a letter to Douglas M. Skie, EPA, dated May 11, 1988, Joel C. Smith, Administrator, Office of Air Quality and Solid Waste, stated:

"* * * We are submitting this letter to allow EPA to continue to process our current SIP submittal with the understanding that if EPA's response to the NRDC remand modifies the July 8, 1985 regulations, EPA will notify the State of the rules that must be changed to comport with the EPA's modified requirements. The State of South Dakota agrees to make the appropriate changes."

[FR Doc. 88-19165 Filed 9-1-88; 8:45 am]

BILLING CODE 6560-50-M

[FRL 3436-7]

40 CFR Parts 260, 264, 265, and 270

Hazardous Waste Management System; Standards for Hazardous Waste Storage and Treatment Tank Systems

AGENCY: U.S. Environmental Protection Agency.

ACTION: Final rule.

SUMMARY: The U.S. Environmental Protection Agency (EPA) is today providing an interpretation of certain terms and provisions, and correcting typographical and other errors, that originally appeared in the revised final standards for hazardous waste tank systems (51 FR 25422, July 14, 1986). These interpretations and amendments are being made in response to litigation and numerous inquiries that the Agency has received on certain aspects of the final rule.

EFFECTIVE DATE: September 2, 1988.

FOR FURTHER INFORMATION CONTACT: The RCRA/Superfund Hotline, (800) 424-9346 (in Washington, DC, call (202) 382-3000)), or William J. Kline, (202) 382-7917, Office of Solid Waste (OS-322), U.S. Environmental Protection Agency, 401 M Street SW., Washington, DC 20460.

SUPPLEMENTARY INFORMATION:

Table of Contents

I. Background
II. Discussion of Issues Requiring Interpretation
A. Scope of the Exemptions for Wastewater Treatment/Elementary Neutralization Tank Systems
1. Effect of Revised Tank System Standards on Wastewater Treatment/Elementary Neutralization Units
2. Clarification of "Wastewater Treatment Unit"
B. Issues Regarding the Secondary Containment Requirements
1. Welded Flanges
2. Applicability of Exemption for Certain Types of Joints and Connections
a. Plastic Piping Connections
b. Tubing Connections
i. Soldered and Brazed Joints
ii. Compression Fittings
iii. Flared-Fitting Joints
3. Exemption of Aboveground Sealless Valves
4. Extent of Required Leak Detection
5. Requirements for Concrete Liners
6. Secondary Containment of Pressurized Piping with Automatic Shut-off Devices
C. Application of Immediate Response Exemption to Sumps
III. Correction of Typographical Errors
IV. Compliance with Administrative Procedure Act Requirements

I. Background

On July 14, 1986, EPA issued a final rule that revised the standards for hazardous waste storage and treatment tank systems (51 FR 25422). Since then, the Agency has received requests for interpretation of a number of terms or provisions of the final rule, and has found several typographical errors in the rule. In addition, the revised tank system standards were challenged by industry petitioners in *Edison Electric Institute (EEI), et al.* v. *U.S. EPA*, No. 86-1549 (D.C. Circuit). This notice provides additional interpretation and clarification of the final rule, both in response to public inquiry and in settlement of the *EEI* litigation. This notice also corrects a number of typographical errors.

II. Discussion of Issues Requiring Interpretation

Three major areas of the final rule require further clarification: (1) The exemptions for wastewater treatment systems and elementary neutralization tank systems, (2) issues concerning secondary containment requirements, and (3) the applicability of the immediate response exemption under 40 CFR 265.1(c)(11) and 270.1(c)(3).

EPD FILE COPY

A. Scope of the Exemptions for Wastewater Treatment/Elementary Neutralization Tank Systems

1. Effect of Revised Tank System Standards on Wastewater Treatment/Elementary Neutralization Units

On November 17, 1980, EPA promulgated an amendment to the hazardous waste standards that suspended applicability of the requirements in 40 CFR Parts 122 (now codified in Part 270), 264, and 265 to owners and operators of wastewater treatment tanks and elementary neutralization tanks (45 FR 76074).

In the July 14, 1986, revised standards for hazardous waste tank systems (51 FR 25422), the Agency, in response to evidence indicating a high incidence of failures in piping and other equipment ancillary to tanks, made a special effort to focus on the proper management of such equipment. Thus, all equipment that is ancillary to the tank and used "to distribute, meter, or control the flow of hazardous waste from its point of generation to a storage or treatment tank(s), between hazardous waste storage and treatment tanks to a point of disposal on-site, or to a point of shipment for disposal off-site" was made subject to the revised standards (see definition of "ancillary equipment", 40 CFR 260.10). EPA used the term "tank system" to emphasize that both the tank and its ancillary equipment must be managed in accordance with the revised standards. EPA has received several inquiries regarding the extent to which the term "tank system" might result in previously exempt wastewater treatment/neutralization tanks being regulated by the revised hazardous waste tank system standards.

In the July 14, 1986, rulemaking, the Agency had no intention of altering the scope of the November 17, 1980, exemption for such units as provided under 40 CFR 264.1(g)(6), 265.1(c)(10), and 270.1(c)(2)(v) by subjecting the ancillary equipment of such exempt tanks to regulation. EPA attempted to make this point clear in the preamble of the revised standards (see 51 FR 25462). However, numerous parties believe the preamble language is still ambiguous. This ambiguity was also an issue in the *EEI* litigation. To add to the confusion of the status of these exemptions, EPA inadvertently neglected to amend the 40 CFR 260.10 definitions of "elementary neutralization unit" and "wastewater treatment unit" to reflect the Agency's intent to address hazardous waste tank systems, rather than simply hazardous waste tanks. In this notice, EPA corrects this oversight.

In order to remove any remaining ambiguity over this issue, EPA is today amending the wastewater treatment and elementary neutralization unit definitions to clarify that the exemptions apply to the tank systems, not just the tank. The only additional equipment intended to be covered under the revised standards was ancillary equipment that is associated with a regulated hazardous waste storage or treatment tank.

Thus, if a wastewater treatment or elementary neutralization unit is not subject to the RCRA Subtitle C hazardous waste management standards, the ancillary equipment connected to the exempted unit is likewise not subject to the Subtitle C standards. Similarly, the exemptions apply to sumps that meet the definition of a tank in 40 CFR 260.10 and that are used for the purpose of conveying hazardous wastewater to an exempted wastewater treatment or elementary neutralization unit (including conveyance by way of intermediate sumps, tanks, and holding ponds) since such sumps are ancillary equipment to the exempted tanks. Also, the revised hazardous waste tank system standards do not apply to ancillary equipment that is associated with hazardous waste management units other than storage or treatment tanks (*e.g.*, surface impoundments).

2. Clarification of "Wastewater Treatment Unit"

One of the conditions under 40 CFR 260.10 for qualifying as a wastewater treatment unit is that the unit must be part of a wastewater treatment facility that is subject to regulation under either section 402 or section 307(b) of the Clean Water Act. EPA has received numerous inquiries regarding the meaning of the term "wastewater treatment facility."

Based on EPA's property-boundary interpretation of the term "facility" under RCRA and the purpose of the exemption, which is to exclude tank systems subject to regulation under the Clean Water Act, it is EPA's position that in order for a wastewater treatment unit to be covered by the exemption, it must be part of an on-site wastewater treatment facility. Accordingly, any hazardous waste tank system that is used to store or treat the wastewater that is managed at an on-site wastewater treatment facility with an National Pollution Discharge Elimination System (NPDES) permit or that discharges to a Publicly Owned Treatment Works (POTW), is exempt from the RCRA regulations. Whether the wastewater is conveyed from the tank system directly to the treatment unit or indirectly by way of intermediate sumps, tanks or holding ponds does not affect the applicability of the exemption. For example, this exemption would apply if a sump is used to collect the rinse from periodic cleaning of utility boilers and this wastewater is then conveyed to a wastewater treatment unit at the same facility. Also, the means of conveyance of the waste between storage and treatment does not affect the applicability of this exemption. The applicability of the exemption does not depend on whether the wastewater is piped or trucked, or conveyed in any other manner to the wastewater treatment facility within the boundaries of the facility generating the wastewater. Likewise, the applicability of the exemption does not depend on whether the on-site wastewater treatment facility also treats wastewater generated off-site.

However, any tank system that was employed in managing wastewater at a facility prior to its off-site transfer to another location, whether or not the off-site location includes an NPDES permitted wastewater treatment facility, or a facility that discharges to a POTW sewer system, is not covered by this exemption.

EPA intends that this exemption apply to any tank system that manages hazardous wastewater and is dedicated for use with an on-site wastewater treatment facility. However, if a tank system, in addition to being used in conjunction with an on-site wastewater treatment facility, is used on a routine or occasional basis to store or treat a hazardous wastewater prior to shipment off-site for treatment, storage, or disposal, it is not covered by this exemption. Unless the tank system otherwise qualifies for some other exemption, it would be subject to the revised standards for hazardous waste tank systems.

A final clarification of this exemption concerns an on-site wastewater treatment facility that has no discharge to surface water. As previously stated in 45 FR 76078 (November 17, 1980), the wastewater treatment unit exemption is intended to cover only tank systems that are part of a wastewater treatment facility that (1) produces a treated wastewater effluent which is discharged into surface waters or into a POTW sewer system and therefore is subject to the NPDES or pretreatment requirements of the Clean Water Act, or (2) produces no treated wastewater effluent as a direct result of such requirements. This exemption is not intended to apply to wastewater

treatment units that are not required to obtain an NPDES permit because they do not discharge treated effluent.

B. Issues Regarding Secondary Containment Requirements

The Agency has also received numerous requests for interpretation of the regulatory provisions concerning the secondary containment requirements. The areas of confusion include; the meaning of welded flanges, the exemption for certain types of joints and connections, the exemption of above-ground sealless valves, the extent of required leak detection for concrete liners, and the secondary containment of pressurized piping with automatic shut-off devices.

1. Welded Flanges

The primary purpose of a flange is to enable connection of piping to vessels, pumps, valves, and other equipment. A flange connection provides an easy means of removing equipment from the pipe system for inspection, maintenance, repair, or replacement. Like other piping connections, flanges can be joined to piping by two basic techniques: threaded joints or metallurgical bonds (e.g., welds). If a piece of equipment is connected to piping by a threaded joint, it may be difficult to remove the equipment without disassembly of a portion of the piping system or without loosening other pipe-threaded connections. If the equipment is welded to the pipe, the pipe must be cut to remove the equipment. In contrast, equipment joined together with flanged connections can be easily removed by unbolting the flanges.

In §§ 264.193(f) and 265.193(f) of the revised hazardous waste tank system standards, EPA exempted welded flanges from the requirement to have secondary containment as long as the flanges were visually inspected on a daily basis. Numerous questions have been raised as to the intended meaning of the term "welded flange" because EPA did not define this term in the July 14, 1986, final rules. Apparently, several different meanings can be attributed to the term.

A term typically used in national piping codes, "welded flange" refers to welding only the piping to the flange. The flange-to-flange seal is achieved by mechanical seals, such as gaskets and o-rings. The flanges are usually held together by bolts. For a perfect seal, the bolt holes would have to be eliminated, and a circumferential weld made at the flange-to-flange joint. However, EPA is not aware of any national standards or codes that discuss this type of weld. And, most important, such a weld would defeat the purpose of the flange—i.e., to allow easy coupling and uncoupling of equipment from the piping system.

In exempting welded flanges from secondary containment, EPA intended to discourage the use of threaded joints, which EPA believes are susceptible to more frequent and larger quantities of releases than welded flanges. Threaded joints are used in metals where the walls are thick enough to withstand considerable pressure and corrosion after reduction in thickness due to threading. Threading is not a precise machining operation, and filler materials such as "pipe dope" are necessary to block the spiral leakage path.

Several characteristics of threaded joints make them more susceptible to leakage than welded flanges. Threads notch the pipe and reduce its strength and fatigue resistance. Enlargement and contraction of the flow passage at threaded joints creates turbulence. Thus, corrosion and erosion may be aggravated at the point where a pipe has already been thinned by threading. The tendency of pipe wrenches to crush pipes and fittings limits the torque available for tightening threaded joints thereby possibly excluding the necessary amount of tightening. For low-pressure systems, a slight rotation in the joint may be used to impart flexibility to the system, but this same rotation may cause leaks to develop in higher-pressure systems. In some metals, galling (i.e., a wearing down) occurs when threaded joints are disassembled.

Flanged joints come in a wide variety of types and facings. Welded-neck flanges provide joints as strong as the pipe under all types of static and cyclic loading. Slip-on, socket-weld, and lap-joint flanges provide joints as strong as the pipe under static loading but have lower resistance to cyclic stresses.

EPA realizes that flanged connections cannot be considered equivalent to an all-welded pipe system without flanges and will, therefore, pose a potential leak source. However, welded flanges eliminate, in EPA's opinion, the point of most probable leakage—i.e., the threaded pipe connection to the flange. With respect to potential leakage, flanges are superior to threaded connections because of the higher quality and more consistent workmanship and supervision associated with flange assembly and because of the inherent problems with threaded joints discussed above. While the flange-to-flange seals can leak, the occurrence of leakage from flanges is much lower than from threaded joints due to the larger seal surface area for the flange joint (a large surface on flange face versus a few sealing threads in the threaded connection). Also, with proper selection of bolt materials and washers, the mechanical seal can be kept under continuous compressive force, whereas the threaded joint relies on thread sealing compound to compensate for the contraction and expansion of the threaded joint. In any case, if a leak does occur in the mechanical seal it can be easily detected visually and corrected immediately.

Weld-neck and lap-joint flanges are preferable to socket-weld and slip-on flanges because they provide the greatest resistance to static stress. Socket-weld and slip-on flanges provide a lesser degree of structural integrity because the welds may eventually weaken, particularly from cyclical stress (vibration, hammering, opening/closing of valves, etc.). Nevertheless, EPA believes that any of these welded flanges, if properly specified, installed, inspected, and maintained in accordance with American National Standards Institute (ANSI), American Society for Testing and Materials (ASTM), and other piping component standards, and if properly managed in compliance with the revised hazardous waste tank system standards (e.g., compatibility, design certification, installation certification, inspections, and response to leak/spills), should pose a very low risk of leakage. For example, a properly designed piping system should take cyclical loading into account and use pulsation dampers, flex joints, expansion joints, etc., to eliminate or substantially minimize the effect of cyclical stresses. Thus, as specified on the revised tank system rules, the Agency believes secondary containment is not necessary for aboveground welded flanges (i.e., welded at the joint of the pipe to the flange) that are visually inspected on a daily basis. For the purpose of §§ 264.193(f) and 265.193(f) EPA interprets the term "Welded flange" to mean weld-neck, lap-joint, slip-on, and socket-weld flanges.

2. Applicability of Exemption for Certain Types of Joints and Connections

Since promulgation of the revised tank system standards, EPA has received numerous inquiries regarding the intended scope of the exemption from secondary containment for welded joints and welded connections. For example, inquirers have requested clarification on the applicability of this exemption to plastic piping connections, and compression, soldered/brazed and other tubing connections.

A wide diversity of joints/connections can be used in the construction of a hazardous waste tank system. Considering the broad spectrum of reliability that can be expected of the joint/ connection, given such variables as material of construction, method of joining, quality control of joint/ connection assembly, etc., the issue is which types of joints/connections are sufficiently "welded" so as to be exempt from the requirement of secondary containment.

In general, and as previously discussed, one of EPA's main concerns lies with threaded fittings and joints. As explained below, fittings and joints that avoid the inherent problems associated with threaded fittings and joints, and that thereby provide a more reliable connection, are the types of fittings and joints most likely to be considered "welded" (that is to say, permanently joined in such a fashion as to be comparable to welding in reliability) and thus eligible for exemption from the secondary containment requirement. This exemption is only applicable to aboveground piping systems that are visually inspected on a daily basis.

a. *Plastic piping connections.* Plastic pipe and fittings may be joined by a solvent-cement, by heat fusion, or by a mechanical device such as threads or a ring seal. A brief description of each type of joint is given below:

- Solvent cement softens the surfaces of the components, which then solidify as the solvent evaporates.
- With heat fusion, the surfaces are heated with special tools until they have softened. When engaged, the softened surfaces flow together, forming a joint as the material cools. There are three basic types of heat-fused joints: butt fused, socket or insert fused, and saddle fused.
- Mechanical means or devices can be used to develop a pressure seal. Types of mechanical joints include threaded joint, compression gasket joint, compression fitting joint, clamped insert-fitting joint, bell-and-spigot gasket or push-on joint, flanged joint, and flare joint.

Of all the joining techniques, solvent-cementing and heat fusion can be considered equivalent to welding in metal pipe systems. In both cases, the plastic is melted or "welded" together. The choice of the particular bonding depends on the type of plastic. Polyvinylchloride (PVC) and chlorinated polyvinylchloride (CVPC) pipes are solvent cemented, but polyvinylidene fluoride (PVDF) and polypropylene (PP) pipes require heat fusion, since they are not susceptible to solvent cementing. As with all joining techniques, the leak characteristics depend on the quality of workmanship involved. If the plastic components are properly joined, the risk of leakage should be the same as that of welded pipe.

According to ASTM standards, the pressure rating of solvent-cemented joints, properly fabricated, is equivalent to the pressure rating for the original pipe, after a reasonable time has been allowed for the joint to cure. The pressure rating of well-made, heat-fused joints is the same as the pressure rating for the original pipe after the material in the joint has cooled to the pipe temperature.

However, EPA notes that care must be taken in the selection and application of a particular plastic pipe. The pipe must be suitable for the internal fluid and the external conditions. For example, some pipes may need to be wrapped to prevent stress cracking from ultraviolet light.

Flared-tube joints, insert fittings, and threaded joints are not as reliable as heat fusion and solvent-cement joining techniques and have a greater incidence of leaks than do the welded pipes. Of these, threaded joints have the greatest likelihood of leaking, insert fittings the next greatest, and flared-tube joints the least likelihood of the three.

Depending on the type of material and/or the manufacturer, certain joining devices may lower the maximum pressure rating of the piping system. Typically, threaded and mechanical joints of particular plastics may lower the maximum pressure rating (of the pipe joined) by as much as 50 percent.

Given this information, EPA is convinced that solvent-cemented and heat-fused connections in plastic piping systems are analogous to welded metallic connections and should thus be considered "welded" for purposes of the exemption from secondary containment requirements under 40 CFR 264.193 and 265.193. Mechanical joints, however, would need secondary containment.

The methods used to join plastic pipes and fittings depend on the type of plastic(s) being joined. Applicable ASTM practices should be consulted to ensure that the method used is compatible with the materials being joined. In addition, the recommendations of the manufacturer should be considered when determining which method and the details of the procedure to be used.

The ASTM standards provide specifications, test methods, practices, and guides for plastic pipes and fittings made from these plastics. Plastic pipes and fittings made from several other types of plastic—most notably polypropylene (PP) and poly(vinylidene fluoride)(PVDF)—are commonly available in a wide variety of sizes. However, they are not covered as such by ASTM specifications.

b. *Tubing connections.* Since promulgation of the revised standards for hazardous waste tank systems, the Agency has received numerous questions concerning the equivalence of tubing components to all-welded piping. These components, used in making connections to valves, instruments, pressure gauges, and other ancillary devices, employ soldered and brazed joints, compression-fittings, and flared-fitting joints.

EPA does not have sufficient information to determine that these types of connections are equivalent to "welding" and thus is not exempting these connections from the requirement of secondary containment. The Agency believes that further consideration of an exemption for these connections is necessary and welcomes any data that addresses the reliability of these connections.

i. *Soldered and brazed joints.* Soldering is a metal-joining process wherein a nonferrous alloy is heated to a suitable temperature and fused to the metals being joined. The filler metal (solder) is distributed between closely fitted surfaces of the joint by capillary attraction. In general, solders are lead-tin alloys and may contain antimony, bismuth, and other elements.

Soldered joints are most widely used in pipe or tubing sizes 2 inches and smaller where the heat requirements are less burdensome. Properly made, the joints are completely impervious. Soldered joints should not be used in areas where plant fires are likely because exposure to fire rapidly and completely melts the joints. Nor should they be used where the pipe contains flammable or toxic fluids or where the piping is subject to thermal shock or mechanical vibrations.

Brazing is a metal-joining process wherein a nonferrous metal is heated to a suitable temperature and fused to the metals being joined. The filler metal is distributed between the closely fitted surfaces of the joint by capillary attraction.

Silver-brazed joints are similar to soldered joints, except they require a temperature of about 1100°F for fusion to occur. Silver-brazed joints are used where temperature or the combination of temperature and pressure is beyond the range of soldered joints. They are also more reliable in the event of plant fires and are more resistant to vibration.

Braze welding is a welding process using a nonferrous filler metal having a melting point below that of the base

metals, but above 800 °F (427 °C). The filler metal is not distributed in the joint by capillary attraction.

EPA believes that soldered and brazed fittings are not equivalent to welded piping. Regardless of how well these joints are made, they will continue to be a greater source of leakage than a welded connection, which has the strength of the pipe itself. However, if installed properly and within their design limitations, EPA believes that these joints have a very low risk of leakage. If a leak does occur, it should be visually detected in most circumstances, and tubing normally has a piping take-off valve for isolation. Tubing also generally has small bores so leaks will normally be minor, except in high-pressure service.

Although the Agency acknowledges that these types of connections are somewhat less reliable than a welded connection, EPA believes that the combination of a relatively low risk of leakage, the required compliance with standards for proper design, installation, and inspection, and the impracticality of designing secondary containment for such connections may make a reasonable case for exempting these connections from the requirement for secondary containment. The Agency is continuing to study this issue and may amend the regulations in the future to provide such an exemption for these connections.

ii. *Compression Fittings.* A compression fitting can be an integral part of a tank system component (e.g., the fitting is built into the valve or pressure gauge), or it can be a separate piece that is threaded to the component. These fittings are used where the tubing has too high a ratio of wall thickness to diameter for flaring or where the tubing lacks sufficient ductility for flaring. The seal is made by a ferrule ring that is slipped over the end of the tube and compressed onto the tube by a compression nut on the fitting. The ferrule ring has two sealing surfaces: a smooth-bore inner-diameter surface that is compressed onto the tube surface, and a smooth conical-shaped outer-diameter surface that makes a metal-to-metal seal to a matching machined-cone surface in the body or housing of the compression fitting. The sleeve must be considerably harder than the tubing, yet still ductile enough to be diametrically compressed. It also must be as resistant as the tubing to corrosion by the fluid handled. Because the ferrule is under great compression force, a very tight seal is obtained. This force is usually sufficient to overcome differences in coefficients of thermal expansion of the materials used for the tube and fitting, normal vibration, and other factors that would cause threaded joints to leak.

Properly designed and manufactured compression fittings rarely leak. They are used in highly critical applications, such as connections for fuel lines and hydraulic systems on aircraft. Flareless compression fittings are used extensively and can be designed for systems up to 60,000 pounds per square inch gauge (psig). The ANSI B31.3 Code lists no restrictions for compression fittings, except that they be safeguarded if used in severe cyclic conditions. Leaks, when they occur, are usually attributed to one of the following causes:

—Dirt or debris trapped on the sealing surface;

—Improper torqueing (too loose or over-tightening);

—Wear or scoring from excessive removal and reinstallation of the connection;

—Damage from handling during installation or removal; or

—Excessive vibrations or bending moments at the tube-to-fitting interface.

EPA believes that compression fittings used on metallic tubing may be nearly as reliable as welded connections. EPA is considering amending the rules to exempt metal tubing that uses compression fittings (but not with a threaded connection between the fitting and device) from the secondary containment requirement.

The Agency is convinced, however, that secondary containment should be required for plastic piping connections that use compression fittings. Although plastic piping can be joined in a manner similar to compression fittings for metal piping, the technique is substantially different. Since metals are ductile, the ferrule metal seal and the tubing are both actually compressed by the compression nut. On the other hand, plastics are not as ductile or as strong as metals, and a seal is made by the much lower compressive force of an elastomer sealing ring. Thus, EPA does not believe that these plastic systems afford sealing equivalent to that of solvent-cemented or fused joints.

iii. *Flared-fitting joints.* Flared-fitting joints are used for ductile tubing in cases where the ratio of wall thickness to the diameter is small enough to permit flaring without cracking the inside surface. The tubing must have a smooth interior surface. A flared fitting that employs a sleeve avoids torsional strain on the tubing and minimizes vibration fatigue on the flared portion of the tubing. More labor is required for assembly, but it is more resistant to temperature cycling than other tubing fittings and is unlikely to be damaged by over-tightening. For these fittings, less control of tube diameter is required.

The Agency believes that flared-fitting joints, although not as reliable as compression fittings, still present a low risk of leakage. However, given the lack of available data on the reliability of flared-fitting joints, EPA is unable at this time to determine whether these joints should be exempted from the requirement of secondary containment. The Agency may consider this issue in a future rulemaking.

3. Exemption of Aboveground Sealless Valves

As previously discussed, 40 CFR 264.193 and 265.193 of the final rule exempt certain aboveground piping system components from the secondary containment requirement. EPA has received several inquiries regarding an apparent inconsistency between the discussion of these exemptions in the preamble (51 FR 25450, July 14, 1986) and the list of exemptions codified in 40 CFR 264.193(f)(1)–(4) and 265.193(f)(1)–(4) (51 FR 25475 and 25481). Sealless pumps are exempted under §§ 264.193(f) and 265.193(f) because they do not use traditional packing materials, which are a common source of leakage. Similarly, the Agency intended to exempt sealless valves, as mentioned in the preamble discussion, provided that a welded connection is used to join the sealless valve to the piping. However, the regulatory exemption refers to sealless pumps, but not sealless valves. Thus, today EPA is correcting its omission of sealless valves from the regulatory language of 40 CFR 264.193(f)(3) and 265.193(f)(3) by adding sealless valves to the list of piping components that need not be provided with secondary containment.

4. Extent of Required Leak Detection.

Sections 264.193(b) and 265.193(b) set out the performance standards for secondary containment systems. Additional details on how to meet these performance standards are found in §§ 264.193(c) and 265.193(c). EPA has received several inquiries regarding the intent of the wording in 40 CFR 264.193(c)(3) and 265.193(c)(3) which states that secondary containment systems must be:

> Provided with a leak-detection system that is designed and operated so that it will detect the failure of either the primary or secondary containment structure or the presence of any release of hazardous waste or accumulated liquid in the secondary containment system within 24 hours * * *.

Numerous inquirers took this provision to mean that the Agency was intending that a leak detection capability be provided both within, and external to, the secondary containment structure. Several other inquirers requested clarification of whether the Agency requires detection of failure of either the primary or secondary containment structures or the presence of any release, or both.

Under this provision, EPA intended that the leak detection component of a secondary containment system promptly detect any release from the primary structure into the secondary containment structure. EPA used the wording, "Provided with a leak detection system that is designed and operated so that it will detect failure of either the primary or secondary containment structure", to ensure that double-walled tanks which detect failure of either the primary or the secondary containment structure (e.g., via loss of pressure in the interstitial space between the two walls) meet the requirements of §§ 264.193(b) and 265.193(b). This provision should not be interpreted to require leak detection outside of the secondary containment structure in order to detect failure of the secondary containment structure.

5. Requirements for Concrete Liners

In 40 CFR 264.193(e) (1) and (2), and 265.193(e) (1) and (2), EPA promulgated standards applicable to external liners and vault systems. The external liner requirements of 40 CFR 264.193(e)(1) and 265.193(e)(1) address the subject of liners generically. For example, they do not differentiate between synthetic membrane liners and concrete. On the other hand, the requirements for vault systems under 40 CFR 264.193(e)(2) and 265.193(e)(2) are applicable only to concrete.

However, EPA did not intend that concrete used, for example, as a base and diking material for secondary containment of an aboveground tank or onground tank should be subject to requirements significantly different from concrete that is used in the construction of a secondary containment vault. Certain of the requirements promulgated for concrete vaults are appropriate and are intended to be applied to situations where concrete is used in the construction of any secondary containment structures. Thus, concrete liner systems must also meet the more specific requirements of 40 CFR 264.193(e)(2) (iii) and (iv) and 265.193(e)(2) (iii) and (iv) in order to meet the general performance standards under 40 CFR 264.193(e)(1) (iii) and (iv) and 265.193(e)(1) (iii) and (iv), which specify that the liner system be free of cracks or gaps and designed to prevent migration of the waste. Chemical-resistant water stops at all joints, as specified in 40 CFR 264.193(e)(2)(iii) and 265.193(e)(2)(iii) are appropriate for any concrete structure serving as a secondary containment device. Likewise, given the relative permeability of concrete, the Agency believes that most secondary containment concrete structures, vaults or otherwise, will require an impermeable coating or lining that will prevent migration of waste into the concrete as specified in 40 CFR 264.193(e)(2)(iv) and 265.193(e)(2)(iv). Such coating or lining must also be compatible with the waste(s) managed within the secondary containment structure.

6. Secondary Containment of Pressurized Piping with Automatic Shut-Off Devices.

EPA has received a number of questions regarding the exemption from secondary containment of pressurized piping with automatic shut-off devices.

Under 40 CFR 264.193(f)(4) and 265.193(f)(4), aboveground pressurized piping systems with automatic shutoff devices that are visually inspected on a daily basis are exempt from the secondary containment requirement. Furthermore, this provision allows this exemption even if welded flanges, welded joints, welded connections, sealless valves, and sealless or magnetic coupling pumps are not used. However, the Agency is reconsidering this exemption. EPA may have over-estimated the effectiveness of automatic shut-off devices. Although these devices should certainly limit the quantity of waste released in case of a substantial failure somewhere in the piping system (e.g., pipe rupture), they would be unlikely to have any effect on reducing the number or size of releases in piping systems due to small or slow leaks at valves, connections, flanges, etc.

It was not EPA's intent to prescribe less importance to small leaks in pressurized piping systems. In fact, such less-than-major leaks would be of greater concern in pressurized piping systems compared to nonpressurized systems due to the potential to release larger quantities of hazardous waste.

Thus, the Agency believes that it may be prudent to require all aboveground piping systems, pressurized as well as nonpressurized, and even with automatic shut-off devices, to use welded joints, sealless valves, sealless or magnetic coupling pumps, etc., in order to be exempted from the secondary containment requirement. In fact, automatic shut-off devices may also need to be welded so as not to be a source of leakage. Using this approach, automatic shut-off devices might be used to protect against catastrophic releases and serve as a means to limit the size of the secondary containment system(s), where needed, rather than serve as a means for the entire piping system to be exempted from secondary containment. EPA is considering proposing such an amendment to the tank system standards in the near future.

C. Extent of Cathodic Protection for Primary Tanks

EPA received several inquiries regarding the intent of the 40 CFR 264.193(e)(3)(ii) and 265.193(e)(3)(ii). That regulation specifies double-walled tanks must be "protected, if constructed of metal, from both corrosion of the primary tank interior and of the external surface of the outer shell * * *." Apparently, this wording has been interpreted to mean that cathodic protection must be provided for the interior surface of the primary tank. This was not EPA's intent.

With respect to the interior of the primary tank, this requirement was chiefly intended to address the excessive or accelerated corrosion of the primary tank's interior surface resulting from incompatibility between the tank construction material and the stored waste(s). This provision thus reiterates the requirement found elsewhere in the standards (e.g., 40 CFR 264.191(b), 264.192(a)), that accelerated corrosion of the primary tank's interior surfaces must be prevented. However, this provision does not mandate cathodic protection of the interior surface of primary tank structures.

D. Application of the Immediate Response Exemption to Sumps

As part of the settlement of the *EEI* litigation, EPA agreed to clarify the applicability of the immediate response exemption under 40 CFR 264.1(g)(8) and 265.1(c)(11) to sumps. The July 14, 1986, final rule discussed three types of sumps that may be regulated as tanks under this revised rule: "temporary tanks," secondary containment sumps, and primary containment tanks. With respect to temporary tanks, i.e., tanks used for storage of waste in response to a leak or spill, and other temporary, unplanned occurrences, the Agency stated that no Subpart J standards were applicable since such storage was exempted from these regulatory requirements under 40 CFR 264.1(g)(8) and 265.1(c)(11) (51 FR 25445). Those sections (along with 40 CFR 270.1(c)(3))

exempt any person from permitting requirements and regulatory standards for "treatment or containment activities taken during immediate response to * * * [a] discharge of a hazardous waste", except requirements concerning preparedness and emergency procedures. The purpose of the exemption is to allow appropriate immediate response to hazardous waste discharges in emergency situations where treatment or storage is necessary but the facility owner or operator would not have had sufficient previous warning to comply with regulatory standards or obtain a RCRA permit for such treatment or storage (51 FR 25445, July 14, 1986); (48 FR 2509, January 19, 1983). A sump that may be used to collect hazardous waste in the event of a spill, whether accidental or intentional, and that is not designed to serve as a secondary containment structure for a tank storing hazardous waste, is generally exempt from regulatory and permitting requirements so long as it is used to contain hazardous waste only as an immediate response to such a spill.

Sumps that serve as part of a secondary containment system, i.e., to collect spills from a primary containment vessel storing hazardous waste, are subject to all applicable requirements for tank systems except for the requirement to obtain secondary containment. (51 FR 25441, July 14, 1986). In contrast to "temporary tanks", secondary containment sumps and all other secondary containment structures, are specifically designed to serve as the collection device for spills of hazardous waste from an adjacent primary containment vessel.

Finally, except as noted in section II.A. above, sumps that store hazardous waste as primary containment vessels are subject to all tank system requirements, including the requirement to obtain secondary containment (or a variance). Primary containment sumps are sumps designed to collect and transport routine and systematic discharges of hazardous waste (51 FR 25441, July 14, 1986). Sumps designed to serve as the storage for hazardous waste from periodic cleaning of utility boilers, for example, are primary containment vessels, although as explained above they will still qualify for an exemption from the tank system requirements if they are used as ancillary equipment to an exempted wastewater treatment or elementary neutralization unit. See Section II.A. *supra*.

In short, upon consideration of 40 CFR 264.1(g)(8) and 265.1(c)(11) and the interrelationship of these provisions with the July 14, 1986 final rule, EPA believes that some sumps may be exempt from regulation under this provision. This interpretation is consistent with the preamble discussion of the spill exemption provision (48 FR 2508, January 19, 1983). As explained in that preamble, the purpose of the provision was to address emergency situations, whether due to accidental discharges or to spills during routine maintenance of equipment, where there is no time to comply with technical and procedural requirements pertaining to storage and treatment of hazardous waste (48 FR 2508, January 19, 1983). This rationale is inapplicable to units constructed for the purpose of containing hazardous waste from routine and systematic discharges of hazardous waste or designed to serve as the secondary containment for a tank system treating or storing hazardous waste.

III. Correction of Typographical Errors

On August 15, 1986, EPA published in the **Federal Register** a notice of corrections to the revised final tank system standards (51 FR 29430). Since that time, a number of additional typographical or coding errors in the final rules or in the notice of corrections have been brought to EPA's attention.

Several coding errors were a result of EPA's omission on several occasions of the word "system" when the term "tank system" as opposed to "tank" was intended to be used. In general, it is the Agency's intent that both a regulated hazardous waste tank and its ancillary equipment be subject to the revised standards of July 14, 1986. As such, EPA promulgated a definition of "tank system." Although the Agency tried to ensure that the term "tank system" was incorporated, wherever applicable, into the final rule, EPA apparently overlooked several situations where this term should have been likewise inserted. As previously discussed in Section II.A.1, the definition of "elementary neutralization unit" and "wastewater treatment unit" should have included the term "tank system." Likewise, the word "system" was inadvertently omitted from 40 CFR 264.190 and 265.190. In these paragraphs, the exemption from secondary containment was intended to apply to any tank and its ancillary equipment, i.e., any portion of the tank system, situated inside a building with an impermeable floor. In 40 CFR 264.190(b) and 265.190(b) a different omission occurred. Although the Agency's intent is not to require secondary containment of tank systems, including sumps, that serve the purpose of secondary containment, EPA does intend that these secondary containment systems, or portions thereof, must meet the design, installation, and operation requirements for a secondary containment system in accordance with 40 CFR 264.193(b)–(i) and 265.193(b)–(i). It is EPA's intent that these units be exempted only from 40 CFR 264.193(a) and 265.193(a), that, in any case, is redundant of the provision requiring secondary containment.

Another omission occurred in 40 CFR 264.193(f) and 265.193(f) in that EPA neglected to include aboveground sealless valves under the exemption from secondary containment. As evidenced in the preamble discussion for the July 14, 1986 standards (51 FR 25450), it was the Agency's intent that the exemption be applicable to these valves. A detailed discussion of this omission is provided in Section II.B.3.

EPA, in the process of including tank systems in the applicability section of the closure and post-closure requirements in Subpart G (40 CFR 265.110), inadvertently deleted the previously existing 40 CFR 265.110(b)(2), that addresses the applicability of Subpart G to waste piles and surface impoundments. Consistent with 40 CFR 264.110, EPA is today reinstating this provision in 40 CFR 265.110 and renumbering the paragraph as applied to tank systems. Today's rule also incorporates a conforming change into 40 CFR 264.114 and 265.114. In the revised tank system standards, EPA promulgated specific closure and post-closure care requirements in 40 CFR 264.197 and 265.197 and stated that tank systems also must meet the requirements of Subparts G and H, unless otherwise specified. EPA neglected to make the cross-reference in 40 CFR 264.114 and 265.114 to allow alternate post-closure care for certain tank systems as specified in CFR 264.197 and 265.197.

Several typographical errors have also been brought to the Agency's attention. In the first Note for 40 CFR 264.196 and 265.196, the reference to RCRA section 3004(u) and 3004(w), respectively, is a mistake. The correct reference should be RCRA section 3004(v). Another typographical error appeared in 40 CFR 265.201(c)(3) where a wrong citation of a paragraph was made. Instead of referring to "40 CFR 265.192(c)," a provision that has nothing to do with the level of waste in a tank, "40 CFR 265.201(b)(3)" requiring that uncovered tanks be operated to ensure at least 60 centimeters of freeboard, should have been cited. In this notice, EPA is also correcting these errors.

IV. Compliance With Administrative Procedure Act Requirements

Section 553(b) of the Administrative Procedure Act generally requires proposal of administrative rulemakings to receive public comment prior to promulgation. However, section 553(b) excludes certain types of rules from the prior notice-and-comment requirement, including interpretative rules and rules for which public comment is unnecessary. Because today's notice includes only interpretative statements concerning existing hazardous waste tank system requirements and minor technical corrections, prior notice and the solicitation of public comment on this notice is unnecessary.

List of Subjects in 40 CFR Parts 260, 264, 265, and 270

Administrative practice and procedure, Environmental protection, Hazardous waste, Tank systems, Waste storage and treatment, Water pollution control, Water supply.

Dated: August 24, 1988.

J.W. McGraw,

Acting Assistant Administrator, Office of Solid Waste and Emergency Response.

For the reasons set out in the Preamble, Title 40 of the Code of Federal Regulations is amended as follows:

PART 260—HAZARDOUS WASTE MANAGEMENT SYSTEM: GENERAL

40 CFR Part 260 is amended as follows:

1. The authority citation for Part 260 continues to read as follows:

Authority: Secs. 1006, 2002(a), 3001 through 3007, 3010, 3014, 3015, 3017, 3018, and 3019 of the Solid Waste Disposal Act, as amended by the Resource Conservation and Recovery Act of 1976, as amended (42 U.S.C. 6905, 6912(a), 6921 through 6927, 6930, 6934, 6935, 6937, 6938, and 6939).

2. Section 260.10 is amended by revising the following definitions in alphabetical order:

§ 260.10 Definitions.

* * * * *

"Elementary neutralization unit" means a device which: (1) Is used for neutralizing wastes that are hazardous only because they exhibit the corrosivity characteristic defined in § 261.22 of this chapter, or they are listed in Subpart D of Part 261 of the chapter only for this reason; and

(2) Meets the definition of tank, tank system, container, transport vehicle, or vessel in § 260.10 of this chapter.

* * * * *

"Wastewater treatment unit" means a device which: (1) Is part of a wastewater treatment facility that is subject to regulation under either section 402 or 307(b) of the Clean Water Act; and

(2) Receives and treats or stores an influent wastewater that is a hazardous waste as defined in § 261.3 of this chapter, or that generates and accumulates a wastewater treatment sludge that is a hazardous waste as defined in § 261.3 of this chapter, or treats or stores a wastewater treatment sludge which is a hazardous waste as defined in § 261.3 of this Chapter; and

(3) Meets the definition of tank or tank system in § 260.10 of this chapter.

PART 264—STANDARDS FOR OWNERS AND OPERATORS OF HAZARDOUS WASTE TREATMENT, STORAGE, AND DISPOSAL FACILITIES

40 CFR Part 264 is amended as follows:

3. The authority citation for Part 264 continues to read as follows:

Authority: Secs. 1006, 2002, 3004, and 3005 of the Solid Waste Disposal Act as amended by the Resource Conservation and Recovery Act of 1976, as amended (42 U.S.C. 6905, 6912(a), 6924, and 6925).

4. Section 264.114 is amended by revising the first sentence to read as follows:

§ 264.114 Disposal or decontamination of equipment, structures and soils.

During the partial and final closure periods, all contaminated equipment, structures and soils must be properly disposed of or decontaminated unless otherwise specified in §§ 264.197, 264.228, 264.258, 264.280 or § 264.310. * * *

5. Section 264.190 is amended by revising the first sentence of paragraph (a) and by revising paragraph (b) to read as follows:

§ 264.190 Applicability.

* * * * *

(a) Tank systems that are used to store or treat hazardous waste which contains no free liquids and are situated inside a building with an impermeable floor are exempted from the requirements in § 264.193. * * *

(b) Tank systems, including sumps, as defined in § 260.10, that serve as part of a secondary containment system to collect or contain releases of hazardous wastes are exempted from the requirements in § 264.193(a).

* * * * *

6. Section 264.193 is amended by revising paragraph (f)(3) to read as follows:

§ 264.193 Containment and detection of releases.

* * * * *

(f) * * *

(3) Sealless or magnetic coupling pumps and sealless valves, that are visually inspected for leaks on a daily basis; and

* * * * *

7. Section 264.196 is amended by revising the first Note to read as follows:

§ 264.196 Response to leaks or spills and disposition of leaking or unfit-for-use tank systems.

* * * * *

Note.—The Regional Administrator may, on the basis of any information received that there is or has been a release of hazardous waste or hazardous constituents into the environment, issue an order under RCRA section 3004(v), 3008(h), or 7003(a) requiring corrective action or such other response as deemed necessary to protect human health or the environment.

* * * * * *

PART 265—INTERIM STATUS STANDARDS FOR OWNERS AND OPERATORS OF HAZARDOUS WASTE TREATMENT, STORAGE, AND DISPOSAL FACILITIES

40 CFR Part 265 is amended as follows:

8. The authority citation for Part 265 continues to read as follows:

Authority: Secs. 1006, 2002(a), 3004, 3005, and 3015, Solid Waste Disposal Act, as amended by the Resource Conservation and Recovery Act, as amended (42 U.S.C. 6905, 6912(a), 6924, 6925, and 6935).

9. Section 265.110 is amended by redesignating existing paragraph (b)(2) as (b)(3), and adding a new paragraph (b)(2) to read as follows:

§ 265.110 Applicability.

* * * * *

(b) * * *

(2) Waste piles and surface impoundments for which the owner or operator intends to remove the wastes at closure to the extent that these sections are made applicable to such facilities in § 265.228 or § 265.258; and

* * * * *

10. Section 265.114 is amended by revising the first sentence to read as follows:

§ 265.114 Disposal or decontamination of equipment, structures and soils.

During the partial and final closure periods, all contaminated equipment, structures and soil must be properly disposed of, or decontaminated unless specified otherwise in §§ 265.197, 265.228, 265.258, 265.280, or 265.310. * * *

11. Section 265.190 is amended by revising the first sentence of paragraph (a) and by revising paragraph (b) to read as follows:

§ 265.190 Applicability.

* * * * *

(a) Tank systems that are used to store or treat hazardous waste which contains no free liquids and that are situated inside a building with an impermeable floor are exempted from the requirements in § 265.193. * * *

(b) Tank systems, including sumps, as defined in § 260.10, that serve as part of a secondary containment system to collect or contain releases of hazardous wastes are exempted from the requirements in § 265.193(a).

* * * * *

12. Section 265.193 is amended by revising paragraphs (f)(3) and (g)(3)(iii) to read as follows:

§ 265.193 Containment and detection of releases.

* * * * *

(f) * * *

(3) Sealless or magnetic coupling pumps and sealless valves, that are visually inspected for leaks on a daily basis; and

* * * * *

(g) * * *

(3) * * *

(iii) If contaminated soil cannot be removed or decontaminated in accordance with paragraph (g)(3)(ii) of this section, comply with the requirements of § 265.197(b);

* * * * *

13. Section 265.196 is amended by revising the first Note to read as follows:

§ 265.196 Response to leaks or spills and disposition of leaking or unfit-for-use tank systems.

* * * * *

Note.—The Regional Administrator may, on the basis of any information received that there is or has been a release of hazardous waste or hazardous constituents into the environment, issue an order under RCRA section 3004(v), 3008(h), or 7003(a) requiring corrective action or such other response as deemed necessary to protect human health or the environment.

* * * * *

14. Section 265.201 is amended by revising paragraph (c)(3) to read as follows:

§ 265.201 Special requirements for generators of between 100 and 1,000 kg/mo that accumulate hazardous waste in tanks.

* * * * *

(c) * * *

(3) The level of waste in the tank at least once each operating day to ensure compliance with § 265.201(b)(3);

* * * * *

PART 270—EPA ADMINISTERED PERMIT PROGRAMS: THE HAZARDOUS WASTE PERMIT PROGRAM

40 CFR Part 270 is amended as follows:

15. The authority citation for Part 270 is revised to read as follows:

Authority: 42 U.S.C. 6905, 6912, 6924, 6925, 6927, 6939, and 6974.

16. Section 270.2 is amended by revising the following definitions in alphabetical order:

§ 270.2 Definitions.

* * * * *

Elementary neutralization unit means a device which: (a) Is used for neutralizing wastes only because they exhibit the corrosivity characteristic defined in § 261.22 of this chapter, or are listed in Subpart D of Part 261 of this chapter only for this reason; and (b) Meets the definition of tank, tank system, container, transport vehicle, or vessel in § 260.10 of this chapter.

* * * * *

Wastewater treatment unit means a device which:

(a) Is part of a wastewater treatment facility which is subject to regulation under either section 402 or 307(b) of the Clean Water Act; and

(b) Receives and treats or stores an influent wastewater which is a hazardous waste as defined in § 261.3 of this chapter, or generates and accumulates a wastewater treatment sludge which is a hazardous waste as defined in § 261.3 of this chapter, or treats or stores a wastewater treatment sludge which is a hazardous waste as defined in § 261.3 of this chapter; and

(c) Meets the definition of tank or tank system in § 260.10 of this chapter.

* * * * *

[FR Doc. 86-19830 Filed 9-1-86; 8:45 am]
BILLING CODE 6560-50-M

FEDERAL EMERGENCY MANAGEMENT AGENCY

44 CFR Part 64

[Docket No. FEMA 6806]

Suspension of Community Eligibility; Alabama et al.

AGENCY: Federal Emergency Management Agency, FEMA.

ACTION: Final rule.

SUMMARY: This rule lists communities, where the sale of flood insurance has been authorized under the National Flood Insurance Program (NFIP), that are suspended on the effective date shown in this rule because of noncompliance with the revised floodplain management criteria of the NFIP. If FEMA receives documentation that the community has adopted the required revisions prior to the effective suspension date given in this rule, the community will not be suspended and the suspension will be withdrawn by publication in the Federal Register.

EFFECTIVE DATE: As shown in fifth column.

FOR FURTHER INFORMATION CONTACT: Frank H. Thomas, Assistant Administrator, Office of Loss Reduction, Federal Insurance Administration, Federal Center Plaza, 500 C Street SW., Room 416, Washington, DC 20472, (202) 646-2717.

SUPPLEMENTARY INFORMATION: The NFIP enables property owners to purchase flood insurance at rates made reasonable through a Federal subsidy. In return, communities agree to adopt and administer local floodplain management measures aimed at protecting lives and new construction from future flooding. Section 1315 of the National Flood Insurance Act of 1968, as amended (42 U.S.C. 4022), prohibits flood insurance coverage as authorized under the NFIP (42 U.S.C. 4001–4128) unless an appropriate public body shall have adopted adequate floodplain management measures with effective enforcement measures.

On August 25, 1986, FEMA published a final rule in the Federal Register that revised the NFIP floodplain management criteria. The rule became effective on October 1, 1986. As a condition for continued eligibility in the NFIP, the criteria at 44 CFR 60.7 require communities to revise their floodplain management regulations to make them consistent with any revised NFIP regulation within 6 months of the effective date of that revision or be subject to suspension from participation in the NFIP.

The communities listed in this notice have not amended or adopted floodplain management regulations that incorporate the rule revision. Accordingly, the communities are not compliant with NFIP criteria and will be suspended on the effective date shown in this final rule. However, some of these communities may adopt and submit the required documentation of legally enforceable revised floodplain management regulations after this rule is

OSR 3-4A-W (Rev1-89)

WESTINGHOUSE SAVANNAH RIVER COMPANY

INTER-OFFICE MEMORANDUM

CLH,
Pls. take lead on this.
Need to follow 'New' reg's and be consistant with previous submittal.
Jeff Pike is contact!
WDD 9/10

NMP-WMT-910887

September 5, 1991

To: W. D. Dunaway, 703-18A

From: Jeff Pike
J. A. Pike, 703-H, 7-8843

Phase II Tank Farm Tank Assessment for DOE Approval

Attached is a copy of the Phase II Tank Assessment Report which assesses the remainder of the tank systems not assessed by the Phase I document submitted to SCDHEC with Tank Farm Wastewater Permit Application. Please transmit this document to DOE Environmental Division for concurrence.

The report has been reviewed by DOE High Level Waste Division and comments resolved. In addition, the report has had extensive internal reviews.

If you have any question, please call me at 557-8843.

CC: B. L. Lewis, 703-H
M. C. Chandler, 703-H
WMT Files, 703-H
File Code: 175.15

OSR 3-4A-W (Rev1-89)

Joe Adams

CRH,
Let's discuss
WOD 9/16

WESTINGHOUSE SAVANNAH RIVER COMPANY

INTER-OFFICE MEMORANDUM

SEP 10 1991

NMP-IWP-910089

September 4, 1991

To: J. S. ROBERTS, 742-A

From: G. T. WRIGHT, 703-H GTW

Transmittal of an Additional Drawing for the Tank Farm Wastewater Permit Application

Attached are 4 color copies the SRS High Level Radioactive Waste Tank Farms drawing displaying the waste tank usage. Please transmit these drawings to SCDHEC as soon as practicable.

During SCDHEC's August 6 visit to Waste Management facilities, Larry Arrington, SCDHEC, expressed interest in the color WMOP waste process flow drawing displayed in the conference room. Waste Management is providing the attached drawing for reference when reviewing the SRS Tank Farm Wastewater Permit Application.

If there are any questions, please contact J. A. Pike at 7-8843.

CC: R. A. Scaggs, 703-H
B. L. Lewis, 703-H
M. C. Chandler, 703-H
P. D. d'Entremont, 703-H

W-0517

BECHTEL SAVANNAH RIVER, INC.

INTER-OFFICE MEMORANDUM

ENGINEERING & PROJECTS DIVISION
CONSTRUCTION

August 30, 1991

LOG NO. CESM-91-0480

TO: J. A. PIKE, 703-H

FROM: R. D. KOWALSKI, C/S - MDC 112 RDK

CONSTRUCTION CERTIFICATION FUNDING REQUIREMENTS FOR F AND H AREAS HIGH LEVEL RADIOACTIVE WASTE TANK FARMS (U)

Reference: W. R. Greenaway memo dated July 9, 1991

Please find attached the referenced memo which identifies the game plan whereby a licensed South Carolina Professional Engineer from offsite will be employed to provide the Construction Certification for the H-Area Diversion Box # 8 and H/S Interarea Transfer Line portions of the industrial wastewater permit application previously submitted to SCDHEC. Summarized below are the estimated cost figures necessary to employ the services of the offsite Professional Engineering along with the cost for on-site Construction Engineering and Quality Control support of this activity:

	Manhours	Dollars
Design Engineering:		
Professional Engineer & Staff Assistance	208	$15,000
Travel & Living Expenses		$ 6,000
Construction Engineering & Quality Control:		
Engineering & Quality Control Support Personnel	390	$14,500
Construction Professional Engineer Coordination	40	$ 1,500
TOTALS:	638	$37,000

Please initiate the necessary authorization and funding as outlined above to begin the certification process. It is anticipated that once funded that the certification may be completed within two months.

Should you have any question, please contact me at extension 557-7957.

ACTION REQUIRED: YES
WRITTEN RESPONSE REQUIRED: NO
DUE DATE: NO

RDK:rdk

att

cc: D. J. Amaral, MDC 112, w/o
L. A. Bowles, 5002-H, MDC 106, w/
P. A. Forbes, 5002-H, MDC 84, w/
W. S. Gray, BTC-B14-058, w/o
W. R. Greenaway, BTC-B14-080, w/o
C. R. Hayes, 703-18A, w/
W. F. Hindle, 5002-H, MDC 84, w/o
CES FILE 6120

BECHTEL SAVANNAH RIVER, INC.
INTEROFFICE MEMORANDUM

July 29, 1991

TO: R. D. Kowalski - MDC 112

FROM: W. R. Greenaway - BTC-B14-080 WRG

CONSTRUCTION CERTIFICATION PROPOSAL FOR CONSTRUCTION PERMIT FOR F AND H AREAS HIGH LEVEL RADIOACTIVE WASTE TANK FARMS (U)

As requested in your memo of July 11, I have located an engineer with a South Carolina PE stamp that is willing to review the installation of the H-Area Diversion Box No 8 and the H/S Interarea Transfer Line and certify for the operating permit application, after a thorough site review, that they have been built as designed.

Basically we would propose the following course of action:

- The PE and a senior member of his staff would visit the site and become familiar with the project. The engineer would get (red) badged and go through GET training at that time. They would then put together a list of documents that they will need for the review and leave the list for the project people to collect. This visit will probably take about three days and could be done about mid-August.

- After the project engineers have collected the documents and drawings needed, they would call the engineer and set up the second visit. He would then return at a mutually agreeable time and perform the walk downs and reviews needed. At the end of his review, he would return to his office, go over the results of his review with the PE and have the PE apply his stamp to the required pages of the permit application. It is anticipated that two trips will be needed for the site reviews.

The cost of the work is estimated at $15,000 for labor (based on 26 man days at $75/hr, the approximate government audited rate) and $6000 travel and living expenses.

a:\const.rev

BSRI-0010 7/89

The above estimate is based on the senior engineer making two trips of two weeks duration each. The schedule somewhat depends on the desires of the site personnel and their ability to gather the required documentation quickly. If they can work quickly, it is possible to complete the whole project in about five weeks. The mid-August start date can be met and perhaps bettered if need be.

Support from the project will be needed to assist the engineer in finding the equipment, locating personnel who have worked on the installation if necessary, and generally be available for questions. My estimate for this is one person about half time for the first two weeks and about one day a week for the second two weeks.

I believe that this covers all the points in your memo. If you have any questions, please give me a call at 952-5218.

WRG/wrg

cc: W. S. Gray, BTC-B14-058
J. W. Kluesener, G'BURG-MGMT-7A-1

Written Response Required: No
File No.: DE-010.05

OSR 3-4A-W (Rev1-89)

W-0517
AH-0340
AH-0341

WESTINGHOUSE SAVANNAH RIVER COMPANY

INTER-OFFICE MEMORANDUM

ESH-FSG-910631

August 9, 1991

TO: B. L. LEWIS, 703-H

FROM: J. V. ODUM, 742-A (X5-1531) WD Dunaway for

ENVIRONMENTAL PERMITTING STATUS FOR THE IN-TANK PRECIPITATION FACILITY (U)

Per your request, please find attached the status of environmental permits / concerns for the In-Tank Precipitation Facility. Included is the name of the EPD contact for each concern / permit. As noted, a number of items need addressing prior to operation of the facility (i.e. prior to chemical runs and / or "hot" operations.

Please let me or the appropriate EPD contact know if there are any questions.

CRH:vcj
Attachment

CC: w/ attachment
P. C. Carroll, 742-A
S. J. Carroll, 742-A
S. S. Cathey, 703-H
L. S. Coward, 703-18A
N. R. Davis, 241-120H
P. D. D'Entremont, 703-H
W. D. Dunaway, 703-18A
K. W. Dyer, 742-A
T. A. Faugl, 742-A
T. P. Gaughan, 241-102H
M. Hawkins, 742-A
C. R. Hayes, 703-18A
T. G. Jordan, 742-A
H. W. Morris, 742-A
J. A. Pike, 703-H
C. B. Shedrow, 773-42A
C. B. Stevens, 703-H
K. S. Wierzbicki, 703-H
K. Z. Wolf, 704-15S
C. C. Zeigler, 742-A
Central Files, 703-A
EPD Fileroom, 742-A

2

IN-TANK PRECIPITATION FACILITY
ENVIRONMENTAL PERMITS / CONCERNS STATUS

SCDHEC INDUSTRIAL WASTEWATER PERMIT

W-0517 A construction permit, a SCDHEC final inspection and an operating permit are required prior to hot operations. The construction permit application package is currently at SCDHEC awaiting their review. Contact is C. R. Hayes (x5-8838).

SCDHEC AIR QUALITY CONTROL PERMITS

AH-0340 A construction permit (#0080-0046-CD) exists for the facility. A permit modification package was submitted to SCDHEC on 4/1/91. To date SCDHEC has not responded to the request to modify the permit. A construction permit modification and notification to SCDHEC at least three weeks prior to the inception of chemical runs are required. Also, notification that the system has been placed in service is required. A SCDHEC final inspection may also be necessary. Contact is T. A. Faugl (x5-4673).

AH-0341 A construction permit (#0080-0046-CE) exists for the 150 kW diesel generator also. Notification to SCDHEC at least three weeks prior to placing the unit into service is required. Also, notification that the generator has been placed in service is necessary. A SCDHEC final inspection may also be required. Contact is T. A. Faugl (x5-4673).

NEPA DOCUMENTATION

It appears there is no outstanding NEPA documentation required for starting up the ITP facility. However regulatory concerns may need to be addressed. Contact is C. B. Shedrow (x5-5197).

NESHAP

Calibration of the hot wire anemometers for stack flow measurement is required prior to chemical runs. Contact is C. C. Zeigler (x5-8839).

SURFACE WATER DISCHARGES

A spill prevention control program and best management practices plan may be required prior to chemical runs. Contact is P. C. Carroll (x5-5753).

It appears that a stormwater management program is in place. However regulatory concerns may need to be addressed. Contact is K. W. Dyer (x5-4734).

DOMESTIC WATER PERMITS

A permit variance was issued on 9/20/90 to allow tie-in of a safety shower and eyewash station to the domestic water system. Flushing and disinfection are required after construction and before operation of the line. Contact is C. R. Hayes (x5-8838).

UNDERGROUND STORAGE TANKS

It appears there are no UST concerns for starting up the ITP facility. Contact is H. W. Morris (x5-2457).

SOLID WASTE DISPOSAL

The program to handle the disposal of the cross flow filters needs approval by EPA prior to filter disposal. Currently there are no means available for treatment and/or disposal of the spent filters. Contact is S. J. Carroll (x5-9001).

GROUNDWATER

It appears that the EPD Groundwater Protection Section has not reviewed any groundwater related documents. This issue may need revisiting. Contact is T. G. Jordan (x5-1495).

W-0517

BECHTEL SAVANNAH RIVER, INC.

INTER-OFFICE MEMORANDUM

ENGINEERING & PROJECTS DIVISION
CONSTRUCTION

LOG NO. CESD-91-0381

July 11, 1991

TO: W. R. GREENAWAY, CDC B 14
ENVIRONMENTAL ENGINEER
DESIGN ENGINEERING

FROM: R. D. KOWALSKI, MDC 112
CONSTRUCTION DISCIPLINE ENGINEER MANAGER - CIVIL
CONSTRUCTION ENGINEERING SERVICES

CONSTRUCTION CERTIFICATION PROPOSAL FOR CONSTRUCTION PERMIT FOR "F" AND "H" AREAS HIGH LEVEL RADIOACTIVE WASTE TANK FARMS (U)

Pursuant to our discussion on July 10, 1991, this letter documents a request for you to prepare a proposal to supply the necessary personnel and expertise to provide the Professional Engineering Certification of the construction for the H-Area Diversion Box # 8 and H/S Interarea Transfer Line, as described by the subject permit package. Please note that only the two portions of the permit package, as described above and for which a pre-certification statement have been signed and sealed by me, should be addressed in your proposal. Activities associated with preparation of this proposal, which was agreed to be completed within two weeks, should be charged to CLS activity code W863190. This proposal should include the following:

1. Manhours and cost for personnel involved with certification review process, including but listed separately all business travel expenses.

2. Anticipated Construction Engineering and Construction Quality Control manpower requirements to support the certification review process.

3. Anticipated schedule for completion of certification process including assumptions. Please note that the permit package delivered to you was submitted to the South Carolina Department of Health and Environmental Control (SCDHEC), July 10, 1991, for review and subsequent issue of an operating permit. It is anticipated that it may take from 3 to 6 months for SCDHEC to complete this review. The Construction Professional Engineering Certification schedule, included in your proposal, should conclude in a similar time frame.

Upon receipt this proposal, I will forward it to the Waste - Project Management, to obtain to necessary funding authorization. No actions other than preparation of the above proposal should be initiated until the associated funding has been authorized. Your written response including the proposal is requested by July 26, 1991.

LOG NO. CESD-91-0381

Should you have any questions or require any further information please contact me at extension 7-7692.

ACTION REQUIRED: YES
WRITTEN RESPONSE REQUESTED: YES
DUE DATE: July 26, 1991

RDK:hal

cc: D. J. Amaral, MDC 112
L. A. Bowles, 5002-H MDC 106
P. A. Forbes, 5002-H MDC 84
C. R. Hayes, 703-18A
W. F. Hindle, 5002-H MDC 84
J. A. Pike, 703-H
J. L. Wood, 5002-H MDC 84
CES FILE 6120

WESTINGHOUSE SAVANNAH RIVER COMPANY

INTER-OFFICE MEMORANDUM

NMP-IWP-910055

July 2, 1991

TO: J. S. ROBERTS, 703-A

FROM: G. T. WRIGHT, 703-H
7-1527

F and H Area Tank Farm Wastewater Permit Application

Ref: Letter, H. W. Truesdale, SCDHEC to S. R. Wright, DOE-SR, "F/H-Area High Level Waste Tanks, Defense Waste Processing Facility (DWPF), Savannah River Site - SC1 890 008 989", June 30, 1989

Attached are six copies of the F and H Area Tank Farm Wastewater Permit Application package including the Assessment Report for the In-Tank Precipitation Treatment Facility. Please transmit the application package to SCDHEC as requested in the referenced letter. DOE has concurred with transmitting the application.

If there are any questions, please contact J. A. Pike at 7-8843.

CC:
S. S. Cathey, 703-H
R. C. Miller, 241-121H
R. A. Scaggs, 703-H
P. H. Stevens, 707-H
R. M. Cutshall, 724-7G
N. R Davis, 241-120H
V. G. Dickert, 703-F
A. S. Greer, 241-102H
S. F. Putnam, 703-H
I. K. Sullivan, 241-84H
R. W. Wilson, 703-H
B. L. Lewis, 703-H
J. V. Odum, 742-A
W. D. Dunaway, 703-18A
K. Z. Wolf, 704-S
M. C. Chandler, 703-H
P. D. d'Entremont, 703-H
W. B. Van Pelt, 241-121H
M. A. Ceravolo, 703-H
B. A. Phillips, 241-102H
T. P. Gaughan, 241-120H
J. A. Pike, 703-H

INTER-OFFICE MEMORANDUM
Savannah River Site

Date: 19-Jun-1991 07:11am EDT
From: Jeff Pike
PIKE-JA-Y5547 AT A1 AT SASRS2
Dept: WMT
Tel No: x7-8843

TO: W. DANNY DUNAWAY (DUNAWAY-WD-O7436 @A1@SLSRP1)

Subject: Wastewater Permit

WM PMT wants the permit to be submitted before the end of the month. If the permit is not ready until the last minute, they want it submitted even if SCDHEC does not tour the tank farms before transmittal. Will you support this action if need be? If SCDHEC can not tour the tank farms before the end of June, will the application still be transmitted before the end of June?

cc: JVO
JFJ
MH

Makes no difference to me; however, we saw how the strategy worked for DWPF (IT worked), but, I don't know if we want to fall on our swords over scheduling; after all, WM are the ones who stand to suffer by the course of action

WD
6/19

COMMENTS ON DRAFT AS-BUILT CONSTRUCTION PERMIT APPLICATION PACKAGE FOR THE F- AND H-AREA HIGH LEVEL TANK FARMS REVISION 0

BACKGROUND

This permit application is being submitted to South Carolina Department of Health and Environmental Control (SCDHEC) to obtain a construction and operating permit for the F- and H-Area High Level Waste Tank Farms. It is being submitted pursuant to the provision of Section IX of the Federal Facility Agreement (FFA) for the Savannah River Site (SRS). Comments on Revision D, of this permit application, were completed by NUS on November 2, 1990 (SRC-90-2628) at the request of G. S. Hoover. We have reviewed the current Revision 0 and offer the following additional comments.

GENERAL COMMENTS

Previous comments appear to have been incorporated in the recent revision with the exception of a general comment regarding the cooling water and storm water retention basins in F- and H-Areas. The previous comment suggested addressing both types of basins in this application, since wastewater from these basins can be rerouted to the H-Area high level waste tanks if contamination is found in the basin wastewaters. This comment is again noted for consideration.

SPECIFIC COMMENTS

1. Page xix, List of ACRONYMS - For consistency, Sodium Tetraphenylborate should be listed before Total Dynamic Head.

2. Pages 11 and 13, SCDHEC Permit Application Form - The Registered Professional Engineering Seal is missing from the engineering certifications for the In Tank Precipitation (ITP) Facility and Replacement Evaporator System sections.

3. Page 30, First Sentence - "Construction of the Consolidated Incineration Facility (CIF) is expected to begin in August 1991, with radioactive operations commencing in December 1993." Due to anticipated third round Notice of Deficiencies on the Consolidated Incineration Facility Resource Conservation and Recovery Act (RCRA) Permit applications, it is highly unlikely that construction will begin in August 1991. It is suggested that this date and the operations date of December 1993, be revised accordingly.

4. Page 103, First Paragraph - The second sentence "The water from system level water runs will be discarded to the storm sewer" should be reconsidered. Such action may constitute a violation under the Clean Water Act and it is suggested that this water be routed to an appropriate permitted outfall (i.e., F/H Effluent Treatment Facility). It should be noted that storm water discharge will soon be subject to a National Pollutant Discharge Elimination System (NPDES) permit under the recently promulgated storm water regulations.

5. <u>Page 104, Last Paragraph</u> - The first sentence "At the completion of Integrated Water Runs, the water may be drained to the Tank Farm storm sewer..." should also be reconsidered based upon the reasoning stated in comment number 4 above.

6. <u>Page 108, First Paragraph</u> - The first sentence "The temporary facility will be flushed and cleaned" should address where the flush water will be discharged. Discharge to storm sewers should be restricted.

OSR 3-4A-W (Rev1-89)

WESTINGHOUSE SAVANNAH RIVER COMPANY

INTER-OFFICE MEMORANDUM

ESH-FSG-910417

May 20, 1991

TO: R. G. GARVIN, 703-H

FROM: J. S. ROBERTS, 742-A JSR
(X5-1728)

F AND H-AREA TANK FARM WASTEWATER PERMIT APPLICATION SCHEDULE FOR SUBMISSION (U)

Ref: Memo, R. G. Garvin to J. S. Roberts, 4/29/91

Your referenced memo requested my written conformation that EPD support Waste Management's planned schedule for submitting the tank farm wastewater permit application to SCDHEC. EPD plans to continue to support Waste Management (WM) in obtaining the wastewater construction permit from SCDHEC and supports the sequence of events in the planned schedule. However, EPD does not intend to invite SCDHEC to visit the tank farms until after all concurrences and signatures have been obtained. As part of the overall strategy for obtaining the permit, the plan is to submit the application to SCDHEC during their visit.

It is my understanding that the permit application package is currently being routed for DOE concurrence.

Please contact Danny Dunaway (X5-05754) if there are any questions.

WDD: vcj
Attachment

CC: M. C. Chandler, 703-H
J. E. Crain, CAB-10
P. D. D'Entremont, 703-H
M. D. Dukes, 742-A
M. Hawkins, 742-A
W. F. Hindle, MDC-84
B. L. Lewis, 703-H
J. V. Odum, 742-A
J. A. Pike, 703-H
G. T. Wright, 703-H
Central Files, 703-A

OSR 3-4A-W (Rev1-89)

WESTINGHOUSE SAVANNAH RIVER COMPANY

INTER-OFFICE MEMORANDUM

ESH-FSG-910417

May 20, 1991

TO: R. G. GARVIN, 703-H

FROM: J. S. ROBERTS, 742-A JSR
(X5-1728)

F AND H-AREA TANK FARM WASTEWATER PERMIT APPLICATION SCHEDULE FOR SUBMISSION (U)

Ref: Memo, R. G. Garvin to J. S. Roberts, 4/29/91

Your referenced memo requested my written conformation that EPD support Waste Management's planned schedule for submitting the tank farm wastewater permit application to SCDHEC. EPD plans to continue to support Waste Management (WM) in obtaining the wastewater construction permit from SCDHEC and supports the sequence of events in the planned schedule. However, EPD does not intend to invite SCDHEC to visit the tank farms until after all concurrences and signatures have been obtained. As part of the overall strategy for obtaining the permit, the plan is to submit the application to SCDHEC during their visit.

It is my understanding that the permit application package is currently being routed for DOE concurrence.

Please contact Danny Dunaway (X5-05754) if there are any questions.

WDD: vcj
Attachment

CC: M. C. Chandler, 703-H
J. E. Crain, CAB-10
P. D. D'Entremont, 703-H
M. D. Dukes, 742-A
M. Hawkins, 742-A
W. F. Hindle, MDC-84
B. L. Lewis, 703-H
J. V. Odum, 742-A
J. A. Pike, 703-H
G. T. Wright, 703-H
Central Files, 703-A

OSR 3-4A-W (Rev1-89)

→ Joe Odum - ACTION

3

WESTINGHOUSE SAVANNAH RIVER COMPANY

INTER-OFFICE MEMORANDUM

RECEIVED
MAY - 6 1991
mg
ENVIRONMENTAL PROTECTION SECTION
WESTINGHOUSE SAVANNAH RIVER CO.

April 29, 1991

To: J. S. Roberts, 742-A Rec 5/3/91

From: R. G. Garvin, 703-H, 7-8382

F and H-Area Tank Farm Wastewater Permit Application Schedule for Submission (U)

Waste Management (WM) plans to transmit the F and H-Area Tank Farm Wastewater Permit Application to the Environmental Protection Division (EPD) within two weeks. Currently, one original of the application is circulating for signature and Professional Engineer (PE) certification. Copies will be transmitted to EPD when these signatures are obtained.

This application is important to Tank Farm operations, In-Tank Precipitation startup, and for compliance with the Federal Facilities Agreement. Attached is WM's planned schedule for submitting the application to SCDHEC. Please review this schedule and provide me with written conformation that EPD can support this effort. We appreciate EPD's assistance in the pursuit of the permit and anxiously anticipate the submission of the permit to SCDHEC.

CC: G. T. Wright, 703-H
B. L. Lewis, 703-H
M. C. Chandler, 703-H
P. D. d'Entremont, 703-H
J. A. Pike, 703-H
J. V. Odum, 742-A
W. D. Dunaway, 703-18A
J. E. Crain, CAB-10
W. F. Hindle, MDC-84
WMT Files, 703-H
File Code: 175.15

OSR 3-4A-W (Rev1-89)

WESTINGHOUSE SAVANNAH RIVER COMPANY

INTER-OFFICE MEMORANDUM

May 7, 1991

To:

G. T. Wright, 703-H
T. M. Osborne, 703-H
P. H. Stevens, 707-H
J. J. Sherpenberg, 707-H
H. A. Abodishish, 707-H
L. H. Aiken, 707-H
S. S. Cathey, 703-H
V. G. Dickert, 703-F
L. C. Thomas, 703-F
R. W. Wilson, 703-H
N. R. Davis, 241-120H
R. C. Miller, 241-120H
A. S. Greer, 241-102H
W. A. Wilson, 703-H
R. G. Garvin, 703-H
B. L. Lewis, 703-H
F. G. McNatt, 704-8H
M. C. Chandler, 703-H
P. D. d'Entremont, 703-H
M. A. Ceravolo, 703-H
B. A. Phillips, 241-102H
W. B. Van Pelt, 241-121H
T. P. Gaughan, 241-120H
C. B. Stevens, 703-H
S. D. Thomas, 703-H
S. E. Crook, 703-H
K. Z. Wolf, 704-S
W. D. Dunaway, 703-18A

Jeff Pike

From: J. A. Pike, 703-H, 7-8843

Revised Schedule for Submission of F and H Area Tank Farm Wastewater Permit Application

Attached for your information is the revised schedule for submitting the Tank Farm Wastewater Permit Application.

Schedule for Submission of F and H Area Tank Farm Wastewater Permit Application

The application will be submitted according to the following schedule (revised May 7):

	Complete by:
EPD Draft transmittal cover letter	May 8, 1991
Correct minor errors discovered in application	May 14, 1991
Obtain DOE approval to submit application	May 17, 1991
Complete WSRC Certification for Environmental Permits	May 20, 1991
Obtain Pottmeyer's signature	May 20, 1991
EPD Invite SCDHEC to visit tank farms (schedule the one day visit for the week of May 28)	May 22, 1991
SCDHEC tour dry run presentations	May 24, 1991
SCDHEC visits tank farms - submit application to SCDHEC during visit	May 31, 1991

WSRC CERTIFICATION FOR ENVIRONMENTAL PERMITS

Project Title: F AND H-AREA TANK FARMS WASTEWATER PERMIT APPLICATION
(Type or Print)

1. To be signed by preparer of application:

   I certify that I have personally examined and am familiar with the information submitted in this and all attached documents. I believe that the submitted information is true, accurate and complete.

Name (Type or Print)	Signature	Date Signed
JEFF PIKE	Jeff Pike	MAY 6, 1991

2. Manager of Facility Support Section of the Environmental Protection Department certifies, based on my inquiry of persons responsible for review of the submitted information, that the information is true accurate and complete.

Name (Type or Print)	Signature	Date Signed
	J.V. DUM	MAY 6 91

3. General Counsel's Office certifies that the attached documents comply with applicable regulatory requirements as to form.

Name (Type or Print)	Signature	Date Signed
JAMES F. JACKSON	James F. Jackson	5/7/91

OSR 3 1A-W (Rev1-89)

WESTINGHOUSE SAVANNAH RIVER COMPANY

INTER-OFFICE MEMORANDUM

NMP-WMT-910409

May 6, 1991

To: W. D. Dunaway, 703-18A

Jeff Pike

From: J. A. Pike, 703-H, 7-8843

References:

Letter, H. W. Truesdale, SCDHEC, to S. R. Wright, DOE-SR, "F/H-Area High Level Waste Tanks, Defense Waste Processing Facility (DWPF), Savannah River Site - SC1 890 008 989", June 30, 1989

Attached is the F and H-Area Tank Farm Wastewater Permit Application, Assessment Report for the In-Tank Precipitation Treatment Facility, and WSRC Certification for Environmental Permits form signed by Jeff Pike as preparer. Please obtain DOE's concurrence to transmit the application, complete the certification statement, and assist in obtaining Pottmeyer's signature. Copies will be made when all signatures are obtained. Waste Management (WM) will request that the application be submitted once all preparation requirements have been meet.

Please note that WM needs a wastewater operating permit for the ITP facilities before operating the facility with actual waste. WM plans to request that a permit be obtained first for the ITP facilities as described in the attached assessment report and then a permit for the remainder of the Tank Farm. An assessment report on the remainder of the Tank Farm will follow.

As specified in Section IX.C of the Federal Facility Agreement (FFA), the application provides the commitment to provide secondary containment on page 8. As specified in Section IX.A.2, page 9 of the application commits to providing an

annual tank inspection report covering the waste tank systems that do not meet secondary containment requirements of the FFA.

If there are any questions, please contact J. A. Pike at 7-8843.

CC:

G. T. Wright, 703-H
T. M. Osborne, 703-H
P. H. Stevens, 707-H
J. J. Sherpenberg, 707-H
H. A. Abodishish, 707-H
L. H. Aiken, 707-H
S. S. Cathey, 703-H
V. G. Dickert, 703-F
L. C. Thomas, 703-F
R. W. Wilson, 703-H
N. R. Davis, 241-120H
R. C. Miller, 241-120H
A. S. Greer, 241-102H
W. A. Wilson, 703-H
R. G. Garvin, 703-H
B. L. Lewis, 703-H
F. G. McNatt, 704-8H
M. C. Chandler, 703-H
P. D. d'Entremont, 703-H
M. A. Ceravolo, 703-H
B. A. Phillips, 241-102H
W. B. Van Pelt, 241-121H
T. P. Gaughan, 241-120H
C. B. Stevens, 703-H
S. D. Thomas, 703-H
S. E. Crook, 703-H
K. Z. Wolf, 704-S
J. V. Odum, 742-A
WMT Files, 703-H
File Code: 175.15

South Carolina Department of Health and Environmental Control

APPLICATION FOR AN AS-BUILT CONSTRUCTION PERMIT
Industrial Waste Treatment System

Name of Project: F and H-Area High-Level Radioactive Waste Tank Farms

Location: Savannah River Site (SRS) County: Aiken and Barnwell

In accordance with the provisions of Act No. 1157 of the 1970 Acts and Joint Resolutions of the General Assembly of the State of South Carolina, and the regulations of the South Carolina Department of Health and Environmental Control, I (we) hereby make application, on behalf of the owner whose name and signature appear below, for permission to construct/operate a facility to treat high-level radioactive wastewaters generated by SRS operations. Specifically, the facility is constructed to allow radioactive decay, to separate radioactive and chemical components by utilizing clarification, evaporation and precipitation/filtration treatment technologies, and to process associated by-products. The effluent and corresponding by-product wastes include: (1) evaporator overheads and treated Receiving Basin for Offsite Fuels (RBOF)/ Resin Regeneration Facility (RRF) wastes which are sent to the F/H Effluent Treatment Facility (SCDHEC Industrial Wastewater Permit #12870) for final treatment and subsequent discharge to Upper Three Runs Creek (NPDES Permit #SC0000175), (2) washed precipitate slurry and washed sludge slurry which are sent to the DWPF Vitrification Facility (Permit Application - Revision 0, dated January, 1990) for additional treatment and incorporation into borosilicate glass, and (3) decontaminated salt solution which is sent to Tank 50 (SCDHEC Industrial Wastewater Permit #14520) for subsequent transfer to the Z-Area Saltstone Manufacturing and Disposal Facility where it will be solidified (SCDHEC Industrial Wastewater Permit #12683) for on-site disposal (SCDHEC Solid Waste Permit #IWP-217).

Owner's Name, Address, and Telephone No.: United States Department of Energy, Savannah River Operations Office, P.O. Box A, Aiken, SC 29802, (803) 725-8146

Name, Address, and Telephone No. of Organization Responsible for Operation and Maintenance (if different from Owner): Westinghouse Savannah River Company, Savannah River Site, Aiken, SC 29808 as authorized representative of the owner under United States Department of Energy contract number DE-AC09-88SR18035, (803) 725-1728.

The effluent waste and treated by-products are distributed as follows:

Effluent Wastes	Primary Disposition	Maximum Annual Flow Rate (gals/year)
Evaporator Overheads	F/H Effluent Treatment Facility	29,000,000
Treated RBOF/RRF Waste	F/H Effluent Treatment Facility	Included with the evaporator overheads.
Treated By-products		
Decontaminated Salt Solution	Tank 50	13,000,000
Washed Precipitate Slurry	DWPF Vitrification Facility	800,000
Washed Sludge Slurry	DWPF Vitrification Facility	500,000

Effluent concentration of those constituents the system is designed to remove or reduce will be as follows: See Text

Coordinates of proposed point of discharge (to the nearest 5 seconds): via treatment through the F/H Effluent Treatment Facility at existing SRS Outfall H-016 (NPDES Permit #SC0000175) N 33° 16' 58" E 81° 41' 43"

ENGINEERING CERTIFICATIONS

ITP Facility

I have reviewed the information (i.e., summary specifications, process descriptions, etc.) provided in the permit application for the ITP Facility. I have placed my signature and seal on this application form signifying that to the best of my knowledge, information, and belief, the information provided accurately represents the as-built conditions for the ITP Facility.

Signed: _____ S.C. Registration No. 10976
Registered Professional Engineer

3

Independent Verification

Facility Inspection

This permit application was prepared under my direction/supervision. The information (calculations, figures, and specifictions) used to prepare this permit application were provided by the Westinghouse Savannah River Company. This information was checked under my direction/supervision and the pertinent information was used to develop the text, figures, calculations, and summary specifications contained in this permit application. I have conducted an inspection, to the extent possible, of the waste process operations and equipment at the F and H-Area HLW Tank Farms. This inspection included observing the general site conditions of the F and H-Area HLW Tank Farms; viewing waste process equipment layout for the ITP filtration building, HDB8 (including HPP7 to HPP10), and Auxilliaray Pump Pit (APP); observing control rooms for the 242-1H and 242-16F evaporator systems, and ITP process operations; reviewing procedures for tank farm operations and inspections; observing the collection of surveillance photographs for Tank 14; viewing historical photographs for several waste tanks (including annulus photographs for Tanks 14, 46, 48 and 49, and internal photographs for Tank 48); viewing historical videos for the internal containment areas including 242-1F and 242-1H evaporator systems, HDB2, and FDB1; viewing historical photographs for HDB1 and the Type I waste lines in H-Area; observing surveillance/inspection activities for Tanks 9-16, 25-28, 33-34, and 44-47, and support facilities (ie., cooling water towers/pump room and emergency generators); visually inspecting the hold tank area for the 242-H, 242-16F, and 242-16H evaporator systems; and looking at various pieces of new process equipment (i.e., jumpers and a Cesium Removal Column). Based upon this inspection and the information provided to me by the Westinghouse Savannah River Company, I certify that, to the best of my knowledge, information and belief, this permit application accurately represents the current operations being conducted at the F and H-Area HLW Tank Farms.

Signed: Richard L Stegen S.C. Registration No. 12633
Registered Professional Engineer

SOUTH CAROLINA REGISTERED PROFESSIONAL ENGINEER No. 12633 RICHARD L. STEGEN

AUTHORIZED REPRESENTATIVE CERTIFICATION

I have reviewed this application and to the best of my knowledge, information, and belief I agree to the requirements and conditions that are contained in it. This permit application was prepared under the direction/supervision of an independent Registered Professional Engineer. The permit application has not been altered in any way upon being signed by the Registered Professional Engineer. Also, I agree to the admission of properly authorized persons at all reasonable hours for the purpose of sampling and inspection.

Signed: E W Pottmeyer Date: 6/21/91
Edward W. Pottmeyer, Jr.
Vice-President and General Manager
Nuclear Materials Processing Division

OSR 3-4A-W (Rev1-89)

WESTINGHOUSE SAVANNAH RIVER COMPANY

INTER-OFFICE MEMORANDUM

April 5, 1991

To:

G. T. Wright, 703-H
T. M. Osborne, 703-H
P. H. Stevens, 707-H
J. J. Sherpenberg, 707-H
H. A. Abodishish, 707-H
L. H. Aiken, 707-H
S. S. Cathey, 703-H
L. C. Thomas, 703-F
R. W. Wilson, 703-H
N. R. Davis, 241-120H
R. C. Miller, 241-120H
A. S. Greer, 241-102H
W. A. Wilson, 703-H
R. G. Garvin, 703-H
B. L. Lewis, 703-H
F. G. McNatt, 704-8H
M. C. Chandler, 703-H
P. D. d'Entremont, 703-H
M. A. Ceravolo, 703-H
B. A. Phillips, 241-102H
W. B. Van Pelt, 241-121H
T. P. Gaughan, 241-120H
C. B. Stevens, 703-H
S. E. Crook, 703-H
K. Z. Wolf, 704-S
W. D. Dunaway, 703-18A

From: J. A. Pike, 703-H, 7-8843

Revised Schedule for Submission of F and H Area Tank Farm Wastewater Permit Application

Attached for your information are two items showing the revised schedule for submitting the Tank Farm Wastewater Permit Application and proposed agenda for SCDHEC's tour of the Tank Farms.

Schedule

The wastewater permit will be submitted according to the following schedule:

	Start	Finish
C. T. Main completes wastewater permit application		April 15, 1991
C. T. Main completes ITP Tank Assessment Report		April 15, 1991
Fill out WSRC Certification for Environmental Permits	April 15, 1991	April 18, 1991
Draft transmittal cover letter	April 15, 1991	April 18, 1991
Circulate permit application for PE Stamps	April 15, 1991	April 19, 1991
Obtain Potmeyer's signature	April 18, 1991	April 22, 1991
Obtain DOE approval to submit application	April 22, 1991	April 29, 1991
EPD Invite SCDHEC to visit tank farms (schedule the one day visit for the week of May 6)	April 29, 1991	May 3, 1991
SCDHEC tour dry run presentations	April 29, 1991	May 3, 1991
SCDHEC visits tank farms - submit application to SCDHEC during visit	May 6, 1991	May 10, 1991

Proposed SCDHEC Tour Agenda

SCDHEC will need hard hats, safety glasses, temporary TLD badges and Fastscans. SCDHEC will be provided with similar flow diagrams and sketches from the Wastewater Permit Application and/or Tank Assessment Report to follow along during the tour and make any notes. Flow diagrams may need to be setup on easel boards along the tour route.

Time	Item	Lead Org./Point of Contact
8:30	Arrive at 700 Area Badging Fastscans/TLD Badges	EPD - W. D. Dunaway/DOE
10:00	Arrive at H-Area (703-H, Rm 71) Introductions Overview of WM and Tank Farms	 WM - R. G. Garvin WM - B. L. Lewis
10:20	Process overview as presented in permit application including waste removal and information on In-Tank Precipitation permit status	WM - P. D. d'Entremont
11:20	Tank Inspection Program	WM - F. G. McNatt
12:00	Lunch	
12:45	Travel to F-Area	
1:00	Tour of F-Area Tank Farm Waste Receipt Tanks Diversion Boxes and Pump Pits F-Area Evaporators Concentrate Receipt Tanks	WM - L. C. Thomas P. D. d'Entremont
1:30	Travel to H-Area	
1:45	New Waste Transfer Facilities (HDB-8, 241-102H)	WM - L. C. Thomas B. A. Phillips

2:10	In-Tank Precipitation	WM - N. R. Davis
2:45	Break	
3:00	General Review of Permit Application Clarify any questions (703-H, rm. 71)	WM - J. A. Pike
3:45	Discuss Path Forward	WM and EPD W. D. Dunaway
4:00	End meeting	
4:30	Exit Fastscans (773-A)	

It is not clear if SRS can list several operators in charge and detail the scope of responsibility for each operator. The H-S Inter-Area Transfer Line is within the scope of the Tank Farm Wastewater Permit Application but is a DWPF facility rather than a Tank Farm facility. This conflict of ownership can to be resolved if SCDHEC allows specific scopes of responsibilities to listed for each operator. This issue will be discussed during the last portion of the tour/presentations.

CC: J. V. Odum, 742-A
R. E. Walker, BTC-B14-054
J. H. Travis, III, MDC-112
V. B. Wheeler, 703-H
WMT Files, 703-H
File Code: 175.15

Westinghouse
Savannah River Company

P.O. Box 616
Aiken, SC 29802

NPD-WMT-910292

April 1, 1991

J. F. Stein
Chas. T. Main, Inc.
4701 Hedgemore Dr.
Charlotte, NC 28209

Mr. Stein:

EWR 863190 - F & H Area Tank Farm Permitting
Comments to Revision 0

Attached are additional comments about the Tank Farm Wastewater Permit Application Revision 0. Also attached are comments on the Phase I Tank Assessment Report for ITP Facilities.

Most comments require relatively small amount of effort to correct. Most comments are typos or slight word changes. Comments on the Tank Assessment Report are suggested only for technical accuracy. Please insure accurate incorporation of these changes for the final wastewater permit application. Please call me to work out any details of any comments not fully understood.

Review of another draft is not needed. Once the comments are incorporated, please proceed to obtain Mr. Stegen's certification on at least one copy. Have Mr. Stegen send the copy of the wastewater permit application directly to me so I may arrange certification by the other Registered Professional Engineers.

If there are any questions, please call me at (803)-557-8843.

Sincerely,

Jeff Pike

Jeff Pike
Engineer, Waste Management Technology

CC: (without attachments)

G. T. Wright, 703-H
S. S. Cathey, 703-H
R. W. Wilson, 703-H
L. C. Thomas, 703-F
R. G. Garvin, 703-H
B. L. Lewis, 703-H
M. C. Chandler, 703-H
P. D. d'Entremont, 703-H
W. B. Van Pelt, 241-121H
T. P. Gaughan, 241-120H
C. B. Stevens, 703-H
L. H. Aiken, 707-H
S. E. Crook, 703-H
W. D. Dunaway, 703-A
R. E. Walker, BTC-B14-054, N. Augusta
V. Wheeler, 703-H
WMT Files, 703-H
File Code: 175.15

OSR 3-4A-W (Rev1-89)

WESTINGHOUSE SAVANNAH RIVER COMPANY

INTER-OFFICE MEMORANDUM

March 18, 1991

To: L. C. Thomas, 703-F
R. W. Wilson, 703-H
A. S. Greer, 241-102H
G. Dickert, 703-F
W. A. Wilson, 703-H
R. G. Garvin, 703-H
K. S. Wierzbicki, 703-H
B. L. Lewis, 703-H
B. A. Phillips, 241-102H
F. G. McNatt, 704-8H
P. D. d'Entremont, 703-H
W. B. Van Pelt, 241-121H
T. P. Gaughan, 241-120H
L. H. Aiken, 707-H
K. Z. Wolf, 704-S
C. McFall, DOE, 703-H

Jeff Pike

From: J. A. Pike, 703-H, 7-8843

Slides from Informational Meeting for Submission of Tank Farm Wastewater Permit Application

Attached are copies of the slides I presented during todays meeting.

If there are any questions or comments, please call me at 7-8843.

CC: G. T. Wright, 703-H
T. M. Osborne, 703-H
S. S. Cathey, 703-H
N. R. Davis, 241-120H
W. D. Dunaway, 703-18A
WMT Files, 703-H
File Code: 175.15

Handouts: Wastewater Permit Application

Wastewater Permit Application

Informational Meeting for Submission of the F and H-Area Tank Farm Wastewater Permit Application

March 18, 1991

by Jeff Pike

Agenda

- Review of Tank Farm Wastewater Permit Application Contents.
- Waste Management Commitments in the Application.
- Operating Requirements for a Permitted Facility as applied to the Tank Farms.
- Review and Finalize SCDHEC Tour Agenda.

Typical Wastewater Plant

Typical Wastewater Treatment Plant

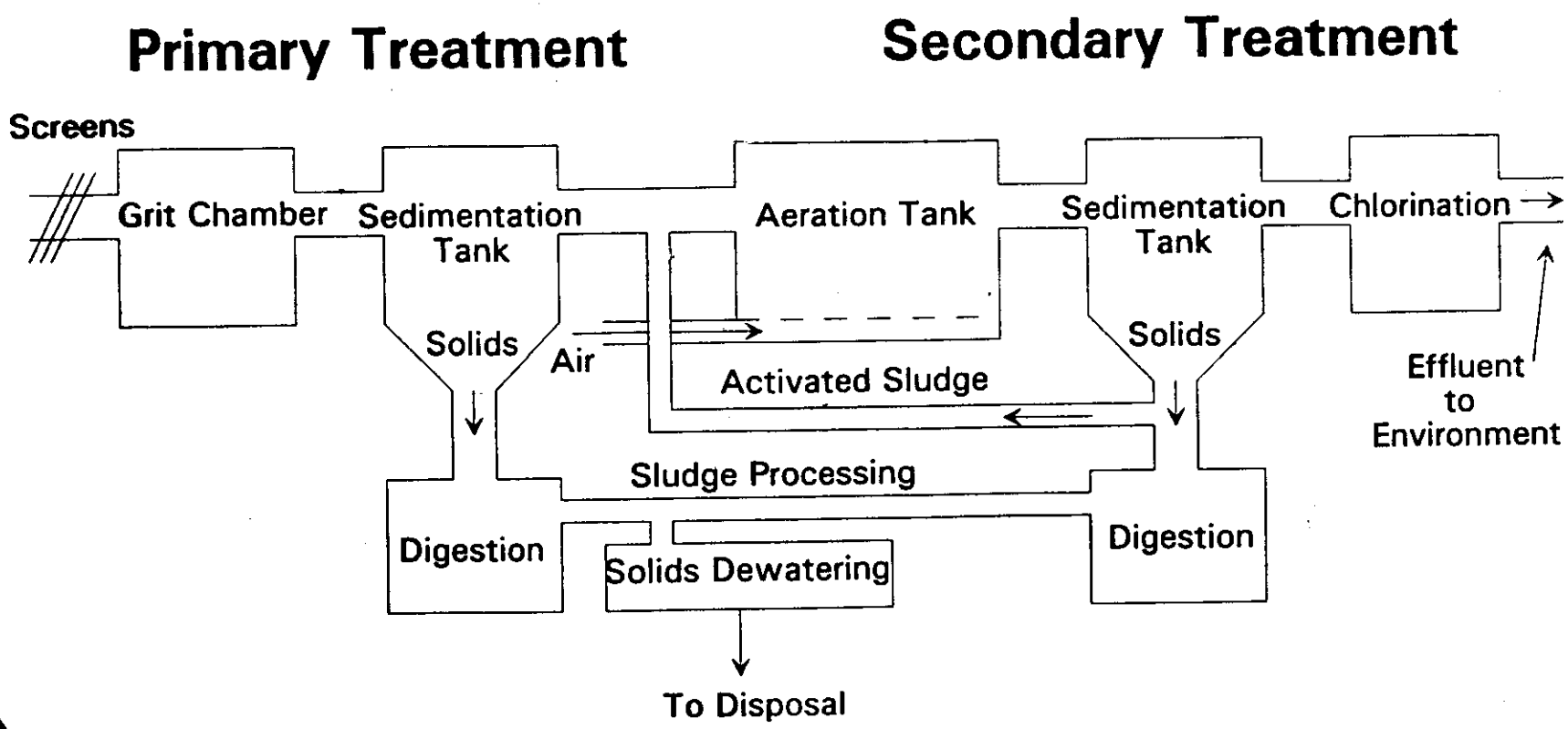

SRS Wastewater Plant Analogy

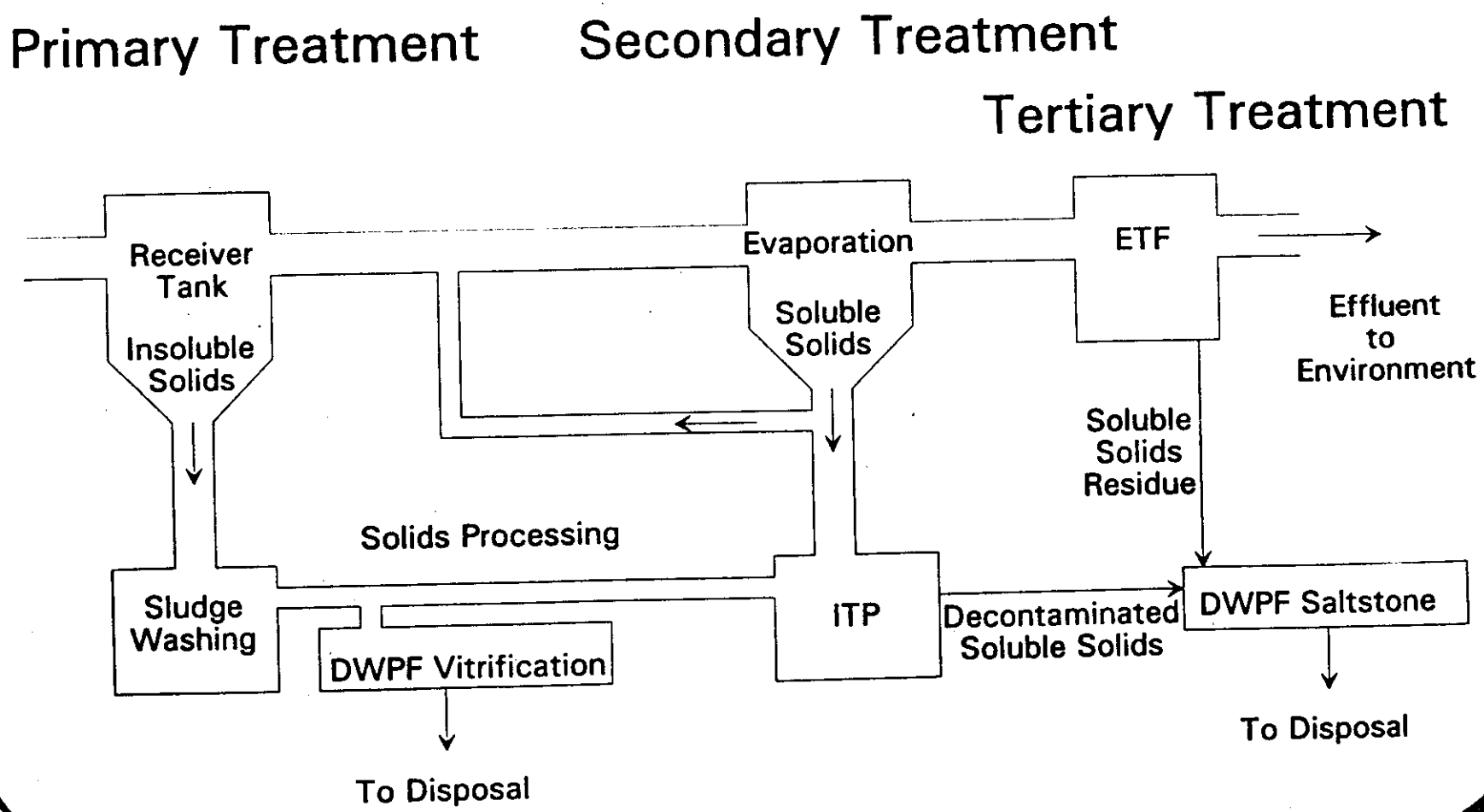

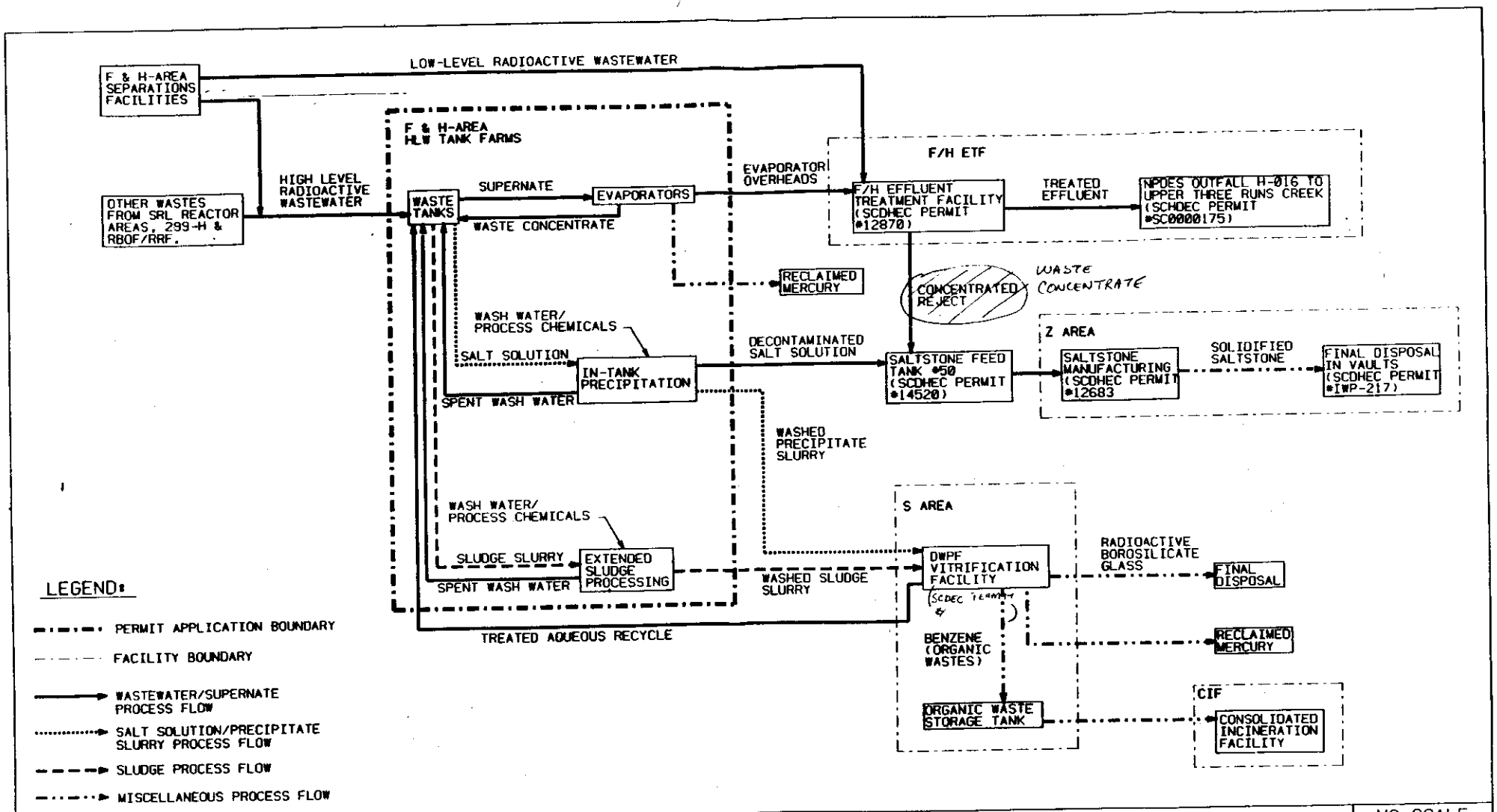

CAD NO.	TITLE	NO SCALE
SE5-2-2006190	FIGURE 3-1 INTEGRATED WASTEWATER TREATMENT FLOW DIAGRAM	6000-44-3190W

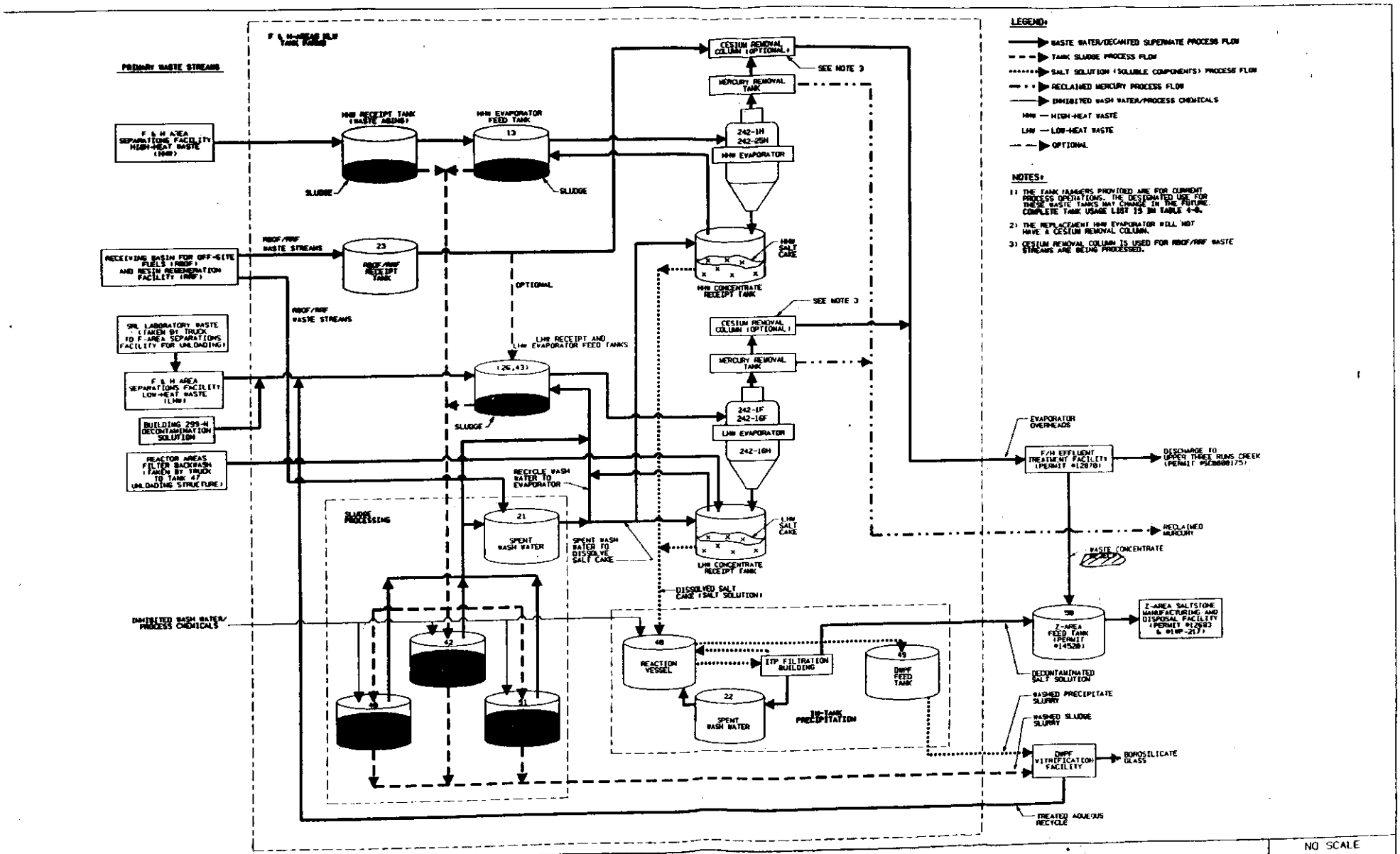

AD NO.

TITLE:

FIGURE 4-1

OVERALL FLOW DIAGRAM

Normal Operations

- Equipment Replacement with Identical Equipment.
- Jumper Changes.
- Tank Usage Changes.
- Process Chemical Additions for:
  - pH, [NO_2] Adjustment for Corrosion Inhibition,
  - Waste Removal,
  - Cleaning/Decontamination of Facilities/Equipment,
  - ITP Operations,
  - Sludge Washing Operations.

Evaporator Pot

Fig. 4-5

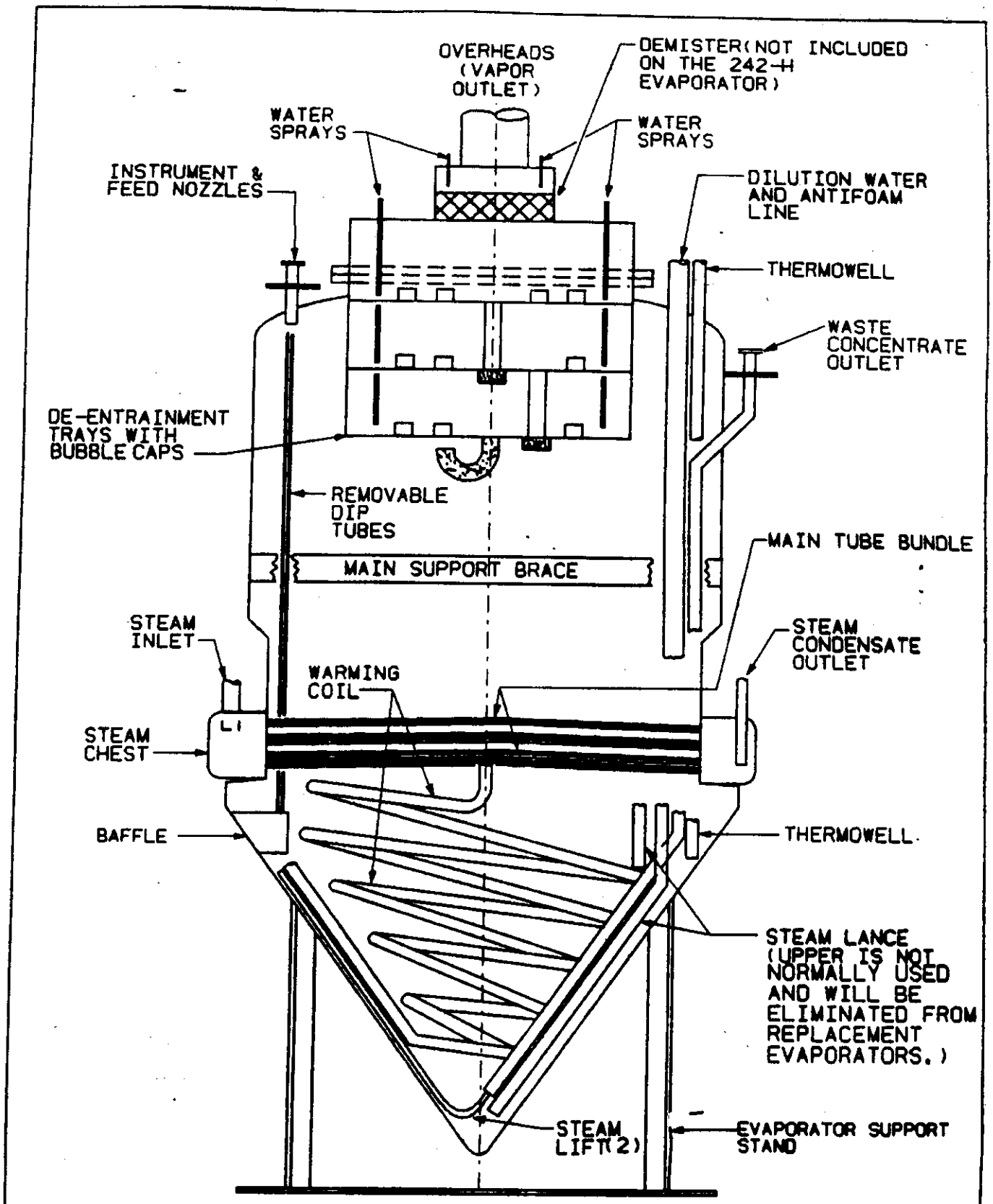

CAD NO.	FIGURE 4-5	NO SCALE
SE5-2-2006188	TYPICAL EVAPORATOR VESSEL	6000-44-3190W

TABLE 7-1

EVAPORATOR POT SPECIFICATIONS
(242-F Evaporator System)

DESCRIPTION	SPECIFICATION
Year Installed	1977
Evaporator Pot	
Approximate Dimensions (diameter, height)	8' D X 16' 5½" H
Capacity, Designed Liquid Level (working)	1800 GALLONS
Capacity, Overheads Flow Rate (average)	6 GPM
Shell Thickness	3/8 INCH
Material of Construction	304L STAINLESS STEEL
Design Temperature	320°F
Design Pressure	15 PSIG
Heater Tube Bundle	
Dimension (diameter, length)	0.75" O.D. X 7.5' L
Number of Tubes (maximum)	233 BENT TUBES
Material of Construction	14 GAUGE, 304L STAINLESS STEEL
De-entrainment Bubble Cap Trays	
Dimensions (diameter, height)	4' D X 3' H
Number of Trays	3
Bubble Caps per Tray	20 NO. 58 MODIFIED GLITCH
Material of Construction	304L STAINLESS STEEL
Demister	
Dimensions (diameter, height)	25" D x 8" H
Material of Construction	304L STAINLESS STEEL

Evaporator Pot Specifications

Table 7-1

Alterations

Adding or Removing:

- **Agitators, Slurry Pumps, Transfer Pumps to Waste Tanks,**
- **Process Instruments,**
- **Process Piping - Valves, Jumpers, Waste Transfer Lines.**

Flexibility of Operations

Permit Modifications will be filed if:

- Adding Treatment Capacity,
- Creating New Treatment Processes, or
- Altering Existing Processes which cause:
  - Effluent Waste Characteristics to be Exceeded, or
  - Increases Effluent Flow Rates above limits on Application.

Influent Waste Characteristics

F-Area High-Heat

Water (wt. %)	55 - 89
Solubles (wt. %)	10 - 40
Insolubles (wt. %)	1 - 5
pH (standard units)	12 - 14
Total Carbon (mg/l)	n/a
Radionuclides (Ci/gal)	360 - 470

Effluent Flow Rates

Effluent Wastes	*Maximum Flow Rate (gal/year)*
Evaporator Overheads	29,000,000
Treated RBOF/RRF Waste	Included Above
Contaminated Storm Water/Cooling Water	Occasional
Treated By-Products	
Decontaminated Salt Solution	13,000,000
Washed Precipitate Slurry	800,000
Washed Sludge Slurry	500,000

Special Considerations - Pumps

- Three Types:
  - Dedicated Service Transfer Pumps,
  - General Service Transfer Pumps,
  - Slurry Pumps.
- Pump Specifications divided into:
  - Pump location,
  - Current Pump occupying a location (includes pump curves but no calculations).

Handouts: Wastewater Permit Application

Permit Application Process

- Prepare Application (needs PE review and stamp).
- EPD Review and Comment
- DOE-SR Review/Approval.
- Transmit to SCDHEC.
- Permit Revision/Respond to SCDHEC Comments.
- Obtain Construction Permit.
- Submit PE Letter certifying construction.
- Obtain Operating Permit.

Commitments

- Operate within description presented in application.
- Submit an application to modify the existing ETF Process Sewer to 242-25H Evaporator.
- Provide construction certification statement for 242-25H when construced.
- Submit an annual tank inspection report by July 1 each year for all tank systems not meeting secondary containment requirements.
- Provide secondary containment for all tank systems or components installed or replaced.

Handouts: Wastewater Permit Application

Tank Assessment Report

ITP Tank Assessment Report:

- **Installation of liner extension in Hold Tank Area.**
- **Leak test filtrate lines embedded in concrete once per ITP operating cycle and daily radiation surveys of exterior concrete wall of filtrate cells.**

Tank Farm Tank Assessment Report:

- **Provide integrity assessment of 242-H and 242-F Evaporator overheads facilities prior to restart.**
- **Others to be determined.**

Reporting Requirements

- **Annual Tank Inspection Report by July 1 each year.**
- **Others as specified by SCDHEC**

OSR 3-4A-W (Rev1-89)

WESTINGHOUSE SAVANNAH RIVER COMPANY

INTER-OFFICE MEMORANDUM

cc: Monte Hawkins ✓
Bobby James ✓

March 12, 1991

To: G. T. Wright, 703-H
S. S. Cathey, 703-H
L. C. Thomas, 703-F
R. W. Wilson, 703-H
N. R. Davis, 241-120H
R. G. Garvin, 703-H
B. A. Phillips, 241-102H
F. G. McNatt, 704-8H
P. D. d'Entremont, 703-H
W. D. Dunaway, 703-18A

Jeff Pike

From: J. A. Pike, 703-H, 7-8843

Informational Meeting for Submission of F and H Area Tank Farm Wastewater Permit Application

Please plan to attend a meeting held on March 18, 1991, 703-H, room 72, 11:00 am - 1:00 pm. The Agenda is as follows:

Review of Tank Farm Wastewater Permit Application Contents	J. A. Pike
Waste Management Commitments in the Application	J. A. Pike
Operating Requirements for a Permitted Facility as applied to the Tank Farms	P. D. d'Entremont
Review and Finalize SCDHEC Tour Agenda	J. A. Pike

Attached are two items showing the current schedule for submitting the Tank Farm Wastewater Permit Application and proposed agenda for SCDHEC's tour of the Tank Farms. Please review and comment on the proposed tour agenda for SCDHEC before or at the meeting.

Schedule

The wastewater permit will be submitted according to the following schedule:

	Start	Finish
Resolve ITP secondary containment concerns		March 13, 1991
Draft transmittal cover letter	March 13, 1991	March 20, 1991
C. T. Main completes wastewater permit application		March 20, 1991
C. T. Main completes ITP Tank Assessment Report		March 20, 1991
Schedule SCDHEC to visit tank farms	March 18, 1991	March 22, 1991
Fill out WSRC Certification for Environmental Permits	March 18, 1991	March 22, 1991
Obtain DOE approval to submit application	March 20, 1991	March 27, 1991
Circulate permit application for PE Stamps	March 20, 1991	March 27, 1991
Obtain Potmeyer's signature	March 20, 1991	March 27, 1991
SCDHEC tour dry run presentations	March 25, 1991	March 28, 1991
SCDHEC visits tank farms - submit application to SCDHEC during visit	April 1, 1991	April 5, 1991

Proposed SCDHEC Tour Agenda

SCDHEC will need hard hats, safety glasses, temporary TLD badges and Fastscans. SCDHEC will be provided with similar flow diagrams and sketches from the Wastewater Permit Application and/or Tank Assessment Report to follow along during the tour and make any notes. Flow diagrams may need to be setup on easel boards along the tour route.

Time	Item	Lead Org./Point of Contact
8:30	Arrive at 700 Area Badging Fastscans/TLD Badges	EPD - W. D. Dunaway/DOE
10:00	Arrive at H-Area (703-H, Rm 71) Introductions Overview of WM and Tank Farms	 WM - R. G. Garvin WM - B. L. Lewis
10:20	Process overview as presented in permit application including waste removal and information on In-Tank Precipitation permit status	WM - P. D. d'Entremont
11:20	Tank Inspection Program	WM - F. G. McNatt
12:00	Lunch	
12:45	Travel to F-Area	
1:00	Tour of F-Area Tank Farm Waste Receipt Tanks Diversion Boxes and Pump Pits F-Area Evaporators Concentrate Receipt Tanks	WM - L. C. Thomas P. D. d'Entremont
1:30	Travel to H-Area	
1:45	New Waste Transfer Facilities (HDB-8, 241-102H)	WM - L. C. Thomas B. A. Phillips

2:10	In-Tank Precipitation	WM - N. R. Davis
2:45	Break	
3:00	General Review of Permit Application Clarify any questions (703-H, rm. 71)	WM - J. A. Pike
3:45	Discuss Path Forward	WM and EPD W. D. Dunaway
4:00	End meeting	
4:30	Exit Fastscans (773-A)	

It is not clear if SRS can list several operators in charge and detail the scope of responsibility for each operator. The H-S Inter-Area Transfer Line is within the scope of the Tank Farm Wastewater Permit Application but is a DWPF facility rather than a Tank Farm facility. This conflict of ownership can to be resolved if SCDHEC allows specific scopes of responsibilities to listed for each operator. This issue will be discussed during the last portion of the tour/presentations.

CC: T. M. Osborne, 703-H
R. C. Miller, 241-120H
A. S. Greer, 241-102H
J. B. Crosby, 241-102H
W. A. Wilson, 703-H
W. H. Fulton, 705-H
P. H. Stevens, 707-H
J. J. Sherpenberg, 707-H
H. A. Abodishish, 707-H
L. H. Aiken, 707-H
B. L. Lewis, 703-H
M. A. Ceravolo, 703-H
W. B. Van Pelt, 241-121H
T. P. Gaughan, 241-120H
K. S. Wierzbicki, 703-H
C. B. Stevens, 703-H
S. E. Crook, 703-H
J. V. Odum, 742-A
J. H. Travis, III, MDC-112
V. B. Wheeler, 703-H
WMT Files, 703-H
File Code: 175.15

Westinghouse
Savannah River Company

P.O. Box 616
Aiken, SC 29802

NPD-WMT-910226

March 11, 1991

J. F. Stein
Chas. T. Main, Inc.
4701 Hedgemore Dr.
Charlotte, NC 28209

Mr. Stein:

EWR 863190 - F & H Area Tank Farm Permitting
Comments to Revision 0

Attached are comments about the Tank Farm Wastewater Permit Application Revision 0.

Several typos throughout the document need to be corrected. Most comments require relatively small amount of effort to correct. Most comments are from unincorporated or improperly incorporated comments. A few comments are based on new additions made to the permit application without prior knowledge. Please insure accurate incorporation of these changes for the final document. Please call me to work out any details of any comments not fully understood.

Also attached are the pump curves and information needed for transfer pumps in tank 48, 49, 40, 51, and 42.

Review of another draft is not needed. Once the comments are incorporated, please proceed to obtain Mr. Stegen's certification on at least one copy. Have Mr. Stegen send the copy directly to me so I may arrange certification by the other Registered Professional Engineers.

For the Phase II Tank Assessment Report, the 242-H Checkout and Startup of Water Runs Procedure is attached for your information. The procedure will outline what Operations plans to perform in terms of leak/integrity checks. Please let me know if there is a need to add any actions or check offs to this procedure to satisfy our needs to perform a leak check prior to operation.

If there are any questions, please call me at (803)-557-8843.

Sincerely,

Jeff Pike

Jeff Pike
Engineer, Waste Management Technology

CC: (without attachments)

G. T. Wright, 703-H
S. S. Cathey, 703-H
R. W. Wilson, 703-H
L. C. Thomas, 703-F
N. R. Davis, 241-120H
K. Uzochukwu, 703-H
R. G. Garvin, 703-H
B. L. Lewis, 703-H
P. D. d'Entremont, 703-H
W. B. Van Pelt, 241-121H
T. P. Gaughan, 241-120H
M. A. Ceravolo, 242-24H
D. F. Brown, 703-H
C. B. Stevens, 703-H
J. J. Scherpenberg, 707-H
S. E. Crook, 703-H
J. W. Nelson, TC-S2
W. D. Dunaway, 703-A
R. E. Walker, BTC-B14-054, N. Augusta
V. Wheeler, 703-H
WMT Files, 703-H
File Code: 175.15

1

ESH-FSG-91DRAFT

February 25, 1991

Mr. J. B. Ruiter, Division Director
Industrial and Agricultural Wastewater Division
South Carolina Department of
Health and Environmental Control
2600 Bull Street
Columbia, South Carolina 29201

Dear Mr. Ruiter:

F&H AREA HIGH LEVEL RADIOACTIVE WASTE (HLRW) TANK FARMS (U)

Ref: Letter, J. V. Odum to J. B Ruiter, 8/20/90

The Federal Facilities Agreement (FFA) will require that the F&H Area HLRW tank farm be permitted pursuant to the South Carolina Pollution Control Act (wastewater). Currently, the tank farm is permitted under RCRA interim status Part A. The referenced letter identified four new facilities in the HLRW tank farm that are scheduled for start of construction or operational startup under RCRA interim status prior to submittal and approval of a wastewater construction permit. Those facilities are: New Waste Transfer Facility (HDB-8), In-Tank Precipitation (ITP), Replacement High-Level Waste Evaporator (RHLWE), and H-S Inter-Area Transfer Line (IAL). The purpose of this letter is to update the project status of those facilities (Attached Table I).

Note that the new schedule for ITP calls for the start of cold chemical runs (4/91) under interim status and the start of normal operations (7/91) after receipt of the wastewater permit. It is anticipated that the wastewater construction permit will be submitted sometime in March or early April.

Please contact W. D. Dunaway (725-5754) should you have any questions.

This schedule supports startup of DWPF.

Yours very truly,

J. V. Odum, Manager
Facility Support Section
Environmental Protection Department

WDD : vcj
Attachments

cc: S. R. Wright, 703-41A (2)
R. K. Cauthen, SCDHEC-Aiken
bcc: H. W. Truesdale

Call Pike 7-8843
Maybe only cover letter w/permit app.

TABLE I

NEW FACILITIES STATUS SUMMARY

PROJECT	% COMPLETE	STATUS
HDB-8	98%	COLD WATER RUNS BEGIN 10/91 NORMAL OPERATIONS BEGIN 8/92
ITP	98%	COLD CHEMICAL RUNS BEGIN 4/91 NORMAL OPERATIONS BEGIN 7/91
RHLWE	0%	CONSTRUCTION BEGINS 1Q91 NORMAL OPERATIONS BEGIN 1994
H-S IAL	99%	DWPF CHEMICAL SIMULANT RUNS BEGIN 8/91 NORMAL OPERATIONS BEGIN 8/92

3

CC: R. G. Garvin, 703-H
S. S. Cathey, 703-H
P. H. Stevens, 703-H
J. J. Scherpenberg, 707-H
L. H. Aiken, 707-H
B. L. Lewis, 703-H
P. D. d'Entremont, 703-H
K. S. Weirzbicki, 703-H
C. B. Stevens, 703-H
K. Z. Wolf, 704-S
WMT File, 703-H
File Code: WM-175.15

OSR 3-4A-W (Rev1-89)

WESTINGHOUSE SAVANNAH RIVER COMPANY

INTER-OFFICE MEMORANDUM

NMP-WMT-910133

February 6, 1991

TO: W. D. Dunaway, 703-18A Rec'd 2/11

Jeff Pike

FROM: J. A. Pike, 703-H

F and H Area Tank Farm Wastewater Permit Application
Permitting Status Report to SCDHEC

Would you please arrange for transmittal of the attached information to the current director at SCDHEC.

As requested in our meeting January 15, 1991, the attached information updates the information sent to SCDHEC in a letter from J. V. Odum to J. B. Ruiter [SCDHEC], ESH-FSG-900502, on August 20, 1990. Several of the project schedules have changed since that letter has been sent. SCDHEC should be informed of these changes prior to the submission of the Tank Farm Wastewater Permit Application in order to avoid surprising SCDHEC about our request to permit ITP first.

As discussed during our meeting, a wastewater permit for the ITP facilities will be requested separately and prior to the entire Tank Farm Permit. WM requests SCDHEC approval of the wastewater permit for the ITP facilities first to prevent delays in feed preparation for the DWPF Vitrification Facility. An ITP specific Tank Assessment Report is essentially complete today and can be submitted with the wastewater permit application as required by the Federal Facilities Agreement (FFA).

If you have any questions, please call me at 7-8982

SRS HLRW TANK FARM NEW FACILITIES STATUS UPDATE

INTRODUCTION

SRS is in the process of applying for a wastewater permit from SCDHEC for the High Level Radioactive Waste (HLRW) Tank Farms. The following discussion updates the status of new facilities that SRS plans to start construction or start up in the near future.

DISCUSSION

Previously, SRS identified four new facilities that are affected by the transition to wastewater: the New Waste Transfer Facility (HDB-8), In-Tank Precipitation (ITP), Replacement High-Level Waste Evaporator (RHLWE), and H-S Inter-Area Transfer Line (IAL). Each of these facilities will be either constructed or under construction by the time the permit is received. Table 1 details the updated status of each new facility.

The HDB-8 facility startup schedule has changed slightly as shown in Table 1.

ITP Chemical Cold Runs will begin prior to wastewater permit approval. ITP will begin normal radioactive operations after a wastewater permit is approved. Chemical Cold Runs referred to in Table 1 mean full operation on simulated wastes e.g. chemically equivalent simulated solutions without any of the radioactive isotopes. This type of operation will occur prior to the wastewater permit approval.

The RHLWE project schedule has not changed.

The H-S IAL connects the H-Area HLRW Tank Farm to the S-Area DWPF Vitrification Facility. The use of H-S IAL has been included in the wastewater permit application Cold Runs Addendum for the DWPF Vitrification Facility. Cold runs use of the line will be limited to introducing simulated Vitrification Facility feed at one of two pump pits and pumping the feed to the Vitrification facility.

Table 1

New Facilities Status Summary

Project		Operational Status	Permitting Status
Complete			
HDB-8	98%	Cold Water Runs begin 10/91 Normal Operations begin 8/92	Included in RCRA Part A permit. Will be included with the tank farm's wastewater permit application. Operation may begin prior to permit approval.
ITP	98%	Cold Chemical Runs begin 4/91 Normal Operations begin 7/91	Included in RCRA Part A permit. Will be included with the tank farm's wastewater permit application. Cold Runs will begin prior to wastewater permit approval. Normal Operations will occur after an approved permit is received.
RHLWE	0%	Construction begins 1st quarter 91 Normal Operations begin 1994	Will be included with the tank farm's wastewater permit application. Operation will not begin prior to receiving an approved wastewater permit.
H-S IAL	99%	DWPF Chemical Simulant Runs Begin 8/91 Normal Operations begin 8/92	Included in RCRA Part A permit. Will be included with the tank farm's wastewater permit application. Use of facility is included in DWPF Vitrification Facility cold runs addendum and will not start operation until addendum is approved. Normal operation will start after waste water permit approval.

OSR 3-4A-W (Rev1-89)

WESTINGHOUSE SAVANNAH RIVER COMPANY

INTER-OFFICE MEMORANDUM

February 6, 1991

To: L. C. Thomas, 703-F
R. W. Wilson, 703-H
A. S. Greer, 241-102H
J. B. Crosby, 241-102H
N. R. Davis, 241-120H
W. A. Wilson, 703-H
F. G. McNatt, 704-8H
P. D. d'Entremont, 703-H
W. D. Dunaway, 703-18A Rec'd 2/11

Jeff Pike

From: J. A. Pike, 703-H, 7-8843

Strategy for Submission of F and H Area Tank Farm Wastewater Permit Application

References:

1. M. E. Johnson to Distribution, Process Vent Regulation Meeting Conclusions, ESH-FSG-900651, September, 1990.

Summary

Attached are two items showing the current approach and schedule for submitting the Tank Farm Wastewater Permit Application. SCDHEC will be invited to tour the Tank Farms prior to submitting the permit application. Please review and comment on the proposed tour agenda for SCDHEC.

Strategy

Due to RCRA Process Vent and Equipment Leak Regulations (reference 1), the ITP will startup after a wastewater permit is issued. The Federal Facilities Agreement (FFA) requires a secondary containment/structural integrity Tank Assessment Report to be submitted along with the wastewater permit application. The Tank Assessment Report will not be completed until mid March. In order to support the startup schedule of ITP, a Tank Assessment Report for the ITP Facilities will be completed and submitted with the

wastewater permit application. The Tank Assessment Report for the all tank farm facilities will be submitted at a later date. A wastewater permit for ITP facilities will be sought first on a priority basis and the rest of the tank farm will follow after the Tank Assessment Report for the tank farms is submitted.

Schedule

The wastewater permit will be submitted according to the following schedule:

	Start	Finish	
Resolve J. Travis, PE, concerns		Feb. 8, 1991	2/25 IP
Resolve ITP secondary containment concerns		Feb. 8, 1991	IP
Letter to SCDHEC about new project status update	Feb. 1, 1991	Feb. 8, 1991	X
Letter from DOE to PE's that guarantees application will be issued unaltered	Feb. 5, 1991	Feb. 22, 1991	X
Schedule SCDHEC to visit tank farms	Feb. 19, 1991	Feb. 22, 1991	
C. T. Main completes wastewater permit application		Feb. 25, 1991	
C. T. Main completes ITP Tank Assessment Report		Feb. 25, 1991	2/26
Obtain DOE approval to submit application	Feb. 25, 1991	March 11, 1991	
Circulate wastewater permit application for PE Stamps	Feb. 25, 1991	March 1, 1991	
→ obtain WSRC Certification			
Obtain Potmeyer's Signature	Feb. 25, 1991	March 1, 1991	
SCDHEC tour dry run and dry run presentations	March 4, 1991	March 8, 1991	
SCDHEC visits tank farms	March 11, 1991	March 15, 1991	
Submit permit to SCDHEC during visit	March 11, 1991	March 15, 1991	

DOE

Today!

- Do they need a copy
- Stooner for approval

within last 12 months

Proposed SCDHEC Tour Agenda

SCDHEC will need temporary TLD badges and Fastscans. SCDHEC will be provided with similar flow diagrams and sketches from the Wastewater Permit Application and/or Tank Assessment Report to follow along during the tour and make any notes. Flow diagrams need to be setup on easel boards along the tour route.

Time	Item	Lead Org./Point of Contact
8:30-9:00	SCDHEC arrive at 700 Area	EPD/DOE meet
9:30	SCDHEC arrive at F-Area Introductions Overview of WM and Tank Farms	WM - B. L. Lewis ()
10:00	Process overview as presented in permit application including waste removal and general information on ITP	WM - P. D. d'Entremont ()
10:45	Tour Waste Receipt Tanks (Diversion Boxes and Pump Pits) F-Area Evaporators Concentrate Receipt Tanks	WM - P. D. d'Entremont ()
11:45	Lunch	
12:30	Travel to H-Area	
12:45	Tank Inspection Program	WM - F. G. McNatt (704-8H)
1:30	HDB-8	WM - A. S. Greer (241-102H)
2:00	ITP Facilities	WM - N. R. Davis ()
3:00	Break	
3:15	General Review of Permit Application Clarify any questions	WM - J. A. Pike ()
4:15	Discussion on operator in charge*	WM - W. A. Wilson ()

4:30	Discuss Path Forward	WM and EPD W. D. Dunaway ()
5:00	End meeting	

* It is not clear if SRS can list several operators in charge and detail the scope of responsibility for each operator. The H-S Inter-Area Transfer Line is within the scope of the Tank Farm Wastewater Permit Application but is a DWPF facility rather than a Tank Farm facility. This conflict of ownership can to be resolved if SCDHEC allows specific scopes of responsibilities to listed for each operator.

CC: G. T. Wright, 703-H
T. M. Osborne, 703-H
S. S. Cathey, 703-H
R. C. Miller, 241-120H
P. H. Stevens, 707-H
J. J. Sherpenberg, 707-H
H. A. Abodishish, 707-H
L. H. Aiken, 707-H
R. G. Garvin, 703-H
B. L. Lewis, 703-H
M. A. Ceravolo, 703-H
B. A. Phillips, 241-102H
W. B. Van Pelt, 241-121H
T. P. Gaughan, 241-120H
K. S. Wierzbicki, 703-H
C. B. Stevens, 703-H
S. E. Crook, 703-H
J. V. Odum, 742-A
J. H. Travis, III, MDC-112
V. B. Wheeler, 703-H
WMT Files, 703-H
File Code: 175.15

INTER-OFFICE MEMORANDUM
Savannah River Site

Date: 17-Jan-1991 01:42pm EST
From: W. DANNY DUNAWAY
DUNAWAY-WD-07436
Dept: ENVIRONMENTAL PROTECTION
Tel No: 5-5754

TO: See Below

Subject: HIGH LEVEL TANK FARM WASTEWATER PERMIT APPLICATION

Please plan to attend a meeting on Monday, January 21 at 3:30 pm in the Building 742-A Conference Room to discuss the wastewater construction permit application package for the High Level Tank Farm.

The tentative agenda is as follows:

- Schedule for permit submittal, including tank assessments
- Strategy for requesting DHEC to permit ITF separate
- FFA and RCRA permit; Any conflicts?
- Logistics for DHEC tour, e.g.
  - What to discuss
  - What to show
  - Who is going to make the presentations
  - When are we going to request the State to visit
  - How long is it going to take
  - Special requirements (mask fitting, fast scan, etc)

Please let me know (X5-5754) if there are any questions.

Distribution:

TO:	Jeff Pike	(PIKE-JA-Y5547 @A1@SASEP1)
TO:	TIMOTHY P. GAUGHAN	(GAUGHAN-TP-08815 @A1@SASEP1)
TO:	CARY B. STEVENS	(STEVENS-CB-05981 @A1@SASEP1)
TO:	PAUL D. D'ENTREMONT	(D'ENTREMONT-PD-05438 @A1@SASEP1)
TO:	Brenda L. Lewis	(LEWIS-BL-06503 @A1@SASEP1)
TO:	MONTE HAWKINS	(HAWKINS-M-06779)
TO:	J. V. ODUM	(ODUM-JV-04184)
TO:	JIM JACKSON	(PAPER MAIL)
CC:	Jack Roberts	(ROBERTS-JS-05782)
CC:	G. T. WRIGHT	(WRIGHT-GT-T6181)
CC:	SUSAN S. CATHEY	(CATHEY-SS-04949 @A1@SASEP1)
CC:	Robert W. Wilson	(WILSON-RW-T4847 @A1@SASEP1)
CC:	L.C. Thomas	(THOMAS-LC-05194 @A1@SLSEP1)
CC:	R.G. Garvin	(GARVIN-RG-02746 @A1@SASEP1)
CC:	Kim S. Wierzbicki	(WIERZBICKI-KS-06535 @A1@SASEP1)
CC:	Kester Uzochukwu	(UZOCHUKWU-K-L1224 @A1@SASEP1)
CC:	Joseph J. Scherpenberg	(SCHERPENBERG-JJ-Y4460 @A1@SASEP1)
CC:	STEVEN E. CROOK	(CROOK-SE-07646 @A1@SASEP1)
CC:	Michael D. Dukes	(DUKES-MD-04831)

OSR 3-4A-W (Rev1-89)

WESTINGHOUSE SAVANNAH RIVER COMPANY

INTER-OFFICE MEMORANDUM

January 14, 1991

To: L. C. Thomas, 703-F
R. W. Wilson, 703-H
M. A. Ceravolo, 703-H
M. J. Mahoney, 703-H

Jeff Pike

From: J. A. Pike, 703-H, 7-8843

Draft Tank Assessment Report for F and H Tank Farm Facilities

Attached is the first draft (revision B) of the Assessment Report Phase II for the F and H Area High-Level Radioactive Waste Tank Farms(U). This report will be sent to SCDHEC as an addition to Appendix C to the Tank Farm Wastewater Permit Application which will compliment the Phase I report covering the ITP process. Please review or appoint a delegate to review and return comments to J. A. Pike (703-H, 7-8843) by Thursday, March 28, 1991. A timely review of the Assessment Report is needed to help keep C. T. Main on schedule and meet our commitment in the Federal Facilities Agreement.

Please review of the report for technical accuracy. If significant problems are discovered we need to know now so they can be incorporated into the assessment.

Thank you for you help.

CC (without attachments):

G. T. Wright, 703-H
S. S. Cathey, 703-H
R. G. Garvin, 703-H
B. L. Lewis, 703-H
W. B. Van Pelt, 241-121H
N. R. Davis, 241-120H
P. D. d'Entremont, 703-H
C. B. Stevens, 703-H
J. J. Scherpenberg, 707-H
H. A. Abodishish, 707-H
L. H. Aiken, 707-H
S. E. Crook, 703-H
W. D. Dunaway, 703-18A
V. Wheeler, 703-H
WMT Files, 703-H
File Code: 175.15

HI

cc: JVO
MA

First I've heard from these folks since ~Thanksgiving

WSOD 1/10

INTER-OFFICE MEMORANDUM
Savannah River Site

Date: 04-Jan-1991 11:29am EST
From: Jeff Pike
PIKE-JA-Y5547 AT A1 AT SASEP1
Dept: WMT
Tel No: x7-8843

TO: See Below

Subject: RE: Waste Water Permit

The Tank Farm Wastewater Permit Application will be submitted to SCDHEC with a secondary Tank Assessment Report as required by the Federal Facilities Agreement (FFA). In order to support ITP startup, we plan to submit the permit application with a Tank Assessment Report addressing just the ITP process and request a permit for the ITP facilities first. The rest of the Tank Farm Tank Assessment Report will be submitted about 8 to 10 weeks later.

Comments on the fourth revision of the Wastewater Permit Application were transmitted to C. T. Main December 7, 1990. C. T. Main estimates the completion date for the permit application as January 25, 1991. Submittal to SCDHEC should occur within a week thereafter. This date is about 4 weeks later than planned to support ITP startup. However, we will still be 2 months earlier than the March 31, 1991, deadline agreed to in the FFA.

C. T. Main will deliver the Tank Assessment Report for the ITP process by the time the permit application completed January 25, 1991. Comments on the draft ITP Tank Assessment Report were transmitted to C. T. Main on December 19, 1990.
The Tank Assessment Report for the entire tank farm is scheduled for completion by February 18, 1991. The first draft of this document will be completed within the next few days.

WM with the assistance and approval of EPD and DOE will invite SCDHEC to visit the tank farms about 1 to 2 weeks prior to submission date, much the same way DWPF invited SCDHEC prior to submission. Currently, the schedule shows that SCDHEC will be invited to visit the week of January 21, 1991. WM will introduce the SCDHEC personnel to the tank farms and the content of the wastewater permit application. SCDHEC indicated that the tour of DWPF facilities prior to reviewing the permit application was extremely helpful to them during their review.

Distribution:

TO:	G. T. WRIGHT	(WRIGHT-GT-T6181 AT A1 AT SLSRP1)
CC:	W. DANNY DUNAWAY	(DUNAWAY-WD-O7436 @A1@SLSRP)
CC:	TIMOTHY P. GAUGHAN	(GAUGHAN-TP-O8815 AT A1 AT SASEP1)
CC:	Bill Van Pelt, Ext. 7-1657	(VANPELT-WB-O7016 AT A1 AT SASEP1)
CC:	Jeff Pike	(PIKE-JA-Y5547 AT A1 AT SASEP1)
CC:	Brenda L. Lewis	(LEWIS-BL-O6503 @A1@SASEP1)
C:	R.G. Garvin	(GARVIN-RG-O2746 @A1@SASEP1)

F-108

Westinghouse
Savannah River Company

P.O. Box 616
Aiken, SC 29802

NPD-WMT-901119

December 7, 1990

J. F. Stein
Chas. T. Main, Inc.
4701 Hedgemore Dr.
Charlotte, NC 28209

Mr. Stein:

EWR 863190 - F & H AREA TANK FARM PERMITTING COMMENTS TO REVISION D

Attached are comments about the Tank Farm Wastewater Permit Application revision D.

Several typos throughout the document need to be corrected. Most comments require relatively small amount of effort to correct. Several of the data tables need to be filled in. Some of the information is included with the comments, but we still need some information that will require searching our files.

If there are any questions, please call me at (803)-557-8843.

Sincerely,

Jeff Pike

Jeff Pike
Engineer, Waste Management Technology

Retention Basins

- Mentioned on pg. 3 as possible influent if contamination is so great that F/H ETF can't treat

CC: G. T. Wright, 703-H (without attachment)
S. S. Cathey, 703-H (without attachment)
R. W. Wilson, 703-H (without attachment)
L. C. Thomas, 703-F
N. R. Davis, 241-120H (without attachment)
D. C. Blair, 241-28H (without attachment)
T. E. Pate, 703-H
K. Uzochukwu, 703-H
R. G. Garvin, 703-H (without attachment)
B. L. Lewis, 703-H
P. D. d'Entremont, 703-H
W. B. Van Pelt, 241-121H
T. P. Gaughan, 241-120H
M. A. Ceravolo, 242-24H
D. F. Brown, 703-H
C. B. Stevens, 703-H (without attachment)
J. J. Scherpenberg, 707-H (without attachment)
M. J. Mahoney, 703-H (without attachment)
S. Crook, 703-H
J. W. Nelson, TC-S2
W. D. Dunaway, 703-A
R. E. Walker, BTC-B14-054, N. Augusta, (without attachment)
V. Wheeler, 703-H
WMT Files, 703-H
File Code: 175.15

Page, Paragraph, and Line	Comment	Response
	From Doug Brown:	
p. 3	Why is ETF process sewer connection to HDB-8 not listed? ie line 149 on Figure 4-22 and line to nozzle 6 on Fig 4-41	Connection will be added to the list.
Fig. 4-21 and Fig. 4-22	Evaporator designations of 1F/2F/1H/2H are inconsistent with designations F/16F/H/16H which is used elsewhere in the application.	Evaporators will be named consistently as F/16F/H/16H. Change designations on Fig. 4-21 and 4-22.
p. 5	Description of Decontaminated Salt Solution is wrong.	The description will be corrected by replacing the word "process" with "ITP" and deleting the words "which contains radionuclides ... by the F/H ETF".
p. 6	Redisposition the 5 waste streams by stating that the streams go to specific permited facilities and give permit #.	The waste streams will be redispositioned as follows: Evaporator overheads (to ETF, SCDHEC Permit #) RBOF/RRF treated waste (included with Evaporator overheads) Washed percipitate slurry (to DWPF, SCDHEC construction permit 16783) Washed sludge slurry (to DWPF, SCDHEC construction permit 16783) Decontaminated salt solution (to Tank 50, SCDHEC permit #)
p. 10, 1st par., 5th line	Insert "build/operate" between "...for permission to ___ a facility ..."	Words will be added
p. 10, 1st par., last line	Verify if "Permit #1WP-217" is correct? (It may be #IWP-217 - I not 1)	Correction will be made
p. 12	"for of the Replacement Evaporator System" should be	Correction will be made

Page, Paragraph, and Line	Comment	Response
	deleted.	
p. 13	Include the name and title of the Autherized Representative.	Edward W. Pottmeyer, Jr., Vice-President and General Manager, Nuclear Materials Processing Division.
Fig. 3-1, p. 33	Why should "reuse/disposal" be specified for the Reclaimed Hg stream?	Simply claiming Hg is reclaimed is consistent with the DWPF permit application and we will use this approach. P. 33, 1st par., 10th line, replace "removed" with "reclaimed" and delete "for reuse or disposal". Figure 1-3, delete "reuse/disposal" and move reclaimed Hg into the box.
p. 31	Describe Hg as a product as shown in Fig. 3-1.	?
p. 35, 1st par., 2nd line	Change "four" to "five", and "(a fifth ..." to "(the fifth ...".	Corrections will be made.
p. 38, 2nd par.	Add discussion of Hg as a product ~~to~~ of waste evaporation.	Addition will be made as follows: ?
p. 8, 2nd par., 7th line	Replace "identical" with "equivalent".	Langauge used is consistent with the FFA. In order to keep the consistency in the permit application, change the first berger dot to the same language used on page 8.
p. 42, 2nd par., 1st line	Delete "the operators make" and add to the end of sentence "are made".	Correction will be made.
p. 141, last par., first line	Delete "the operators make" and add "are made" between "path" and "and". Delete "initiates" and add "is initiated to the end of the sentence.	Corrections will be made.
p. 44, 3rd line from	Change "are" to "is".	Correction will be made.

Page, Paragraph, and Line	Comment	Response
bottom		
p. 55, 1st par., 7th line	Replace "are within the F/H ETF waste acceptance limits" to "have a suitable composition".	Correction will be made.
p. 222, 1st par., 6th line	Delete "F/H ETF".	Correction will be made.
p. 60, 2nd par.	Move "to ensure that sufficient ... the salt cake" to "... filled with salt cake ___." and delete "and" after "... salt cake moist".	Corrections will be made.
p. 69, Figure 4-9	Label inlet and outlet nozzles. Define where the "outlet dip tube" points to.	Corrections will be made.
p. 58, 2nd par. p. 70-73	The agitator in the CTS pump tank does not show up in Fig. 4-4 or in the discussion on p. 70-73. Does it exist? Need to reword to include agitator in description.	Need wording changes. See Ceravolo's comments for agitators and pumps.
Fig 4-15, Fig 4-13	The figures conflict. Is there one or two return lines from the cross flow filters?	Correct Fig. 4-15 to correspond with Fig. 4-13.
p. 94, 2nd par., last line	Is the 3 inch line truly a dedicated line? presumably there are other routes from the hold tanks that can recycle the contents of the hold tanks if they not within acceptable limits for Tank 50.	Delete "dedicated". Other use of the word throughout the permit application will be check for proper use.
p. 103, 3rd par., 1st line	Change "is evaluate" to "is to evaluate".	Correction will be made.

Page, Paragraph, and Line	Comment	Response
p. 104, 3rd par., 7th and 8th line	Change "... per minute decontaminated ..." and "... per minute wash ..." to "... per minute to the decontaminated ..." and "... per minute to the wash ...".	Correction will be made.
p. 107, 4th par., 2nd line	Uncapitalize "IS".	See Gaughan's comments for p. 107.
p. 108	Confirm 440 scfm on 30" column and 220 scfm on 16" column. Why is the velocity 75% higher on the small column?	Information to be supplied by WMT. No change to the permit application expected.
p. 94	How long will the hold tank sample analysis take? At 115 gpm, it will take 104 minutes to fill one tank, while it takes 60 minutes to empty the other tank at 200 gpm. Thus leaving 44 minutes to take the sample and analyze it. This appears to be to short of time.	WMT to supply more information and provide any changes at a later date.
p. 109	Have other resins (eg. reactors, etc and other "stuff") besides the CRC resin, been added to the waste tanks over the years?	Add line about other wastes as follows: ? Call Back on this ITEM
Fig. 4-16	Label on "RBOF RFF" stream needs a "/".	Correction will be made.
p. 128	This is the first time in the permit that ETF effluent to the tank farm has been called "waste concentrate" (which is the term SRS has used previously w/ SCDHEC) as opposed to "concentrated reject" used else where.	Change the use of "concentrated reject" to "waste concentrate" throughout the permit application. List all locations.
p. 129, 2nd par., line 5	Change "form" to from".	Corrections will be made.

talk to Paul

Page, Paragraph, and Line	Comment	Response
p. 129, 4th par., line 8	Change "is to be" to "is being".	Corrections will be made.
p. 158, 1st par.	Where the F and H catch tanks drain to is incorrect. I think the F catch tank goes to tank 7 or ETF retention basin. The H catch tank goes to a waste tank or ETF process sewer.	See answer to Ceravolo's comments on p. 158.
p. 164, 1st par.	Should include flex jumpers in addition to current discussion of rigid pipe jumpers.	? – find note on FLEX JUMPERS ✓
p. 167, entree on HDB-8	Delete "and Z Area SMDF". Add to the functions mentioned "to accept wastewater which is too radioactive for the F/H ETF to treat, and to accept ETF waste concentrate which is too radioactive for treatment in the Z-Area SMDF."	Corrections will be made.
Fig. 4-41	Current use of Nozzle 6 is listed as "WWCSF". What is WWCSF? This nozzle returns the ETF influent that is too radioactive for the ETF to treat.	Correction will be made.
p. 182, 1st par., 10th line and 2nd par., 10th line	In both cases, change "Tank Farm operators open or close specific valves ..." to "Specifc valves are opened or closed ...".	Corrections will be made.
p. 184, 3rd par. last line	"... meet or exceed ..." implies we can replace a small pump with a large pump and will not modify our permit for this increase in capacity. Replace with " ... be equivalent ...".	Correction will be made.
p. 186	4th berger dot, "Washed slurry sludge from F Area ..."	Correction will be made.

Page, Paragraph, and Line	Comment	Response
	implies sludge washing occures in F Area. Delete "Washed slurry".	
p. 188	What is gallon capacity of FPT-3? What is a "Dead pump"? What is stored in HPP-1?	7000 gal., ?, spare parts.
p. 185, 4th par.	Mention that many of the pump pits are associated with diversion boxes and show relationship in Fig. 4-28 through 4-41.	?
p. 191, 1st par., 2nd line	Replace "replace" with "replaced".	Correction will be made.
Fig. 4-46	Confirm that the LPPP HEPA filter is on the blower discharge and not the suction. This seems very abnormal.	?
p. 196, 1st par, 7th line	Change "LPPP3" to LPPP2".	Correction will be made.
p. 197 and 198	Do the diesels meet the stringent "emergency" standards or the looser "stand-by" standards"? Be sure to use the correct word (or neither).	The Tank Farm back-up power system is classified as "stand-by". Change all references to stand-by rather than emergency.
p. 211 and 215	Are the tables left incomplete on purpose?	No, data will be filled in as follows: ? I will provide more
p. 213, 1st par., 2nd line	Change "RBOF/RFF" to "reactor filter backwash".	Correction will be made.
p. 215, note c	What is NaHO2?	Change to NaNO2.
p. 217, 2nd par., 3rd line	Absolutely can not say "and/or process chemical concentration" because SCDHEC specifically	Delete "and/or process chemical concentration".

INFO

Page, Paragraph, and Line	Comment	Response
	disallowed this without their explicit permission at the time.	
p. 217, 2nd par., 6th line	Replace "incidents" with "instances".	Correction will be made.
p. 217	Need discussion of contaminated basin water (see comment on Fig 4-41).	?
p. 218, 2nd par., 11th line	Characterization of flush water should be given, it is not "dilute waste".	Appearently "spent flush water" is what is ment here. Make the correction.
p. 224, 1st par., 4th line	Does the RBOF/RRF waste have a pH of 8-10 as reference to Table 5-11 means?	Replace the sentence "The typical characteristics ..." with "Because the RBOF/RRF waste is combined with evaporator overheads for processing through the CRC, the treated waste has the same characteristics as provided in Table 5-11." See also response to Ceravolo's comments on p. 223-224.
p. 228, 2nd par., 5th line	Change "inhibited corrosion" to "inhibit corrosion".	Correction will be made.
p. 228, 3rd par.	Disscussion details "washed sludge slurry being prepared in F & H Area Tank Farms" yet section 4.6 only described use of Tanks 40, 42, and 51, all of which are in H-Area.	Change first sentence to "Macro-batches (...) of F and H Area sludge will be prepared in the H-Area Tank Farm to provide the sludge slurry feed for the DWPF Vitrification Facility."
p. 221	Title is out of alignment.	Correction will be made.
p. 227	Can the DSS really have 8wt% Insoluble solids?	? — I will need to provide
p. 234-239, 287, 359-63	Several blanks in the tables need to be filled in.	?

Page, Paragraph, and Line	Comment	Response
p. 264, 265	3 degrees F design temperature seems a bit low.	?
p. 266, top line	ASTM reference should be AWS?	?
p. 268	A 0.062" shell is to thin. Obviously incorrect.	See Gaughan's comments on p. 268. Recheck.
p. 291, 3rd par., 14th line	Change "form" to "from".	Correction will be made.
p. 291, 3rd par., 16th line	Should "exhaust fan" be "supply fan" instead?	?
Table 7-36 through 7-50	Material of Construction for pan = A285-50T not -5OT or -SOT.	?
p. 331	"boiling point of" is out of place.	Retab.
p. 332. last line continued on 333	Type of steel and normalization method for tanks 38-51 do not agree with the tables.	?
p. 333, 5th par., 4th line	Change "affix" to "affixed".	Correction will be made.
p. 352, 3rd par., 6th line	Change "thremowell" to "thermowell".	Correction will be made.
p. 366, 1st par.	This paragraph seems irrelevent in a "pump" section.	?
p. 368, 2nd par., 4th line	Change "venture" to "venturi".	Correction will be made.
p. 373	For "Discharge Diameter" under "Low Shear", only one number exists when there should be two. In addition, the note "b" seems to be inappropriately positioned. Please	?

Page, Paragraph, and Line	Comment	Response
	clarify. From W. B. Van Pelt:	
p. 8	Can equipment be changed to a type different than that described in the permit as long as the effluent flows described in the permit are not exceeded?	Discussed in a phone conversation. Mr. Van Pelt is concerned that we might proceed with maintenance that would change a system and violate the permit. WM will need to develop a system that ensures maintenance and other work orders do not violate the permit.
p. 87, 2nd par., 6th line	Delete from "Fresh salt cake ..." to end of paragraph.	Correction will be made.
Fig. 4-12	Stream labeled "dilution and wash water from tank 22" should be labeled "dilution water from tank 22". Stream labeled "feed chemicals" should be labeled "feed chemicals and wash water".	Corrections will be made.
Fig. 4-14	The actual filter looks different from what is depicted in this figure. WMT will provide an alternative sketch which more accurately depicts the filter.	The sketch will be changed to the sketch provided.
p. 99 through 105	There have been several changes in the run-in program since this section was written. I don't understand the need for including this description since the cold run facilities will be used and dismanteled before hot start-up of ITP. I recommend deleting both sections. If you deem them necessary, they will need to be rewitten based on the latest plans from the ITP run-in team.	The permit will be submitted prior to completion of the run-in program. It is very likely that SCDHEC will visit the facility while the run-in program is in place. The facilities provided for the run-in would cause great concern with SCDHEC that we were trying to do something with out their knowledge if we neglect to document the facilities. The section was written in a way that should make it easy to cut what is unnecessary. Mr. Van Pelt will provide information for rewrite.

Page, Paragraph, and Line	Comment	Response
p. 106, 2nd par., 6th line	Change "... prevent potential ignition of the tank contents." to "... prevent ignition of potentially combustible solids."	Correction will be made.
p. 107, 4th par., 1st line	Replace "are" with "is". Delete "and alcohols ... sodium titanate."	Corrections will be made. See Gaughan's comments on p. 107.
cover letter	In your attached "committments from the Tank Farm Wastewater Permit Application" you state that the Ru-106 concentration in decontaminated salt solution is limited to 47 micro-Ci per pound of salt on a dry basis. Where is this in the application?	It's in the first paragraph on page 83. See also Pate's comments on p. 83.
	From T. P. Goughan:	
p. 94, 2nd par., 16th line	If possible, delete "(at an approximate flow rate of 200 gallons per minute)".	?
p. 95, 3rd par., 9th line	Replace "as high as" with "approximately".	Correction will be made.
p. 97, 2nd par., 19th line	If possible, delete "approximate rate of 200 gallons per minute".	?
p. 100, 2nd par., 13th line	Change "... were be repeated ..." to "were to be repeated ..."	Correction will be made.
p. 101, 3rd par., 3rd line	Change "... a 10,000 gallon ..." to "... a 10,000 (working capacity) gallon ...".	Correction will be made.

Page, Paragraph, and Line	Comment	Response
p. 105, 1st par., 1st line	Replace "with" with "will".	Correction will be made.
p. 107, 4th par., 1st line	Replace "are" with "is" and "IS" with "are".	Corrections will be made.
p. 267, 2nd par., 1st line	Replace "304L" with "316L".	Correction will be made.
p. 267	Change "Standard Thickness: 0.047 inches" to "Standard Thickness: 0.062 inches".	Correction will be made.
Table 7-32	Make the following corrections to the information in the table: Filter Shell Dimensions - 18" D x 10' L (tube length); Filter Shell Material of Construction - 316L Stainless Steel; Filter Tubes Thickness - 0.062 inches; Filter Tubes Material of Construction - 316L Stainless Steel; Performance Flow Capacity Filtrate out (maximum) - 115 GPM (50 GPM each filter); Performance Flow Capacity Precipitate Return - 100 GPM (185 GPM ? - Verify what the correct value should be); Performance Flow Capacity Filtrate out (maximum) - 33 GPM (What is this number?); Performance Differential Pressure Across Filter Tubes (maximum) - 60 PSI @ 50 GPM Filtrate	?
	From T. E. Pate:	
p. 2, 3rd par., 5th line	The Replacement Evaporator operational date is 1994, not Dec. 1993.	Correction will be made.
p. 3, 4th par., 2nd line	Add parenthesis around HPP5 and HPP6.	Correction will be made.

Page, Paragraph, and Line	Comment	Response
p. 11, 1st par.	The ETF also treats diverted storm sewer water which needs to be noted.	?
p. 13, 3rd par.	Has the inspection (F and H Area - May 1990) been done? Inspection report issued?	The inspection was completed in November with the report to be completed shortly. The report or summary of the report (probably only a few paragraphes for the permit application) will be included.
p. 14, 2nd par., 5th line	The topographical map referenced as figure 2-3, but is actually 2-2.	Correction will be made.
Fig. 2-2, 2-3, and 2-4	Prints in sleeves are titled "Figure 2-2, 2-2, and 2-3. They should be 2-2, 2-3, and 2-4.	Correction will be made.
p. 25, 1st par., 3rd line	Evaporator system 242-25H will not be complete until 1994. Footnote states it is currently under construction, whereas on page 2 it stated construction to begin in the middle of 1991.	Change both the page two reference and the page 25 footnote to indicate that the 242-25H Evaporator site is currently being cleared of existing facilities and that the Evaporator facilities will begin construction in mid 1991.
p. 29, 1st par., 1st line	DWPF is currently scheduled for an October 1992 startup, but is expected to slip depending on funding levels, etc. All project dates in this permit need to have a caveat of "expected, anticipated, forecasted, ..." as you have used here.	Startup any time after the stated dates are OK. SCDHEC would want to know about startups that occure earlier than stated or if delayed for an unusually long time.
p. 53, 1st par., 2nd line	Replacement is misspelled.	Correction will be made.
p. 75, 1st par., 3rd line	The replacement evaporator will startup in 1994.	The change will be made.
p. 77, 3rd par., 12th line	The way it reads, we do not calibrate the radiation	Reword to indicate that all radiation monitors are

Page, Paragraph, and Line	Comment	Response
	monitors for the other evaporators.	calibrated.
p. 83, 1st par., 7th line	Ru-106 is nominally 50 microcuries/# or less; however, with special operational considerations it can be raised by five times. IT IS NOT A LIMIT.	Need to remove designation of limits from discussion and/or delete paragraph.
p. 86, 2nd par., 3rd line	Avoid using terms such as minimum, never, limit, etc. "16 months is usually required ..."	Need to check document for all such uses.
p. 107, 4th par, 1st line	Correct verb tenses: "benzene which is evolved" and "alcohols which are added ...".	Corrections will be made. See Gaughan's comments on p. 107.
p. 113, 3rd par.	Delete the last sentence. The removal of the sludge is not conducted to maintain consistent composition between batches.	Correction will be made.
p. 116, 1st par., 1st line	The disposition of the spent wash water is also dependent on the salt concentration.	?
p. 116, 2nd par., 1st line	Last two sentences are identical to those in the previous paragraph and are reduntant.	Delete the last two sentences.
p. 122, 3rd line	Typo. Should read tanks 13-16 not 3-16.	Correction will be made.
p. 123, 2nd par., 1st line	Delete the word never.	Correction will be made.
p. 127	Tanks 35 and 36 are planned to exchange places in the future. Therefore, add "future HHW concentrate receipt tank" and "future HHW reciept tank" to 35 and 36 respectively.	Correction will be made.

Page, Paragraph, and Line	Comment	Response
p. 128	Tank 40 description should be consistent with tanks 42 and 51, i.e. add "extended".	The addition word "extended" applies to a project name. The permit application prefers to use the phrase "sludge processing" verses "extended sludge processing" because the later implies that there are two sludge processes. One process for initial processing and a second process for additional processing for certain wastes. Only one sludge process in one location exists. Delete the word "extended" when associated with sludge processing through out the permit application.
p. 128	In the Tank 49 description, precipitate is misspelled.	Correction will be made.
p. 141, 2nd par., 5th line	Figures 2-4, 2-5, and 2-6 should be 2-3, 2-4, and 2-5. See also comment # (6)	Corrections will be made.
p. 145, 4th par., 6th line	The most commonly used pipe should be 3-inch, not 2-inch based on Table 4-9.	Correction will be made.
p. 196, 1st par., 7th line	The DWPF recycle will flow through LPPP2 not LPPP3.	Correction will be made.
p. 235, 1st line	Need to supply the year the 242-F overheads condenser was installed.	See response to Ceravolo's comments on p. 235.
p. 238, 1st line	Need to supply the year the 242-F CRC was installed.	See response to Ceravolo's comments on p. 238.
p. 240, 3rd and 4th par.,	Either add the data or delete references to the CTS Pump Tank containment Tank shell and heating/cooling coil.	See response to Ceravolo's comments on p. 240.

Page, Paragraph, and Line	Comment	Response
p. 241, 3rd and 4th par.	Lacking information for heater tube bundles and de-entrainer for the 242-H evaporator.	See response to Ceravolo's comments on p. 241.
p. 245, 1st line	Need to supply the year the 242-H CRC was installed.	See response to Ceravolo's comments on p. 245.
p. 247, 3rd par.	Either add data or delete references to the CTS Pump Tank containment Tank shell (partial) and heating/cooling coil.	See response to Ceravolo's comments on p. 247.
p. 260, 3rd through 5th par.	Either add data or delete references to the heater tube bundle, de-entrainer, and demister for the spare evaporator pot.	See response to Ceravolo's comments on p. 260.
p. 274-285	All of the type I tanks are missing values for cooling coil heat transfer capacity, annulus ventilation rate, and info on pump installations.	?
p. 297-299	All of the type II tanks are missing values for cooling coil heat transfer capacity, annulus ventilation rate, and info on pump installations.	?
p. 304-326	All of the type III tanks except ESP (40, 42, and 51) and ITP (48, 49, and 50) tanks are missing values for info on pump installations.	?
p. 331, 5th par.	The boiling point of aqueous phase is the maximum temperature for saltcake.	Correct positioning of "boiling point of".
p. 340-347	All of the type IV tanks are missing values for info on pump installations.	?

Page, Paragraph, and Line	Comment	Response
p. 359, 1st and 2nd par.	1F evaporator CRC pump and hold tank transfer pump need data filled in.	?
p. 360, 1st and 2nd par.	1H evaporator CRC pump and hold tank transfer pump need data filled in.	?
p. 361, 1st and 2nd par.	2F evaporator CRC pump and hold tank transfer pump need data filled in.	?
p. 362, 1st and 2nd par.	2H evaporator CRC pump and hold tank transfer pump need data filled in.	?
p. 362-3	25H evaporator CRC pump and hold tank transfer pump need data filled in.	?
p. 367	H/S IAL pump pit pump specifications?	?
	From M. A. Ceravolo:	
p. xvii	HEPA - add "(filter)" to the end of the line.	Correction will be made.
p. 25, note c	Change "used for the sludge processing." to "used for sludge processing."	Correction will be made.
p. 25, note d	Change "242-3H" to "242-18H".	Correction will be made.
Fig. 3-1	Change "effulent" to "effluent" on process stream from ETF to outfall.	Correction will be made.

Page, Paragraph, and Line	Comment	Response
Fig. 3-1	Should the RBOF/RRF waste stream appear as an additional stream processed directly through the CRC or is it adequate to say the CRC is part of the evaporator system?	The current description of RBOF/RRF waste is adequate for the level of detail in Fig. 3-1. Fig. 4-1 expands the details in the tank farm and addresses the waste stream's treatment.
p. 35, 3rd par., 10th line	Change "or concrete/steel " to "concrete, steel, or any combination of the four materials".	The correction will be made.
Fig. 4-1	Make sure that RBOF/RRF will definetely not use chromium containing solutions anymore. Otherwise, seems you should still specify the Cr content as one way to determine routing. Will we be held to the seperation of RBOF/RRF by radioactivity levels? We often add <10^5 material to tank 21 if 23 is full. SRL Laboratory waste also goes to Tank 47. What about plans to truck DWPF cold runs recycle by truck to a tank in F-Area until the H-S IAL is operating? Any permit effects? We will do this until 6/92.	Mike Lewczyk, engineer at RBOF, reconfirmed that a commitment was made not use chromium-containing cleaning solutions due to environmental concerns (Dec. 2, 1990). In addition, chromium is still present in the characterization of the waste stream which should cover RBOF's use of chromium if they decide to use it again. The following corrections will be made: Delete activity data labels on process streams in Fig. 4-1.
p. 47, 3rd par.	Make sure that RBOF will not use chromium. Last I heard, they were writing a TA to use a chromium-free cleaning solution (DW-500), but what happens if the TA expires or the stuff does not work? The waste in Tank 23 can also be evaporated if needed.	Mike Lewczyk, engineer at RBOF, reconfirmed that a commitment was made not use chromium-containing cleaning solutions due to environmental concerns (Dec. 2, 1990). In addition, chromium is still present in the characterization of the waste stream which should cover RBOF's use of chromium if they decide to use it again. Replace paragraph to read as follows: The LHW generated by the RBOF/RRF contains a lower concentration of radionuclides and dissolved solids (less than 2%). The disposition of this waste depends primarily upon the radioactivity level of the waste.

Page, Paragraph, and Line	Comment	Response
		Generally, waste with radioactivity levels greater than 100,000 d/m/ml Cs-137 is routed to Tank 21 for evaporation or use as process water. Otherwise, the waste is routed to Tank 23 for proccessing through the cesium removal column prior to transfering to the F/H ETF. Sometimes, waste routed to Tank 23 is evaporated if needed.
Fig. 4-2	242-H Gamma monitor before CRC is after pump tank and pump monitor. The 242-H does not a CRC bypass.	Note will be added to drawing. Sketch 138-8-H-340F shows a bypass. Leave as is.
Fig 4-3	Change "DWPF RECYCLE OTHER WASTE STREAMS" to "DWPF RECYCLE AND OTHER WASTE STREAMS".	Correction will be made.
p. 52, 3rd par.	This paragraph is deceiving. The mist eliminator is a type of de-entrainer.	Change the paragraph to read as follows: The vapor generated by the evaporator process is passed through a de-entrainer consisting of three bubble cap trays and a fine wire mesh above the bubble cap trays (the 242-H evaporator currently does not have the wire mesh). The de-entrainer is used to limit the amount of water droplets (which may contain dissolved radionuclide salts) entrained with the vapor phase. The de-entrainer allows the de-entrained water to drip back into the evaporator pot. With improvements to the design of the wire mesh, the replacement evaporator (242-25H) and all future evaporator pots (i.e. replacements within the existing evaporator systems), will not contain bubble cap trays. The elimination of the bubble cap trays does not effect the overall performance of the evaporator.

Page, Paragraph, and Line	Comment	Response
p. 53, 3rd par.	Is it O.K. to operate without using the gama monitors? Need to be able to. 242-25H will not have a pump tank. See Fig 4-2. The overheads always go to the pump tank. From there, they are pumped straight to the hold tank for sampling and release (Cs-137 is O.K.) or go to the CRC before going to the hold tank (if the Cs-137 is high).	The way the permit is currently written, it says we have gama monitors and we use them. Replace the paragraph as follows: Following mercury removal, the condensed overheads flow to the CRC pump tank where they are directed to the CRC or to the Overhead Hold Tanks (CRC is optional and used only as needed). The overheads pass by a gamma monitor to measure the approximate radioactivity level. If the gamma monitor indicates that the radioactivity is to high, then the operator can recycle the overheads back to the evaporator feed tank. However, the gama monitors have not functioned reliably and may be removed from service.
p. 54, 2nd par., 19th line	"... initial radionuclide removal and/or back-up purposes." is not clear.	Replace with "processing RBOF/RRF waste."
p. 55, 3rd par., last line	Evaporator is allowed to reach 150 degrees C (alarm interlock point). Will be higher for 242-25H.	Change temperature to 150 degrees C. Make note of the 242-25H evaporator temperature where you discuss the 242-25H.
p. 56, 1st par., 3rd line	Delete "manually". Normally automatic but can be either.	Correction will be made.
p. 56, 1st par., 6th line	Change "automatically" to "manually".	Correction will be made.
p. 56, 1st par.	The control scheme for 242-25H will be different than for the existing evaporators. Any problem with this?	Describe that control system on the replacement evaporator system will replace many of the manual controls on the old evaporators with automatic system.
Fig. 4-4	Change "(242-3F & 242-3H)" to "(242-3F & 242-18H)".	Correction will be made.

Page, Paragraph, and Line	Comment	Response
Fig. 4-6	Add arrow from flange on lower left end of condenser labeled as "Vent".	Correction will be made.
Fig. 4-8	Check if there is a vent on these tanks.	?
p. 68, 1st par.	Check if the evaporator CRC pump is vairable speed and keeps the level in the pump tank constant or is fixed speed and cycles the level in the pump tank between a high and low point.	The 242-F, 242-16F, 242-16H evaporators have constant speed pumps. 242-H has variable speed pump. However, the level in the pump tank is kept constant by manual adjustment of a valve between the pump tank and pump. The 242-H evaporator pump tank cycles between a high point and low point in the pump tank because there is no automatic control to adjust the speed of the vairable speed pump. A control scheme is currently being developed and will be used in the future. Generally, the 242-H evaporator runs with the pump tank about 25-30% full because the pump runs at a speed that closely matches the rate of overheads production.
Fig. 4-9	Several details need clarification. Delete "WHITE ASBESTOS". Add "UPPER" to the current label "SCREEN". Label "LOWER SCREEN", "FLUSH SPRAY (TYPICAL)", and "THERMOWELL". Delete label "HEAT SINK RING". Add inlet and label. Clarify outlet dip tube (where does it go?).	Corrections will be made.
p. 70, 3rd par., 4th line	Change "242-3H" to "242-18H".	Correction will be made.
Fig. 4-10	Why show agitator? Pumps or agitators are not shown on other tanks (e. g., CTS Tank). What is the stub on	The permit should show equipment consistent with description. The agitators and at least pump mounting

Page, Paragraph, and Line	Comment	Response
	lower left?	locations should be shown. ?
Fig. 4-11	There several nozzles on top of these tanks - need to clarify. The agitator access hole is shown, but not the 2 pump holes. Why? Draw arrow from label "SPRAY RING" to the spray ring. Remove labels "TOP COIL SUPPORTS" and "BOTTOM COIL SUPPORTS". Add labels "COILS" and "BOTTOM ANNULUS NOZZLE" to the respective devices.	Show a second view of the whole tank to illistrate the nozzles and pump access. Other corrections will be made.
p. 73	Are you sure that the feed system does not need to be described somewhere? In particular, the feed pump should be mentioned, right? (capacity, etc.) What about the feedline and the ventline?	The specifications for the feed pump are in the specification sections. Previous drafts had much of this information described in this section, but determined that there was too much duplication of information. The general description of the evaporator process describes that there is a feed pump and the tank farm process drawings show the feed line. However, the vent line is not considered a process line. The Tank Assessment Document that will be submitted with the permit application may include a brief descripition of the vent line for secondary containment assessment purposes.
p. 73, 3rd par., 10th line	Change "amounts of contaminants" to "amounts of radioactive contaminants".	Correction will be made.
p. 74, 3rd par., 8th line	You mention that the 242-H evaporator will continue to be maintained serval times in the permit application, but it will be impossible to run both. The CTS loop will have to be cut and abandoned in order to tie in the new evaporator GDL's. Besides, I think the NESHAP	The decision to remove the 242-H evaporator from service was not definate when we decided to write the application. Since then, it has become clear that the evaporator will be removed from service and there will be no chance that both will operate at the same time. All

Page, Paragraph, and Line	Comment	Response
	application for stack emmissions specifiy the 242-H shutdown.	similar statements will be corrected to reflect that the 242-H evaporator will be removed from service prior to the start-up of the replacement evaporator.
p. 75, third dot	Add "and pump tank".	Correction will be made.
p. 75, 2nd par.	Also, there is no longer a steam lift ventline back to a waste tank. The evaporator lift will vent back to the evaporator pot itself.	Reword as appropriate.
p. 76, 1st par., 7th line	Change "3000" to "8000".	Correction will be made.
p. 77, 3rd par., 1st line	On the 242-H, the 1st monitor is after the CRC pump tank and pump.	?
p. 78, 2nd title	Change "Hold Tanks" to "Overheads Hold Tanks".	Correction will be made.
p. 79, 2nd par., 6th line	Where? to flush the lines?	?
p. 79, 3rd par.	Should the containment building be mentioned here?	The containment building should be mentioned in the Tank Assessment Report since the building is important to the secondary containment system.
p. 85, note a	Change "... and 300,000 gallons ..." to "... and upto 300,000 gallons ..."	Correction will be made.
Fig. 4-16	Label on "RBOF RFF" stream needs a "/".	Correction will be made.
p. 125, Tank 16, current use	Change "... supernate removed ..." to "... supernate and sludge removed ..."	Correction will be made.

Page, Paragraph, and Line	Comment	Response
p. 127, tank 24, current use	The RBOF waste is the tank contents. Ballast is to prevent bouyant [counter act] forces due to perched water around the tanks (in the sidewall).	Delete "to ballast the weight of the tank contents". Add the following sentence: This tank contains a volume of water as balast.
Fig. 4-19	Do not specify flows - not the same for all tanks. The exhaust system is attached to a separate riser on the opposite side of the tank. Clarify that the distributed coils are used in IIIA's, insertable bundle coolers are used in the III's.	Corrections will be made.
p. 145, 5th par., 3rd line	Replace "transit" with "transite".	Correction will be made as follows: replace "transit duct" with "transite pipe".
p.146, 2nd par., last line	Appendix C does not exist. Will we get to review?	Appendix C will contain the Tank Assessment Report as required by the FFA. A limited review for accuracy will occure within the next couple of weeks.
p. 158, 1st par., 5th line	Change "... and transferred ..." to "... and is transferred ..."	Correction will be made. In addition, change "(Tank 7)" to "(currently Tank 7)".
p. 158, 1st par.	Catch tank in H-Area can also go to a waste tank if a jumper is added to HDB-1.	The following change will be made: add sentence "A jumper will be added to HDB-1 to provide a route from the H-Area catch tank to a waste tank."
p. 163, 5th par., 1st line	Change "gasket" to "gasketed".	Correction will be made.
p. 164	The gaskets are not always made of rubber (asbestos, metal, etc). Some newer connections (valve boxes, maybe ITP) don't use hanford connectors.	Corrections will be made.

Page, Paragraph, and Line	Comment	Response
p. 164, 1st par.	2nd line: Change "gasket" to "gasketed". 4th and 6th line: Delete "rubber".	Corrections will be made.
p. 164, 2nd par.	9th line: Change "rubber seal" to "gasket". 11th line: Change "... diversion or ..." to "... diversion box or ..." 15th line: Change "is located" to "is then located". Last line: Appendix C does not exist.	Corrections will be made.
Fig. 4-27	Change label "Hanford Connection" to "Hanford Connector". Add label for "Nozzle".	Corrections will be made.
p. 167	FDB1: Change purpose to "Inactive. Was previously used to distribute waste from the F-Area Seperations Facility. HDB1: Change purpose to "Inactive. Was previously used to distribute waste from the H-Area Seperations Facility. May be used in the future for waste removal activities from tanks 9 and 10.	Corrections will be made.
p. 182, 1st par.	Will a permit change be needed if other valve boxes are added?	Unless we include all planned valve boxes now, we will need to get permit modifications for these additions. The addition of a valve box usually means that new transfer lines will be installed which would need a permit modification anyway.
p. 182, 3rd par.	Where did this information come from? This will not be done. Only tank 35 will have a GDL valve box, since we can't get the GDL to the existing backflush valve riser and we will be going straight into the tank without a riser to install the back flush valve in.	Delete paragraph.

Page, Paragraph, and Line	Comment	Response
p. 184, 2nd par.	Also have sump jets and pumps in the DB's and PP's.	The sump jets and pump are part of the secondary containment system that will be described in the Tank Assessment Report.
p. 184, 3rd par.	Meant to be all-inclusive or just examples. Clarify. (It's not complete, of course.)	The description should be complete. I am unaware of any other pumps that would be included within the scope of the permit.
p. 184, 3rd par., 6th line	Change "being" to "between".	Correction will be made.
p. 185, 3rd par., 7th line	Change "... new transfer will ..." to "... new transfer pumps will ..."	Correction will be made.
Fig. 4-43	Why only show a typical pump pit but show all diversion boxes? Seems inconsistent.	The layout of most pump pits are shown. HPP5, HPP6, APP, and LPPP are not shown. Sketches of these missing pump pits will be included.
Fig. 4-43	Add note on "SPARE": (a) A 2nd pump ~~mey~~ may be installed here (or a jet pump is installed through a nozzle) in order to provide backup ability to empty the tank.	Correction will be made.
p. 188	Under what pemit will LPPP and APP be covered? DWPF? What about LPDT?	The H-S IAL is part of this permit application and will be part of our tank farm operating permit. LPDT is part of the H-S IAL and needs to be included. ?
p. 188	Where is the text section that goes with this? there was a "pump pit" section in the previous revision. Is this now a subsection of 4.8.4?	?

Page, Paragraph, and Line	Comment	Response
p. 188	For installed pumps, clarify that one is the mechanical pump and one is the steam jet (confusing). FPP3 tank capacity is 7000. Delete "Jet Pump" from HPP3. Delete "and Building 299-H" from HPP6 use description.	Refer to the mechanical pump as a transfer pump verses "Transfer". Other corrects will be made.
Fig. 4-44	What about the existing setup as mentioned in the text? Should mention on sketch that PP3 and DB2 are currently used instead of HPP7.	The sketch will show both the current arrangement and the future arrangement when the HDB8 facilities are operational.
p. 191, 1st par.	I still think you need to mention that we have the ability to pump through the F/H IAL without using the pump tanks (use a large pump in the sending waste tank). The PP is still always used for IAL drainage though.	Add the following sentence to the end of the paragraph: However, some pumps used to transfer wastes out of the waste tanks are powerful enough to send the waste through the H/F IAL without the additional support of the pump pits. The pump tanks are always used for IAL drainage.
p. 191, 1st par.	2nd line: Change "replace" with "replaced". 4th line: Delete "large".	Corrections will be made.
p. 197, 1st par., 5th line	Replace "cooling system" with "cooling systems".	Correction will be made.
p. 197, 2st par., 2nd line	Replace "Should the air supply ..." with "Should the electrical power or air supply ..."	Correction will be made.
p. 208	I read your response to my previous comment on this but I still think it is important. We need to be able to have RBOF send a lot of their wastewater to the 211H GP evaporator. CTM says this could end up being illegal?! We have to be permitted for this!	CTM is correct that it may be illegal but the determination of legality of any of are permitting issues are very gray. None of facilities required environmental permits prior to 1987. Determining what facilities need permits is negotiated with the regulators. It is probable that sometime in the future that the regulators may want

Page, Paragraph, and Line	Comment	Response
		to permit the GP evaporator and other waste processing equipment in the seperations facilities. However, the regulators have accepted our position so far without serious challenge that this equipment is all part of the seperations process. Second, the regulator currently are overwhelmed with other permits from SRS to be concerned with this equipment. EPD previously has stated that RBOF/RRF can send waste to the GP evaporator after the wastewater operations permit is approved. In addition, lab waste going to F-Area will still be OK. Lastly, our permit does not obligate RBOF/RRF to any commitments. We don't describe RBOF/RRF operations. EPD will set up a meeting to finalize and document our position.
p. 208	See previous comments on Fig 4.1 and p. 47	Comments to be incorporated in this section.
p. 208, first dot	5th line: Add the following after "removal": "or transfered to LHW evaporator"	Correction will be made.
p. 208, 5th par.	Check this. I thought we can receive some Lab waste directly (although I don't think we like to).	8th line: Change "It is necessary ..." to "Generally, it is necessary ..." Add the following sentence to the end of the paragraph on page 210: "Some SRL waste contain very low level radioactivity that can by unload at the Tank 47 truck unloading facility."
p. 218, 1st par.	Rainwater is the main source of accumulation in the sumps. Of course, collecting a process leak in the main reason for having the sumps. Need to include either?	The sumps are important to our secondary containment system and will be described in the Tank Assessment Document. The statement here should be changed as follows: "... ground water infiltration ..." to "... ground

Page, Paragraph, and Line	Comment	Response
		water and/or rain water infiltration ..."
p. 218, 2nd par., 3rd line	Change "i.e." to "e.g."	Correction will be made.
p. 219, 3rd and 4th dot	In some applications the only reason the chemicals are added is inhibition of corrosion. We sometimes use other acids (nitric, etc) but inhibit them before dumping to waste tanks.	The list of processes are supposed to be where we add chemicals and not a statement as to the purpose. Add "Nitric acid" to the list of chemicals with the same uses as "Oxalic acid".
p. 219, 3rd dot	Change "inhibitation" to "inhibition". Change "... cracking, aluminum dissolution, ..." to "... cracking and pitting corrosion, aluminum dissolution, ..."	Corrections will be made.
p. 222, 3rd par., 2nd line	Delete "either". See previous comments about chromium, GP evaporator, and evaporating tank 23 waste.	Reword consistent with previous comments for Fig. 4-1 and 4-7.
p. 223	Radionuclides concentration high end is to low. Our current limit for 242-H is 5000 d/m/ml (8.7x10^-6).	Either change the upper limit to 1.0x10^5 or make note indicating overheads from 242-H can be higher and as high as 1.0x10^5.
p. 224, 1st par., 4th line	O. K. to say this, but then should raise the upper pH in Table 5-11 to be about 11.	Change Table 5-11 high entree for pH to 11 or make a note as with the comments for p. 223.
p. 230, 2nd par., 7th line	Transfer pumps are not installed in some pits and many other containments (tank top riser huts, waste line LDB's, etc.). Is this O.K.?	The leak detection should be described in the Tank Assessment Report. We are not claiming the huts as containment devices. LDB's gravity drain to a waste tank (are there any that don't?). All other devices I am aware of have been accounted for in the permit and Tank Assessment Report. Are there any pump pits or

Page, Paragraph, and Line	Comment	Response
		diversion boxes that do not have either a jet or pump or gravity drain?
p. 231, 4th and 5th dot	Do these include the filter feed pumps installed in waste tanks 48?	We are treating the filter feed pumps as a general pump.
p. 234	Indicate that the installation date is for the current replacement pot. As mentioned earlier, a demister is one type of de-entrainer. Under demister dimensions change "length" to "height".	Change the titles for "De-entrainer" to "Bubble Cap Trays" and place both "Demister" and "Bubble Cap Trays" as subtitles of "De-entrainment". The other corrections will be made.
p. 235	Place a comma between "HORIZONTAL FIXED". Get year installed from WMO.	Change will be made. Year installed?
p. 238	Get year installed from WMO (most recent). These columns are often replaced with a repaired (or new) spare (i.e. rebuilt unit). The CRC's for 242-F, 242-16F, and 242-16H are interchangeable.	Year installed is ?
p. 240	Is year installed not needed? As stated previously, the CTS pump tank is a single, one piece, double walled tank, not two separate tanks, like the waste tanks.	?
p. 241	See BPF 210761. See comments on p. 234.	See response for p. 234. From BPF: ? already in it
p. 242	Place a comma between "HORIZONTAL FIXED".	Correction will be made.
p. 245	Check with WMO for year installed - I think 1983.	Year installed is 1990.
p. 247	See comments for p. 240.	See response for p. 240.

Link for Pump pit tank space

Page, Paragraph, and Line	Comment	Response
p. 248	See comments for p. 234.	See response for p. 234.
p. 252	Indicate that the current unit installed in 1989 is rebuilt.	Correction will be made.
p. 254	Rebuilt unit. See comments on p. 234.	Correction will be made. See response for p. 234.
p. 258	Rebuilt unit.	Correction will be made.
p. 260	The existing spare (being completed in 772-F) is the same as 242-16F, 242-16H, and 242-F pots. The next spare to be built (after the one in 772-F) will not have bubble cap trays, and the demister may be larger. Also the tube bundle will be a different material probably. (currently being specified and odered under some project.) Need to mention anywhere? [Also, see comments for p. 234.]	The planned spare should be included in this application. Details are provided in attached document. Other corrections will be made.
p. 274-285	Need to specify type of coiling coils (distributed verses bundle), as in III/IIIA tanks? Is it OK if we run at a different ventilation rate? Is this normal, max, min, etc? Will the annulus ventilation rate be added?	?
p. 288, 2nd par., 9th and 12th line	Replace "explosion" with "flammability" and "explosive" with "flammable". LFL is 4%H2, LEL is 18% H2, and we maintain below 4%.	Corrections will be made.
Fig. 7-2 and 7-3	Delete reference to instruments.	Delete "(Alarms on Failure)".
p. 291, 2nd par.	Your response on the previous draft was to delete this.	Delete paragraph.

Page, Paragraph, and Line	Comment	Response
p. 292, 2nd par., last line	Not sure this is the real reason ("The interval is set to allow the probe to dry prior to being lowered again.")	Delete sentence.
p. 292, 3rd par., 13th line	The level can't decrease but it can increase if the liquid enters the tank.	Change "change" to "decrease".
p. 292, 5th par., 3rd line	Change "... to the tank to measure ..." to "... to the primary tank exterior to measure ..."	Correction will be made.
p. 293, 1st par.	Use gages, not thermocouples on these tanks.	Corrections will be made.
p. 293, 3rd par., 4th line	Change "radiation monitors" to "isokinetic samplers".	Correction will be made.
p. 293, 3rd par., 5th line	Change "... continuous monitoring ..." to "... continuous radioactive monitoring ..."	Correction will be made.
p. 293, 5th par., 5th line	Required? By Who? Don't want to be held to having dip tubes in every annulus if we don't want to. Clarify.	Change "required" to "needed".
p. 301, 1st par.	This is not an exception. Same as type I. Delete paragraph.	Correction will be made.
p. 308 - 314	Cooling coil design heat transfer capacity - need to mention # of bundles (3-10)? Previous emperical data gives about 300K at best. O.K. to over estimate? (Tanks 29-35)	?
p. 331	What about pitting corrosion? What about the limits for ESP and ITP tanks, and the proposed limits for dilute	Need to review these limits in detail to be sure they reflect all of our current tech standards and TA's. Refer to attached

Page, Paragraph, and Line	Comment	Response
	waste tanks? (MFM TA's)	copies of tech standards and proposed changes.
p. 332, 2nd par.	First sentence should mean limiting it to below the capacity of the CW system.	Change "... into the waste tank." to "... into the waste tank to below the capacity of the cooling water system."
p. 332, 2nd par., 6th line	Change "... annulus space (see ..." to "... annulus space or cooling coils (see ..."	Correction will be made.
p. 332, 1st dot	Add to the end before the comma "and higher annulus air flow capacity".	Correction will be made.
p. 332, 3rd dot	Add comma between "mounted bottom".	Correction will be made.
p. 333, 5th par. 6th line	p. 332 says bottom supported. Which is right?	?
p. 334, 1st par, 5th line	Change "... and 35 to 37 ..." to "... and 36 to 51 ..."	Correction will be made.
p. 334, 2nd par., 4th line	Change "... coil unit." to "... coil unit (normally have 5-9 bundles installed)." See comment for p. 308-314.	Corrections will be made.
Fig. 7-6	Delete "(Alarms on Failure)". Add cooling water in and out to condenser.	Corrections will be made.
p. 336, 3rd par., 4th line	Change "... a high level alarm, ..." to "... a conductivity probe with a high level alarm, ..."	Corrections will be made.
p. 336, 3rd par., 5th line	As stated before, the III's have a magnetic themocouples on the tank wall, the IIIA's have permanent themocouples welded to the tank. Both have permanent themocouples on the bottom.	Corrections will be made.

Page, Paragraph, and Line	Comment	Response
p. 336, 3rd par., 7th line	Change "monitor" to "monitors".	Correction will be made.
p. 340 - 347	Secondary containment "N/A" needs to shift into line.	Correction will be made.
p. 350, 4th par.	The vent between 23 and 24 has been cut and capped.	See Ceravolo's sketch in draft permit. Change the paragraph accordingly.
Fig. 7-8	Delete "(Alarm on Failure)". Make the sketched shape of the fan round. Note 2.): Add at end of third and fourth line "(or are vented seperately)".	Corrections will be made.
p. 352, 3rd par., 4th line	Isn't ITP adding a combustible gas monitor to 21 or 22?	Corrections will be made.
p. 352, 3rd par., 6th line	Change "Only one thremowell ..." to "Normally, only one thermowell ..."	Corrections will be made.
p. 352, 3rd par., 7th line	Change "are" to "is".	Corrections will be made.
p. 352, 3rd par., 9th line	Change "... Type I tanks (see ..." to "... Type I tanks except they have no annulus instruments or cooling water instruments (see ..."	Corrections will be made.
p. 366, 3rd par.	Change "i. e." to "e. g." (two instances).	Corrections will be made.
p. between 366 and 367, Figure ?	Delete "NORMALLY RIGID".	Correction will be made.
p. 368, 4th par., 2nd and 7th line	Change "fix" to "fixed".	Corrections will be made.

Page, Paragraph, and Line	Comment	Response
p. 368, 4th par., last line	Give range - probably 20 - 80 gpm.	Correction will be made.
p. 369	Motor (HP) - 75: give range some are up to 150 or 200 HP (e.g. tank 22).	Correction will be made.
. 371, 2nd par., 4th - last lines	As stated before, this also applies to the TTP's	The information presented here applies to TTPs. Determine if appropriate to include this information with the discussion on TTP.
Fig. 7-10	Change "(STEEL COVER PLATE)" to "(WITH STEEL COVER PLATE)".	Correction will be made.
Fig. 7-1, 7-4, 7-5, 7-7, 4-21, and 4-21	See figures for comments.	Corrections will be made.
	From Cliff Thomas:	
p. 3	Missing: 100 Area waste trailers to tank 47 and DWPF cold runs waste to tank 47	?
p. 4, 2nd par.	Cold runs waste to tank 47.	?
p. 6	Low level liquid i.e. catch tank, sumps, etc.	The permit does not include these streams because they are not "process" effluent streams. Most of these streams may be addressed sometime in the future in a permit for the retention basin/storm water system.
p. 39, 1st par., 2nd line	Change "... segregated into ..." to "... segregated where practical into ..."	Correction will be made.

Page, Paragraph, and Line	Comment	Response
p. 40, 1st par., 1st line	The combined sludge may not be handled as HHW. HHW pump tank heels have been and probably will be in the future, placed in LHW tanks. They are still managed as LHW.	The sentence will be modified.?
p. 45, 2nd par.	Depends on amount: adding HHW to LHW may not change the characteristics significantly.	Change sentence to read as follows: "Generally, the opposite is not true; adding a small amount HHW to a waste tank containing LHW can change the characteristics (i.e., radionuclide content) of the LHW, but it depends on the quantity and characteristics of the HHW added."
p. 54, 3rd par. and p. 55	The radiation monitor has been eliminated in H and F Area. Sampler results from overheads tank determine diversion. Not correct process flow. Overheads can not be directed to CRC via overheads tank.	See response to comments from Ceravolo for p. 53 and 54.
p. 55, 3rd par., last line	Evaporator is allowed to reach 150 degrees C.	Change temperature to 150 degrees C.
p. 56, 1st par., 4th line	Verify that the liquid level is maintained at least 6" above the heater bundle.	?
p. 74, 3rd par., 3rd line	Check the dates 1958 and 1962. I think they are 1962 and 1964.	?
p. 74, 4th par., last line	If you use words design rates then it sounds like the 2F is operating over design capacity when processing waste @ 14 gpm.	In the permit application the flow rate refers to overheads flow rate. Your flow appears to refer to feed rate. We chose overheads as the product, thus the overheads production rate would be the capacity. The overheads

Page, Paragraph, and Line	Comment	Response
		represent the final product that eventually get released to the environment via ETF. This is what makes us a wastewater treatment plant. The production rates in the permit should reflect the maximum capacity possible with existing equipment and operating procedures.
p. 75, 2nd dot	Valves on 242-16F are automatic.	Change the section to refer to changes verses the 242-H evaporator that it will replace.
p. 77, 3rd par.	These radiation monitors have been removed in existing evaporators in some cases.	See answer to comments from Ceravolo about p. 53. Change "The radiation monitor for the existing ..." to "Generally, the radiation monitor for existing ..."
p. 77, 4th par.	Talk about the old system valves not being interlocked. Using the word automatic is missleading.	Replace the word "automatic" with "interlocked" in this paragraph (2 instances)
p. 166, 1st par., 4th line	Change "... diversion varies ..." to "... diversion box varies ..."	Correction will be made.
p. 188	What's a dead pump?	?
p. 213	Section 5.1.7 should include information about cold run waste to tank 47 in F-Area.	?
p. 260	?	Same as current 242-16H, 242-16F, and 242-F. See response to Ceravolo's comments on p. 260.
p. 262	Material of construction has changed per EES.	? (Need info from Thomas.)
p. 358	Evaporator feed pump is subject to change.	The way the permit is written, we reinforce the idea of

Page, Paragraph, and Line	Comment	Response
		changing pumps. SCDHEC is not used to facilities such as ours and we will be making an unusual proposal. The permit already points out the fact that we want to change pumps without permit modifications and everyone at SCDHEC will be very much aware of this difference. In addition, we plan to invite SCDHEC for a visit of the tank farms prior to submitting the application. We will introduce most of our unusual (in SCDHEC's view point) needs for flexability in our permit during their visit.
p. 365	FPP1: Add recirculating pump. FPP3: Morris Battison in agitator position.	? (Need info from Thomas.)
p. 373	Is seal manufacturer Durmetallic current?	?
	From Mark Reimnitz:	
p. 145, 4th par., 6th line	Change "2-inch" to "3-inch".	Correction will be made.
p. 148	Line numbers 210 and 211 should be Type II lines?	Refer to print S5-2-722.
p. 149	Line numbers 212, 213, 520, and 521 are Type II lines (reference S5-2-7222).	Corrections will be made.
p. 152	Line numbers 42E and 48E are Type II lines (reference W718949 or 449?).	Corrections will be made.
p. 155	HDB5[8] to Tank 24 is missing.	It will be found. ?
	From J. C. Eargle (J. W. Nelson):	

Page, Paragraph, and Line	Comment	Response
p. 10	There appears to be a word missing in the 5th line of text ---, for permission to (_____) a facility ---	Insert "build/operate" between "...for permission to ___ a facility ..."
p. 12	Is the signiture on this page for the design engineer or the construction engineer?	Nelson will provide suggested language for the signiture paragraph.
p. 27	Need to add spare lines from 221S to LPPP to APP to HDB8.	What additional facilities are missing? I need to find out more INFO
p. 29, 2nd par.	Z-Area does not solidify all waste water with radioactive levels "too high" to discharge. If so salt solution would qualify. Believe they are trying to say "too high to discharge to environment, but less than some fixed level." Waste water with radioactivity above Some fixed level will be processed at DWPF. The next sentence in the paragraph doesn't make sense either. ---vitrifies the tank sludges and treatment precipitates for offsite---. Do they mean precipitates resulting from In Tank Precipitation of the High Level Salt Solution?	Change the two sentences "The Z-Area SMDF provides ... precipitates for offsite disposal." to "The Z-Area SMDF provides solidification and on-site disposal for wastewaters that have high concentrations of dissolved solids. The DWPF Vitrification Facility vitrifies the insoluble solids including tank farm sludge and ITP precipitate."
p. 33	Add (SCDHEC Industrial Waste Water Permit No. 16783) to last paragraph in Section 3.4.	Addition will be made.
p. 88	Para. 4.5.1.2: Is QA/QC the proper terminology?	?
p. 156	Table 4-11, H/S interarea transfer line: Need to add the spare line from APP to/from HDB-8. Line origin/destination is reversed for lines 401E, 402E, 403E, 501E, 502E, and 503E.	What information is needed to describe the spare line? The other changes will be made.

Page, Paragraph, and Line	Comment	Response
p. 164	Do we use "rubber" gaskets in the tank farms? I thought it was teflon impregnated asbestos.	See response to Ceravolo's comments on p. 24.
p. 180, Fig. 4-41	The attached table summarizes the discrepancies between Figure 4-41, Figure 4-22 (large blue line insert) and the P&ID's. I am not sure which is correct, but I have to assume that P&ID's are correct. They were recently issued to clean up all known changes. We probably need to review these in detail with people in the know at New Waste Transfer Facility.	Corrections will be made.
p. 274 through 285	Need to add the units for design pressure, PSI or inches water?	Should be PSI, recheck.
p. 340 through 347	Need to add the units for design pressure, PSI or inches water?	Should be PSI, recheck.
p. 355	The words describing the testing for P Code P48 "--- tested by the air under water pressure test ---" do not make sense to me. I am not sure what they are trying to say. In this same section need to include the specifications for P Code P224A which was used in the H/S transfer lines.	?? Jack Nelson
p. 365	The transfer pumps listed for HPP7, HPP8, HPP9, and HPP10 should be the same as those for the APP and The LPPP. See comments on page 367.	Corrections will be made.
p. 367	Information for the transfer pumps in the APP and The	Corrections will be made.

Page, Paragraph, and Line	Comment	Response
	LPP are: Manufacturer, Barrett-Haentjens; Type, Vertical; Rates, 100 GPM @ 550 ft.	
p. 368	In the 4th line under Jet Pumps venturi is misspelled. Not sure what a "venturé" type assembly is?	Correction will be made.
Fig. 2-5	Topographic Map (large Blue Line Insert): Lines coming from Tanks 40, 49, and 51 to APP are not shown, need to add. See Figure 4-22 (large Blue Line Insert) and Table 4-11 on page 156.	Correction will be made.
	From DOE:	
p. 7	The United States Department of Energy is listed as the operator of the SRS. This needs to be changed to indicate that Westinghouse Savannah River Company (WSRC) is the operator.	The paragraph will be deleted.
p. 13	Independent Verification - There is a note included with this section stating that a facility inspection was to be conducted in May, 1990. This section needs to be updated to include the results of the inspection.	The inspection was completed in November with the report to be completed shortly. The report or summary of the report (probably only a few paragraphes for the permit application) will be included.
p. 211 Table 5-6	Some of the information has been omitted from this Table it should be included if available.	The missing data will be found.
p. 231	The last sentence of Section 6.1 states that pump curves are included in Appendix A. A review of the pump curves indicated that it was very difficult to determine which curve pertained to which pump. Each curve needs to be	The pump curves will be labeled by a cover sheet explaining which pump the data belongs to and where the pump is used.

Page, Paragraph, and Line	Comment	Response
	identified.	
p. 287, 4th par.	The second sentence includes a statement concerning heat transfer capacity. However, a BTU/hour figure is not given.	The heat transfer capacity is ?
p. 295, 1st par., 1st line	First sentence - this should read, "The Type II waste ..."	Correction will be made.
p. 330, 4th par., 5th line	The fifth line should read, "... presence of both nitrite and ..."	Correction will be made.
p. 357, 3rd par.	Section 7.6.1 - The fourth sentence needs to be clarified. There are either too many words or something has been omitted.	?
p. 359, 361, 362, and 363	Most of the information on the pump specifications is missing. This needs to be added.	The missing information will be included.
p. 367	Table 7-87 - None of the information for six Jet pumps has been included.	Information for the jet pumps will be included.
	From Others:	
p. 185, 2nd par., 1st line	Delete "are".	Correction will be made.

Note: ? indicate locations that C. T. Main needs to answer or provide input before a response can be made.

November 6, 1990

TO: Danny Dunaway, Manager
Permitting Field Support Group
WSRC Environmental Protection Department

COMMENTS ON THE DRAFT F/H-AREA HIGH-LEVEL TANK FARM CONSTRUCTION PERMIT APPLICATION

Attached for your use is a copy of the subject comments. One comment of note is that I believe that the application should include the stormwater retention basins in F- and H-Areas.

Questions may be directed to me at x5-3968.

Gary S. Hoover
SR Environmental Division

Attachment

cc w/attach:
Tom Treger, DOE-SR ERD, 703-A
Lee Watkins, DOE-SR HLWD, 704-S
Andy McClure, NUS
G. S. Hoover, ED
File

COMMENTS ON
DRAFT AS-BUILT CONSTRUCTION PERMIT
APPLICATION PACKAGE FOR THE F- AND H-AREA
HIGH LEVEL TANK FARMS

BACKGROUND

This permit application is being submitted to SCDHEC to obtain a construction and operating permit for the F- and H-Area High Level Waste (HLW) Tank Farms. It is being submitted pursuant to the provision of Section IX of the Federal Facility Agreement (FFA) for the Savannah River Site (SRS). We have reviewed the application and offer the following comments.

GENERAL COMMENTS

There are a number of typographical and grammatical mistakes in the narrative. It would be advisable to have this document reviewed by a technical editor prior to being submitted to SCDHEC.

COMMENTS

1. Page 7 - The United States Department of Energy is listed as the operator of the SRS. This needs to be changed to indicate that Westinghouse Savannah River Company (WSRC) is the operator.

2. Page 1, Independent Verification - There is a note included with this section stating that a facility inspection was to be conducted in May, 1990. This section needs to be updated to include the results of the inspection.

3. Page 211, Table 5-6 - Some of the information has been omitted from this Table. It should be included if available.

4. Page 231 - The last sentence of Section 6.1 states that pump curves are included in Appendix A. A review of the pump curves indicated that it was very difficult to determine which curve pertained to which pump. Each curve needs to be identified.

5. Page 287, Paragraph 4 - The second sentence includes a statement concerning heat transfer capacity. However, a BTU/hour figure is not given.

6. Page 295, First Sentence - This should read, "The Type II waste . . .".

7. Page 330, Third Paragraph - The fifth line should read, ". . . presence of both nitrite and . . .".

8. Page 357, Section 7.6.1 - The fourth sentence needs to be clarified. There are either too many words or something has been omitted.

9. Pages 359, 361, 362, and 363 - Most of the information on the pump specifications is missing. This needs to be added.

10. Page 367, Table 7-87 - None of the information for six Jet pumps has been included.

11. It was noted that there was no mention of the cooling water and stormwater retention basins in each of the areas. If contamination is found in the waste water in any of these basins, the waste water can be rerouted to the H-Area high level waste tanks. Thus, it would appear that both types of basins, in each area, should be addressed in this application.

W-0517

INTER-OFFICE MEMORANDUM
Savannah River Site

Date: 08-Aug-1991 07:44am EDT
From: Jeff Pike
PIKE-JA-Y5547 AT A1 AT SASRS2
Dept: WMT
Tel No: x7-8843

TO: See Below

Subject: Summary of **SCDHEC Visit to the Tank Farms on August 6**

SCDHEC personnel toured the F and H Area Tank Farms on August 6. The purpose of the visit was to prepare them for review of the tank farm wastewater permit application.

The personnel from SCDHEC included Carl Richardson, Wastewater Section Supervisor; Larry Arrington, Engineer that will review the application; Kim Cauthen, District Director; and Jeff Chapman, District Engineer.

Despite the lack of air conditioning in the tour van, the visit went very well. EPD reports that the presentations satisfied SCDHEC's needs at this time. The following bits of information were learned from the visit:

SCDHEC plans to start their review of the permit application by the end of this month. Comments may be generated in 2 to 3 months.

SCDHEC plans to proceed with review and approval of the wastewater permit application even though they have not decided what to do with the tank assessments. The assessments, required by the Federal Facilities Agreement (FFA), are supposed to be part of the permit application. Since the FFA has not yet been signed, SCDHEC has no funds to review the assessments and will probably not review them for some time. However, Carl Richardson said that he sees no reason that this should hold up review and approval of the permit application, since the money for that review comes from separate operating budget, which is adequately funded. SCDHEC will begin review of the tank assessments whenever money becomes available.

SCDHEC indicated that 4 to 6 operators in charge may be assigned to a permit as long as SRS clearly identifies one operator in charge responsible for each facility.

Every operator does not need to be licensed. The individual that makes decisions "to turn valves" will need to be licensed. SCDHEC explained that the requirement depends on the decision making processes. In our culture, an operator in the field must follow a procedure verbatim. The person initiating or approving the use of the procedure would likely need to be licensed. SCDHEC indicated that they thought it was appropriate for the facility manager or some one at that equivalent level to be licensed.

SCDHEC indicated that there does not seem to be any problems with permitting ITP separately as WM has requested. Obviously, they could not commit to such a decision at the time.

Note: * on the distribution indicates attendance to the presentations

and/or discussions.

I would like to thank Cathey Sizemore for help in making arrangements for lunch and Alicia Curry for assistance during the tours/presentations for smoothing out problems that occurred.

Distribution:

TO:	A. R. Gough, 742-A, *	(PAPER MAIL AT A1 AT SASRS2)
TO:	R. D. Kowalski, MDC-112 *	(PAPER MAIL AT A1 AT SASRS2)
TO:	Joe P. Cohen, DOE *	(COHEN-JP-B6293 @A1@SASRS3)
TO:	Kim S. Wierzbicki *	(WIERZBICKI-KS-O6535 AT A1 AT SASRS2)
TO:	Charles R. Hayes *	(HAYES-CR-Z9722 @A1@SLSRP1)
TO:	Charles E. Anderson	(ANDERSON-CE-B7688 AT A1 AT SASRS2)
TO:	Carroll McFall *	(MCFALL-NC-B7643 AT A1 AT SASRS2)
TO:	C. Blair-McManus, 703-H	(PAPER MAIL AT A1 AT SASRS2)
TO:	Ronald E. Walker	(WALKER-RE-Y4285 @A1@SLSRP1)
TO:	J. V. ODUM	(ODUM-JV-O4184 @A1@SLSRP1)
TO:	W. DANNY DUNAWAY *	(DUNAWAY-WD-O7436 @A1@SLSRP1)
TO:	Kathy Z. Wolf *	(WOLF-KZ-O9884 AT A1 AT SASRS2)
TO:	STEVEN E. CROOK	(CROOK-SE-O7646 AT A1 AT SASRS2)
TO:	SUSAN D. THOMAS	(THOMAS-SD-O6614 AT A1 AT SASRS2)
TO:	Matthew A. Hunter	(HUNTER-MA-L2335 AT A1 AT SASRS2)
TO:	CARY B. STEVENS	(STEVENS-CB-O5981 AT A1 AT SASRS2)
TO:	TIMOTHY P. GAUGHAN *	(GAUGHAN-TP-O8815 AT A1 AT SASRS2)
TO:	Bill Van Pelt	(VANPELT-WB-O7016 AT A1 AT SASRS2)
TO:	Mario A. Ceravolo, 703-H	(CERAVOLO-MA-O7495 AT A1 AT SASRS2)
TO:	PAUL D. D'ENTREMONT *	(D'ENTREMONT-PD-O5438 AT A1 AT SASRS2)
TO:	MICHAEL C. CHANDLER *	(CHANDLER-MC-O6868 @A1@SRXSS2)
TO:	Fred G. McNatt, Sr. *	(MCNATT-FG-O3629 AT A1 AT SASRS2)
TO:	MICHAEL C. CHANDLER	(CHANDLER-MC-O6868 @A1@SRXSS2)
TO:	ROBERT A. SCAGGS *	(SCAGGS-RA-O2380 AT A1 AT SASRS2)
TO:	WALTER A. WILSON	(WILSON-WA-O5215 @A1@SLSRP1)
TO:	Arthur S. Greer *	(GREER-AS-Y6907 AT A1 AT SASRS2)
TO:	RONALD C. MILLER 241-121H	(MILLER-RC-O9334 AT A1 AT SASRS2)
TO:	NEIL R. DAVIS *	(DAVIS-NR-O5416 AT A1 AT SASRS2)
TO:	Robert W. Wilson	(WILSON-RW-T4847 AT A1 AT SASRS2)
TO:	L.C. Thomas *	(THOMAS-LC-O5194 AT A1 AT SASRS2)
TO:	V.G. Dickert	(DICKERT-VG-O4857 AT A1 AT SASRS2)
TO:	SUSAN S. CATHEY *	(CATHEY-SS-O4949 AT A1 AT SASRS2)
TO:	L.H. Aiken *	(AIKEN-LH-O5403 AT A1 AT SASRS2)
TO:	Hani A. Abodishish	(ABODISHISH-HA-B7909 AT A1 AT SASRS2)
TO:	J. J. Sherpenberg, 707-H	(PAPER MAIL AT A1 AT SASRS2)
TO:	P.H. Stevens	(STEVENS-PH-T4978 AT A1 AT SASRS2)
TO:	THOMAS M OSBORNE	(OSBORNE-TM-O3196 AT A1 AT SASRS2)
TO:	CATHY K. SIZEMORE	(SIZEMORE-CK-W7402 AT A1 AT SASRS2)
CC:	Alicia L. Curry	(CURRY-AL-Y8589 AT A1 AT SASRS2)
C:	CATHY K. SIZEMORE	(SIZEMORE-CK-W7402 AT A1 AT SASRS2)

W0517

INTER-OFFICE MEMORANDUM
Savannah River Site

Date: 07-Aug-1991 08:26am EDT
From: W. DANNY DUNAWAY
DUNAWAY-WD-O7436
Dept: ENVIRONMENTAL PROTECTION
Tel No: 5-5754

TO: See Below

Subject: SCDHEC VISIT TO F/H HIGH LEVEL TANK FARMS

AS I MENTIONED TO YOU YESTERDAY (8/6), THE SCDHEC VISIT TO THE F/H HIGH LEVEL TANK FARMS WENT VERY WELL. THE CONTEXT OF THE INFORMATION PRESENTED WAS RIGHT ON THE MARK WITH RESPECT TO THE NEEDS OF SCDHEC. LOGISTICALLY, THE VISIT WENT EXTREMELY WELL!!!

SCDHEC WAS SUFFICIENTLY BRIEFED ON THE NEED OF HAVING THE ITP PORTION OF THE PERMIT BY DECEMBER, '91. HOWEVER, DUE TO RECENT BUDGET CUTS IN SCDHEC, I BELIEVE THAT THE IMPORTANCE OF MEETING THIS SCHEDULE SHOULD BE MENTIONED IN THE FORTHCOMING CAMPBELL/HEENAN/SHAW MEETING. I WILL PREPARE A SUMMARY PAGE ON THE SUBJECT FOR CAMPBELL'S USE (VIA GAIL JERNIGAN).

PLEASE LET ME KNOW IF YOU HAVE ANY QUESTIONS.

Distribution:

TO:	Jack Roberts	(ROBERTS-JS-O5782)
TO:	J. V. ODUM	(ODUM-JV-O4184)
CC:	MONTE HAWKINS	(HAWKINS-M-O6779)
CC:	Gerry F. Stejskal	(STEJSKAL-GF-Y6594)
CC:	Charles R. Hayes	(HAYES-CR-Z9722)
CC:	Todd Wright	(WRIGHT-GT-T6181 @A1@SASRS2)
CC:	SUSAN S. CATHEY	(CATHEY-SS-O4949 @A1@SASRS2)
CC:	PAUL D. D'ENTREMONT	(D'ENTREMONT-PD-O5438 @A1@SASRS2)
C:	Jeff Pike	(PIKE-JA-Y5547 @A1@SASRS2)

Folder #2

DON'T SAY IT - WRITE IT

October 16, 1990

TO: Gary Hoover

FROM: Danny Dunaway Danny D.

WASTEWATER PERMIT APPLICATION FOR HIGH LEVEL TANK FARMS IN F/H AREAS

Please find enclosed for your review a copy of the wastewater permit application package for the High Level Tank Farms in F/H Areas. In order to remain on schedule for submittal of this package to SCDHEC, it is requested that your comments be returned to me by November 9, 1990.

Please let me know if you have any questions.

Thanks!

WESTINGHOUSE SAVANNAH RIVER COMPANY

INTER-OFFICE MEMORANDUM

October 9, 1990

To: W. D. Dunaway, 703-18A

JP

From: J. A. Pike, 703-H, 7-8843

DRAFT F AND H AREA TANK FARM WASTEWATER PERMIT APPLICATION FOR DOE REVIEW

Please transmit the attached draft wastewater permit application to DOE for review and approval. The application must be submitted to SCDHEC by March 31, 1991, in order to comply with the Federal Facilities Agreement. DOE must return comments by November 15 to meet the current schedule.

If there are any questions, please contact me at 7-8843.

CC: R. G. Garvin, 703-H
S. S. Cathey, 703-H
B. L. Lewis, 703-H
P. D. d'Entremont, 703-H
T. P. Gaughan, 241-120H
K. S. Weirzbicki, 703-H
T. H. Killian, 703-H
G. H. Street, 703-H
S. Crook, 703-H
WMT Files, 703-H
File Code: 175.15

W-0517

WESTINGHOUSE SAVANNAH RIVER COMPANY

INTER-OFFICE MEMORANDUM

October 9, 1990

To: W. D. Dunaway, 703-A (3 copies)
R. W. Wilson, 703-H
L. C. Thomas, 703-F
T. H. Killian, 703-H
W. B. Van Pelt, 241-121H
T. P. Gaughan, 241-120H
M. A. Ceravolo, 242-24H
G. H. Street, 703-H
M. J. Mahoney, 703-H
S. Crook, 703-H

From: G. T. Wright, 703-H GTW

THIRD DRAFT OF TANK FARM WASTEWATER PERMIT APPLICATION

Attached is the third draft (revision D) of the F and H Area Tank Farms Industrial Wastewater Permit Application and a listing of Commitments from the Tank Farm Wastewater Permit Application. WSRC will officially transmitted this draft to DOE for review. This is our last chance to review this application. This permit could have a significant impact on tank farm operations so make sure it gets a good review. Please review the sections that pertain to your area of responsibility or appoint a delegate to review it for you. Return comments to J. A. Pike (703-H, 7-8843) by November 1, 1990. A timely review of the permit application is needed to keep ITP on schedule.

Your review of the permit is needed to ensure that the application is accurate but still has sufficient flexibility to allow minor changes in operation. Certain sections of the application make commitments to SCDHEC and demand careful attention to detail. The list of Commitments from the Tank Farm Wastewater Permit Application details commitments scattered throughout the document. If significant problems are discovered we need to know now so they can be incorporated into the application.

Thank you for you help.

CC: R. G. Garvin, 703-H (without attachment)
R. A. Scaggs, 703-H (without attachment)
S. S. Cathey, 703-H (without attachment)
N. R. Davis, 241-120H (without attachment)
D. C. Blair, 241-28H (without attachment)
B. L. Lewis, 703-H
P. D. d'Entremont, 703-H
K. S. Weirzbicki, 703-H
J. A. Pike, 703-H
W. D. Conner, 704-43S
V. Wheeler, 704-43S
WMT Files, 703-H
File Code: 175.15

Commitments from the Tank Farm Wastewater Permit Application

The Tank Farm Wastewater Permit Application scope ends at the following boundaries:

at the "wall" of the Separations Facilities;
at the security fence of RBOF/RRF;
at the "wall" of HDB-8 for transfer lines from ETF (transfer lines are part of ETF permit);
at the "wall" of DWPF;
immediately after valve on line from evaporator overheads tanks used to direct flow to waste tank or ETF;
at "wall" of tank 50;
permit application does not include tank 16 or tank 50 but does include transfer facilities up to these tanks.

The application commits Waste Management (WM) to modifying the ETF Permit to permit the High Level Waste Replacement Evaporator's (RHLWE) tie-in to the ETF Process Sewer.

The application commits WM to a Professional Engineer's inspection and certification to SCDHEC prior to operation that the RHLWE was constructed according to information provided in the application.

Section 1.5 of the application commits WM to file a permit modification for additional capacity or alteration that cause the characterization limits in Section 5.2 to be exceeded or increases the effluent flow rate above the following limits:

Evaporator overheads/treated RBOF/RRF wastes	27,000,000	Gal/year
Decontaminated Salt Solution	13,000,000	Gal/year
Washed Precipitate Slurry	800,000	Gal/year
Washed Sludge Slurry	500,000	Gal/year

No permit modifications will be filed for replacement of components with identical items, ie. items that match the description in the application.

The application commits WM to providing secondary containment meeting the specifications of the Federal Facility Agreement (FFA) for all future facilities installed or replaced unless replaced with identical components, ie. items that match the description in the application.

Section 1.6 of the application commits WM to file an annual Tank Inspection Report with SCDHEC by July 1st of each year. The Tank Inspection Report and methods of inspection proposed to be filed each year are the WM's current Tank Inspection Program Report and methods used by our tank inspection group. However, SCDHEC may ask for more or different methods than what we offer, but other permitting experience around SRS does not show any indication if SCDHEC will ask for anything different.

Section 4.2 of the application outlines typical tank farm operations that occur regularly that are unusual for normal wastewater facilities. As part of SCDHEC's permitting process, they may ask to be notified and/or request permit modifications for some activities. WM proposes not to file permit modifications for these activities as long as they occur with in the descriptions in the permit application.

The application commits WM to replace pumps with at least the transfer capacity and total dynamic head listed in Section 7.6.

The application commits WM to use only Zeolite or the new resin, Resorcinol/Fomaldehyde Condensation Polymer, in the Cesium Removal Column (CRC) unless we notify SCDHEC otherwise.

The application commits WM to always have available a pump or jet in a pump tank to pump the tank contents to a waste tank via a dedicated transfer line.

The application commits WM to maintain a minimum velocity of about 2 ft/sec in both gravity drain and CTS evaporator concentrate transfer lines.

The application commits WM to maintain about 300,000 gallons of liquid storage above salt in type II and III/IIIA salt storage tanks. The application allocates this space for salt removal operations.

The application commits WM to start construction of RHLWE under existing Part A RCRA status, continue construction through transition to wastewater status, and start operations under wastewater.

After the RHLWE is operating, the current description in the application commits WM to maintain 1H Evaporator for back up purposes and limit use the 1F Evaporator to periods of peak demand only. In order to be consistent with previous arguments to the SCDHEC, the commitment should be remove 1H from service and maintaining 1F in back up for periods of peak demand. This change will be made to the application before

sending to SCDHEC.

The facility description in the application for the RHLWE does not include provisions for a CRC.

The facility description in the application lists the existing CRC's as optional process equipment that will be used only if ^{137}CS concentrations are higher than acceptable by ETF.

The application commits WM to start-up ITP (start-up occurs when the first process chemicals enter the facility) under existing Part A RCRA status. Hot start-up of ITP may occur at any time in the view point of wastewater permitting requirements.

The application describes the ITP start-up facilities installed temporarily for cold run operations. This description is included because the facility modifies the application's description of the ITP facility. However, the current detail included may be to rigid and may not allow needed flexibility for ITP start-up operations.

The application commits WM to limit ^{106}Ru concentration in Decontaminated Salt Solution to 47 micro-Ci per pound of salt on a dry basis. The process used to remove ^{106}Ru from the waste is radiolytic decay by aging the waste in the waste tanks prior to processing in ITP.

The application commits WM to continue segregation of HHW and LHW for separate processing.

The application restricts WM from combining fresh salt cake with aged salt cake in the ITP process.

The application commits WM to produce effluents within permitted influent specifications of each facility.

W-0517

SAVANNAH RIVER SITE

802 East Martintown Road
BTC
North Augusta, SC 29841
(803)442-5183

FACSIMILE TELECOPIER #803-442-5183

To Verify Fax: 442-5130

RECEIVED
1990 SEP 14 AM 10:30
SACNET CENTER

DATE: 9/14/90
TIME: 10:05

We are transmitting ___ pages (including this cover page).

Please deliver the following pages to:

NAME CHUCK HAYES (725-8838)
COMPANY/FIRM WSRC
CITY/STATE
TELECOPIER 725-1259

The following pages are from:

NAME GEORGE GARCIA
COMPANY/FIRM BSRI
CITY/STATE
LOCATION/NUMBER 442-5218

REMARKS: PLEASE SHARE INFORMATION WITH OTHER INDIVIDUALS WHOSE AREAS OF PERMITT RESPONSIBILITIES MAY BE AFFECTED BY THIS SURVEY.

If you have any problems with this fax please call 442-5130

REPLACEMENT HIGH-LEVEL WASTE EVAPORATOR

Date: 9/13/90

PRELIMINARY

PERMIT	AGENCY	SUBMITTAL	APPROVAL	APPROXIMATE TIME	DEGREE OF DIFFICU
AIR QUALITY	SCDHEC			20 WEEKS	NONE
POLLUTION CONTROL GEN.	SCDHEC			3 MONTHS	NONE
AIR EMISSIONS (PSD)	SCDHEC			12 MONTHS	TIME DEPENDENT
RCRA PART A MODIFICATION	SCDHEC/EPA	SUBMITTAL DATE	APPROVAL DATE	2 MONTHS	DEPENDENT ON MOD
NPDES MODIFICATION	SCDHEC			6 MONTHS	DEPENDENT ON MOD
EROSION CONTROL	WSCR-EPD			1 WEEK	NONE
UTILITIES ACCEPTANCE	WSCR-AREA CUSTODIAN, DOE-SR			4 WEEKS	NONE
POWER SERVICE UTILIZATION	WSCR-POWER DEPARTMENT			3 WEEKS	NONE
SITE CLEARANCE	WSCR-FACILITIES AND SERVICES			2 MONTHS	NONE
SITE USE	DOE-SR			3 MONTHS	NONE
DOMESTIC WATER DISTRIBUTION	SCDHEC			9 MONTHS	TIME DEPENDENT
WASTEWATER TREATMENT	SCDHEC			11 MONTHS	TIME DEPENDENT
WASTEWATER COLLECTION/TRANSMISSION	SCDHEC			9 MONTHS	NONE
DISPOSAL SPOIL/ CONSTRUCTION RUBBLE	SCDHEC			6 MONTHS	DEPENDS ON CONTA
HAZARDS ASSESSMENT DOCUMENT	DOE-SR			8 WEEKS	NONE
SAFETY ASSESSMENT DOCUMENT	DOE-SR			4 MONTHS	TIME DEPENDENT
SAFETY ANALYSIS REPORT	DOE-HQ			TBD	
WORK CLEARANCE	RESPONSIBLE CUSTODIAN			2 MONTHS	NONE
EXCAVATION				1MONTH	NONE
PROFESSIONAL ENGINEER CERTIFICATION	SUBMIT TO SCDHEC WITH PERMIT APPLICATION			DEPENDS ON COMPLEXITY	

PRELIMINARY

PERMIT SCHEDULE

REPLACEMENT HIGH-LEVEL WASTE EVAPORATOR

09/13/1990

Activities	AGENCY	SUBMITTAL DATE	APPROVAL DATE	DEGREE OF DIFFICULTY
AIR QUALITY PERMIT	SCDHEC	09/14/90	02/28/91	NONE
POLLUTION CONTROL GEN.	SCDHEC	09/15/90	12/15/90	NONE
AIR EMISSIONS PSD	SCDHEC	09/14/90	09/11/91	TIME DEPENDENT
RCRA PART A MODIFICATION	SCDHEC /EPA	09/09/90	11/17/90	DEPENDENT MODS.
NPDES MODIFICATION	SCDHEC	09/14/90	04/04/91	DEPENDENT MODS.
EROSION CONTROL	WSCR - EPD	08/11/91	08/23/91	NONE
UTILITIES ACCEPTANCE	WSCR - AREA CUSTODIAN ; DOE	06/30/91	08/01/91	NONE
POWER SERVICE UTIL.	WSCR - PD	06/30/91	08/01/91	NONE
SITE CLEARANCE	WSCR - DOE	09/14/90	11/29/90	NONE
SITE USE	DOE - SR	09/14/90	11/29/90	NONE
DOMESTIC WATER DIST.	SCDHEC	04/06/91	09/25/91	TIME DEPENDENT
WASTEWATER TREATMENT	SCDHEC	09/01/91	09/23/92	TIME DEPENDENT
WASTEWATER COLLECT SYS	SCDHEC	09/14/90	08/18/91	NONE
DISP SPOIL/ CONST. RUBBLE	WSCR	06/02/91	01/11/92	DEPENDS RADIOACTIVITY

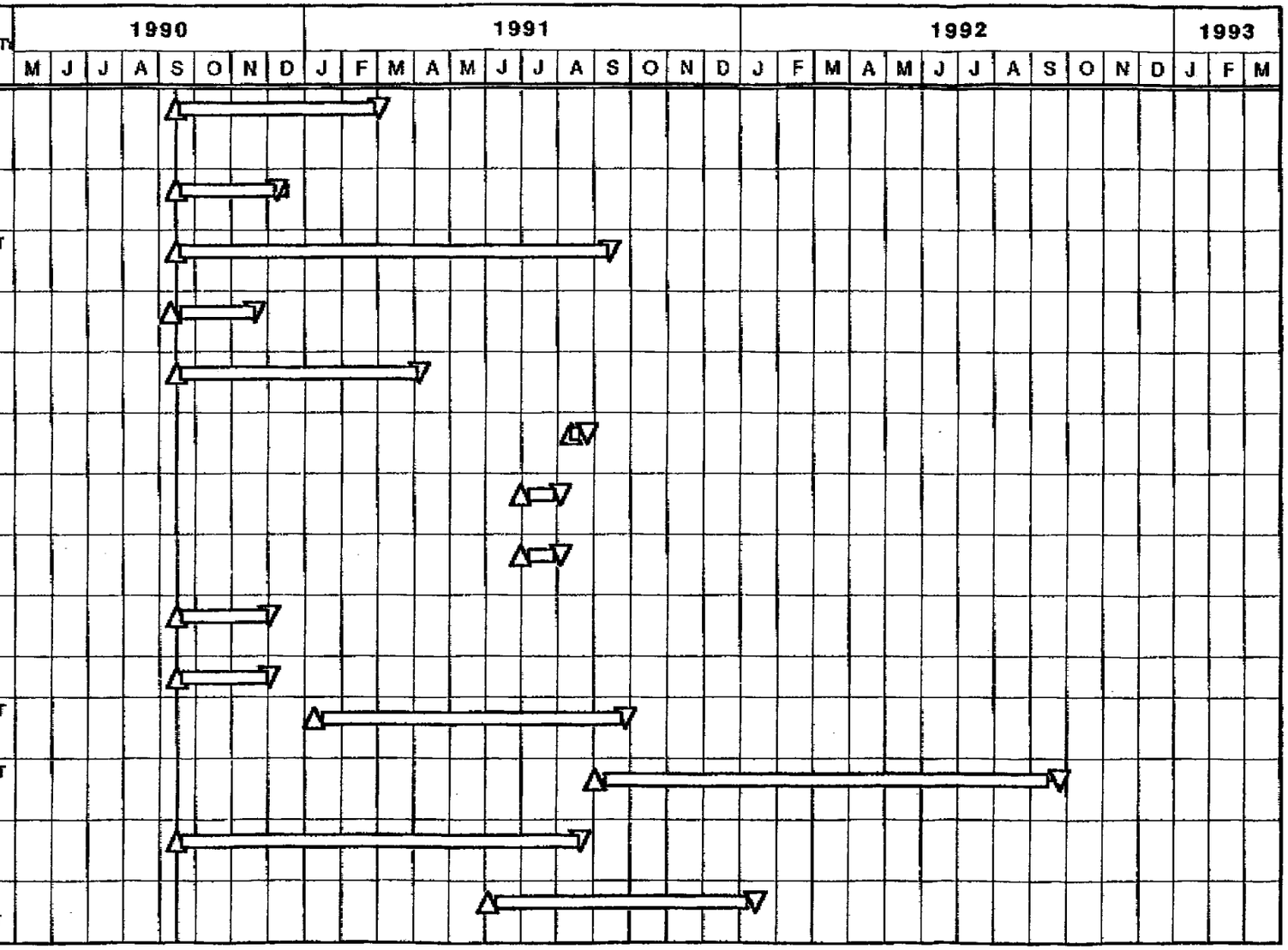

SEP 14 '90 09:28 BECHTEL - SRP INC LEA HALL P.3/4

PRELIMINARY

PERMIT SCHEDULE

REPLACEMENT HIGH-LEVEL WASTE EVAPORATOR

09/13/1990

Activities	AGENCY	SUBMITTAL DATE	APPROVAL DATE	DEGREE OF DIFFICULTY
HAZARD ASSESS DOCUMENT	DOE - SR	06/03/90	09/11/90	NONE
SAFETY ASSES DOCUMENT	DOE - SR	09/14/90	02/02/91	TIME DEPENDENT
SAFETY ANALYSIS REPORT	DOE - HQ			INSUFFICIENT INFORMATION
CONSTRUCTION	SCDHEC			
WORK CLEARANCE	RESPONSIBLE CUSTODIAN	05/24/92	07/25/92	NONE
EXCAVATION	RESPONSIBLE CUSTODIAN	05/31/92	07/04/92	NONE
PROF ENG CERTIFICATION	RESPONSIBLE CUSTODIAN			DEPENDS ON COMPLEXITY

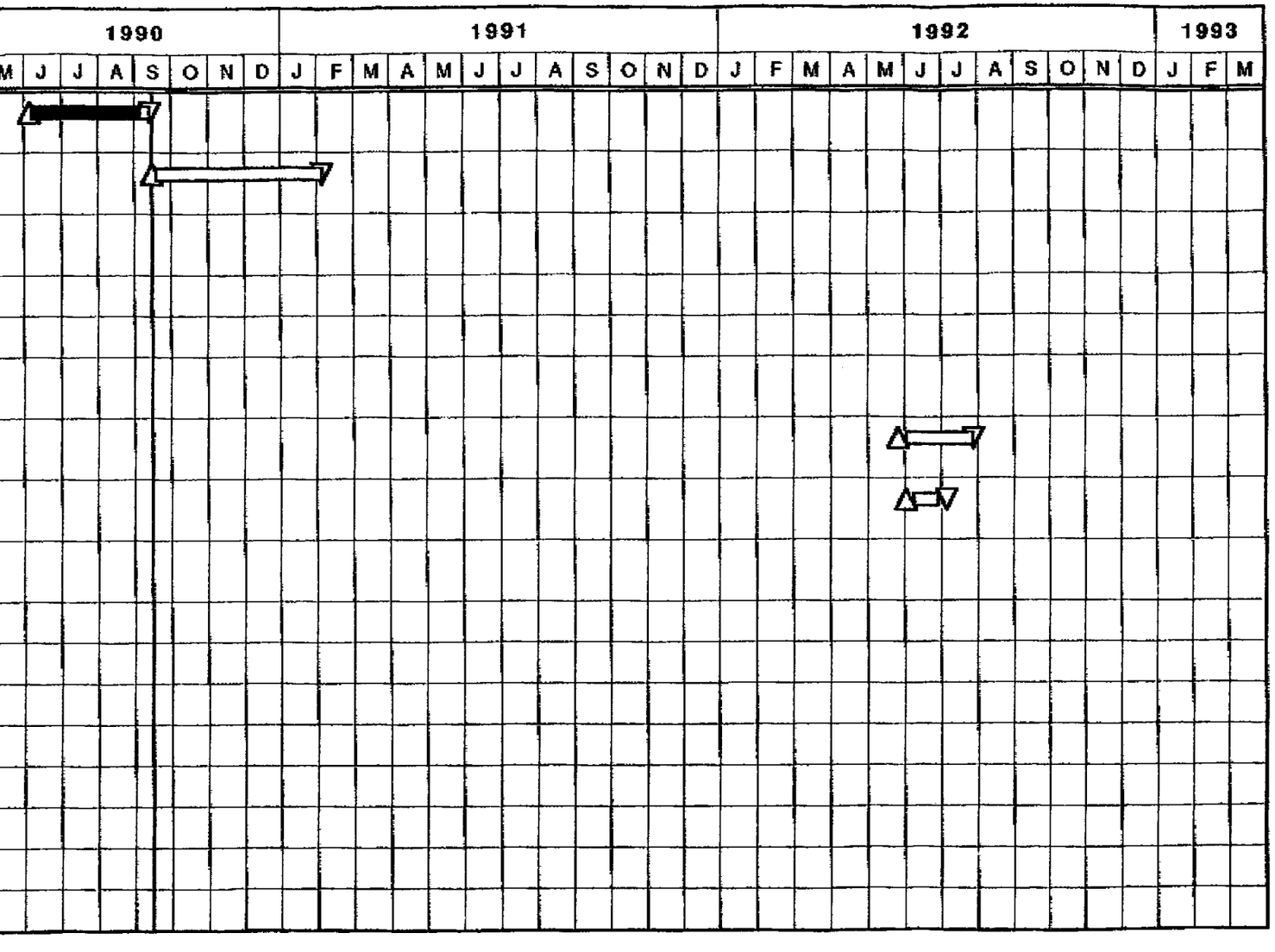

SEP 14 '90 09:29 BECHTEL - SRP INC LEA HALL P.4/4

MEMORANDUM
Westinghouse Savannah River Company

24 August 1990

CC: W. H. Martin, 703-H
J. A. Pike, 703-H

To: T. P. Gaughn, 241-120H

From: P. D. d'Entremont, 703-H, 78726

Regulatory Issues Surrounding ITP Startup

In this note I'm discussing a couple of issues related to cold runs and hot startup of ITP.

Cold Runs

Attached is a letter from J. V. Odum to J. B. Ruiter, SCDHEC, describing the facilities in the tank farm we plan to start up under interim status. As you can see, EPD is taking the position, "Unless we hear otherwise, we're planning to start these facilities up under interim status." The letter was reviewed and approved by DOE and EPD management.

This is your ticket to start ITP cold runs (which SCDHEC considers to be operation of the facility under interim status. Of course, you'll also need to document that during the cold run period you won't exceed the benzene release rate limits in the RCRA process vent regulations, effective 21 December 1990.

Benzene Abatement and Hot Startup

As we discussed last week, our new plans are to wait for approval of the wastewater permit application before hot startup. The reason for this change in strategy is that the new process vent regulations would require benzene abatement if you started up under RCRA interim status.

I want to emphasize two points relevant to this change in strategy:

- The decision to wait on permit approval introduces a new set of uncertainties in the ITP schedule. For example, although

benzene abatement is not required under wastewater regulations, SCDHEC could require benzene abatement as a permitting condition. I think it's unlikely this would prevent startup, because I feel confident we could negotiate them out of that position, but it illustrates the kind of problem we might run into. Although I can't anticipate any specifics, it's possible that SCDHEC will introduce a permitting condition that would delay startup.

- I recommend that ITP proceed with installing benzene abatement on an expeditious schedule. Although wastewater regulations don't require abatement, EPD people tell me it's quite likely that some kind of regulation will require it in the near future. Some new NESHAP regulations are being proposed that would require it. Also, air quality regulations might require it. Recent air emission regulations have shown a trend of clamping down on organics.

BCC: W/Att.
S. S. Cathey, 703-H
A. G. Chiu, 742-A
[redacted] D'Entremont, 703-H
M. D. Dukes, 742-A
W. D. Dunaway, 703-18A
K. W. Dyer, 742-A
R. G. Garvin, 703-H
M. Hawkins, 742-A
C. R. Hayes, 703-18A
G. S. Hoover, 703-41A
T. H. Killian, 703-H
J. A. Pike, 703-H
J. S. Roberts, 742-A
C. R. Sherman, 742-A
P. H. Stevens, 703-H
G. H. Street, 703-H
K. S. Wierzbicki, 703-H
K. Z. Wolf, 704-S
Central Files, 703-A

Westinghouse
Savannah River Company

P.O. Box 616
Aiken, SC 29802

ESH-FSG-900502

August 20, 1990

Mr. J. B. Ruiter, Director
Industrial & Agricultural Division
South Carolina Department of
Health and Environmental Control
2600 Bull Street
Columbia, SC 29201

Dear Mr. Ruiter:

F & H AREA HIGH LEVEL RADIOACTIVE WASTE (HLRW) TANK FARMS (U)

On June 1, 1990, a phone conference was held between SCDHEC, EPA, and DOE concerning the Federal Facilities Agreement (FFA). As a result, Nancy Weatherup requested that SRS submit a list of new tank farm facilities that are scheduled for start of construction or operational startup prior to submittal and approval of the wastewater construction permit. The attached document discusses these new facilities.

The SRS will begin construction or startup of these facilities under RCRA interim status (Part A permit application submitted 6/30/87). On one project, the H-S Inter-Area Transfer Line, initial operation will be addressed under an addendum to the DWPF wastewater permit addressing chemical cold runs. During the June 1, 1990 conference, Ms. Weatherup agreed that the start up of In-Tank Precipitation would be covered by interim status. None of the other projects were discussed.

The SRS will continue to operate the tank farms under RCRA interim status until a wastewater permit is received. At that time, the tank farms will be removed from the SRS Part A permit.

Please contact W. D. Dunaway (725-5754) should you have any questions.

Yours very truly,

J. V. Odum, Manager
Facility Support Section
Environmental Protection Department

Attachment
WDD:vcj

CC: W/Att.
S. R. Wright, 703-41A (2)
R. K. Cauthen, Lower Savannah River District
H. W. Truesdale, SCDHEC

SRS HLRW TANK FARM NEW FACILITIES STATUS

INTRODUCTION

SRS is in the process of applying for a wastewater permit from SCDHEC for the High Level Radioactive Waste (HLRW) Tank Farms. The following discussion outlines the status of new facilities that SRS plans to start construction or start up in the near future.

DISCUSSION

The F and H Area High Level Radioactive Waste (HLRW) Tank Farms have been operated subject to RCRA interim status regulations since they were included in the SRS RCRA part A permit application June 30, 1987. As a result of the FFA negotiations, SRS is required to submit a waste water permit application for the tank farms instead of a RCRA Part B application.

During the transition, Waste Management (WM) will continue to operate the tank farms under RCRA interim status until an approved wastewater permit is received from SCDHEC. At that time the tank farms will be removed from the SRS part A permit application.

Maintenance, waste removal, and sludge processing activities on the tank farms will continue as scheduled. Some maintenance activities include replacement of pumps, piping, and miscellaneous equipment. Some waste removal activities include placement of slurry pumps, addition of utility piping, and construction of slurry pump supports. Sludge processing includes batch mixing, washing, and aluminum dissolution of HLRW sludge. None of these activities will change processing of the tank farm wastes.

SRS identified four new facilities that are affected by the transition to wastewater: the New Waste Transfer Facility (HDB-8), In-Tank Precipitation (ITP), Replacement High-Level Waste Evaporator (RHLWE), and H-S Inter-Area Transfer Line (IAL). Each of these facilities will be either constructed or under construction by the time the permit is received. Table 1 details the status of each new facility. WM will continue with construction and start up of these facilities as planned under RCRA interim status until an approved wastewater permit is received. Subsequent projects would require separate permit modifications. Such projects include the Hazardous Low Level Waste Processing Tanks (HLLWPT), which is also included on Table 1.

HDB-8 is a waste transfer facility that will connect various parts of the tank farm with the H-S IAL and H-F IAL. HDB-8 consists of a diversion box, four pump pits, and associated transfer lines and equipment. No

processing will occur at HDB-8. HDB-8 is similar to other existing diversion boxes, pump pits, and transfer equipment.

ITP will process tank farm "salt solution" wastes by chemically precipitating and/or adsorbing radioactive salts, specifically cesium-137, strontium-90 and all isotopes of plutonium. The resulting precipitated solution is filtered to remove the precipitate from the remaining salt solution. The decontaminated salt solution is passed through a stripper column to remove organics prior to being transferred to Tank 50 (SCDHEC Industrial Wastewater Permit #14520). The precipitate will be transferred to the DWPF Vitrification Facility for incorporation into borosilicate glass when the facility becomes operational. The ITP process has been successfully run as a full scale demonstration in the tank farm in 1983. Of the six tanks associated with the project, four of them already contain radioactive waste.

The RHLWE will replace one existing evaporator and SRS will place another evaporator in standby mode when the RHLWE begins operation. The RHLWE consists of an entirely new evaporator facility with an improved evaporator pot, condenser, overheads tanks, and all associated transfer piping and equipment.

The H-S IAL connects the H-Area HLRW Tank Farm to the S-Area DWPF Vitrification Facility. The H-S IAL consists of four 3" stainless steel transfer lines, a Low Point Pump Pit, and an Auxiliary Pump Pit.

The HLLWPT consists of two 750,000 gal tanks and associated process equipment to process the majority of the lower level wastes in the tank farms. These tanks will allow SRS to take the Type IV tanks out of service.

Table 1
New Facilities Status Summary

Project	Complete	Operational Status	Permitting Status
HDB-8	98%	Cold Chemical runs begin 4th quarter 90 Operation begins 12/91	Included in RCRA Part A permit. Will be included with the tank farm's wastewater permit application. Operation will begin prior to permit approval.
ITP	98%	Cold Chemical runs begin 9/90 Operation begins 1st quarter 91	Included in RCRA Part A permit. Will be included with the tank farm's wastewater permit application. Operation will begin prior to wastewater permit approval.
RHLWE	0%	Construction begins 1st quarter 91 Operation begins 1994	Will be included with the tank farm's wastewater permit application. Operation will not begin prior to approved wastewater permit is received.
H-S IAL	98%	Cold Chemical runs begin 1st quarter 91 Operation begins 9/92	Included in RCRA Part A permit. Will be included with the tank farm's wastewater permit application. Included in DWPF cold runs addendum and will not start operation until addendum is approved. Normal operation will start after waste water permit approval.
HLLWPT	0%	Construction begins 3/92	Construction will not begin before wastewater permit approval. A separate permit modification will be submitted.

[6i INTER-OFFICE MEMORANDUM
INTER-OFFICE MEMORANDUM
INTER-OFFICE MEMORANDUM
INTER-OFFICE MEMORANDUM
Savannah River Site

22-Aug-1990 03:30pm

TO: DUNAWAY-WD-O7436 @A1@SLSRP1

FROM: Jeff Pike, 703-H (PIKE-JA-Y5547 AT A1 AT SSWMT1)

Tank Farm Tank Assesment for Wastewater Permit Applicationy

Dan,

ITP has created a new problem for our wastewater permit application for the tank farms. WM wants to submit the complete tank farm permit application to the SCDHEC along with a tank assesment for ITP tank systems and ask for a wastewater permit for the ITP process first. The tank assesment for the remainder of the tank farm would follow within a couple of months. We want you to help meet this objective by asking SCDHEC if they will accept this permit for review. We need to know ahead of time if SCDHEC will consider this possibility so we don't end up wasting time.

We want to submit the permit in this manner because ITP will have a difficult time meeting new RCRA regulations on the benzene emmisions along with meeting planned start up schedules. ~~The~~ Meeting the regulation would delay start up one year or more (or until a wastewater permit is granted). Cold runs will proceed as scheduled because emmisions during cold runs will be lower than the regulatory limits.

We considered pulling ITP out of the current permit application and submitting it as a seperate application. This option is impractical since we are so close to completeing the whole permit application and the rewriting would take about as much time as submitting the entire package.

We also considered just submitting the wastewater permit application and wait for the permit to be granted prior to start up. This option would still delay ITP 6 months or more.

Please call me at 7-8843 (new number) when you can to disscuss this plan. We need a response ASAP in order to avoid delaying ITP start up.

I also have the following question about the tank farm wastewater permit application:

Mike Cannon of WSRC Legal Office (?) said that WSRC should not be listed in the application as operator of the facilities. Since we remove WSRC as operator, should we remove our facility maintenance and operation acceptance certificates? I believe we should for the sake of clearity and consistancy. Nowhere else will we mention WSRC as operator nor should we

claim responsibility of the operation and maintenance if were not the operator.

INTER-OFFICE MEMORANDUM
Savannah River Site

20-Aug-1990 09:50am

TO: Bill Van Pelt, Ext. 7-1657 (VANPELT-WB-O7016)

FROM: PAUL D. D'ENTREMONT (D'ENTREMONT-PD-O5438)

RE: Wastewater Permit Strategy for ITP

Bill,

I was out of the office on Thursday and Friday, so I didn't read your message until this morning.

Here's one comment: Although it's possible we can get SCDHEC buy-in to this scheme in two weeks, we won't get written concurrence. We should plan on accepting a verbal answer.

Besides, I don't think asking for written concurrence is appropriate. All we're asking for is that they review an application. They certainly can't commit to approving it. And they'll certainly want more after they receive it -- they always ask questions and want modifications. The best that we could hope for them to say right now is, "That seems like a reasonable way to go. Send us the permit application and let us look it over, and we'll get back to you." We can't expect them to put that kind of message in writing.

CC: W. Herb Martin (MARTIN-WH-O3838)
CC: TIMOTHY P. GAUGHAN (GAUGHAN-TP-O8815)
CC: Jeff Pike, 703-H (PIKE-JA-Y5547)
CC: Remote Addressee (MILLER-RC-O9334 @A1@SZDWP1)

INTER-OFFICE MEMORANDUM
Savannah River Site

15-Aug-1990 06:18pm

TO:	Remote Addressee	(MILLER-RC-09334 @A1@SZDWP1)
TO:	PAUL D. D'ENTREMONT	(D'ENTREMONT-PD-05438)
TO:	Jeff Pike, 703-H	(PIKE-JA-Y5547)
TO:	TIMOTHY P. GAUGHAN	(GAUGHAN-TP-08815)

FROM: Bill Van Pelt, Ext. 7-1657 (VANPELT-WB-07016)

Wastewater Permit Strategy for ITP

Thanks for your attendance and input at today's meeting. In summary, we concluded that the option of choice was to expedite the submittal of the entire tank farm permit application (which includes ITP), to submit only the ITP portion of the secondary containment assessment, and to request SCDHEC to issue a permit for ITP only. The remainder of the tank assessments for the tank farm would be submitted at a later date than ITP but before 3/31/90. A separate permit for the tank farm not including ITP would then be issued.

The proposed schedule is as follows:

Task	Start	Finish	Duration
Obtain SCDHEC buy-in	8/20/90	8/31/90	2 weeks
CT Main completes application revisions	8/20/90	9/14/90	4 weeks
Containment assessment for ITP facilities	8/20/90	10/19/90	9 weeks
Submit application to DOE for review	9/17/90	11/9/90	9 weeks
Final application approval	11/12/90	11/30/90	3 weeks
Submit application to SCDHEC	12/3/90		
Obtain ITP permit from SCDHEC	12/3/90	3/29/91	17 weeks

The "To-Do" list is as follows:
1.Get written buy-in from SCDHEC to the proposed strategy - d'Entremont/Pike

2

2.Get C.T. Main committemnt to complete application and tank assessments for ITP per the proposed schedule - Pike

3.Develop and implement plan/schedule to provide adequate secondary containment for ITP hold tank area - Gaughan/Van Pelt

4.Communicate need for "A" level operators to ITP training group and and revise ITP Level 3 schedule as necessary - Miller

Please return any comments to me on all-in-one by COB Thursday 8/16. Pending any major comments, we will show the proposed schedule on Friday during our review for Lee Watkins of DOE.

CC: W. Herb Martin (MARTIN-WH-03838)

OSR 3-4A-W (Rev1-89)

WESTINGHOUSE SAVANNAH RIVER COMPANY

INTER-OFFICE MEMORANDUM

August 9, 1990

To: R. C. Miller, 241-121H
R. G. Garvin, 703-H
W. H. Martin, 703-H
W. B. Van Pelt, 241-121H
P. D. d'Entremont, 703-H

From: J. A. Pike, 703-H JP

WASTEWATER PERMITTING OPTIONS FOR ITP

Waste Management (WM) ITP is considering submitting a separate wastewater permit application for ITP in order to avoid possible start up delays. The present Federal Facilities Agreement (FFA) requires SRS to submit a wastewater permit application for the tank farms by March 31, 1991.

WM has the following options:

1. Complete the entire tank farm permit application and submit it to SCDHEC per original schedule.
2. Complete the entire tank farm permit application ASAP and ask SCDHEC to issue an ITP permit on a priorty basis.
3. Prepare a separate ITP permit application and delay the full tank farm permit.

Table 1 shows a schedule for completing an ITP permit ASAP. Figure 1 represents the schedule graphically relative to the current wastewater permit schedule and the impact a separate ITP permit would have on that schedule. The delay could cause SRS to miss the March 31, 1991 deadline agreed to in the FFA.

In order for the schedule in Table 1 to be meet, the following timing commitments must be meet:

Review from WM and Environmental Protection Division (EPD) within 2 weeks
Review from DOE-SR and headquarters within 3 weeks
A tank assessment of ITP process tanks to be completed at the same time

Both Jeff Pike and Paul d'Entremont to work full time on this single issue (22 man weeks)

Part time assistance from a WM secretary and WMWE draftsman (3 man weeks)

ITP personnel would provide a professional engineer (PE) to stamp the permit application and participate in the review cycle

ITP personnel provide part time assistance of Tim Gaughan (2 man weeks)

In spite of our heroic actions, approval still would rest with SCDHEC. Work needs to begin by August 20 in order to submit an application the first week of November. SCDHEC would need to be receiptive and respond very rapidly (6-8 weeks) in order to obtain a permit by December. However, SRS experience with SCDHEC show that a quick response is unlikely. For example, DWPF Vitrification Facility permit application is similar in length and detail to an ITP permit application, but the ITP application would have about 1/3 the specifications, calculations, and drawings. SCDHEC took more than 4 months to return comments and questions for the DWPF Vitrification Facility permit application despite requesting SCDHEC to put it on a priority basis. Currently, DWPF personnel are finalizing answers to SCDHEC's comments. By requesting SCDHEC to issue the ITP permit on an emegency basis, WM can ensure SCDHEC will respond quickly. This request would delay other permits around SRS including permits for the reactor restart program. SRS managment is unlikely to accept delays in these programs in order to avoid complying with a RCRA regulation.

WM losses several advantages if WM prepares and submits an ITP permit. Including ITP as part of the entire tank farm lowers the emphasis on this relatively new process. As a separate permit SCDHEC is more likely to "nit pick" on smaller details about ITP. Also, the entire tank farm permit will not contain any "W" drawings because SRS will take the position that it is a proven facility (additionally we don't have as-built drawings anyone is willing to commit to). WM will need to submit "W" drawings or make additional drawings with minimal details to submit to SCDHEC.

Table 1

Separate ITP Wastewater Permit Application Preparation Schedule

3 weeks	Creation of first draft
2 weeks	Review of first draft (WM and EPD)
1 to 2 weeks	Creation of second draft
3 weeks	Review of second draft (DOE-SR and HQ, WM, & EPD)
1 week	Creation of final draft and circulate for signatures
11 weeks	Total time required for application preparation

ITP Schedules vs. Waste Water Permit Schedule

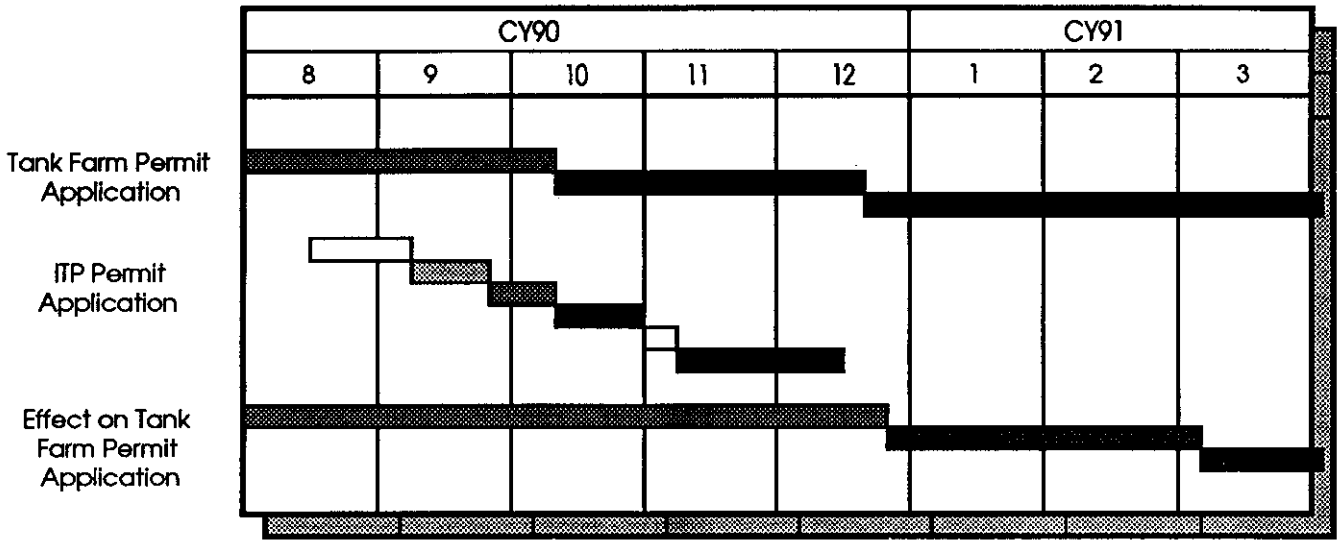

- First Draft Preparations
- First Draft Application Review (WM and EPD)
- Second Draft Application Completed
- Second Draft Application Review (DOE-SR & HQ, WM and EPD)
- Final Draft preparation and Approvals
- Application submitted to SCDHEC for Final Appoval

Drawn August 8, 1990
by J. A. Pike, WMT

LU-0517

August 7, 1990

TO: Danny Dunaway, Manager
Permitting Field Support Section
WSRC Environmental Protection Department

SR CONDITIONAL CONCURRENCE ON SENDING WSRC LETTER TO SCDHEC REGARDING PERMITTING FOR F- AND H-AREA TANK FARMS

Attached for your use is a copy of the subject conditional concurrence. WSRC may transmit the letter to the SCDHEC after incorporating the SR comments.

Gary S. Hoover

Gary S. Hoover
SR-Environmental Division
(x5-3968)

Attachment

cc w/attach:
G. S. Hoover, ED
File

2

A055624

Please obtain SR concurrence —
We would like to send this week.
RK,
Danny D. 7/24

ESH-FSG-900399

July 24, 1990

Mr. J. B. Ruiter, Director
Industrial & Agricultural Division
South Carolina Department of
Health and Environmental Control
2600 Bull Street
Columbia, SC 29201

Dear Mr. Ruiter:

F & H AREA HIGH LEVEL RADIOACTIVE WASTE (HLRW) TANK FARMS (U)

On June 1, 1990, a phone conference was held between SCDHEC, EPA, and DOE concerning the Federal Facilities Agreement (FFA). As a result, Nancy Weatherup requested that SRS submit a list of new tank farm facilities that are scheduled for start of construction or operational startup prior to submittal and approval of the wastewater construction permit. The attached document discusses these new facilites.

The SRS will begin construction or startup of these facilities under RCRA interim status (Part A permit application submitted 6/30/87). On one project, the H-S Inter-Area Transfer Line, initial operation will be addressed under an addendum to the DWPF wastewater permit addressing chemical cold runs. During the June 1, 1990 conference, Ms. Weatherup agreed that the start up of In-Tank Precipitation would be covered by interim status. None of the other projects were discussed.

The SRS will continue to operate the tank farms under RCRA interim status until a wastewater permit is received. At that time, the tank farms will be removed from the SRS Part A permit.

Please contact W. D. Dunaway (725-5754) should you have any questions.

Yours very truly,

J. V. Odum, Manager
Facility Support Section
Environmental Protection Department

cc: W/Att.
S. R. Wright, 703-41A (2)
R. K. Cauthen, Lower Savannah River District
H. W. Truesdale, SCDHEC

GSH
ECB
ED
07/24/90

CONCURRENCES
TG SYMBOL ED
INITIALS/SIG GSH
DATE 07/24/90
TG SYMBOL ED
INITIALS/SIG RLP
DATE 07/24/90
TG SYMBOL ED
INITIALS/SIG SRW
DATE 07/25/90
TG SYMBOL OCC
INITIALS/SIG
DATE 7/26/90
TG SYMBOL HLW
INITIALS/SIG
DATE 7/ /90
TG SYMBOL
INITIALS/SIG
DATE
TG SYMBOL
INITIALS/SIG
DATE
TG SYMBOL
INITIALS/SIG
DATE
TG SYMBOL
INITIALS/SIG

A055976 3

..ted States Government **Department of Energy**

memorandum

AUG 0

DATE: AUG 03 1990

REPLY TO: HLWF(Wheeler/7-78006)
ATTN OF:

SUBJECT: F and H Area HLRW Tank Farms

TO: S. R. Wright, Director
Environmental Division

The High Level Waste Division is granting conditional concurrence to the above referenced memorandum contingent upon the following revisions:

- Deletion: page 2, paragraph 2, last sentence (.... add new chemicals to the tank farms)
- Deletion: page 2, paragraph 5, fourth sentence (none of these projects introduces any new chemicals into the tank farm).
- Table 1, should be updated to reflect current operational status since the dates for HDB-8 and ITP have either expired or changed.

Both of the deletions are requested due to our understanding that SCDHEC is only interested in obtaining a list of the new tank farm facilities that are scheduled for construction or operation prior to submittal and approval of the wastewater construction permit. The above items could confuse the issue and are not requested at this time.

Any questions or comments you or your staff may have may be directed to V.B.Wheeler, extension 7-8006.

A. L. Watkins, Director
High Level Waste Division

HLWF:VBW:rk

cc: C.E. Anderson, SR
K. E. Thames, SR
J. A. Pike, WSRC

Westinghouse
Savannah River Company

P.O. Box 616
Aiken, SC 29802

ESH-FSG-900502

July 25, 1990

Mr. J. B. Ruiter, Director
Industrial & Agricultural Division
South Carolina Department of
Health and Environmental Control
2600 Bull Street
Columbia, SC 29201

Dear Mr. Ruiter:

F & H AREA HIGH LEVEL RADIOACTIVE WASTE (HLRW) TANK FARMS (U)

On June 1, 1990, a phone conference was held between SCDHEC, EPA, and DOE concerning the Federal Facilities Agreement (FFA). As a result, Nancy Weatherup requested that SRS submit a list of new tank farm facilities that are scheduled for start of construction or operational startup prior to submittal and approval of the wastewater construction permit. The attached document discusses these new facilities.

The SRS will begin construction or startup of these facilities under RCRA interim status (Part A permit application submitted 6/30/87). On one project, the H-S Inter-Area Transfer Line, initial operation will be addressed under an addendum to the DWPF wastewater permit addressing chemical cold runs. During the June 1, 1990 conference, Ms. Weatherup agreed that the start up of In-Tank Precipitation would be covered by interim status. None of the other projects were discussed.

The SRS will continue to operate the tank farms under RCRA interim status until a wastewater permit is received. At that time, the tank farms will be removed from the SRS Part A permit.

Please contact W. D. Dunaway (725-5754) should you have any questions.

Yours very truly,

J. V. Odum, Manager
Facility Support Section
Environmental Protection Department

Attachment
WDD:vcj

CC: W/Att.
S. R. Wright, 703-41A (2)
R. K. Cauthen, Lower Savannah River District
H. W. Truesdale, SCDHEC

BCC: W/Att.
S. S. Cathey, 703-H
A. G. Chiu, 742-A
P. D. D'Entremont, 703-H
M. D. Dukes, 742-A
W. D. Dunaway, 703-18A
K. W. Dyer, 742-A
R. G. Garvin, 703-H
M. Hawkins, 742-A
C. R. Hayes, 703-18A
G. S. Hoover, 703-41A
T. H. Killian, 703-H
J. A. Pike, 703-H
J. S. Roberts, 742-A
C. R. Sherman, 742-A
P. H. Stevens, 703-H
G. H. Street, 703-H
K. S. Wierzbicki, 703-H
K. Z. Wolf, 704-S
Central Files, 703-A

SRS HLRW TANK FARM NEW FACILITIES STATUS

INTRODUCTION

SRS is in the process of applying for a wastewater permit from SCDHEC for the High Level Radioactive Waste (HLRW) Tank Farms. The following discussion outlines the status of new facilities that SRS plans to start construction or start up in the near future.

DISCUSSION

The F and H Area High Level Radioactive Waste (HLRW) Tank Farms have been operated subject to RCRA interim status regulations since they were included in the SRS RCRA part A permit application June 30, 1987. As a result of the FFA negotiations, SRS is required to submit a waste water permit application for the tank farms instead of a RCRA Part B application.

During the transition, Waste Management (WM) will continue to operate the tank farms under RCRA interim status until an approved wastewater permit is received from SCDHEC. At that time the tank farms will be removed from the SRS part A permit application.

Maintenance, waste removal, and sludge processing activities on the tank farms will continue as scheduled. Some maintenance activities include replacement of pumps, piping, and miscellaneous equipment. Some waste removal activities include placement of slurry pumps, addition of utility piping, and construction of slurry pump supports. Sludge processing includes batch mixing, washing, and aluminum dissolution of HLRW sludge. None of these activities will change processing of the tank farm wastes or add new chemicals to the tank farm.

SRS identified four new facilities that are affected by the transition to wastewater: the New Waste Transfer Facility (HDB-8), In-Tank Precipitation (ITP), Replacement High-Level Waste Evaporator (RHLWE), and H-S Inter-Area Transfer Line (IAL). Each of these facilities will be either constructed or under construction by the time the permit is received. Table 1 details the status of each new facility. None of these projects introduces any new chemicals into the tank farm. WM will continue with construction and start up of these facilities as planned under RCRA interim status until an approved wastewater permit is received. Subsequent projects would require separate permit modifications. Such projects include the Hazardous Low Level Waste Processing Tanks (HLLWPT), which is also included on Table 1.

HDB-8 is a waste transfer facility that will connect various parts of the tank farm with the H-S IAL and H-F IAL. HDB-8 consists of a diversion box, four pump pits, and associated transfer lines and equipment. No

processing will occur at HDB-8. HDB-8 is similar to other existing diversion boxes, pump pits, and transfer equipment.

ITP will process tank farm "salt solution" wastes by chemically precipitating and/or adsorbing radioactive salts, specifically cesium-137, strontium-90 and all isotopes of plutonium. The resulting precipitated solution is filtered to remove the precipitate from the remaining salt solution. The decontaminated salt solution is passed through a stripper column to remove organics prior to being transferred to Tank 50 (SCDHEC Industrial Wastewater Permit #14520). The precipitate will be transferred to the DWPF Vitrification Facility for incorporation into borosilicate glass when the facility becomes operational. The ITP process has been successfully run as a full scale demonstration in the tank farm in 1983. Of the six tanks associated with the project, four of them already contain radioactive waste.

The RHLWE will replace one existing evaporator and SRS will place another evaporator in standby mode when the RHLWE begins operation. The RHLWE consists of an entirely new evaporator facility with an improved evaporator pot, condenser, overheads tanks, and all associated transfer piping and equipment.

The H-S IAL connects the H-Area HLRW Tank Farm to the S-Area DWPF Vitrification Facility. The H-S IAL consists of four 3" stainless steel transfer lines, a Low Point Pump Pit, and an Auxiliary Pump Pit.

The HLLWPT consists of two 750,000 gal tanks and associated process equipment to process the majority of the lower level wastes in the tank farms. These tanks will allow SRS to take the Type IV tanks out of service.

Table 1
New Facilities Status Summary

Project	Complete	Operational Status	Permitting Status
HDB-8	98%	Cold Chemical runs begin 7/90 Operation begins 12/91	Included in RCRA Part A permit. Will be included with the tank farm's wastewater permit application. Operation will begin prior to permit approval.
ITP	98%	Cold Chemical runs begin 9/90 Operation begins 1st quarter 91	Included in RCRA Part A permit. Will be included with the tank farm's wastewater permit application. Operation will begin prior to wastewater permit approval.
RHLWE	0%	Construction begins 1st quarter 91 Operation begins 1994	Will be included with the tank farm's wastewater permit application. Operation will not begin prior to approved wastewater permit is received.
H-S IAL	98%	Cold Chemical runs begin 1st quarter 91 Operation begins 9/92	Included in RCRA Part A permit. Will be included with the tank farm's wastewater permit application. Included in DWPF cold runs addendum and will not start operation until addendum is approved. Normal operation will start after waste water permit approval.
HLLWPT	0%	Construction begins 3/92	Construction will not begin before wastewater permit approval. A separate permit modification will be submitted.

OSR 3-4A-W (Rev 1-89)

WESTINGHOUSE SAVANNAH RIVER COMPANY

INTER-OFFICE MEMORANDUM

July 18, 1990

To: R. W. Wilson, 703-H
H. H. Rowland, 703-H
L. C. Thomas, 703-F
G. E. Baynham, 241-28H
N. R. Davis, 241-120H
B. E. Long, 241-120H
R. E. Meador, 241-82H
M. A. Ceravolo, 703-H
E. W. Manci, 703-F
W. B. Van Pelt, 241-121H
R. A. Scaggs, 703-H
G. H. Street, 703-H
T. H. Killian, 703-H
W. D. Dunaway, 703-18A

From: J. A. Pike, 703-H JP

TANK FARM WASTEWATER PERMIT APPLICATION: PROCESS FLOW DRAWINGS REVIEW

Attached are full size Waste Transfer System Process Flow Diagram drawings, a table of specifications for each line, and drawings of specific facilities. As you know, SRS will submit a wastewater permit application to SCDHEC for the F and H Area Tank Farms later this year. Please review the attached drawings that pertain to your area of responsibility or appoint a delegate to review it for you. Return comments to J. A. Pike (703-H, 78982) by August 1, 1990.

It is important to do a thorough review of these drawings because SCDHEC can limit use of any process lines or other important facility if excluded from the application and these drawings. In addition, SRS will need to submit permit modifications to permit the use of "missing" facilities. Therefore, we need to include all existing facilities and all facilities associated with the following projects: ITP, New Waste Transfer Facility (HDB-8 and H-S IAL), Replacement High Level Waste Evaporator, and any current waste removal projects that are modifying or adding process piping.

CC: G. T. Wright, 703-H (No Attachments)
S. S. Cathey, 703-H (No Attachments)
R. G. Garvin, 703-H (No Attachments)
W. H. Martin, 703-H (No Attachments)
P. D. d'Entremont, 703-H
S. E. Crook, 703-H
S. D. Thomas, 703-H (No Attachments)
W. D. Conner, 704-37S
V. V. Wheeler, 704-43S
J. V. Odum, 703-A (No Attachments)
M. Hawkins, 703-A

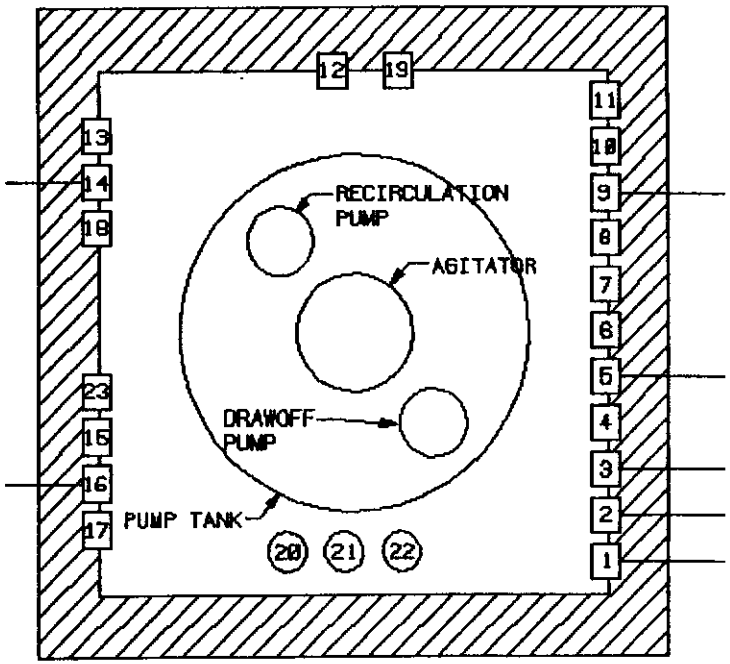

LEGEND

☐ HORIZONTAL NOZZLE

○ VERTICAL NOZZLE

NOZZLE NUMBER	CURRENT USE
1.	TO DRAWOFF LOOP (TANKS 33-34)
2.	TO DRAWOFF LOOP (TANKS 1-4)
3.	FROM DRAWOFF LOOP (TANKS 33-34)
5.	FROM DRAWOFF LOOP (TANKS 1-4)
9.	SPARE
14.	BACKUP TRANSFER LINE TO TANK 18 INSTRUMENT AIR, WATER & VENT
16.	WASTE CONCENTRATE FROM 242-F EVAPORATOR

NOTE: OTHER NOZZLES FOR INSTRUMENTATION, COOLING, STEAM, ECT.

DRAFT

CAD NO.	TITLE:	NO SCALE
SE5-2-2006185	242-3F PUMP PIT (F-CTS)	6000-44-3190W

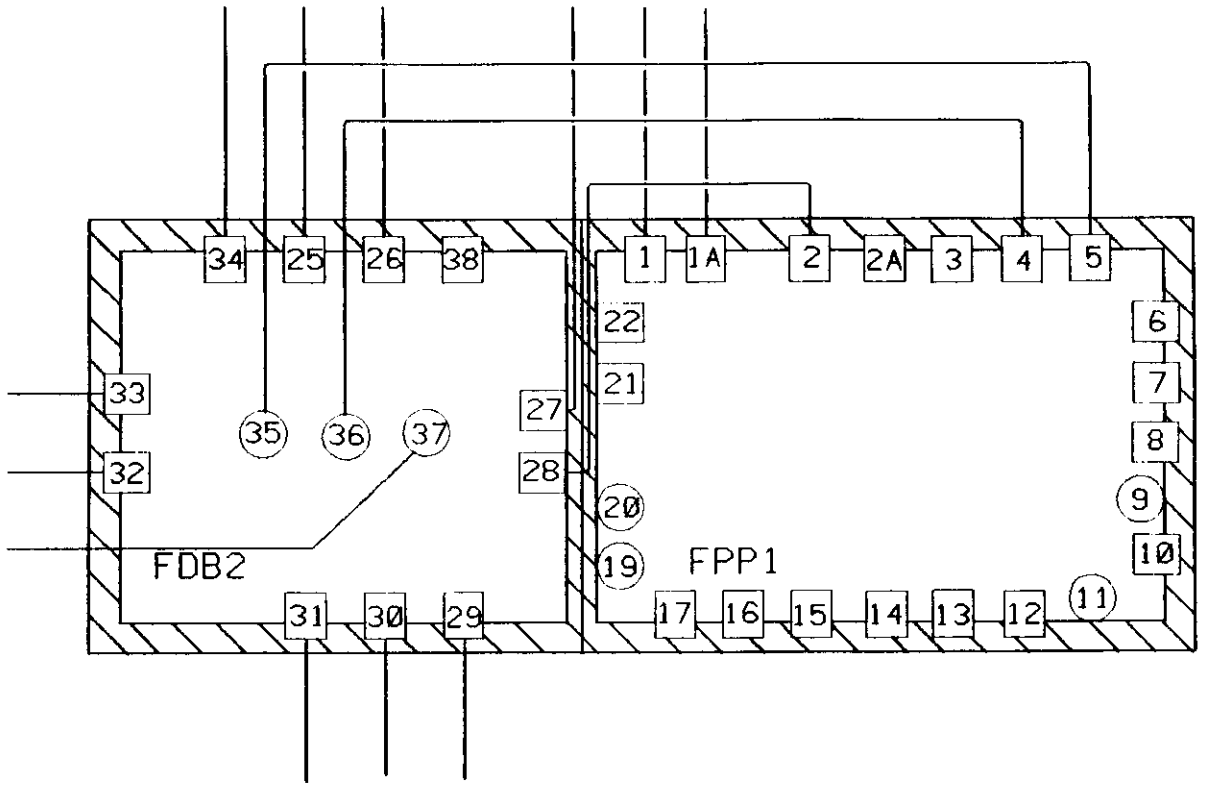

LEGEND

□ HORIZONTAL NOZZLE

○ VERTICAL NOZZLE

	NOZZLE NUMBER	CURRENT USE
FDBZ	25.	TO FPP
	26.	FR FPP
	27.	TO FDB
	28.	TO FPP1
	29.	TO FDB3
	30.	TO FDB3
	31.	FR TK7
	32.	TO/FR FDB3
	33.	TO TK18
	34.	SPARE
	35.	TO FPP1
	36.	TO FPP1
	37.	TO TK7
FPP1	1.	FR FDB1
	1A.	FR FDB1
	2.	FR FDB2
	4.	FR FDB2
	5.	FR FDB2

DRAFT

CAD NO.	TITLE:	NO SCALE
SE5-2-2017712	FDB2	6000-44-3190W

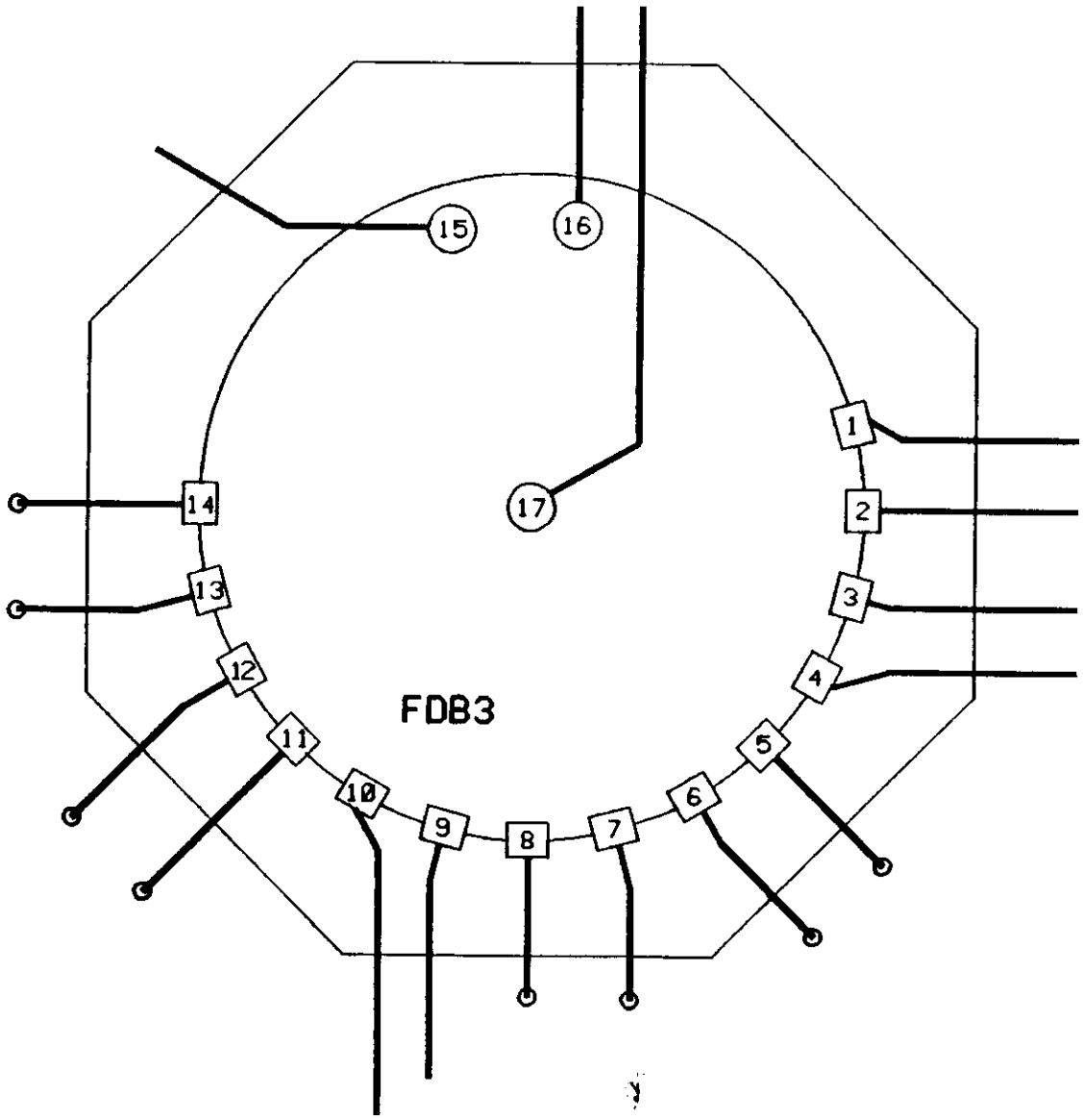

LEGEND

□ HORIZONTAL NOZZLE

○ VERTICAL NOZZLE

NOZZLE NUMBER	CURRENT USE
1.	TO TANK 34
2.	FROM TANK 34
3.	TO TANK 33
4.	FROM TANK 33
5.	SPARE
6.	SPARE
7.	SPARE
8.	SPARE
9.	FROM FDB4
10.	TO FDB4
11.	SPARE
12.	SPARE
13.	SPARE
14.	SPARE
15.	TO/FROM FDB2
16.	FROM FDB2
17.	TO FDB2

DRAFT

CAD NO.	TITLE:	
SE5-2-2006188	FIGURE ZN DIVERSION BOX FDB3 LAYOUT	NO SCALE 6000-44-3190W

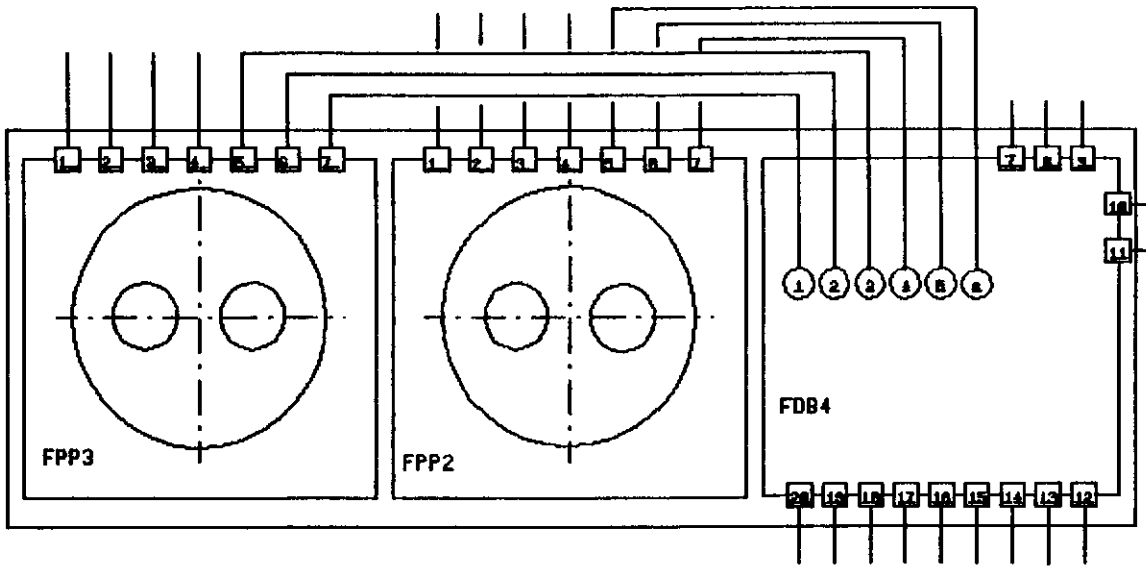

LEGEND

□ HORIZONTAL NOZZLE

○ VERTICAL NOZZLE

	NOZZLE NUMBER	CURRENT USE
FPP3	1.	FROM FDB1
	2.	FROM FDB1
	3.	FROM FDB6
	4.	DEMISTER & CONDENSER DRAIN
	5.	TO FDB4
	6.	TO FDB4
	7.	TO FDB4
FPP2	1.	FROM FDB1
	2.	FROM FDB1
	3.	FROM FDB5
	4.	WASTE LINE DRAIN
FDB4	1.	TRANS. JET FR.FPP3
	2.	PUMP INLET FR.FPP3
	3.	PUMP OUTLET FR.FPP3
	4.	TRANS. JET FR.FPP2
	5.	PUMP INLET FR.FPP2
	6.	PUMP OUTLET FR.FPP2
	7.	TO FDB2
	8.	FROM FDB3
	9.	TO FDB3
	10.	TO TANK 28

NOZZLE NUMBER	CURRENT USE
18.	TO TANK 46
19.	TO TANK 45
20.	TO TANK 44

NOZZLE NUMBER	CURRENT USE
11.	TO TANK 27
12.	TO TANK 26
13.	FROM TANK 26
14.	SPARE
15.	SPARE
16.	TO TANK 25
17.	TO TANK 47

CAD NO.	TITLE:	NO SCALE
SE5-2-2006185	FIGURE 20 DIVERSION BOX FDB4 LAYOUT	6000-44-3190W

DRAFT

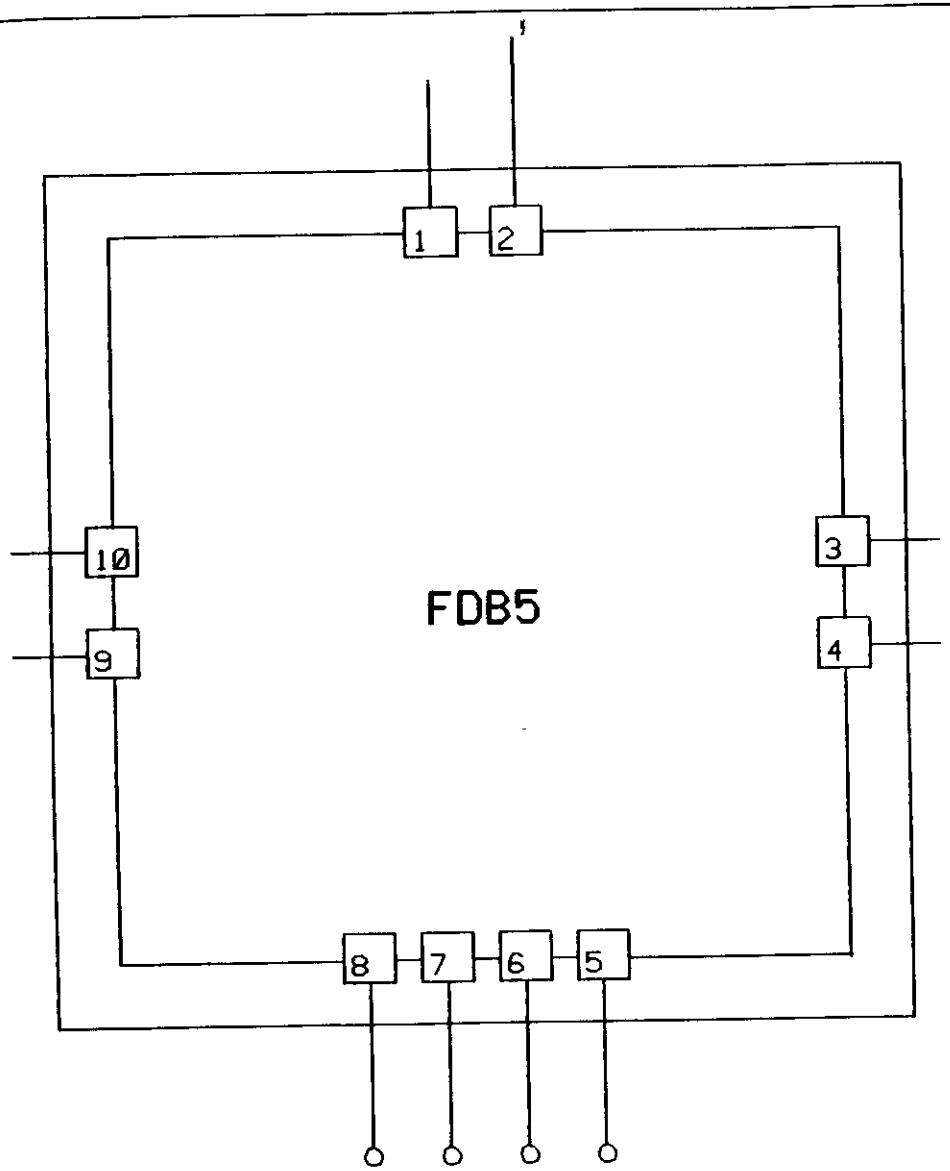

LEGEND

□ HORIZONTAL NOZZLE

○ VERTICAL NOZZLE

NOZZLE NUMBER	CURRENT USE
1.	FROM CTS TANK (242-3F)
2.	TO CTS TANK (242-3F)
3.	FROM TANK 33
4.	TO TANK 33/34
5.	SPARE
6.	SPARE
7.	SPARE
8.	SPARE
9.	FROM TANK 28
10.	TO TANK 25

DRAFT

CAD NO.	TITLE:	NO SCALE
SE5-2-2006188	FIGURE ZP DIVERSION BOX FDB5 LAYOUT	6000-44-3190W

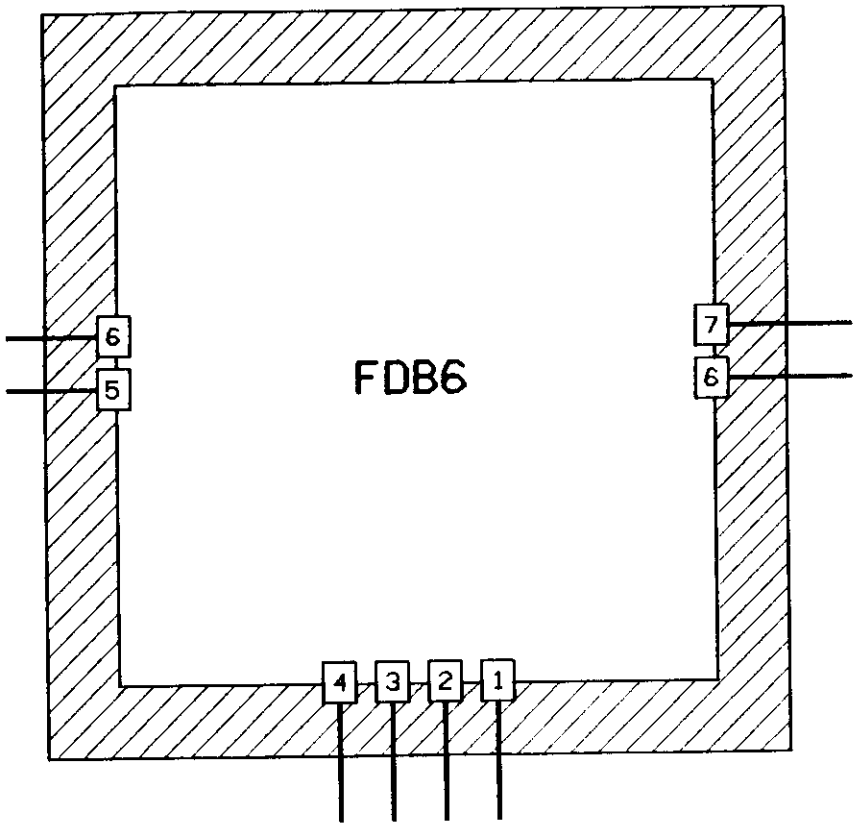

LEGEND

HORIZONTAL NOZZLE

VERTICAL NOZZLE

NOZZLE NUMBER	CURRENT USE
1.	FROM TANK 7
2.	WASTE VENT TO TANK 7
3.	WASTE VENT TO FPP3
4.	FROM TANK 26
5.	WASTE VENT FROM EVAPORATOR 242-F
6.	TO EVAPORATOR 242-F
7.	SPARE
8.	SPARE

DRAFT

CAD NO.	TITLE:	NO SCALE
SE5-2-2006185	DIVERSION BOX FDB6 LAYOUT	6000-44-3190W

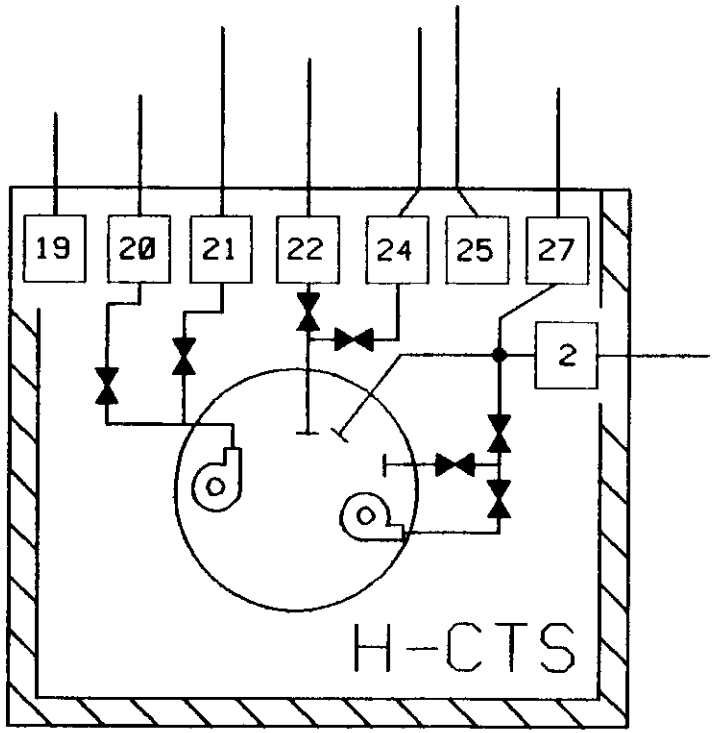

LEGEND

□ HORIZONTAL NOZZLE

○ VERTICAL NOZZLE

NOZZLE NUMBER	CURRENT USE
2.	FR. EVAP 1H
19.	SPARE
20.	TO TKS 35,36,37
21.	TO TKS 29,30,31,32
22.	FR.TKS 35,36,37
24.	FR.TKS 29,30,31,32
25.	VENT TO TK.29
27.	PUMP-OUT TO TK.29

DRAFT

CAD NO.	TITLE:	NO SCALE
SE5-2-2017712	H-CTS	6000-44-3190W

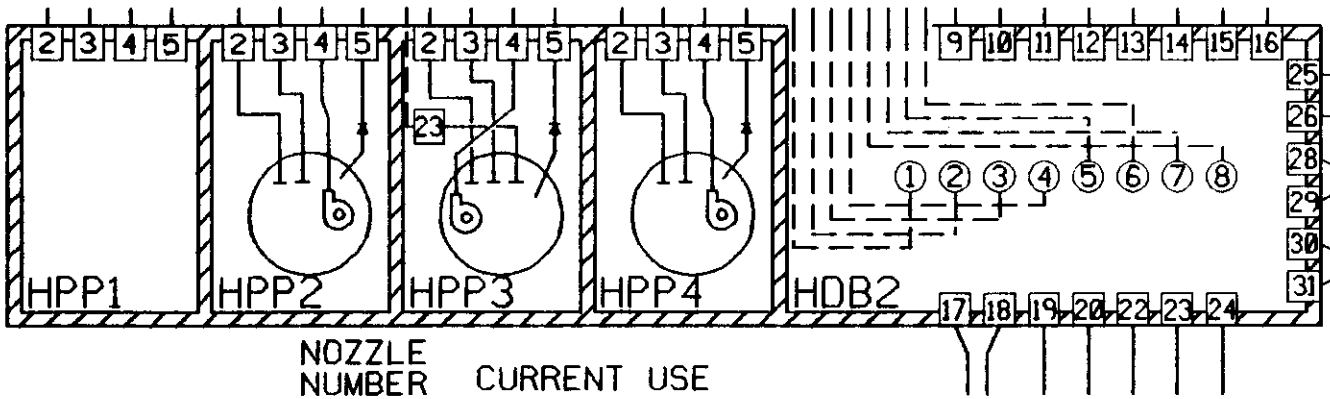

LEGEND

- □ HORIZONTAL NOZZLE
- ○ VERTICAL NOZZLE

	NOZZLE NUMBER	CURRENT USE
HDB2	1.	FR. HPP #4 (ABDN)
	2.	FR. HPP #4
	3.	FR. HPP #2
	4.	FR. HPP #2
	5.	FR. HPP #3
	6.	FR. HPP #3
	7.	TO HPP #3
	8.	FR. HPP #1
	9.	TO TK.14
	10.	TO TK.14
	11.	TO TK.16
	12.	TO TK.16
	13.	TO TK.15
	14.	TO TK.15
	15.	TO TK.13
	16.	TO TK.13
	17.	TO HDB4
	18.	TO HDB4
	19.	TO HDB5
	20.	TO HDB5
	22.	FR. TK. 13/TO TK. 21
	23.	FR. FDB2
	24.	TO FDB2

	NOZZLE NUMBER	CURRENT USE
HPP2	2.	TO HDB1
	3.	TO HDB1
	4.	TO HDB2
	5.	TO HDB2
HPP3	2.	TO HDB1
	3.	TO HDB1
	4.	TO HDB2
	5.	FR.HDB2
HPP4	2.	TO HDB1
	3.	TO HDB1
	4.	TO HDB2
	5.	TO HDB2

	NOZZLE NUMBER	CURRENT USE
HDB2	25.	FR. TK. 11
	26.	FR. TK. 12
	28.	TO HD87
	29.	FR. HD87
	30.	TO HDB7
	31.	TO HDB7
HPP1	2.	TO HDB1
	3.	TO HDB1
	4.	SPARE
	5.	TO HDB2

CAD NO.	TITLE:	NO SCALE
SE5-2-2017711	HDB2	6000-44-3190W

DRAFT

D. JOHNSON - SP CHARGE 6000-44-3190W

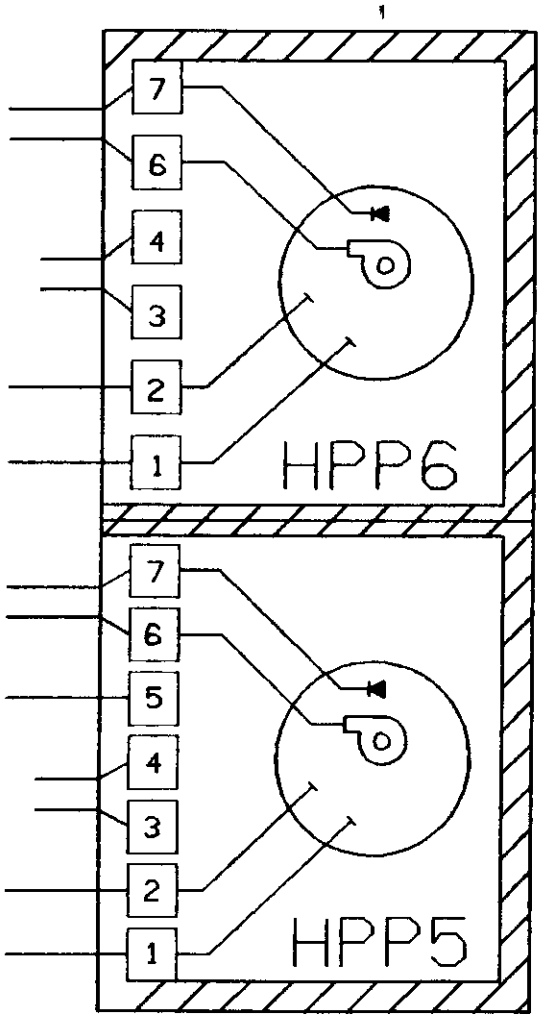

LEGEND

□ HORIZONTAL NOZZLE

○ VERTICAL NOZZLE

NOZZLE NUMBER		CURRENT USE
HPP5	1.	*FROM 1 & 2 FROM SEPARATIONS CANYONS &
	2.	299-H (ONE HEADER IN USE,ONE SPARE)
	3.	SPARE
	4.	SPARE
	5.	SPARE
	6.	TO HDB7
	7.	TO HDB7
HPP6	1.	*FROM 1 & 2 FROM SEPARATIONS CANYONS &
	2.	299-H (ONE HEADER IN USE,ONE SPARE)
	3.	SPARE
	4.	SPARE
	6.	TO HDB7
	7.	TO HDB7

DRAFT

CAD NO.	TITLE:	NO SCALE
SE5-2-2017712	HPP6 HPP5	6000-44-3190W

D. JOHNSON - SP CHARGE 6000-44-3190W

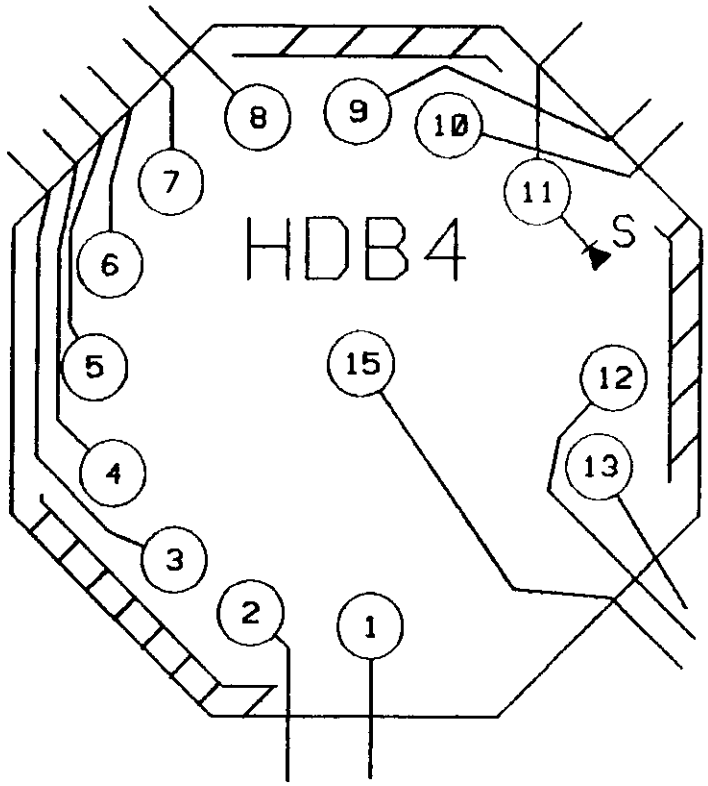

LEGEND

□ HORIZONTAL NOZZLE

○ VERTICAL NOZZLE

NOZZLE NUMBER	CURRENT USE
1.	SPARE
2.	TO HDB6
3.	FR.TK.32
4.	TO TK.32
5.	FR.TK.31
6.	TO TK.31
7.	FR.TK.30
8.	TO TK.30
9.	FR.TK.29
10.	TO TK.29
11.	SUMP TO TK.29
12.	FR.HDB5
13.	FR.HDB2
15.	FR.HDB2

DRAFT

CAD NO.	TITLE:	NO SCALE
SE5-2-2017711	HDB4	6000-44-3190W

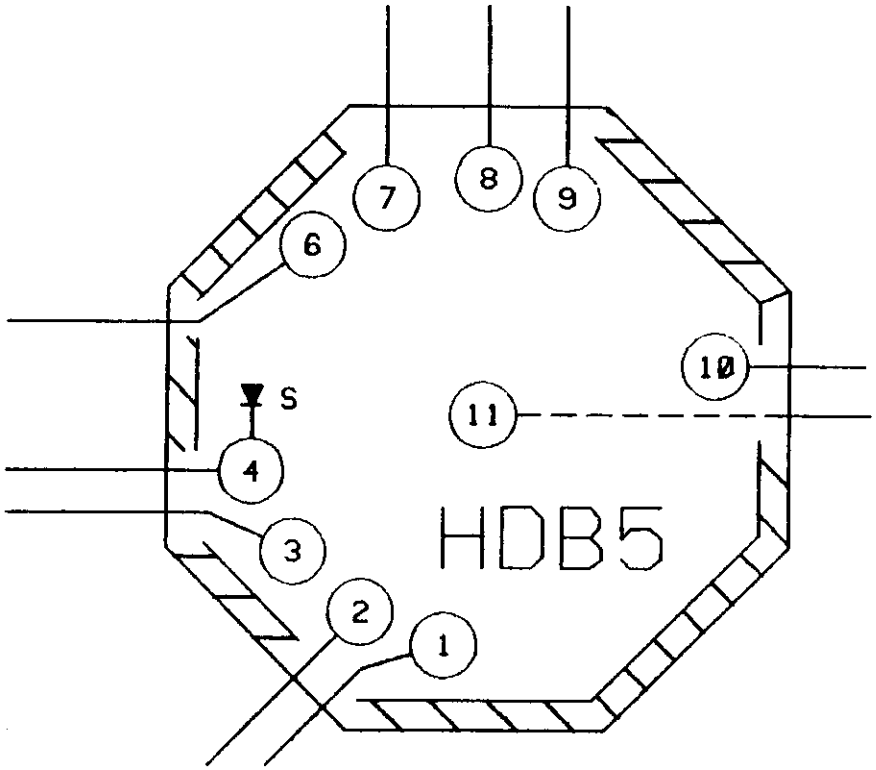

LEGEND

☐ HORIZONTAL NOZZLE

○ VERTICAL NOZZLE

NOZZLE NUMBER	CURRENT USE
1.	SPARE
2.	SPARE
3.	TO TK.22
4.	TO TK.21
6.	TO TK.21
7.	TO TK.23
8.	TO TK.24
9.	TO HDB4
10.	TO HDB2
11.	TO HDB2

DRAFT

CAD NO.	TITLE:	
SE5-2-2017711	HDB5	NO SCALE 6000-44-3190W

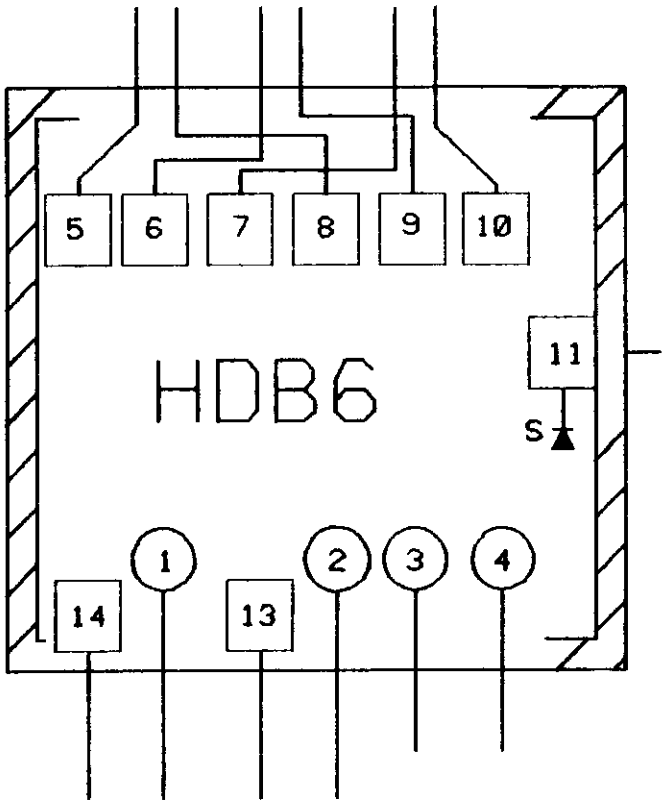

LEGEND

□ HORIZONTAL NOZZLE

○ VERTICAL NOZZLE

NOZZLE NUMBER	CURRENT USE
1.	TO TK.13
2.	FR.HDB2
3.	SPARE
4.	SPARE
5.	FR.TK.35
6.	FR.TK.36
7.	TO TK.37
8.	TO TK.35
9.	TO TK.36
10.	FR.TK.37
11.	SUMP TO TK.35
13.	FR.HDB4
14.	SPARE

DRAFT

CAD NO.	TITLE:	NO SCALE
SE5-2-2017711	HDB6	6000-44-3190W

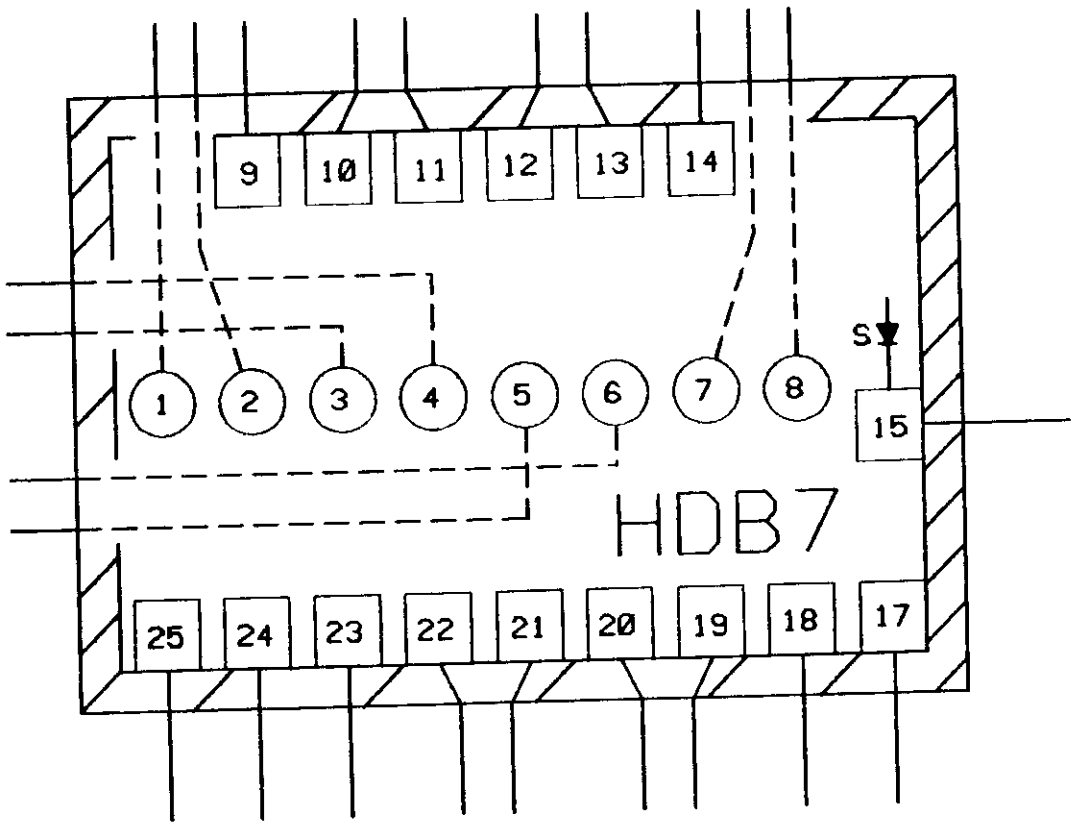

LEGEND

□ HORIZONTAL NOZZLE

○ VERTICAL NOZZLE

	NOZZLE NUMBER	CURRENT USE
HDB7	1.	FR.HPP6
	2.	FR.HPP6
	3.	TO HDB2
	4.	FR.HDB2
	5.	FR.HDB2
	6.	TO HDB2
	7.	FR.HPP5
	8.	FR.HPP5
	9.	SPARE
	10.	FR.TK.43
	11.	TO TK.43
	12.	TO TK.41
	13.	TO TK.40
	14.	TO TK.39
	15.	SUMP TO TK.38
	17.	TO TK.38
	18.	TO TK.42
	19.	TO TK.48
	20.	TO TK.49
	21.	TO TK.50
	22.	TO TK.51
	23.	SPARE
	24.	SPARE
	25.	SPARE

DRAFT

CAD NO.	TITLE:	NO SCALE
SE5-2-2017711	HDB7	6000-44-3190W

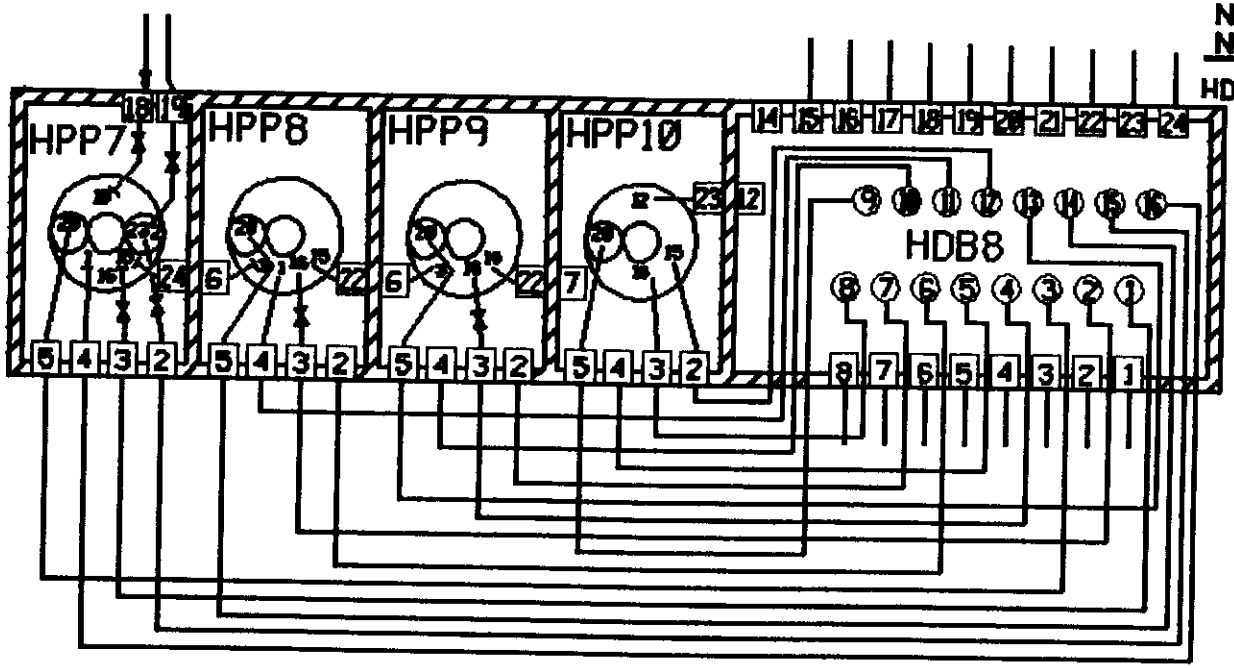

LEGEND

□ HORIZONTAL NOZZLE

○ VERTICAL NOZZLE

	NOZZLE NUMBER	CURRENT USE
HDB8	1.	FR.TK.43
	2.	FR. HDB7
	3.	FR. HDB7
	4.	FR. HDB7
	5.	SPARE
	6.	SPARE
	7.	SPARE
	8.	FR.AUX.PUMP PIT
	14.	SPARE
	15.	FR.HDB7
	16.	TO HDB7
	17.	TO/FR.HDB5
	18.	SPARE(TO/FR.HDB5)
	19.	SPARE
	20.	TO HDB6
	21.	TO HDB6
	22.	SPARE
	23.	SPARE
	24.	SPARE
HPP7	2.	——
	3.	——
	4.	——
	5.	——

NOZZLE NUMBER	CURRENT USE
HPP9	NO DATA
HPP10	NO DATA

NOZZLE NUMBER	CURRENT USE
HPP7 18.	*16 & 19 INTERAREA LINE
19.	TO/FROM F AREA
HPP8	NO DATA

CAD NO.	TITLE:	
SE5-2-2017711	HDB8	NO SCALE
		5000-44-3190W

DRAFT

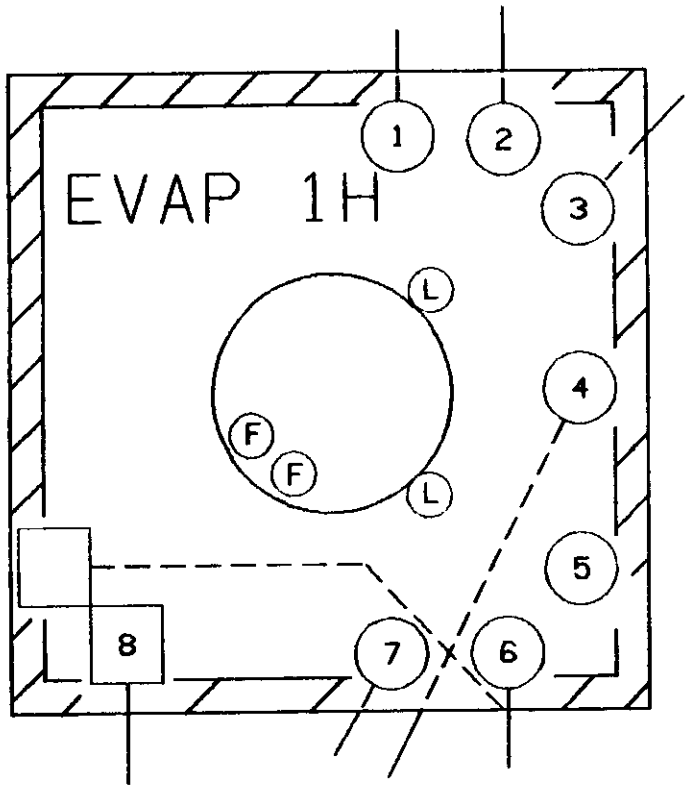

LEGEND

☐ HORIZONTAL NOZZLE

○ VERTICAL NOZZLE

** NOZZLE NUMBER	CURRENT USE
1.	TO TK.9
2.	TO TK.24
3.	TO TK.23
4.	FR.TK.13
5.	SPARE
6.	TO TK.22
7.	TO H-CTS
8.	TO TK.13

DRAFT

** THESE ARE NOT ACTUAL NOZZLE NUMBERS

CAD NO.	TITLE:	NO SCALE
SE5-2-2017712	EVAP 1H	6000-44-3190W

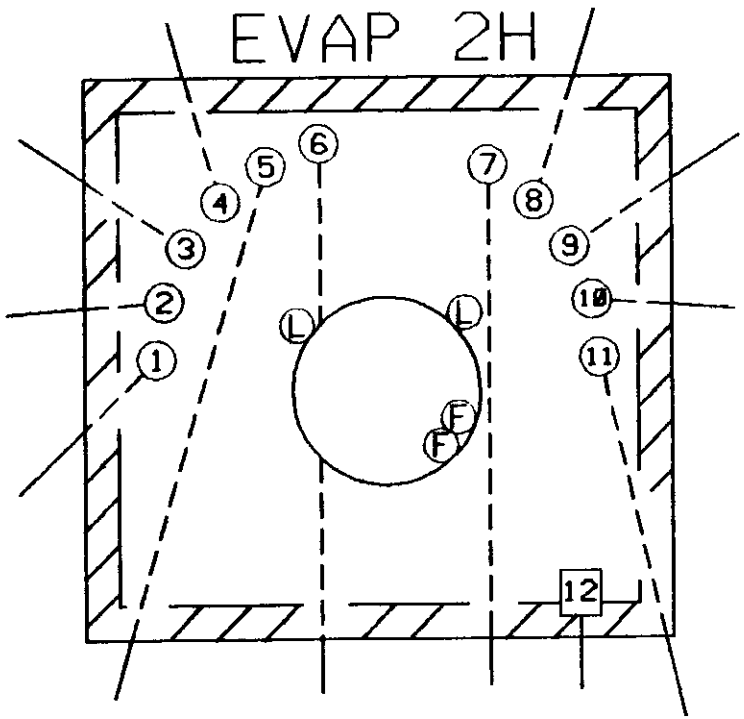

LEGEND

□ HORIZONTAL NOZZLE

○ VERTICAL NOZZLE

** NOZZLE NUMBER	CURRENT USE
1.	SPARE
2.	TO TK.42
3.	TO TK.38
4.	TO TK.39
5.	TO TK.48
6.	TO TK.50
7.	TO TK.51
8.	TO TK.40
9.	TO TK.41
10.	TO TK.43
11.	TO TK.49
12.	FR.TK.43

DRAFT

** THESE ARE NOT ACTUAL NOZZLE NUMBERS

CAD NO.	TITLE:	NO SCALE
SE5-2-2017712	EVAP 2H	6000-44-3190W

AREA	LINE NUMBER	LINE TYPE	FROM	TO	PRIMARY MATERIAL	PRIMARY DIAMETER (INCHES)	SECONDARY MATERIAL	LINE LENGTH (FEET)	ELEVATION CHANGE (FEET)	REMARKS	COMMENTS
F		SPARE	FDB3 [6]	SPARE	SS	3	CS			238273	
F		SPARE	FDB6 [8]	SPARE	SS	3	CS				
F		SPARE	FDB3 [13]	SPARE	SS	3	CS			238273	
F		SPARE	FDB6 [7]	SPARE	SS	3	CS				
F		PROCESS	FDB2	HDB2[23]		3					ABANDONED
F		SPARE	FDB3 [8]	SPARE	SS	3	CS			238273	
F		SPARE	FDB3 [14]	SPARE	SS	3	CS			238273	
F		SPARE	FDB3 [11]	SPARE							
F		SPARE	FDB3 [12]	SPARE	SS	3	CS			238273	
F		SPARE	FDB5 [8]	SPARE		2					
F		SPARE	FDB5 [7]	SPARE		2					
F		SPARE	FDB3 [7]	SPARE	SS	3	CS			238273	
F		SPARE	FDB3 [5]	SPARE	SS	3	CS			238273	
F	73	PROCESS	TANK 26	TANK44							
F	74	PROCESS	TANK 26	TANK 45							
F	75	PROCESS	TANK 26	TANK 46							
F	76	PROCESS	TANK 26	TANK 47							
F	77	SPARE	TANK 26	SPARE							
F	78	SPARE	TANK 26	SPARE							
F	101	PROCESS	FDB4 [5]	FPP2 [6] TRANSFER PUMP INLET	SS	3	CS			200566	
F	102	PROCESS	FDB4 [2]	FPP3 [6] TRANSFER PUMP INLET	SS	3	CS			235672	
F	103	PROCESS	FDB4 [7]	FDB2 [ ]	SS	3	CS				
F	104	PROCESS	FDB4 [9]	FDB3 [9]	SS	3	CS			700962	
F	105	PROCESS	FDB4 [11]	TANK 27 [ ]	SS	3	CS			701227	700931
F	106	PROCESS	FDB4 [10]	TANK 28 [ ]	SS	3	CS			701227	700931
F	107	PROCESS	TANK 26 [ ]	FDB4 [13]	SS	3	CS			7012261	700927
F	108	PROCESS	FDB3 [15]/FDB2[32]	FDB2[32]/FBB3[15]	SS					W700166	
F	108	PROCESS	FDB3[15]/FDB2[23]	FDB2[32]/FDB3[15]		3				W238318	
F	108	PROCESS	FDB4 [16]	TANK 25 [ ]	SS	3	CS			W700166	
F	109	PROCESS	FDB4 [12]	TANK 26 [ ]	SS	3	CS			700927	701226
F	109	PROCESS	FDB2[37]	TANK7	SS	3	CS			W238318	
F	110	PROCESS	TANK7	FDB2[31]	SS	3	CS			W238318	
F	111	PROCESS	FDB2[30]	FDB3 [16]	SS	3	CS			W238338	235672

DRAFT

AREA	LINE NUMBER	LINE TYPE	FROM	TO	PRIMARY MATERIAL	PRIMARY DIAMETER (INCHES)	SECONDARY MATERIAL	LINE LENGTH (FEET)	ELEVATION CHANGE (FEET)	REMARKS	COMMENTS
F	112	PROCESS	FDB3 [17]	FDB2[29]	SS	3	CS			W238338	235672
F	114	PROCESS	FDB2[ ]	FDB1[ ]							
F	115	PROCESS	FDB2[ ]	FDB1[ ]							
F	151	PROCESS	FDB3 [4]	TANK 33 [ ]	SS	3	CS			??	
F	151	PROCESS	FPP2 [5] TRANSFER PUMP OUTLET	FDB4[6]						701226	
F	152	PROCESS	FPP2 [7] TRANSFER JET	FDB4 [4]	SS	3	CS			700566	
F	152	PROCESS	TANK 33 [ ]	FDB3 [3]	SS	3	CS			??	
F	156	PROCESS	FDB3 [2]	TANK 34 [ ]	SS	3	CS			238273	
F	157	PROCESS	TANK 34 [ ]	FDB3 [1]	SS	3	CS			238273	
F	161	PROCESS	FDB2[ ]	FDB3[ ]							
F	201	PROCESS	FPP3 [5] TRANSFER PUMP OUTLET	FDB [3]							
F	202	PROCESS	FPP3 [7] TRANSFER JET	FDB4 [1]							
F	397	PROCESS	TANK 26	TANK 25							
F	497	PROCESS	TANK 26	TANK 27							
F	597	PROCESS	TANK 26	TANK 28							
F	960	PROCESS	TANK 25	TANK 26							
F	1012	PROCESS	EVAP16F	TANK 26							
F	1040	PROCESS	TANK 26 [ ]	FDB6 [4]	SS	3	CS			701848	
F	1104	PROCESS	TANK 28 [ ]	FDB5 [9]							
F	1377	PROCESS	EVAP16F	TANK 26							
F	1378	PROCESS	EVAP16F	TANK 25							
F	1379	PROCESS	EVAP16F	TANK 27							
F	1380	PROCESS	EVAP16F	TANK 28							
F	1383	PROCESS	EVAP16F	TANK 44							
F	1384	PROCESS	EVAP16F	TANK 45							
F	1385	PROCESS	EVAP16F	TANK 46							
F	1386	PROCESS	EVAP16F	TANK 47							
F	1408	PROCESS	EVAP16F	TANK 27							
F	1414	PROCESS	EVAP16F	TANK 27							
F	1461	PROCESS	FDB4 [20]	TANK 44 [ ]	SS	3	CS			702302	
F	1462	PROCESS	FDB4 [19]	TANK 45 [ ]	SS	3	CS			702302	
F	1467	PROCESS	FDB4 [18]	TANK 46 [ ]	SS	3	CS			702304	
F	1468	PROCESS	FDB4 [17]	TANK 47 [ ]	SS	3	CS			702304	

DRAFT

AREA	LINE NUMBER	LINE TYPE	FROM	TO	PRIMARY MATERIAL	PRIMARY DIAMETER (INCHES)	SECONDARY MATERIAL	LINE LENGTH (FEET)	ELEVATION CHANGE (FEET)	REMARKS	COMMENTS
F	1470	SPARE	FDB4 [14]	SPARE ?	SS	3	CS			701873	702306
F	1471	SPARE	FDB4 [15]	SPARE ?	SS	3	CS			702306	
F	1472	PROCESS	FDB3 [10]	FDB4 [8]	SS	3	CS			700962	
F	1475	PROCESS	FDB1 [ ]	FPP3 [1]		3				702148	
F	1476	PROCESS	FDB1 [ ]	FPP3 [2]							
F	1478	PROCESS	FDB1 [ ]	FPP3 [1]		3					
F	1488	PROCESS	FDB1 [ ]	FPP2[2]							REV.
F	3261	PROCESS	TANK 33 [ ]	FDB5 [3]	SS	2	CS				
F	3265	PROCESS	F-CTS TANK (242-3F)	FDB5 [1]	SS	2	CS				
F	3266	VENT	EVAPORATOR 242-F	FDB6 [5]	SS	3	CS			701934	
F	3267	PROCESS	TANK 7 [ ]	FDB6 [1]	SS	3	CS			701934	
F	3273	PROCESS	FDB5 [10]	TANK 28 [ ]							
F	3274	PROCESS	FDB5 [ ]	FPP3 [3]							
F	3275	PROCESS	FDB5 [2]	F-CTS TANK (242-3F)	SS	2	CS				
F	3276	PROCESS	FDB5 [4]	TANK 33 [ ]/34 [ ]	SS	2	CS				
F	3277	PROCESS	FDB6 [6]	EVAPORATOR 242-F	SS	3	CS			701934	
F	3278	VENT	FDB6 [2]	TANK 7 [ ]	SS	3	CS			701934	
F	3279	VENT	FDB6 [3]	FPP3 [3]	SS	3	CS			702723	
F	3282	DRAIN		FPP2 [4]							
F	4381	SPARE	FDB5 [6]	SPARE	SS	2	CS				
F	4428	SPARE	FDB5 [5]	SPARE	SS	2	CS				
H		SPARE	HDB8[FN7]	HPP9[2]		3					
H		PROCESS	HDB8[FN16]	HPP7[4]		3				778356	778330
H		SPARE	HDB8[FN6]	HPP8[2]		3					
H		SPARE	HPP6[3,4]	SPARE							
H		PROCESS	HDB8[FN1]	HPP7[3]							
H		PROCESS	HPP10		?						
H		SPARE	HDB8[24]	SPARE							
H		SPARE	HPP5[3,4]	SPARE							
H		PROCESS	TANK 12	HDB2[26]							
H		SPARE	HDB5[2]	SPARE	SS	3	CS				
H		SPARE	HDB8[FN10]	HPP9[4]							
H		PROCESS	HDB8[FN11]	HPP8[4]							
H		PROCESS	HPP9[5]	HDB8[FN13]							
H			HPP6[1,2]	FROM SEPERATIONS CANYONS (ONE HEADER IN USE, ONE SPARE)							
H		PROCESS	HDB7[3]	HDB8[1]							VIA DB7
H		PROCESS	HDB8[6]	SPARE							
H		PROCESS	HDB8[5]	SPARE							

DRAFT

AREA	LINE NUMBER	LINE TYPE	FROM	TO	PRIMARY MATERIAL	PRIMARY DIAMETER (INCHES)	SECONDARY MATERIAL	LINE LENGTH (FEET)	ELEVATION CHANGE (FEET)	REMARKS	COMMENTS
H		PROCESS	HDB8[19]	SPARE							
H		SPARE	HDB6[14]	SPARE	SS	3	CS				
H		PROCESS	HDB8[22]	SPARE							
H		PROCESS	HPP7[5]	HDB8[WN2]	?	3					VIA DB7
H		PROCESS	HDB8[23]	SPARE							
H		PROCESS	HPP7[5]	HDB8[FN3]		3				778356	
H		PROCESS	HDB8[FN4]	HPP9[3]							
H		PROCESS	HPP8[5]	HDB8[FN14]		3					
H		PROCESS	HDB8FN12]	HPP10[2]		3					
H		SPARE	HDB4[1]	SPARE	SS	3	CS				
H		PROCESS	HPP7[2]	HDB8[FN15]							
H		PROCESS	HDB8[7]	SPARE(AUX PP)							
H			HPP5[1,2]	FROM SEPARATIONS CANYONS & 299-H(ONE HEADER IN USE, ONE SPARE)							
H		SPARE	H-CTS[19]	SPARE	SS	2	CS				CAPPED
H		PROCESS	AUX PP	HPP10							VIA HDB8[8]
H		PROCESS	HDB8[WN2]	HPP8[3]		3					
H		SPARE	HDB5[1]	SPARE	SS	3	CS				
H		PROCESS	HDB8[FN8]	HPP10[3]							
H		SPARE	HPP5[5]	SPARE							
H		STEAM	HDB5[5]		STEEL	2	N/A			S5-2-4255	
H		PROCESS	TANK 11	HDB2[25]							
H		SPARE	HPP10[4]	HDB8[FN5]		3					
H		PROCESS	HDB2[24]	FDB2		3					ABANDONED
H		SPARE	HDB6[3]	SPARE							
H		SPARE	HDB6[4]	SPARE							
H		PROCESS	HPP10[5]	HDB8							
H	P102	PROCESS	HDB6[8]	TANK 35		3				W700166	
H	P102	PROCESS	HDB2[15]	HDB6[2]		3				W700166	
H	P103	PROCESS	HDB6[9]	TANK 36		3				W700166	
H	P104	PROCESS	TANK 37	HDB6[10]		3				W700166	
H	P105	PROCESS	HDB6[1]	TANK 13		3				W700166	
H	P151	PROCESS	TANK 35	HDB6[5]		3				W700166	
H	P201	PROCESS	TANK36	HDB6[6]		3				W700166	
H	P251	PROCESS	HDB6[7]	TANK 37		3				W700166	
H	??	PROCESS	HDB5[6]	TANK 21	SS	3	CS			S5-2-4255	
H	??	PROCESS	HDB5[4]	TANK 21	SS	2	CS			S5-2-4255	
H	??	PROCESS	HDB5[3]	TANK22	SS	3	CS			S5-2-4255	
H	??	PROCESS	HDB5[7]	TANK 23	SS	3	CS			S5-2-4255	
H	??	PROCESS	HPP7[5]	HDB8							

DRAFT

AREA	LINE NUMBER	LINE TYPE	FROM	TO	PRIMARY MATERIAL	PRIMARY DIAMETER (INCHES)	SECONDARY MATERIAL	LINE LENGTH (FEET)	ELEVATION CHANGE (FEET)	REMARKS	COMMENTS
H	9	PROCESS	HDB2[6]	PP#3							
H	10	PROCESS	HPP1[ ]	HDB2[5]							
H	11	PROCESS	HPP2[ ]	HDB2[4]							
H	12	PROCESS	HPP2[ ]	HDB2[3]							
H	13	PROCESS	HPP3[ ]	HDB2[8]							
H	14	PROCESS	HPP3[ ]	HDB2[7]							
H	15	PROCESS	HPP4[ ]	HDB2[2]							
H	16	PROCESS	HPP4[ ]	HDB2[1]						LEAKED IN PAST	ABANDONED
H	17	PROCESS	HDB2[16]	TANK 13		3					
H	18	PROCESS	HDB2[15]	TANK 13		3					
H	19	PROCESS	HDB2[14]	TANK 15		3					
H	20	PROCESS	HDB2[13]	TANK 15		3					
H	21	PROCESS	HDB2[12]	TANK 16		3					
H	22	PROCESS	HDB2[11]	TANK 16		3					
H	23	PROCESS	HDB2[10]	TANK 14		3					
H	24	PROCESS	HDB2[9]	TANK 14		3					
H	25	PROCESS	HDB2[24]	HDB2[]	SS	3	CS			W163385	CAPPED/AB.
H	26	PROCESS	HDB2[]	HDB2[23]	SS	3	CS			W163385	CAPPED/AB.
H	27	PROCESS	HDB2[22]/T13/	T21/HDB2/[22]	SS	3	CS			W163462,235672	REV. FR TK13
H	29	PROCESS	HDB2[20]	HDB5[11]	SS	3	CS			W163385	
H	29	PROCESS	HDB5[11]	HDB2[20]	SS	3	CS			S5-2-4255	
H	30	PROCESS	HDB2[19]	HDB5[10]	SS	3	CS			W163385	
H	30	PROCESS	HDB5[10]	HDB2[19]	SS	3	CS			S5-2-4255	
H	31	PROCESS	HDB2[18]	HDB4[15]	SS	3	CS			W163385	ABANDONED
H	32	PROCESS	HDB2[17]	HDB4[3]	SS	3	CS			W103385	ABANDONED
H	101	SUMP	HDB4[11]	TANK 29	SS	2	CS			W236508	
H	102	PROCESS	TANK 29	HDB4[9]	SS	3	CS			W236808	
H	103	PROCESS	HDB4[6]	TANK 31	SS	3	CS				
H	104	PROCESS	HDB4[4]	TANK 32	SS	3	CS				
H	105	PROCESS	HDB4[8]	TANK 30	SS	3	CS				
H	106	SPARE	HDB4[15]	HDB2[18]	SS	3	CS				
H	107	PROCESS	HDB4[13]	HDB2[17]	SS	3	CS				
H	108	PROCESS	HDB4[12]	HDBS[9]	SS	3	CS			W236508	
H	109	PROCESS	HDB4[10]	TANK 29	SS	3	CS			W236508	
H	110	PROCESS	TANK 31	HDB4[5]	SS	3	CS				
H	111	PROCESS	TANK 32	HDB4[3]	SS	3	CS				
H	112	PROCESS	TANK30	HDB4[7]	SS	3	CS				
H	201	PROCESS	TANKS 35,36,37	H-CTS[22]	SS	2	CS			700166	
H	502		EVAP1H	H-CTS[2]	SS	2	CS			702752	

DRAFT

AREA	LINE NUMBER	LINE TYPE	FROM	TO	PRIMARY MATERIAL	PRIMARY DIAMETER (INCHES)	SECONDARY MATERIAL	LINE LENGTH (FEET)	ELEVATION CHANGE (FEET)	REMARKS	COMMENTS
H	503	VENT	H-CTS[25]	TANK 29	SS	4	CS			702752	
H	504	PROCESS	H-CTS[27]	TANK 29	SS	3	CS			702752	
H	505	PROCESS	H-CTS[21]	TANKS29,30,31,32	SS	2	CS			702752	
H	509	PROCESS	TANKS 29,30,31,32	H-CTS[24]	SS	2	CS			702752	
H	510	PROCESS	H-CTS[20]	TANKS35,36,37	SS	2	CS			700166	
H	1051	PROCESS	HDB6[13]	HDB4[2]	SS	3	CS			W236570	
H	1051	PROCESS	HDB5[9]	HDB4[12]	SS	3	CS			S5-2-4255	
H	1051	PROCESS	HDB4[2]	HDB6[13]	SS	3	CS				
H	1052	SUMP	HDB6[11]	TK35	SS	2	CS			W448622	
H	1626	PROCESS	TANK 43	HDB7[10]	SS	3	CS			701888	700786
H	1628	PROCESS	TK43	EVAP2H	SS	1	CS			701725	
H	1651	PROCESS	EVAP2H	TK43	SS	2	CS			701725	
H	1653	PROCESS	EVAP2H	TK41	SS	2	CS			701725	700788
H	1656	PROCESS	EVAP2H	TK40	SS	2	CS			701725	700785
H	1825	PROCESS	TANK 24	HDB5[8]	SS	3	CS			S5-2-4255	
H	2701	PROCESS	EVAP2H	TK39	SS	2	CS			701725	700786
H	2702	PROCESS	EVAP2H	TK3B	SS	2	CS			701725	700786
H	2708	PROCESS	EVAP2H	TK42	SS	2	CS			701725	
H	3051	PROCESS	HDB7[11]	TANK 43	SS	3	CS			701888	700786
H	3052	PROCESS	HDB7[12]	TANK 41	SS	3	CS			701888	
H	3053	PROCESS	HDB7[13]	TANK 40	SS	3	CS			701888	700786
H	3054	PROCESS	HDB7[14]	TANK 39	SS	3	CS			701888	700786
H	3055	SUMP	HDB7[15]	TANK 38	SS	2	CS			701888	700786
H	3056	PROCESS	HDB7[20]	TANK 49	SS	3	CS			701888	700786
H	3057	PROCESS	HDB7[19]	TANK48	SS	3	CS			701888	
H	3059	PROCESS	HDB7[21]	TANK 50	SS	3	CS			701888	703774
H	3060	PROCESS	HDB7[22]	TANK 51	SS	3	CS			701888	
H	3062	SPARE	HDB7[23]	HDB8[3]	SS	3	CS			701888	
H	3063	SPARE	HDB7[24]	HDB8[2]	SS	3	CS			701888	
H	3068	PROCESS	HDB2[31]	HDB7[5]	SS	3	CS			701888	
H	3068	PROCESS	HDB2[31]	TANK 41		3			??		VIA HDB7
H	3069	PROCESS	HDB7[6]	HDB2[30]	SS	3	CS			701888	
H	3069	PROCESS	HDB2[30]	TANK38		3			???		VIA HDB7
H	3070	PROCESS	HDB7[3]	HDB8[1]	SS	3	CS		??	701888	
H	3071	PROCESS	HDB2	HDB7[4]	SS	3	CS				
H	3080	PROCESS	TANK 43	HDB2[29]		3					VIA HDB7
H	3081	PROCESS	HDB2[28]	TANK 43		3					VIA HDB7
H	3083	PROCESS	HDB7[17]	TANK 38	SS	3	CS			701888	700786
H	3084	PROCESS	HDB7[18]	TANK 42	SS	3	CS			701888	700786

DRAFT

6

AREA	LINE NUMBER	LINE TYPE	FROM	TO	PRIMARY MATERIAL	PRIMARY DIAMETER (INCHES)	SECONDARY MATERIAL	LINE LENGTH (FEET)	ELEVATION CHANGE (FEET)	REMARKS	COMMENTS
H	3094	PROCESS	HPP6[7]	HDB7[1]	SS	3	CS				
H	3095	PROCESS	HPP6[6]	HDB7[2]	SS	3	CS				
H	3096	PROCESS	HDB7[9]	HDB8[15]	SS		CS		??		
H	3097	PROCESS	HPP5[7]	HDB7[7]	SS	3	CS				
H	3098	PROCESS	HPP5[6]	HDB7[8]	SS	3	CS				
H	3102	PROCESS	HDB7[25]	HDB8[16]	SS	3	CS		??		
H	3932	PROCESS	EVAP2H	TK48	SS	2	CS			701725	708946
H	3933	PROCESS	EVAP2H	TK49	SS	2	CS			701725	708947
H	3934	PROCESS	EVAP2H	TK50	SS	2	CS			701725	708947
H	3935	PROCESS	EVAP2H	TK51	SS	2	CS			701725	708947

DRAFT

Department of Energy
Savannah River Operations Office
P.O. Box A
Aiken, South Carolina 29802

RECEIVED

FEB 13 1998

Post-It™ brand fax transmittal memo 7671	# of pages ▸ 2
To Chuck Hayes	From Melinda Vickers
Co. SRS / EPD	Co. DHEC
Dept.	Phone # 734-0819
Fax # 803-725-4676	Fax #

Ms. Melinda Vickers
Industrial Agricultural Permitting Division
South Carolina Department of Health and
Environmental Control
2600 Bull Street
Columbia, SC 29201

Dear Ms. Vickers:

SUBJECT: Savannah River Site (SRS) High Level Radioactive Waste Storage Tank Closures

As SRS completes closing the second High Level Waste (HLW) tank, I wanted to take this opportunity to again express appreciation and respect for the role you and your staff played in supporting achievement of these significant milestones. I also wanted to address a point of clarification with respect to "incidental waste".

Initially, it was believed that the Nuclear Regulatory Commission (NRC) classification, review, approval, or authorization of "incidental waste" was required. In fact, this was the case when approval was provided by the South Carolina Department of Health and Environmental Control (SCDHEC) for the *Industrial Wastewater Closure Plan for F and H Area High Level Waste Tank Systems; Industrial Wastewater Closure Module for the High Level Waste Tank 20 System;* and *Industrial Wastewater Closure Module for the High Level Waste Tank 17 System.* Consequently, the SCDHEC approval letters for the above documents required NRC "classification" or "authorization" of "incidental waste" prior to commencement of tank closure activities.

Subsequent discussions between the Savannah River Operations Office and the NRC regarding the determination that the small fraction of residual waste remaining in the HLW tanks after waste removal is "incidental waste" and not HLW; it was agreed that it is incumbent upon the U.S. Department of Energy (DOE) to determine whether the "incidental waste" criteria of the Bernero (NRC) to Lytle (DOE) letter of March 1993 could be satisfied with respect to the HLW tanks at SRS. Therefore, specific authorization, approval, or classification of SRS "incidental waste" by the NRC would not be required or provided. This point was not clearly defined until late in the planning process. Your staff was subsequently informed and accepted the fact that specific documentation from the NRC would not be forthcoming and closure of Tanks 20 and 17 proceeded as planned. Even though all parties involved recognize that NRC documentation is no longer an issue, I feel that we would be remiss if we did not address and document this discrepancy with respect to the HLW tank closure process.

2

FEB 1 3 1998

Should you have any questions, please contact me or Larry Ling of my staff at (803) 208-8248.

Howard B. Gnann, Director
Programs Division

PD:LTL:eeh

PB-98-0030

cc:
R. Erickson, EM-32
A. Ragan, SCDHEC
D. Bignell, WSRC
R. Weller, NRC

Project No.

Works

Computer Date 1/28/97

DOE & NRC MEETING ON HLW TANK CLOSURE:

LARRY LINK	DOE-SR	(803) 208-8248	725-PAGE
Jeff Newman	WSRC-HLW	(803) 208-8659	pager 3097
Melinda Vickers	SCDHEC/Industrial WW Div.	803-734-0819	
DON BLAKE	DOE-SR	803-208-8245	
Philip Young	Halliburton NUS	803-649-7963	
Paul d'Entremont	WSRC-HLW	803-208-8727	
NARASI SRIDHAR	CNWRA	210-522-5538	
RICK WELLER	NRC	301-415-7287	
MARGARET FRECHLING			
JENNIFER DAVIS	USNRC	(301) 415-5874	
Lee Watkins	DOE	803-208-6053	
TOM LEX	WSRC-HLW	803-725-4596	
Jim French	WSRC-HLW	803-208-1527	
AUSTIN SCOTT	WSRC-HLW	803-725-2685	(PART TIME)

Post-it™ Fax Note 7671

To Chuck Hayes	Date 1/28/97 # of pages ▶ 6
Co./Dept. EPD/WSRC	From Melinda Vickers
Phone # 803-725-8838	Co.
Fax # 803-725-4676	Phone # 734-0819
	Fax #

2

NRC STAFF REVIEW SCHEDULE FOR CLASSIFICATION OF RESIDUAL WASTES IN SAVANNAH RIVER HLW STORAGE TANKS

ACTIVITY	MILESTONE
• Receive request from DOE for NRC involvement in SR tank closure activities (Dec. 20, 1996, letter from L. Watkins to C. Paperiello).	12/20/96
• Receive draft IA/MOU from DOE, for review and comment, to support NRC involvement in SR tank closure.	1/23/96
• Complete development of final IA/MOU and prepare Commission paper to seek approval of IA/MOU for signature by NMSS Office Director (Paperiello).	2/7/96
• Obtain Commission approval for signature of IA/MOU.	2/21/96
• Office Director signs IA/MOU. With IA/MOU in place, staff initiates review of DOE methodology for waste classification. Estimate 6-7 months necessary to complete review, including time allocated for Commission review and approval of results of staff evaluation.	2/24/96
• Request additional information or arrange periodic meetings, as necessary, to complete staff review.	Schedule as necessary
• Complete technical evaluation of DOE methodology for tank residual waste classification (i.e., conformance with criteria in 1993 Bernero letter) and prepare Commission paper for approval of results of staff evaluation and draft response letter to DOE.	Aug. '97
• Obtain Commission approval of results of staff evaluation and letter to DOE.	Sept. '97
• Issue letter to DOE with results of evaluation of waste classification methodology.	Sept. '97

Management of Closed SRS HLW Tanks as Incidental Waste

Discussion points for meeting with U.S. Nuclear Regulatory Commission

28 January 1997

Summary

- DOE plans for HLW tank closure at SRS include:
  - Waste Removal
  - Tank Cleaning
  - Structural Stabilization with backfill
- Plans are to manage the closed waste tanks as incidental waste
- Closed waste tanks will meet previous NRC guidance for incidental waste

4

Previous NRC Guidance

- States of Washington and Oregon, and Yakima Indian Nation requested NRC establish a process to evaluate the treatment of defense wastes
- NRC denied the request and affirmed that DOE was responsible for safely managing the waste
- NRC guidance to DOE was that waste is incidental if it meets three criteria:
  1. Processed to maximum extent technically and economically practical
  2. Within Class C Concentration Limits
  3. Safety requirements comparable to 10 CFR 61

Criteria 1: Waste is Processed to Extent Technically and Economically Practical

- Tank Farm will be closed under South Carolina and EPA regulations
- SRS Closure Plan, approved by DOE, EPA, and South Carolina Department of Health and Environmental Control (SCDHEC), has established performance objectives for closure
- SCDHEC will approve the closure of each tank
- These regulatory controls will ensure that waste is removed to the extent practical to prevent environmental insult

Criteria 2: Waste does not exceed Class C limits

- SRS will ensure that each waste tank does not exceed Class C limits
- SRS will use concentration averaging
  - "Based on solidified nuclide activity divided by the . . . weight of the solidified mass." (Branch Technical Position, paragraph C.3.2)
  - SRS considers the solidified mass to be the sludge plus the reducing grout
  - Because the waste is buried deeply, the solidified mass can be considered homogeneous with respect to an intruder (Branch Technical Position, Introduction)

solidified mass = sludge + 1st pour of reducing grout where mixing occurs

Waste and Grout Mixing

- Tests underway to determine the extent of mixing between grout and waste

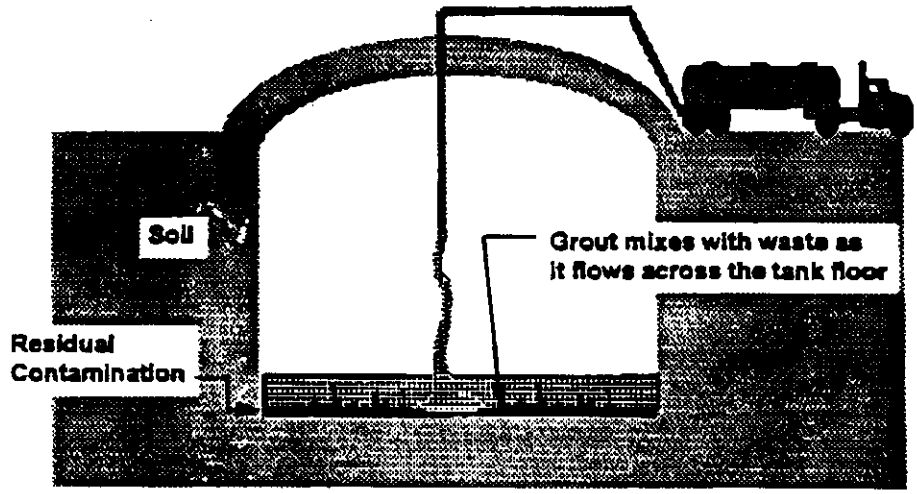

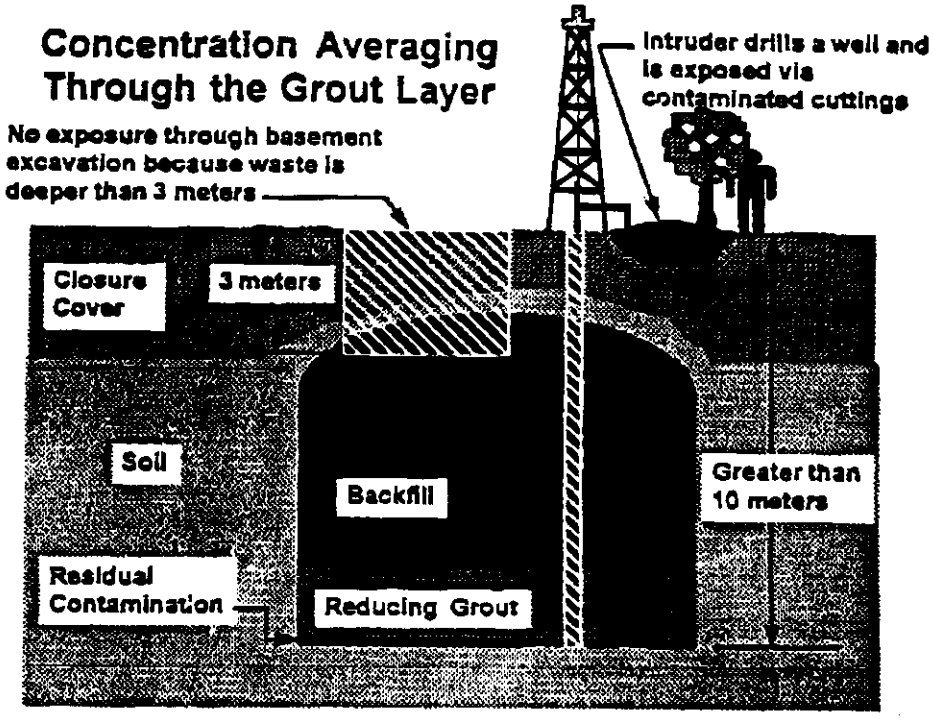

Criteria 3: Waste satisfies safety requirements in 10 CFR 61

SRS Closure Plan requirements are more restrictive than 10 CFR 61 requirements:

- **4 mrem per year is the limit for dose to a member of the public, according to the SRS Closure Plan**
- **NRC requirements establish several limits for exposure to public, the lowest being 25 mrem per year**

AGENDA
NUCLEAR REGULATORY COMMISSION VISIT
JANUARY 27-28, 1997

DISCUSSION OF SAVANNAH RIVER SITE HIGH-LEVEL WASTE TANK CLOSURE

January 27 Monday	1:00 p.m.	Arrive SRS 703-A for badging Whole-body count	Ling
	2:15 p.m.	Depart for 704-S	
	2:30 p.m.	Arrive at 704-S CR-B Welcome & Opening Remarks	Watkins/Anderson
	3:00 p.m. - 4:00 p.m.	Tour DWPF	Jaworowski
	4:15 p.m.	Depart for F-Tank Farm	
	4:30 p.m. - 5:30 p.m.	Visit Tanks 17 -20 Area & F-Tank Farm	Hinson/Henderson
	5:45 p.m.	Depart for Receiving Basin for Off-Site Fuels (RBOF)	
	6:00 p.m. - 6:30 p.m.	Tour RBOF Facility	McAlhany
	6:45 p.m.	Return to 704-S	

2

January 28 Tuesday	8:00 a.m. 3:30 p.m.	704-S CR-B Discussion of High-Level Waste Tank Closure (to include)	
	-	Development of Closure Plan with SCDHEC & EPA	Ling
	-	Knowledge of Tank Inventory & Curie Content	d'Entremont
	-	Tank Sampling	d'Entremont
	-	Application of Bernero to Lytle Letter	Ling
	-	Concentration Averaging & Application of BTP	d'Entremont
	-	Testing at Construction Technology Laboratories	Hannah
	-	Schedule and Sequence of Tank Closures	Ling
	-	Interagency Agreement	Ling
	-	Alternative Provisions of 10CFR61.58 for Closure Criteria	NRC
	-	NRC Review Schedule	NRC
	4:00 p.m.	Depart for Airport	

Participants: NRC - M. Federline, R. Weller, J. Davis, & Narasi Sridhar
DOE - L. Watkins, C. Anderson, L. Ling, & R. Hannah
WSRC - J. French, J. Newman, P. d'Entremont, & J. Cook

F/H HIGH LEVEL WASTE TANK SYSTEMS CLOSURE UPDATE MEETING

1/24/97, 9:30
(SCDHEC-Columbia, Farrow Road)

AGENDA

• Opening Remarks	WSRC/DOE
• Status of NRC Discussions NRC COMING TO SRS 1/27 & 1/28 • MELINDA TO COME TO 1/28 SESSION	DOE
• Tank Closure Schedule	DOE
• Tank 20 Module Review / Approval	All
• Tank 17 Module Progress 17 → 6 TRANSFER TO BEGIN @ 2/10 17 MODULE TO BE SUBMITTED TO DHEC 2ND WEEK OF FEBRUARY	WSRC
• Path Forward / Summary	All
• Next Meeting	All

• GROUNT VENDOR HAS BEEN CHOSEN GEORGE THROOP CO.

• WILLIE MORGAN (PERMITTING LIAISON) FOR ISSUES RELATED TO BATCH PLANT

* TANK 17 MODULE REVIEW/APPROVAL SCHEDULE TO MELINDA

Date: January 24, 1997

F/H HLW TANK CLOSURE UPDATE MEETING

NAME	ORG.	ADDRESS	PHONE NO.
CHUCK HAYES	WSRC-EPD	BLDG 742-A (SRS)	803/725-8838
RAY HANNAH	DOE-HLW	703-H	803 208-1541
Jeff Newman	WSRC-HLW	703-H	208-8659
GENE TURNER	DOE-EQMD	703A	(803) 725-3676
Ray Patterson	WSRC-ER	730-2B (SRS)	(803) 952-6397
ANDREW PRESTON	WSRC-ER	730-2B (SRS)	(803) 952-6398
RODNEY WINGARD	SC DHEC	DHEC-FARROW RD.	(803) 896-4249
TIMOTHY T. HENDERSON	DOE-HLW PD	703-H Rm. 123	(803) 208-0389
Melinda Vickers	DHEC-IWW	2600 Bull St ~~803-734-0819~~	803-734-0819
Christine Hodges	DHEC-IWW	2600 Bull St	803-734-4393
Tanya Smith	DOE-ERD	703-A	803-725-8131
Roger E. Schweitzer	SC-DHEC	DHEC-Farrow Rd	803-896-4023
Shelly Sherrill	SC-DHEC	DHEC-Farrow Rd.	803 896-4181
Keehna Frasier	SC DHEC	DHEC-Farrow	" 896-4180
Keith Collinsworth	SCDHEC	2600 Bull St.	803-896-4055

Post-it™ Fax Note 7671

Date 1/27/96	# of pages ▸ 3
To Chuck Hayes	From Melinda Vickers
Co./Dept. WSRC/EPD	Co.
Phone # 725-8838	Phone # 734-0819
Fax # 725-4676	Fax #

MELINDA

- FORMAL REVIEW & APPROVAL (IN WRITING) @ SEPTEMBER FOR ENTIRE PROGRAM
- SCHEDULE FROM MELINDA

- 17 & 20 GO BACK & TALK TO SUPERVISION & POSSIBLY PUT SOMETHING IN WRITING (BUT NOT CONCURRING W/ INCIDENTAL WASTE CONCLUSION)

NRC APPEARS TO BE HAPPY W/ APPROACH & CURRENTLY HAS NO OBJECTIONS

Dale - Wire EAC into review CC: ALS Dale BC FILE

DOE F 1325.8 (Rev 11-12-91)

United States Government

Department of Energy (DOE)

Savannah River Operations Office (SR)

memorandum

DRAFT

- EAC INVOLVEMENT CHAS MURPHY

DATE:

REPLY TO ATTN OF: PD (Ling/803-208-8248)

• NEWMAN IS SENDING SLIDES

SUBJECT: Savannah River Site (SRS) Closure of Radioactive High Level Waste (HLW) Tank Systems

TO: Ms. Amina Khan, Office of Environmental Management (EM-1)

• d'ENTREMONT'S PRESENTATION MAY '97

As a follow-up to our previous conversations relative to HLW tank closures, I am forwarding this memorandum for your information to better describe background and details associated with closure of HLW tank systems at SRS. As an initial point of discussion I would like to reiterate that the activities we are undertaking are associated with operational closure of the tank system to support closure of the operating permit, not Comprehensive Environmental Response Compensation, and Liability Act (CERCLA) closure of the tank system sites. The relationship between these two closure activities is discussed in Attachment 1.

SRS established, in February 1996, the HLW Tank Closure Program with a mission to operationally close HLW tank systems that are no longer required to support on-going activities. SRS completed closure of Tank 20 on June 24, 1997. This was the first operational closure of a HLW tank in the DOE complex. SRS did not achieve this significant accomplishment without the cooperation, support, and counsel of the South Carolina Department of Health and Environmental Control (SCDHEC), Environmental Protection Agency Region IV (EPA IV), the Nuclear Regulatory Commission (NRC) and the SRS Citizens Advisory Board. A challenge to operationally closing the first ever HLW tank was the need to develop specific requirements and guidance relative to such closure. We believed sufficient guidelines and requirements existed for other activities dealing with both HLW and Low Level Waste which, if properly implemented for operational closure of HLW tank systems, would assure protection of the public, workers, and environment. For example, criteria for "incidental waste" determination associated with waste removed from HLW tanks at Hanford existed. Working with the NRC staff, SRS used this criteria as well as 10CFR61 as a basis for developing specific closure criteria for Tanks 20 and 17.

SRS also developed, and in 1997 received NRC approval of, a Memorandum of Understanding (MOU) and Interagency Agreement (IA) for the NRC to review the methodology employed by SRS for HLW tank closure and the basis for the "incidental waste" determination. While both SRS and the NRC recognize such a review is not regulatorally required, it is considered prudent. The result of this review, expected early next year, should enable SRS to better quantify "incidental waste" determination requirements. The approved MOU and IA, Attachments 2 and 3, are provided for your information.

Additionally relative to Tanks 20 and 17, the source term at the point of compliance associated with the closed tanks was determined to be sufficiently low to enable proceeding with closure activities prior to completing the requested NRC review of SRS methodology. The NRC as well as SCDHEC were informed of our intention to close these tanks prior to the completion of the NRC review, and expressed no objections.

Attachment 1 to this memorandum provides some additional background on the SRS HLW system and further discusses the regulatory aspects of the program and the process by which agreement was reached to support operational closure of SRS HLW tank systems.

DRAFT

2

SRS is proud to be the first site in the complex to operationally close a HLW tank; SRS, the regulators, and stakeholders consider this to be a positive accomplishment. The subject underground carbon steel tanks have been in service for over 40 years and are reaching the end of their useful life posing potential longer term risk. We believe we are taking responsible and prudent action in order to improve protection of human health and the environment and minimize future risk.

If you or your staff should have any questions or require a more detailed briefing, please contact me or Larry Ling at 803-208-8248.

Frank R. McCoy, III
Assistant Manager for
High Level Waste

PD:LTL:eeh

PB-98-0011

Attachment
1. Background on HLW System
2. Memorandum of Understanding
3. Interagency Agreement

cc w/attach:
A. Alm, EM-1, HQ
M. Frei, EM-30, HQ
R. Erickson, EM-32, HQ
P. Brush, EH-1, HQ
C. Borgstrom, EH-42, HQ
W. Dennison, GC, HQ
G. Rudy, DM, SR, 703-A
T. Hennan, AMERWM, SR, 703-A
D. Daraugh, OCC, SR, 703-A
R. Weller, NRC
L. Shaw, SCDHEC
H. Mathis, SCDHEC
K. Collinsworth, SCDHEC
A. Ragan, SCDHEC

bcc w/o attach:
Managers Reading File
AMHLW Reading File
PD Reading File

ADDITIONAL INFORMATION RELATIVE TO CLOSURE OF HIGH LEVEL WASTE SYSTEMS

DRAFT

The Savannah River Site (SRS) High Level Waste (HLW) system consists of several facilities designed for the overall processing of liquid high level radioactive waste. The 51 underground HLW storage tanks at SRS are major components of the HLW System. Approximately, 34 million gallons of radioactive HLW are currently stored in those tanks awaiting further processing.

A Federal Facilities Agreement (FFA) is in effect at SRS with the DOE Savannah River Operations Office (SR), the South Carolina Department of Health and Environmental Control (SCDHEC), and the Environmental Protection Agency Region IV (EPA IV). SR, SCDHEC, and EPA IV signed the FFA pursuant to Section 120 of the Comprehensive Environmental Response, Compensation, and Liability Act (CERCLA) for the comprehensive remediation of SRS; the agreement became effective in August 1993. Twenty-four of the 51 tanks do not meet the standards set forth in Appendix B of the FFA for secondary containment and cooling. SR made a commitment to remove from service the 24 non-compliant tank systems by 2028. SR is currently in the process of developing a schedule to accelerate the removal of these non-compliant tanks from service by 2018. The HLW tanks are permitted by SCDHEC as wastewater treatment facilities under the South Carolina Pollution Control Act and will be removed from service in accordance with South Carolina Regulation R.61-82, "Proper Close-out of Wastewater Treatment Facilities". The removal from service and subsequent closure of these HLW tank systems is essentially an operational closure to enable closure of the operating permit. Closure within the context of CERCLA will be performed at a later date as groups of tanks or distinct areas become ready for closure. It should be noted that since the tanks would initially undergo an operational closure, the regulators wanted to ensure that the operational closure activities would not preclude subsequent CERCLA closure activities. Therefore, a "CERCLA-like" review was also performed as the nine CERCLA Evaluation Criteria were also factored into the planning process.

Additionally, SR prepared an Environmental Assessment in accordance with the National Environmental Policy Act (NEPA) for the proposed closure of the HLW tanks at SRS. Based on the analyses in the EA, SR determined that the proposed action (operational closure) is not a major Federal action which would significantly affect the quality of the human environment within the context of NEPA. Therefore, the preparation of an Environmental Impact Statement was not required and SR issued a Finding of No Significant Impact. . It should also be noted that eventual CERCLA closure of distinct areas will involve, as a matter of law, public notice and review, in a manner similar to the Environmental Impact Statement provisions of NEPA.

The *Industrial Wastewater Closure Plan for F and H Area High Level Waste Tank Systems*, which delineates the general methodology and requirements for closure of all 51 HLW tanks was approved by SCDHEC and EPA IV in July 1996. Details and requirements for closure of individual HLW tank systems would be provided in specific tank system modules. Included in these modules are specific characteristics of the residual tank waste, modeling data, and closure details. The *Industrial Wastewater Closure Module for the High Level Waste Tank 20 System* was approved by SCDHEC with concurrence from EPA IV in January 1997. The *Industrial Wastewater Closure Module for the High Level Waste Tank 17 System* was approved by SCDHEC with concurrence from EPA IV in April 1997.

DRAFT

As part of the closure process, the HLW tanks will be emptied of waste to the extent that is technically and economically practical and to ensure protection of human health and the environment. Only a fraction of residual waste will remain. In conjunction with developing an acceptable closure methodology with SCDHEC and EPA IV, SR consulted with the NRC to determine if the residual waste could be considered as "incidental" waste and as such not require specific NRC licensing or regulatory oversight involvement. Under Section 202 of the Energy Reorganization Act of 1974, the NRC has licensing and related regulatory authority for DOE HLW disposal facilities. High level liquid radioactive waste is defined in Appendix F of 10 CFR Part 50. NRC provided criteria for "incidental" waste in the Bernero (NRC) to Lytle (DOE) letter of March 1993. It should be noted that the final "closed" configuration of a HLW tank is not considered by the regulators as a disposal unit. Rather it is recognized as a closed operational unit.

SRS staff and respective NRC staff have maintained an open line of communication since February 1996 with respect to HLW tank closure issues and progress via the telephone and on a number of occasions in person meetings at SRS and NRC Headquarters. This is to ensure closure activities are consistent with existing applicable requirements and guidelines. The NRC and SR agreed that it is incumbent upon DOE to determine whether the "incidental" waste criteria of the Bernero to Lytle letter could be applied to the HLW tanks at SRS. In the Watkins (SR) to Paperiello (NRC) letter of December 20, 1996, SR indicated that all 51 tanks could be closed under the existing NRC criteria for "incidental" waste. Albeit, some of the tanks would require use of concentration averaging in accordance to guidelines found in the NRC Branch Technical Position (BTP) of January 17, 1995, *Issuance of Final BTP on Concentration Averaging and Encapsulation, Revision in Part to Waste Classification Technical Position*, and some of the tanks would require extensive cleaning operations. The letter also informed the NRC that two tanks have been identified that for SRS to proceed forward with closure activities for those tanks would involve only minimal risks and that without objections from the NRC, SR intended to commence closure of those tanks in February 1997. SR also requested that the NRC review the tank closure methodology and "incidental" waste criteria for closure of future tanks at SRS. Subsequently, a meeting was conducted on January 27-28, 1997, at SRS with senior staff from the NRC and SR in attendance to discuss the path forward for closure of the HLW tanks. The plans and methodology for closure of Tanks 20 and 17 were presented. Since the NRC has not conducted a detailed review, SR recognized that minimal risks were involved and stated at this meeting that unless the NRC had any immediate concerns or objections, that SR intended to proceed forward with closure of Tanks 20 and 17. As part of the NRC review process described above, SR and the NRC agreed to and signed a Memorandum of Understanding and Interagency Agreement effective July 16, 1997, for the NRC to review the SRS tank closure methodology, specifically, SR's "incidental" waste determination process. The product of this review is expected early next year.

It should point out that the overriding performance objective for HLW tank closure at SRS is the EPA Drinking Water Standard of 4 millirem per year at the point of compliance. Due to the hydrogeologic and groundwater conditions at SRS, the 22 tanks in F Tank Farm and 29 tanks in H Tank Farm are in separate groundwater transport segments. Therefore, the 22 tanks in F Tank Farm including other known sources in the area must collectively meet the 4 millirem per year requirement after tank closure. The same applies to the 29 tanks in H Tank Farm including other sources. As a point of reference after closure, Tank 20's contribution to the seepline is calculated to be 0.0055 millirem per year and Tank 17's contribution is calculated to be 0.022 millirem per year.

T.5

Author: Chuck Hayes at SRCCA02
Date: 11/6/97 3:33 PM
Priority: Normal
TO: John Cook at SRCCA03
Subject: Report on Tank 20 Residual

Paul sent this to the wrong Cook. Thanks!

Subject: Report on Tank 20 Residual
From: Paul Dentremont at SRCCH02
Date: 11/6/97 3:22 PM

As you requested, attached is my report on Tank 20 residual inventory. This is the report that I used in my presention to the Environmental Advisory Committee, which occurred on 15 May 1997 (I checked my notebook). I simply handed out the report and talked them through it. The previous quarter (in February) they had requested to review the method for determining the tank inventory, which is why I talked to them at their May meeting.

I also sent a copy to Jim Cook as you suggested. You might have better luck printing it from Jim's computer.

HIGH-LEVEL WASTE ENGINEERING

WSRC-TR-96-0267
REVISION: 0

KEYWORDS:
Waste Characterization,
Tank Farms, Closure
Tank 20

RETENTION:
PERMANENT

CLASSIFICATION: U
Does not contain UCNI

ADC/RO

Characterization of Tank 20 Residual Waste

BY

P. D. d'ENTREMONT
J. R. HESTER

17 March 1997

P. D. d'Entremont, Author, HLWE — Date:

J. R. Hester, Author, HLWE — Date:

M. S. Hay, Technical Reviewer, SRTC-IWT — Date:

M. C. Chandler, Manager, HLW Engineering Support — Date:

B. L. Lewis, Manager, HLW Engineering Support — Date:

T. M. Monahon, Manager, HLW Engineering — Date:

Table of Contents

1. Introduction 3

2. Summary 3

3. Background 4

4. Estimating the Mass of Residual Waste 4
    4.1 Lifting Plates 5
    4.2 Estimating Sludge Volume 6
        4.2.1 Clean Regions 6
        4.2.2 Brown Solids 9
        4.2.3 White Solids 10

5. Waste Composition and Inventory 13
    5.1 Process Knowledge Estimates 14
        5.1.1 Chemical Contaminants 14
        5.1.2 Radionuclides 15
        5.1.3 Tc-99 15
    5.2 Samples 16
    5.3 Estimated Inventories 19
        5.3.1 Radionuclide Inventories 19
        5.3.2 Class C Calculation 20
        5.3.3 Chemical Inventories 21
    5.4 Other Contaminants 25

6. References 25

1. Introduction

Plans are to close Tank 20, a type IV Waste Tank in the F-area Tank Farm, by filling it with pumpable backfills. Most of the waste was removed from the Tank in 1988, so only residual waste remains. More details on the planned closure can be found in the Closure Plan for the HLW Tanks[1] and the specific closure module for Tank 20.[2]

To show that closure of the tanks is environmentally sound, a performance evaluation has been performed for Tank 20.[2] The performance evaluation projected the concentration of contaminants at various locations and times after closure.

This report documents the basis for the inventories of contaminants that were used in the Tank 20 performance evaluation.

2. Summary

Photographs of Tank 20 show that most of the tank is covered by a thin layer of brown solids. The volume of this solids layer is estimated to be approximately 1000 gallons, which is equivalent to about 1950 pounds of dried solids. The tank also contains a number of piles of white solids that have precipitated from the ballast water that has been left in the tank. The solids are a mixture of cryolite, sodium sulfate, and sludge. The volume of the white piles is estimated to be less than 50 gallons.

The composition of these two different types of solids has been estimated by two means: 1) predictions based on the knowledge that the material entering the tank was PUREX Low-Heat Waste, and 2) samples. The samples have shown that the predictions based on process knowledge were reasonable, although a few adjustments are in order. HLWE recommends that the process knowledge estimates of the inventory be used for all contaminants except for Tc-99 and Pu-238. For these two radionuclides, the inventory estimates should be raised to reflect what was learned from sample results.

The recommended inventories to be assumed for modeling purposes in Tank 20 are shown in Tables 1 and 2 at the end of the report.

The contaminants reported in Tables 1 and 2 are contained in the waste, which is primarily on the bottom of the tank. In addition, the risers on the top of the tank each contain lead. Based on the prints, a reasonable estimate is 500 pounds per riser, or 3000 pounds (1400 kg) of lead for the whole tank. Also, we recommend that an amount of waste be assumed to be outside of the tank to account for spills and other

equipment in the Tank 17-20 area, such as the 1F Evaporator and CTS. An allowance of 20% of the tank inventory in these four tanks should be sufficient to bound contributions from the other sources.

Plans are for the contaminants currently in Tank 20 to be left in the tank during the closure. However, if plans change, and more sludge is removed from Tank 20, the inventories of sludge and white solids should be re-evaluated to accurately estimate the inventory of contaminants.

3. Background

Tank 20 is a type IV waste tank in the F-area Tank Farm. The tank is an underground carbon steel waste tank, 85 feet in diameter, and has a working capacity of 1.3 million gallons. Tank 20 was placed into service in 1960 as an evaporator concentrate receipt tank. Concentrated waste in the form of saltcake was removed from the tank in several campaigns from 1980 to 1988. Waste removal, which included spray washing of the dome and sides with water, was completed in 1988.

A liquid heel of approximately 20,000 gallons of ballast water was added in 1990. The purpose of the heel was to prevent uplift of the bottom of the tank if water were to collect in the leak detection system underneath the tank. From 1990 to 1996, inhibitors (sodium nitrite and sodium hydroxide) were added to the tank to ensure that inhibitor concentrations stayed sufficiently high to prevent corrosion of the carbon steel wall.

4. Estimating the Mass of Residual Waste

Estimating the inventory of contaminants in Tank 20 required estimating 1) the mass of residual waste in the tank and 2) the concentration of contaminants in this waste. This section discusses the mass estimates. Section 5 discusses waste concentration estimates and inventories.

Photographs of the floor of Tank 20 taken after the ballast water was pumped out have shown that, except for a few small regions, the entire tank floor is covered by liquid approximately 1 inch high. The liquid is the remainder of the ballast water that was not picked up by the pump. Over the last 10 years, inhibitors have been added to protect the tank steel, so this ballast water contains inhibitors (sodium nitrite and sodium hydroxide) and other compounds that were in the waste, mainly sodium nitrate, carbonate, and sulfate.

Underneath the liquid are precipitated solids left after waste removal. Two areas of the tank appear to have no smearable solids (i.e. the floor of the tank as seen through the liquid appears to be clean). The rest of the tank contains predominantly brown solids, which have been shown to be similar in composition to PUREX low-heat waste sludge. The tank also contains a number of small deposits of white solids that have been shown to be primarily cryolite (see section 5.2, "Samples"). The mass of cryolite solids is small; however, because cryolite is over 50 wt% fluoride, these solids contribute significantly to the fluoride inventory in the tank.

The sections that follow describe the method of determining the volumes of precipitated solids in the tank.

4.1 Lifting Plates

The depth of the brown sludge on the floor of Tank 20 was estimated by observing the sludge relative to lifting plates that were placed on the tank floor during construction. The purpose of the plates was to allow the plates forming the floor of the tank to be butt-welded from both sides during construction. The procedure for constructing the tank bottom was as follows:

- The steel plates that formed the tank floor were placed on top of the concrete pad, the top half of all welds was completed, and the lifting plates with lugs were welded into place.
- Using a lifting frame (Print W164197, 2/16/56), the tank floor was lifted off the ground.
- The bottom half of each weld was completed by welders crawling underneath the lifted plates.
- The tank floor was lowered to the concrete pad, and the lifting lugs were ground off.

Although the lifting lugs were removed during construction, the lifting plates were left in place. Thus, they now provide convenient "depth gauges" for estimating the depth of solids on the tank floor.

Figure 1 shows the arrangement of lifting plates (print W164197). The lifting plates are 12 by 12 inches, 3/8 inches high, and have a 1/4-inch weld bead around their perimeter.

4.2 Estimating Sludge Volume

The depth of sludge at each point in the tank was estimated from photographs of the tank floor. Figure 2 shows the sludge and other equipment that was seen in the photographs. The photographs show a number of pieces of abandoned equipment in the tank, including a transfer jet, several pieces of rope, several pieces of conduit, and a number of steel tapes underneath the steel tape riser.

4.2.1 Clean Regions

The regions underneath the southwest and center risers have no smearable solids contamination. This conclusion is based on 1) photographs, which show what appears to be oxidizded tank steel in these locations, and 2) an unsuccessful attempt to swipe contamination underneath the southwest riser. The attempt was made with an absorbent swipe wrapped around a weight. Although the swipe was dragged across the bottom of the tank repeatedly, no visible solids were collected.

Photographs of the area underneath the southwest riser and the center riser show circular regions on the floor underneath the risers (HLW File Photograph 1028:25). The location of the regions under spray washing nozzles suggest that they are clean regions where the sludge has been swept away by the spray washing nozzles. The regions are light brown, approximately 15 feet across, and are noticeably lighter in color than other parts of the tank floor, which range in color from medium brown to dark brown. The tops of the lifting plates in the clean regions are approximately the same color as the floor, unlike other regions of the tank, where the lifting plates are lighter in color than the floor, presumably because the tops of the lifting plates have a thinner layer of sludge than the surrounding floor.

Also, the edges of the clean regions have a "spoke" pattern of short, clean lines radiating outward from the centers of the regions. The "spokes" average about a foot in length. The pattern is the cleaning pattern of the spray nozzle. Each pass of the rotary spray nozzle created another clean "spoke" in the pattern.

Figure 1. Tank 20 Top and Floor

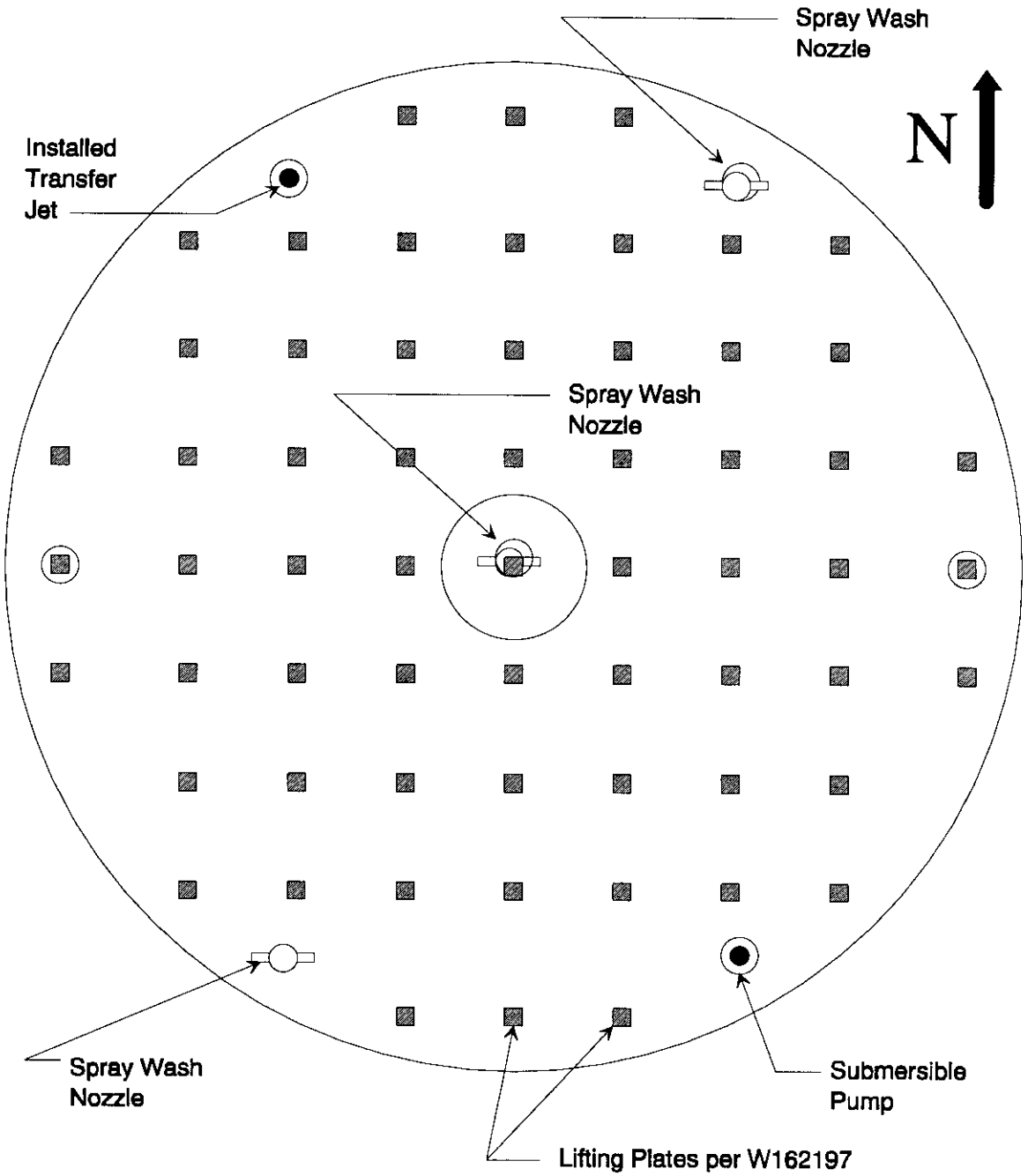

Figure 2. Sludge and Abandoned Equipment in Tank 20

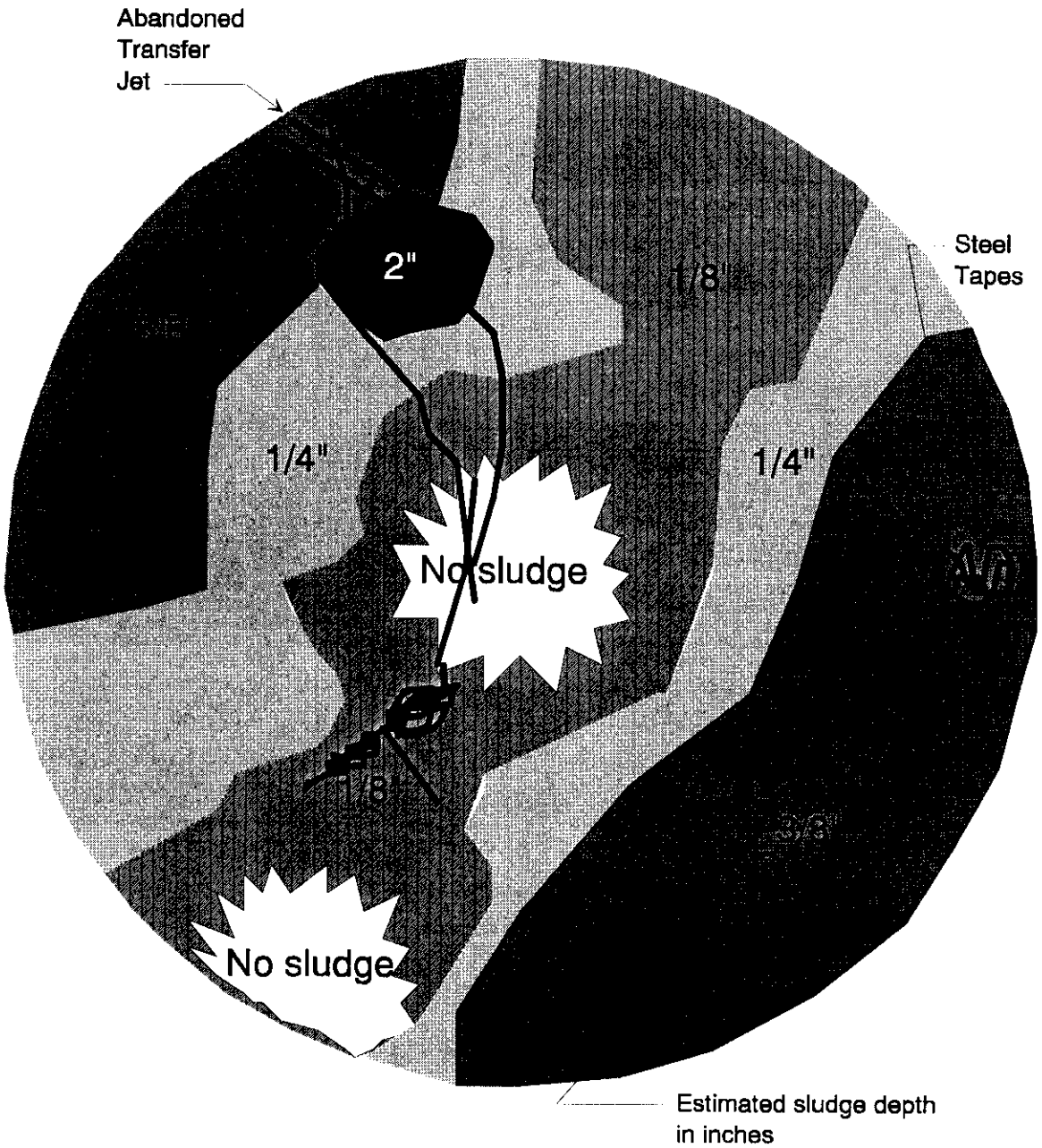

4.2.2 Brown Solids

As mentioned previously, most of the floor of the tank is covered by brown solids. The solids range from very thin (the areas immediately surrounding the clean regions) to a fraction of an inch (underneath the northwest and southeast risers). Also, there is an "island" near the northwest riser that sticks above the water level and has sludge that is noticeably deeper than the rest of the tank.

Figure 2 shows the estimated depths at each spot in the tank. In estimating depths, the following guidelines were used:

- The light brown regions under the southwest and center spray wash nozzles were estimated to have no sludge, as explained in the previous section.
- In places where some sludge was evident on the floor (darker brown than the clean regions) but the tops of the lifting plates appeared to be free of sludge (as evidenced by the same light brown color as the clean regions), the sludge depth was estimated to be less than 1/8 inch sludge. Several plates with this appearance are located immediately at the periphery of the clean zones, indicating that this appearance signifies a thin layer of sludge.
- In places where the lifting plates were a darker color than the clear regions but are still noticeably lighter than the surrounding sludge, the sludge depth was estimated to be 1/4 inch of sludge. The depth in this region is obviously higher than the thin region (1/8 inch) but lower than the top of the lifting plate (3/8 inch), which is the basis for the estimate of 1/4 inch.
- In places where the lifting plates were not visible or only barely visible the sludge depth was estimated as 3/8 inch of sludge or more. In these places, the sludge has evidently partially covered or completely covered the lifting plates, which are 3/8 inch in height.
- The "island" between NW and NE risers was estimated as having 2 inches of sludge. In photographs taken immediately after the first pump-out operation, when the liquid level was about 1 1/2 inches, this region appeared to rise only slightly from the liquid.

The areas of the regions identified in Figure 2 were estimated using a manual grid technique, in which each region was overlaid with a grid pattern of known size. The number of grid squares within each region was manually counted, and the area of the region was estimated by multiplying the number of squares by the size of each square. The estimated areas of each region were then multiplied by the estimated depth to obtain an estimate of the volume of sludge in each region. The estimated volumes were then summed.

Results were as follows:

Sludge Depth (in.)	Estimated Area (Square feet)	Estimated Volume (cubic feet)	Estimated Volume (gallons)
0	369	0	0
0.125	1557	16	121
0.25	1475	31	230
0.375	2151	67	503
2	123	20	153
Totals	5675	135	1007

This is the basis for the estimate that the volume of sludge solids in Tank 20 is about 1000 gallons.

Previous studies have demonstrated that there are approximately 1.95 pounds of dry sludge solids per gallons of settled sludge.[3] The solids density of the solids in the bottom of Tank 20 is not known, but it is expected that the density of a thin layer of solids left after waste removal should be less than deep sludge in a waste tank, which is compacted due to compressive settling. Therefore, 1.95 pounds of dry sludge solids per gallon is probably a reasonable upper bound for the solids density in Tank 20. This is equivalent to an estimated 1,950 pounds of dry sludge solids in Tank 20.

4.2.3 White Solids

In addition to the brown solids in Tank 20, the tank also contained a number of piles of white solids. The piles have been determined to be primarily cryolite and sodium sulfate (see "Samples" section). Figure 3 shows the locations of the piles of white solids in Tank 20 as recorded in file photographs 1028:24 through 1028:29. At the time the photographs were taken, there were ten piles of white solids in the tank. The size of the white piles was significantly reduced between the initial inspection of the tank and later inspections.

Figure 3.
Location of White Solids

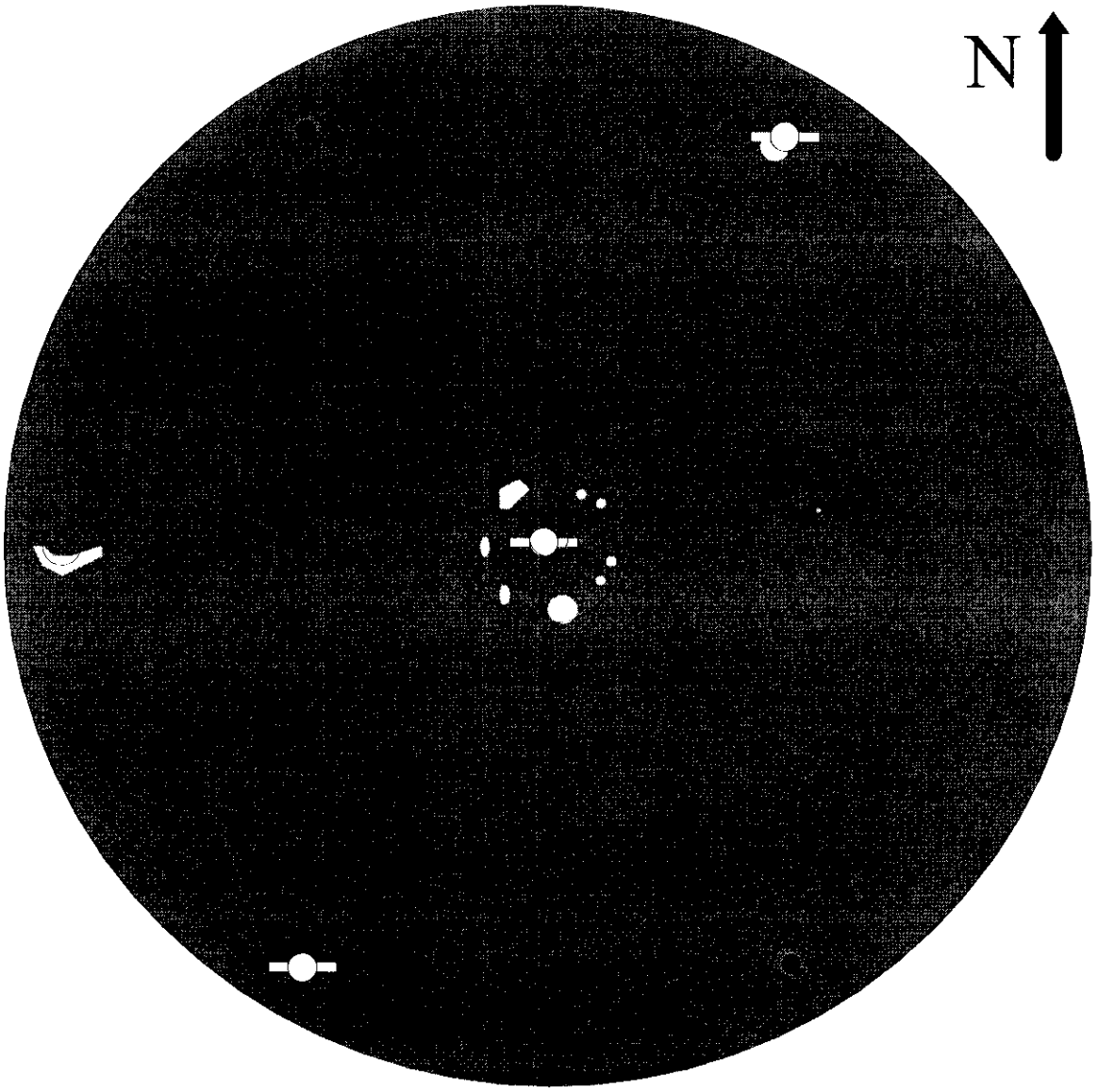

The location of the piles and the fact that they decreased in size between the two inspections suggests that they were formed in locations where rainwater dripped into the tank. Each of the piles is at a spot below a riser where water could have dripped into the tank. The piles underneath the center riser are near the periphery of the riser, where the riser plugs meets the riser, which is the location that rainwater could leak in. Also, inspections of the center riser show small "stalactites," perhaps a couple of inches long at the bottom of the riser, confirming that liquid entered the tank through this riser. Such stalactites are routinely found in the tank farm underneath risers that have experienced rainwater inleakage. There are also piles of white solids underneath the slurry pump in the west riser and the spray wash jet in the northeast riser; both are spots where water could leak in the tank.

Further evidence that dripping caused the piles is the appearance of the piles at the time during the second inspection. A number of piles had localized craters, which appear to have been formed when liquid dripped into the pile and dissolved the white solids. There were hard rains between the two inspections, which is consistent with the hypothesis that rainwater leaking in caused the craters.

The main compound in these piles was identified to be cryolite (See section 5.2, "Samples"). The evidence suggests that this compound became supersaturated in the ballast water. Between 1990 and 1996, the sodium concentration in the tank climbed slowly as sodium hydroxide and sodium nitrite were added to maintain inhibitor concentrations in the tank. Apparently, at some time during this period the solution exceeded the solubility product for cryolite, became supersaturated in cryolite, and the cryolite precipitated. The location of the piles suggests that they precipitated in spots where the solution was disturbed by dripping water. When the ballast water was pumped out the tank, and the piles were exposed to unsaturated rainwater, the solids dissolved.

The volume of white solids in the tank is estimated to be less than 50 gallons, with a total dry solids weight of less than 100 pounds. This estimate was derived as follows. The seven piles of solids underneath the center riser are all estimated to be much less than 2 feet in diameter and 4 inches tall. The piles underneath the northeast riser and the west riser are larger than the piles underneath the center riser, but the volume of all of the piles can be conservatively estimated as 10 piles of solids with a diameter of 2 feet and height of 4 inches. For the purposes of estimation, the surface of the pile is assumed to be roughly spherical in shape. The volume of a spherical section with a height of 4 inches and a circular base two feet in diameter is computed as follows:

Volume of a Spherical Dome = $\pi \cdot h \cdot \left(\frac{c^2}{8} - \frac{h^2}{6} \right)$ Reference: Machinery's Handbook, p. 162

Where: c = diameter of the base of the dome (2 feet)
h = height of the dome (4")

$$\pi \cdot \left(\frac{4}{12} \cdot ft \right) \cdot \left[\frac{(2 \cdot ft)^2}{8} - \frac{\left(\frac{4}{12} \cdot ft \right)^2}{6} \right] = 0.543 \cdot ft^3$$

This is equivalent to about 4 gallons per pile, or, conservatively, about 50 gallons for 10 piles. Assuming that the material has the same density as ordinary sludge (1.95 pounds of dried solid per gallon of settled sludge), this is approximately 100 pounds of dry white solids in the tank.

5. Waste Composition and Inventory

As mentioned previously, most of the solids in Tank 20 appear to be sludge solids, even though the tank was never a sludge receiver. Apparently, the sludge entered the tank entrained in the concentrated salt solution. Previous samples of supernate and salt have shown that all supernate and salt contains small quantities of sludge that have not completely settled out of the liquid.[4] When supernate is evaporated, the entrained sludge is carried into the evaporator system and is deposited into the concentrate receiver tank.

The residual waste at the bottom of a waste tank (either a sludge tank or salt tank) at the end of waste removal is always expected to be primarily sludge. The concentration of entrained sludge in salt, as deposited by evaporation, is small. However, the sludge in a salt tank will be concentrated during waste removal. The reason for this is that hydraulic slurrying techniques are more effective at removing salt than sludge. Salt readily dissolves and is easily removed from the tank. Sludge is not soluble, and so it must be suspended by the slurry pumps. Even if the sludge can be completely suspended, when the sludge slurry is pumped from the tank it begins to settle when the slurry pumps are turned off (The slurry pumps must be turned off during transfers to prevent the pumps from sucking air, which causes accelerated wear). Thus, no matter how good the suspension, some sludge is always left behind at the end of the transfer. If the slurry pumps are not able to suspend some spots in the tank, due to their distance from the pumps, then even more sludge is left in these spots.

5.1 Process Knowledge Estimates

Estimates of the residual sludge in Tank 20 were derived from the Waste Characterization System (WCS).[5]

The estimated composition of Tank 19 sludge was used as the estimate for the composition of the residual sludge in Tank 20. As explained in the previous section, the sludge in Tank 20 probably entered the tank entrained in supernate that passed through the evaporator system. Tank 19 received sludge derived from the same type of waste (Purex low-heat waste) as in Tank 20. Therefore, the composition of sludge in both tanks should be similar, and the estimated composition of Tank 19 sludge, which has been derived from production records, is a reasonable estimate of the residual sludge composition in Tank 20.

The inventories and compositions of major sludge constituents in WCS are based on tank fill histories. WCS sludge inventories are based on sludge transfers from the canyons to the tank farms and between tanks. WCS contains the following information about each sludge transfer:

- Date
- Source - canyon or tank
- Destination - tank
- Process - PUREX or H Modified (HM)
- Stream - High Heat Waste (HHW), Low Heat Waste (LHW), or Mixed
- Volume
- Major chemical compound weights - Fe(OH)3, NaAlO2, Ni(OH)2, and MnO2
- Major actinide weights - Th-232, U-233, U-234, U-235, U-236, U-238, Np-237, Pu-238, Pu-239, Pu-240, Pu-241, and Pu-242

5.1.1 Chemical Contaminants

For each transfer, WCS keeps track of which tank received the waste and how much of each compound was in the transfer. For major chemical compounds (the four listed above) the information comes directly from canyon records. These four compounds account for about 80% of the weight of SRS sludge. The minor compounds are estimated by multiplying the weight of Fe(OH)3 by the flowsheet ratio of that constituent to Fe(OH)3. WCS computes the inventory of chemical contaminants that were received in each waste tank by simply summing up the quantity of chemicals in each transfer.

To determine the concentration of each compound, the inventory of that compound is divided by the calculated total mass of sludge in the waste tank. In the case of Tank 20, the concentration of each compound in the Tank 19 sludge was computed. These concentrations were then multiplied by the estimated mass of sludge in Tank 20 (1950 pounds) to derive an estimate of the total chemical inventory in the tank, which is reported in Table 2.

5.1.2 Radionuclides

The radionuclide inventory was estimated only for the sludge because the primary salt radionuclide, Cs-137, would have been preferentially washed out during spray washing.

WCS computes the inventory of fission and activation products (H-3 through Eu-155 in Table 1) using concentrations based on yield distributions in SRS reactor assemblies and solubility data. The concentrations predicted by WCS were used to estimate the inventory in Tank 20, with the exception of Tc-99, which is discussed in the section below.

WCS computes the inventory of sludge actinides (U-232 through Cm-245 in Table 1) using a combination of techniques used for chemicals and fission and activation products. The mass of major actinides in each transfer are known from canyon accountability records or process records. The concentration of minor actinides was estimated from yield distributions in SRS reactor assemblies.

Similar to the treatment for chemical constituents, the concentration of each radionuclide in Tank 20 was computed by dividing the estimated inventory in Tank 19 by the estimated total mass of sludge in Tank 19. Each of these concentrations was them multiplied by the estimated mass of sludge remaining in Tank 20 to derive the inventories that are reported in Table 1.

5.1.3 Tc-99

The process knowledge inventory reported in Table 1 for Tc-99 is based on a concentration that is 13.5 times the concentration reported by WCS. This is the only nuclide for which the process knowledge concentration has been adjusted. The value for this radionuclide was adjusted for two reasons:

- The performance evaluation predicts that the dose at the seepline will be predominantly due to Tc-99. Therefore, it is important to estimate this radionuclide conservatively.

- Sample results indicate that the concentration of Tc-99 in the residual sludge in Tank 20 is elevated relative to the concentration predicted by WCS for the bulk sludge. In particular, the ratio of Tc-99 to iron (iron is an indicator for sludge) is extremely high in the white deposits in Tank 20. The presence of highly enriched Tc-99 in these deposits suggests that the Tc-99 might have precipitated in the cryolite, so that the residual deposits have a higher amount of Tc-99 than the bulk sludge.

The adjustment factor of 13.5 was chosen in September 1996. At that time the Tc-99 concentration predicted for Tank 20 by process knowledge was 6.95 E-05 Ci/kg, whereas the measured concentration in the Tank 20 sludge is 0.94 microCi/gm, which is equivalent to 9.4 E-04 Ci/kg.[6] Since that time, the process knowledge estimate has changed slightly due to refinements in the method of calculation. WCS currently predicts that the sludge in Tank 20 should have a concentration of 6.252 E-05 Ci of Tc-99 per kg. Thus, the appropriate adjustment factor to be used in the performance evaluation should have been be 15 (9.2 E-04 divided by 6.252 E-05), about 11% higher. However, the error introduced by using the old adjustment factor is small, and there are no plans to revise the Tank 20 performance evaluation.

5.2 Samples

There were four sampling attempts made in Tank 20 to validate the estimates obtained from process knowledge. For the purposes of this report, the samples will be referred to as Samples 1, 2, 3, 4. The location that each of these samples is indicated in Figure 4. The samples were as follows.

Sample	Location	Description
1	Southeast riser	Mudsnapper* sample of white solids underneath riser
2	Southeast riser	Absorbent swipe of brown solids a few inches northwest of riser
3	Southwest riser	Absorbent swipe of bottom. No solids were collected on the swipe
4	North of Southwest riser	Scrape sample of brown solids to the north of the riser

*The mudsnapper was a spring-loaded, clam-shell sampler that was used to collect thick solids beneath the southeast riser.

Each of these samples was transported to SRTC for analysis. The analyses performed and results are documented in Reference 7.

A summary of the sample results is as follows:

Sample 1 was a mixture of cryolite, sodium sulfate, and sludge. The cryolite (Na_3AlF_6), which comprises about 60% of the sample, was identified by X-ray diffraction. Also the ratio of Al to F in the sample is consistent with the formula for cryolite, although the sample has an excess of sodium relative to Al and F. Excess sodium is to be expected because sodium is also the main cation for the other anions found in the sample.

As mentioned previously, the cryolite was deposited in locations where water dripped into the tank. Apparently, the solution in the tank became supersaturated with cryolite because of sodium additions. The location of the piles suggests that they precipitated in spots where the solution was disturbed by dripping water.

Figure 4
Locations of Samples from Tank 20

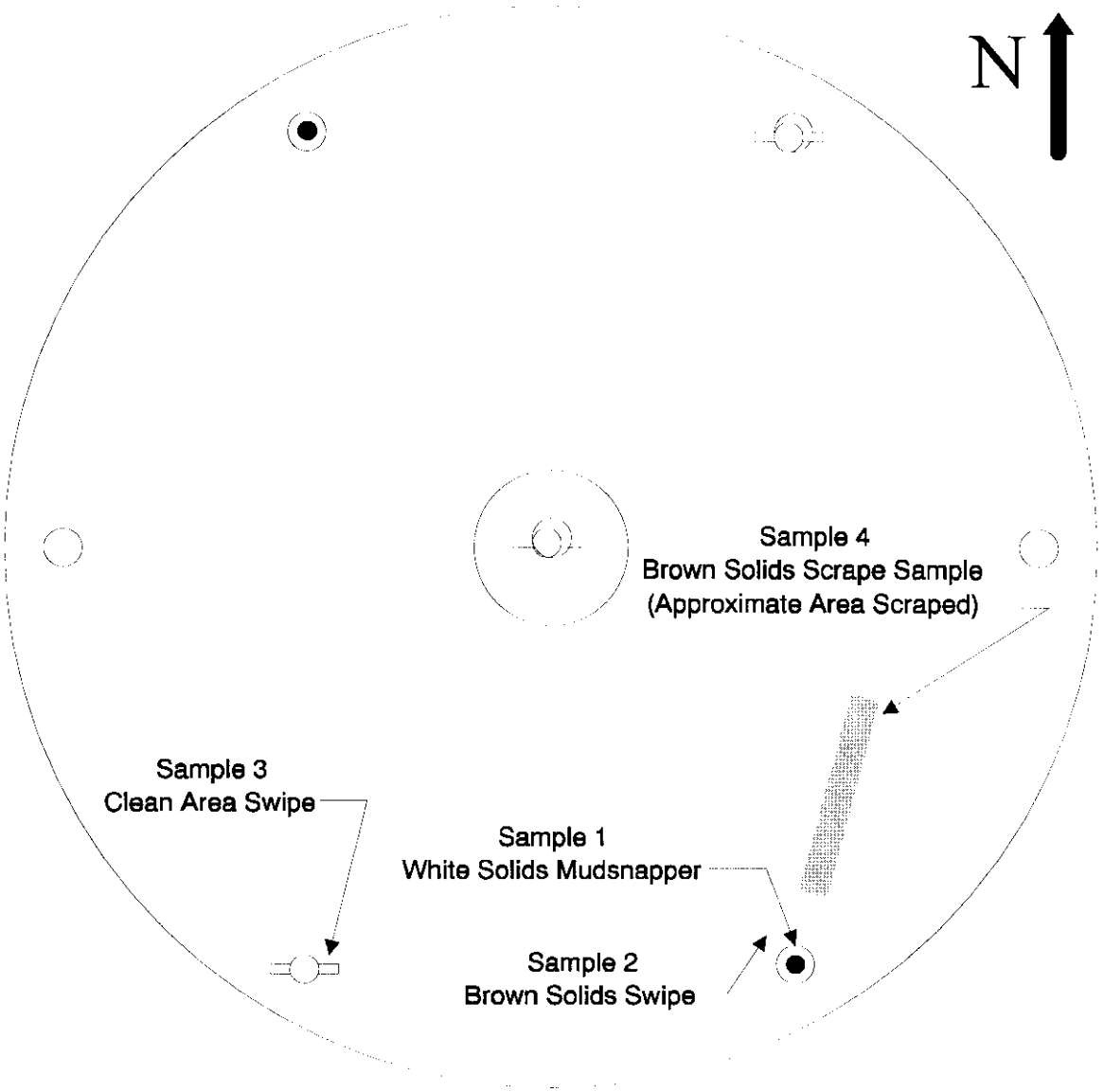

Sample 2 was a swipe of the brown solids. It was not possible to quantitatively analyze the sample because the sample was entrained in the swipe material. Therefore, the entire swipe was dissolved in aqua regia, so it was not possible to measure the actual weight of the dry solids collected. The ratios of sludge constituents were compared to ratios in known sludge and shown to be comparable,[7] but no quantitative information on contaminant concentration was obtained from this sample.

Sample 3 had no observable solids (because the area underneath the southwest riser is clean) and was not analyzed.

Sample 4 was a sample of brown solids that was scraped from the floor. The composition of the sample was similar to sludge, although it also contained about 8% sulfate and 15% oxalate, which is not characteristic of sludge. Apparently, these two salts precipitated out of the ballast water. The sample results are shown in Tables 1 and 2.

5.3 Estimated Inventories

The estimated inventories of contaminants in Tank 20 are reported in Tables 1 and 2.

5.3.1 Radionuclide Inventories

Table 1 shows the radionuclide contaminants. Columns 2 and 3 show the inventories predicted from process knowledge, as discussed previously. Columns 4 and 6 show the concentrations in Samples 1 and 4, respectively. Column 8 shows the inventory predicted from sample results, using the assumption of 50 gallons of white solids and 1000 gallons of brown solids.

The predicted inventory of Se-79, 0.003 Ci, is below the detection limit for Se-79, so the result of less than 0.9 microcuries per gram was expected. However, Se-79 is a fission product, so the inventory predicted from fission product yields should be reasonably accurate.

The inventories of Cs-137 and Pu-239 were below the predictions.

Tc-99, Pu-238, and Np-237 were notably higher than predictions. As noted previous, the concentration of Tc-99 was sufficiently high that the process knowledge estimate was adjusted upward by a factor of 13.5.

Eight curies of Pu-238 were found in Tank 20, although none were predicted. Production records do not indicate that any Pu-238 went to Tank 20, which contains Purex Low-Heat Waste. It had long been recognized that some small amount of Pu-238 would be present in Purex Low-Heat Waste, but the amount was expected to be small enough to be neglected. The sample result from Tank 20 shows that this assumption is not correct, because Pu-238 is, in fact, the alpha radionuclide that is present in highest concentration.

For the performance evaluation, Pu-238 is not a concern because it is relatively immobile in the environment and has a half life of only 86 years. Therefore, virtually no Pu-238 will travel through the environment and outcrop at the seepline. However, the Pu-238 is a concern because of its Class C implications (see next section). Plans are to revise the assumptions in the WCS to specify that some fraction of the Pu-238 goes to Low-Heat Waste.

The last nuclide that occurred higher than its predicted concentration was Np-237. Similar to Pu-238, Np-237 was thought to be present in low enough concentrations that it could be neglected. The inventory estimated of Np-237 in Tank 20, 5.5 E-04 Ci, is low. However, of the nuclides of concern in Tank 20, Np-237 is unique in that it has a high ingestion dose conversion factor, a long half life, and travels through the environment relatively easily (Most nuclides with high dose conversion factors, such as Pu-239, are relatively immobile). Therefore, it is important to estimate Np-237 conservatively.

For the purposes of Tank 20, Np-237 can be neglected. For example, a performance evaluation was done for Tank 17, which has about 20 times the Np-237 as Tank 20 (The estimated quantity is 0.013 Ci in Tank 17). The Tank 17 performance evaluation showed the concentration at the seepline to be a small fraction of the limit for alpha-emitting nuclides. Therefore, there are no plans to revise the performance evaluation for Tank 20. However, as a result of the discovery of Np-237 in Tank 20 and 17, plans are to revise the WCS to account for Np-237 in Low-Heat Waste. It appears likely that Np-237 may be a significant dose contributor to the performance evaluation for some tanks.

5.3.2 Class C Calculation

The rightmost five columns of Table 1 include a Class C calculation for the waste in Tank 20. The column entitled "Class C Upper Limit" shows the Class C limit for each radionuclide. The units for the value in the column are shown in the next column, entitled "Class C Units." The next column, "Tank 20 Concentration in Class Units,"

shows the computed concentration of the Tank 20 sludge converted to the appropriate units.

In the column "Factor relative to Class C Limit" the computed concentration in Tank 20 is divided by the limit to obtain a Class C factor for each radionuclide. To be within the Class C designation the sum of all of these factors must be less than or equal to 1. As can be seen from the sum at the bottom of the column, the sludge in Tank 20 is currently 174 times the upper limit for Class C.

The last column, "Factor with 7.196 inches of backfill," shows the factors if one takes credit for the mass of 7.196 inches of grout covering the entire tank floor in computing the radionuclide concentration. The grout is assumed to have a specific gravity of 1.6, which is equivalent to light CLSM. Plans are to pour reducing grout in Tank 20, which has a specific gravity of 2.4, so this calculation incorporates a safety factor of 50%. As can be seen from the summation at the bottom of the column, 7.2 inches of grout is sufficient to bring the sum of the Class C factors down to 1.000. Thus, if one takes credit for the mass of 7.2 inches or more of grout covering the entire tank floor, the concentration of the waste plus grout in Tank 20 will be less than the upper limit for Class C.

5.3.3 Chemical Inventories

Table 2 shows the chemical contaminants. Column 2 shows the inventories predicted by WCS. Also shown are the concentrations measured in the tank, and the estimated inventories based on the samples.

Table 1
Radionuclide Inventories in Tank 20 Solids

Nuclide	Concentra-tion from WCS (10/31/96) (Ci/kg)	Tank Inventory based on 1000 gal	Sample 1 Mudsnap-per white solids (microCi/gm)	Inventory based on 50 gal of white solids (Ci)	Sample 4 Scrape Sample of brown solids (microCi/gm)	Inventory based on 1000 gal of brown solids (Ci)	Total inventory estimated from Samples (Ci)	Conserv-ative Estimate (Highest of WCS and samples) (Ci)	Class C Upper Limit	Class C Units	Tank 20 concentratio n in Class C units	Factor Relative to Class C limit	Factor with 7.196 inches of backfill (SpG=1.6)
H-3	0.00E+00	0.00E+00						0	None	NA			
C-14	7.411E-07	6.56E-04						6.6E-04	8.000E+00	Ci/m^3	0.00017	2.16E-05	8.5E-07
Ni-59	4.357E-05	3.85E-02						3.9E-02	2.200E+02	Ci/m^3	0.010	4.62E-05	1.817E-06
Co-60	7.552E-04	6.68E-01	0.1	0.0044	0.116	0.103	0.107	6.7E-01	None	NA			
Se-79	3.604E-06	3.19E-03	<0.9	<0.04				3.2E-03	None	NA			
Sr-90	2.148E-01	1.90E+02	12.8	0.567	44.6	39.5	40.1	1.9E+02	7.000E+03	Ci/m^3	50.2	0.00717	0.0002816
Y-90	2.148E-01	1.90E+02						1.9E+02	None	NA			
Tc-99	6.252E-05	*7.47E-01	0.34	0.0151	0.94	0.83	0.85	8.5E-01	3.000E+00	Ci/m^3	0.22	0.0747	0.0029331
Ru-106	4.889E-07	4.32E-04						4.3E-04	None	NA			
Rh-106	4.889E-07	4.32E-04						4.3E-04	None	NA			
Sb-125	5.118E-04	4.53E-01						4.5E-01	None	NA			
Sn-126	6.696E-06	5.92E-03						5.9E-03	None	NA			
I-129	2.967E-10	2.62E-07						2.6E-07	8.000E-02	Ci/m^3	6.93E-08	8.66E-07	3.403E-08
Cs-134	2.274E-06	2.01E-03						2.0E-03	None	NA			
Cs-135	4.126E-08	3.65E-05						3.6E-05	None	NA			
Cs-137	1.478E-02	1.31E+01	37.6	1.666	44.3	39.3	40.9	4.1E+01	4.600E+03	Ci/m^3	10.83	0.0023	9.246E-05
Ce-144	1.994E-08	1.76E-05						1.8E-05	None	NA			

* The inventory reported for Tc-99 is computed assuming a concentration 13.5 times that reported in WCS. See section 5.3, "Tc-99."

Table 1 Continued
Radionuclide Inventories in Tank 20 Solids

Nuclide	Concentration from WCS (10/31/96) (Ci/kg)	Tank Inventory based on 1000 gal	Sample 1 Mudsnapper white solids (microCi/gm)	Inventory based on 50 gal of white solids (Ci)	Sample 4 Scrape Sample of brown solids (microCi/gm)	Inventory based on 1000 gal of brown solids (Ci)	Total inventory estimated from Samples (Ci)	Conservative Estimate (Highest of WCS and samples) (Ci)	Class C Upper Limit	Class C Units	Tank 20 concentration in Class C units	Factor Relative to Class C limit	Factor with 7.196 inches of backfill (SpG=1.6)
Pr-144	1.994E-08	1.76E-05						1.8E-05	None	NA			
Pm-147	8.666E-03	7.66E+00						7.7E+00	None	NA			
Eu-154	1.167E-03	1.03E+00	<0.3	<0.01				1.0E+00	None	NA			
Eu-155	0.00E+00	0.00E+00						0.0E+00	None	NA			
U-232	1.149E-08	1.02E-05						1.0E-05	100	nCi/gm	0.011	0.00011	6.59E-07
U-233	0.00E+00	0.00E+00						0.0E+00	100	nCi/gm	0	0	
U-234	0.00E+00	0.00E+00						0.0E+00	100	nCi/gm	0	0	
U-235	7.235E-08	6.40E-05	8.30E-06	3.68E-07	2.10E-05	1.86E-05	1.90E-05	6.4E-05	100	nCi/gm	0.072	0.000724	4.149E-06
U-236	0.00E+00	0.00E+00	1.30E-05	5.76E-07	3.00E-05	2.66E-05	2.72E-05	2.7E-05	100	nCi/gm	0.03	0.00031	1.761E-06
U-238	6.609E-06	5.85E-03	2.40E-04	1.06E-05	6.17E-04	5.47E-04	5.58E-04	5.8E-03	100	nCi/gm	6.6	0.066	0.000379
Np-237	0.00E+00	0.00E+00	0.0038	1.68E-04	6.18E-04	5.48E-04	5.48E-04	7.16E-04	100	nCi/gm	0	0	0
Pu-238	0.00E+00	0.00E+00			8.3	7.36E+00	7.356818	8	100	nCi/gm	9025	90.26	0.5186632
Pu-239	3.872E-03	3.42E+00	0.44	0.0195	0.941	0.834068	0.853568	3.5	100	nCi/gm	3950	39.48	0.2269152
Pu-240	8.639E-04	7.64E-01			0.2	1.77E-01	0.177273	7.64E-01	100	nCi/gm	862	8.62	0.0495417
Pu-241	5.625E-02	4.98E+01						5.0E+01	3500	nCi/gm	56100	16.04	0.0921653
Pu-242	1.782E-06	1.58E-03						1.6E-03	100	nCi/gm	1.778	0.017	0.0001022
Am-241	0.00E+00	0.00E+00			1.9	1.68E+00	1.684091	1.7E+00	100	nCi/gm	1895	18.95	0.1089193
Cm-244	1.954E-07	1.73E-04						1.7E-04	100	nCi/gm	0.195	0.0020	1.121E-05
Cm-245	1.032E-13	9.13E-11						9.1E-11	100	nCi/gm	1.03E-07	1.03E-09	5.919E-12
Total alpha emitting nuclides with half lives greater than 5 years								1.4E+01					
									Sum of Class C Factors			174	1.0000

Table 2
Chemical Inventories in Tank 20 Solids

	Inventory from WCS (10/31/96) based on 1000 gal (kg)	Sample 1 Mudsnapper White Solids (wt%)	Estimated White solids Inventory Based on 50 gal (kg)	Sample 4 Scrape Brown solids (wt%)	Estimated Brown solids Inventory Based on 1000 gal (kg)	Estimated Total Inventory based on samples (kg)
			50.0		1000.0	
Silver	3.068375	<0.02				
Aluminum	50.86222	8.2	3.6	3.0	26.9	30.5
Barium	1.789763					
Fluoride	1.619407	33.0	14.6	1.0	8.9	23.5
Chromium	2.159336	0.1	0.0	0.3	2.5	2.5
Copper	1.53426	0.0	0.0			0.0
Iron	247.4876	2.7	1.2	7.9	70.0	71.2
Mercury	0.630674					
Nitrate	16.62612					
Manganese	11.41312	0.4	0.2	1.3	11.7	11.9
Nickel	0	0.0	0.0	0.1	0.8	0.8
Lead	2.556964	<0.05				0.0
Uranium	17.41831					
Zinc	3.067194					
Sodium	33.8	30.0	13.3	27.8	246.4	259.7
Silicon	7.6	0.8	0.3	0.5	4.8	5.2
Boron		<0.02				
Calcium	22.5	0.5	0.2	1.4	12.2	12.4
Lithium		<0.008				
Magnesium	0.7	0.1	0.1	0.5	4.3	4.3
Molybdenum		<0.003				
Titanium		<0.005		0.0	0.1	0.1
Zirconium	4.4	<0.019				
Cadmium		0.1	0.0	0.2	1.7	1.8
Phosphate	1.0	0.1	0.1			0.1
Chloride	10.8					
Sulfate	6.1	13.0	5.8	8.0	70.9	76.7
Oxalate	0.0			15.0	133.0	133.0

5.4 Other Contaminants

The risers in Tank 20 contain lead, which was intended to act as radiation shielding. Plans are to leave these risers in place when the tank is closed. The estimated mass of lead is approximated 500 pounds per riser. There are six risers on the tank, for an estimated total of 3000 pounds of lead.

In addition to the contaminants in Tanks 17-20, there will be contamination in other equipment in the area, such as the 1F Evaporator, the 1F Concentration Transfer System, ventilation systems, and transfer piping. The inventory of contaminants in these locations is expected to be small relative to the amount of contamination in the tanks.

To account for contamination outside of the tank, we recommend that an inventory of contaminants equal to 20% of the waste inside the tank be added to the performance evaluation for each waste tank (i.e. performance modeling of the Tank 17-20 area should add 20% of the inventory in these four tanks). Based on engineering judgment, this 20% should bound the contamination in these locations. As closure modules are prepared for these locations, the modules will show that the contamination left behind is smaller than this estimate, or the estimate will be revised and the performance evaluation repeated.

6. References

[1] "Industrial Wastewater Closure Plan for F- and H-Area High-Level Waste Tanks," Rev. 1, 10 July 1996

[2] "Industrial Wastewater Closure Module for the High-Level Waste Tank 20 System," Rev. 1, 8 January 1997

[3] L. F. Landon and T. T. Thompson, "Technical Data Summary for the Defense Waste Processing Facility, Stage 2," DPSTD-80-39-2, December 1980

[4] J. R. Fowler, "Analysis of Tank 20 Saltcake," DPST-80-424, 16 June 1980

[5] J. R. Hester, "High Level Waste Characterization System," WSRC-TR-96-0264, December 1996

[6] P. D. d'Entremont and D. T. Bignell, "Options for Meeting Class C Criteria During HLW Tank Closure," WSRC-TR-96-0327, 16 October 1996

[7] M. S. Hay, "Analysis of Samples for Tank 20 Closure," WSRC-TR-97-XXXX (in draft)

HLWMD
High Level Waste Tank Closure Program

WSRC
Environmental Advisory Board Meeting
February 26, 1997

Jeffry L. Newman
HLW Environmental Programs
208-8659
725-PAGE (#3097)

INTRODUCTION

With DWPF Started, Now Focus is on Waste Removal and Tank Closure

Completed:

1) Regulator Approval of High Level Waste Tank Closure Plan in July, 1996
2) Decision on Environmental Assessment (NEPA) in July, 1996
3) Develop HLW Tank Closure Program Plan in December, 1996
4) Regulator approval of Tank 20 Closure "Module" in January, 1997

Goal:

1) Close Tanks 20 and 17 by July, 1997

Regulatory Overview

- 51 HLW Tanks
- Tanks Permitted Under an Industrial Wastewater Operating Permit in Accordance with Wastewater Regulation R.61-82 and Pollution Control Act
- Wastewater Closure Plan Approval by SCDHEC & EPA Required
- Performed Environmental Assessment for NEPA
- Public Involvement

Compliance Strategy

- Identify Regulatory Requirements (ARARs)
- Develop Performance Objectives from ARARs
- Identify Closure Alternatives
- Model Remaining Source Term (After Waste Removal)
- Evaluate Model Results Against Closure Alternatives
- Close Tanks When Protective of Human Health and the Environment

Proposed End State

- Tank Filled with a Pumpable, Self-Leveling Backfill Material
- Tank Top Structures and Equipment Disconnected But Left in Place
- When Group of Tanks Closed, CERCLA Evaluation Conducted
- Possible Clay Cap Required for Area Closure

General Approach

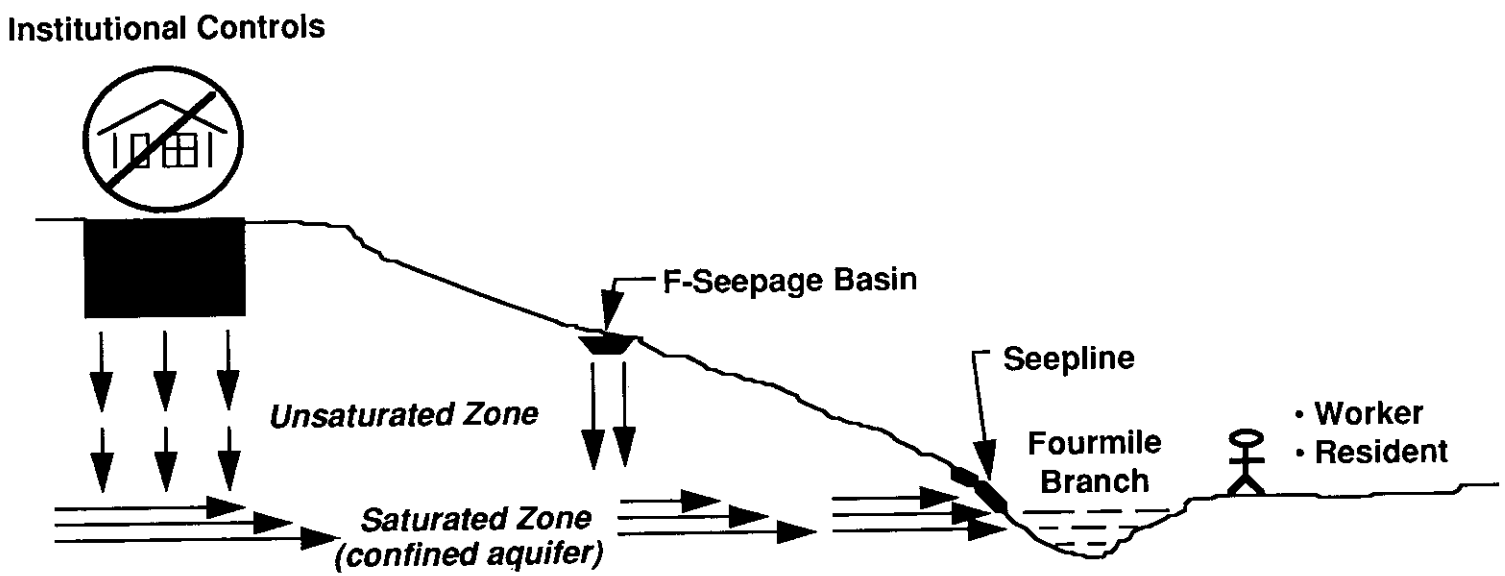

<u>Performance Objectives</u>

- Point of Compliance - Seepline & Fourmile Branch
- Fourmile Branch - Aquatic Stream Standards
- Seepline - 4 mrem/yr (Drinking Water Standards)
- All Pathways - 15 mrem/yr

HLWMD
High Level Waste Tank Closure Program

WSRC

Environmental Advisory Board Meeting

May 8, 1996

Jeffry L. Newman
HLW Environmental Programs
208-8659
725-PAGE (#3097)

INTRODUCTION

With DWPF Started, Now Focus is on Waste Removal and Tank Closure

Goals:

1) Regulator Approval of High Level Waste Tank Closure Plan by July, 1996
2) Decision on Environmental Assessment (NEPA) by July, 1996
3) Close a HLW Tank by December, 1996

Regulatory Overview

- 51 HLW Tanks
- Tanks Permitted Under an Industrial Wastewater Operating Permit in Accordance with Wastewater Regulation R.61-82 and Pollution Control Act
- Wastewater Closure Plan Approval by SCDHEC & EPA Required
- Performing Environmental Assessment for NEPA
- Public Involvement

Compliance Strategy

- Identify Regulatory Requirements (ARARs)
- Develop Performance Objectives from ARARs
- Identify Closure Alternatives
- Model Remaining Source Term (After Waste Removal)
- Evaluate Model Results Against Closure Alternatives
- Close Tanks When Protective of Human Health and the Environment

Proposed End State

- Tank Filled with a Pumpable, Self-Leveling Backfill Material
- Tank Top Structures and Equipment Disconnected But Left in Place
- When Group of Tanks Closed, CERCLA Evaluation Conducted
- Possible Clay Cap Required for Area Closure

OSR 3-4A-W (Rev1-89)

WESTINGHOUSE SAVANNAH RIVER COMPANY

INTER-OFFICE MEMORANDUM

OPS-WMT-900557
KEY WORDS
Waste Management
Permitting

June 15, 1990

TO: W. D. Dunaway, 703-18A

FROM: J. A. Pike, 703-H JP

F and H Area Tank Farm Wastewater Permit Application Permitting Status Report to SCDHEC

Would you please arrange for transmittal of the attached information to Nancy Weatherup of SCDHEC for her concurrence.

During a phone conference on June 1, 1990, concerning the Federal Facilities Agreement (FFA) among SCDHEC, EPA, and DOE; Nancy Weatherup of SCDHEC requested SRS to submit list of new facilities on the high-level waste tank farms. The list, which is attached, will inform SCDHEC about facilities that SRS plans to start construction or start up in the near future, especially those for which some activity will begin before approval of the tank farm waste water permit.

It is anticipated that on three of the projects, the start of construction or start up will occur before approval of a permit (initial operation of one project will be covered under an addendum to the DWPF Vitrification Facility permit). SRS believes that these activities can be conducted under RCRA interim status. In the meeting on June 1, 1990, Ms. Weatherup agreed that the start up of In-Tank Precipitation -- the one facility that was discussed -- could be conducted under interim status. However, she wanted a list of pertinent new facilities so that she could understand which ones SRS intends to start activity on before approval of the permit.

It is important that we obtain concurrence on this list from SCDHEC to avoid delay in these projects. Each of these projects is critical to the SRS program of removing old tanks from service.

If you have any questions, please call me at 7-8982

CC: R. G. Garvin, 703-H
S. S. Cathey, 703-H
P. H. Stevens, 703-H
G. H. Street, 703-H
P. D. d'Entremont, 703-H
K. S. Weirzbicki, 703-H
T. H. Killian, 703-H
K. Z. Wolf, 704-S
WMT File, 703-H
File Code: WM-175.15

SRS HLRW TANK FARM NEW FACILITIES STATUS

INTRODUCTION

SRS is in the process of applying for a wastewater permit from SCDHEC for the High Level Radioactive Waste (HLRW) Tank Farms. The following discussion outlines the status of new facilities that SRS plans to start construction or start up in the near future.

DISCUSSION

The F and H Area High Level Radioactive Waste (HLRW) Tank Farms have been operated subject to RCRA interim status regulations since they were included in the SRS RCRA part A permit application June 30, 1987. As a result of the FFA negotiations, SRS is required to submit a waste water permit application for the tank farms instead of a RCRA Part B application.

During the transition, Waste Management (WM) will continue to operate the tank farms under RCRA interim status until an approved wastewater permit is received from SCDHEC. At that time the tank farms will be removed from the SRS part A permit application.

Maintenance, waste removal, and sludge processing activities on the tank farms will continue as scheduled. Some maintenance activities include replacement of pumps, piping, and miscellaneous equipment. Some waste removal activities include placement of slurry pumps, addition of utility piping, and construction of slurry pump supports. Sludge processing includes batch mixing, washing, and aluminum dissolution of HLRW sludge. None of these activities will change processing of the tank farm wastes or add new chemicals to the tank farm.

SRS identified four new facilities that are affected by the transition to wastewater: the New Waste Transfer Facility (HDB-8), In-Tank Precipitation (ITP), Replacement High-Level Waste Evaporator (RHLWE), and H-S Inter-Area Transfer Line (IAL). Each of these facilities will be either constructed or under construction by the time the permit is received. Table 1 details the status of each new facility. None of these projects introduces any new chemicals into the tank farm. WM will continue with construction and start up of these facilities as planned under RCRA interim status until an approved wastewater permit is received. Subsequent projects would require separate permit modifications. Such projects include the Hazardous Low Level Waste Processing Tanks (HLLWPT), which is also included on Table 1.

HDB-8 is a waste transfer facility that will connect various parts of the tank farm with the H-S IAL and H-F IAL. HDB-8 consists of a diversion box, four pump pits, and associated transfer lines and equipment. No processing will occur at HDB-8. HDB-8 is similar to other existing diversion boxes, pump pits, and transfer equipment.

ITP will process tank farm "salt solution" wastes by chemically precipitating and/or adsorbing radioactive salts, specifically cesium-137, strontium-90 and all isotopes of plutonium. The resulting precipitated solution is filtered to remove the precipitate from the remaining salt solution. The decontaminated salt solution is passed through a stripper column to remove organics prior to being transferred to Tank 50 (SCDHEC Industrial Wastewater Permit #14520). The precipitate will be transferred to the DWPF Vitrification Facility for incorporation into borosilicate glass when the facility becomes operational. The ITP process has been successfully run as a full scale demonstration in the tank farm in 1983. Of the six tanks associated with the project, four of them already contain radioactive waste.

The RHLWE will replace an existing evaporator and increase the processing capacity for evaporation. The RHLWE consists of an entirely new evaporator facility with an improved evaporator pot, condenser, overheads tanks, and all associated transfer piping and equipment.

The H-S IAL connects the H-Area HLRW Tank Farm to the S-Area DWPF Vitrification Facility. The H-S IAL consists of four 3" stainless steel transfer lines, a Low Point Pump Pit, and an Auxiliary Pump Pit.

The HLLWPT consists of two 750,000 gal tanks and associated process equipment to process the majority of the lower level wastes in the tank farms. These tanks will allow SRS to take the Type IV tanks out of service.

Table 1
New Facilities Status Summary

Project	Complete	Operational Status	Permitting Status
HDB-8	98%	Cold Chemical runs begin 7/90 Operation begins 12/91	Included in RCRA Part A permit. Will be included with the tank farm's wastewater permit application. Operation will begin prior to permit approval.
ITP	98%	Cold Chemical runs begin 9/90 Operation begins 1st quarter 91	Included in RCRA Part A permit. Will be included with the tank farm's wastewater permit application. Operation will begin prior to wastewater permit approval.
RHLWE	0%	Construction begins 1st quarter 91 Operation begins 1994	RCRA Part A permit modification will be filed in the near future. Will be included with the tank farm's wastewater permit application. Operation will not begin prior to approved wastewater permit is received.
H-S IAL	98%	Cold Chemical runs begin 1st quarter 91 Operation begins 9/92	Included in RCRA Part A permit. Will be included with the tank farm's wastewater permit application. Included in DWPF cold runs addendum and will not start operation until addendum is approved. Normal operation will start after waste water permit approval.
HLLWPT	0%	Construction begins 3/92	Construction will not begin before wastewater permit approval. A separate permit modification will be submitted.

OPS-WMT-
KEY WORDS
Waste Management
Permitting

DRAFT

JVO
MH

4 April 1990

TO: DOE

FROM: WSRC

For your edification
WDD

F and H Area Tank Farm Wastewater Permit Application Plan (U)

Ref: H. W. Truesdale, SCDHEC, to S. R Wright, DOE/SRS, June 30, 1989

As a result of negotiations among SCDHEC, EPA, and DOE; SCDHEC instructed SRS to submit a wastewater permit application for the high-level waste tank farms (reference 1). The tank farms have been operated under RCRA interim status since they were included in the SRS RCRA part A permit application June 30, 1987.

Waste Management was preparing a RCRA part B permit application at the time the letter was received from SCDHEC, and was planning to start up several new facilities in the near future under RCRA interim status. However, during the transition the requirements for currently planned new facilities and partially constructed facilities are unpredictable. SCDHEC has broad authority to determine when and which facilities will be permitted as a wastewater facility, but has given us no direction yet. SCDHEC can request that a wastewater permit be obtained before start-up of any new facility and SRS would likely accommodate this request. Such a situation could seriously delay construction and start-up of new facilities on the tank farm while WM prepares a permit application and SCDHEC approves it.

This memorandum outlines a plan for permitting and start-up of these facilities during the transition from RCRA to wastewater status. Your prompt attention to this matter would be appreciated to avoid delaying the construction and start-up schedules for the facilities identified below.

During the transition, WM will continue to operate the tank farms under RCRA interim status until an approved wastewater permit is received from SCDHEC. At that time the tank farms will be removed from the SRS part A permit application. During the transition period, new tank farm facilities not yet operating but under construction at the time of submission of the as-built application will be included in the application.

WM identified four new facilities that are affected by the transition to wastewater: the New Waste Transfer Facility (HDB-8), In-Tank Precipitation (ITP), Replacement High-Level Waste Evaporator (RHLWE), and H - S Inter-Area Transfer Line. Each of these facilities will be either constructed or under construction by the time the permit application is submitted (see figure 1). WM will continue with construction and start up of these facilities as planned under RCRA interim status until an approved wastewater permit is received. Subsequent projects would require separate permit modifications.

Tank 30 Gravity Drain Line (GDL) project will not be constructed but will go through design completion. The Tank 30 GDL will be constructed should the H Area CTS loop line feeding tank 30 become unusable.

WM has contracted with C. T. Main to prepare the as-built permit application for the tank farms, using the draft RCRA permit application as a source of information. Completion of the application is expected by July 1990 and submitted to SCDHEC by October 1990. The planned schedule is as follows:

1 January 90	First draft completed for WM and EPS review
19 February 90	First draft comment due
16 April 90	Second draft completed for WM and EPS review
14 May 90	Second draft comments due
18 June 90	Third draft completed for DOE review
20 August 90	DOE comments due
1 October 90	Application submitted to SCDHEC

Please provide written concurrence at your earliest convenience.

OSR 3-4A-W [Rev1-89]

WESTINGHOUSE SAVANNAH RIVER COMPANY

INTER-OFFICE MEMORANDUM

April 26, 1990

To: W. D. Dunaway, 703-A (3 copies)
R. W. Wilson, 703-H
H. H. Rowland, 703-F
L. C. Thomas, 703-F
N. R. Davis, 241-120H
G. E. Baynham, 241-28H
B. E. Long, 260-4H
T. H. Killian, 703-H
W. B. Van Pelt,
T. P. Gaughan, 241-120H
M. A. Ceravolo, 242-24H
G. H. Street, 703-H
M. J. Mahoney, 703-H
S. Crook, 703-H

Are there others? Why limit scope?

From: G. T. Wright, 703-H, 78726

SECOND DRAFT OF TANK FARM WASTEWATER PERMIT APPLICATION

Attached is the second draft (revision C) of the F and H Area Tank Farms Industrial Wastewater Permit Application and a listing of [redacted] As noted before, this permit could have a significant impact on tank farm operations so make sure it gets a good review. Please review the sections that pertain to your area of responsibility or appoint a delegate to review it for you. Return comments to J. A. Pike (703-H, 78982) by May 14, 1990. A timely review of the permit application is needed to keep C. T. Main on schedule.

Your review of the permit is needed to ensure that the application is accurate but still has sufficient flexibility to allow minor changes in operation. Certain sections of the application make commitments to SCDHEC and demand careful attention to detail. Section 1.5, "Normal Operations", Section 1.6, "Permit Modifications", and Section 7, "Specifications", detail the operating commitments. The list of Design and Operating Details which SRS will Commit to the SCDHEC details other commitments scattered throughout the rest of the document. If significant problems are discovered we need to know now so they can be incorporated into the application.

Thank you for you help.

DESIGN AND OPERATING DETAILS WHICH SRS WILL COMMIT TO THE SCDHEC IN THE F/H-AREA TANK FARM INDUSTRIAL WASTEWATER PERMIT

SECTION	SPECIFICATION	VALUE	MAX/MIN/AV	REFERENCE
1.1	Evaporator overheads including RBOF/RRF waste.	27,000,000 gal/year	max	J. A. Pike 4/3/90 OPS-WMT-900300
1.1	Decontaminated Salt Solution	13,000,000 gal/year	max	J. A. Pike 4/6/90 OPS-WMT-900321
1.1	Washed Precipitate Slurry	800,000 gal/year	max	J. A. Pike 4/6/90 OPS-WMT-900321
1.1	Washed Sludge Slurry	500,000	max	J. A. Pike 4/3/90 OPS-WMT-900300
1.1	Construction Replacement Evaporator	Middle of 1991		R. G. Garvin 11/2/89
1.1	Start-up Replacement Evaporator	1993		OPS-WMT-890179
4.2.1	High Heat Waste Decay Heat	5-16 Btu/ hour-gal	av	SAR
4.2.1	High Heat Waste Aging	2-6 years 12 years	av max	Letter to L. C. Goidell from J.E. Hoisington 7/11/88
4.2.2	Low Heat Waste Decay Heat	0.2-0.8 Btu/hour-gal	av	SAR
4.3.1	Mercury Recovery From Evaporation	15 gallons	max	Comments on Draft B
4.3.2	Freeboard Volume in Waste Concentrate Receipt Tanks	300,000 gals.	av	SRS meeting 2/8/90
4.4.1.2	Salt Cake Processing Number of Dissolution Steps	5 8	av max	SRS meeting 2/8/90

SECTION	SPECIFICATION	VALUE	MAX/MIN/AV	REFERENCE
4.4.1.2	Period to Empty a Full Salt Tank	4 months 32 months	min max	Letter to L.C. Goidell from J.E. Hoisington 7/11/88
4.4.1.2	Salt Solution Batch Size for Processing at ITP	600,000 gallons	av	SAR, SRS meeting 2/8/90
4.4.1.4	ITP Filtration Pump Rate into Filters	500 gpm	max	SAR, SRS meeting 2/8/90
4.4.1.4	Post Filtration Filtrate Flow Rate	115 gpm	max	SAR, SRS meeting 2/8/90
4.4.1.4	Continuous Flow Rate Across the Filters by Reacted Salt Solution	100 gpm	min	SAR, Correspondence 3/23/90
4.4.1.4	Transfer Rate of Filtrate to Tank 50	200 gpm	av	SAR, SRS meeting 2/8/90
4.4.1.5	Filtrate Flow Rate During ITP Washing Step	33 gpm	max	SAR, SRS meeting 2/8/90
4.4.1.5	Washed Decontaminated Filtrate Flow Rate to Tank 22	200 gpm	av	SAR, SRS meeting 2/8/90
4.4.1.6	Precipitate Slurry Flowrate to DWPF Vitrification from Tank 49	100 gpm	av	SAR, SRS meeting 2/8/90
4.4.1.6	Precipitate Slurry will be Transferred to DWPF Vitrification in Sub Batches	3000 gal	av	SAR, SRS meeting 2/8/90
4.5.1	A Single Batch of Sludge for Processing in the Extended Sludge Processing Facility (Macro Batch)	1,000,000	max	SAR, S-2081 Basic Data

SECTION	SPECIFICATION	VALUE	MAX/MIN/AV	REFERENCE
4.5.1	Required period to Process Sludge	2 years	av	SAR, S-2081 Basic Data
4.5.1.3	Mixing Rate During Sludge Washing	2000 gpm	max	SAR, S-2081 Basic Data
4.5.1.3	Number of Washing/ Co-washing Cycles Required to Complete One Batch of Sludge	17	av	SAR, S-2081 Basic Data
4.5.1.4	Tank 42 Transfer to Tanks 40 or 51	100 gpm	max	SAR, S-2081 Basic Data
4.5.1.4	Volume of Washed Sludge Slurry Processed During Each Extended Sludge Processing Cycle	1,000,000 gallons	max	SAR, S-2081 Basic Data
4.5.1.4	Period Required to Complete One ESP Cycle	22 months	av	SAR, S-2081 Basic Data
4.5.1.4	Transfer Rate of Processed Sludge to the DWPF Vitrification Facility	100 gpm	av	SAR, S-2081 Basic Data
4.6.2	Decay Heat for a HHW Tank	3,000,000 Btu/hr	max	?
4.6.2	Cooling Capacity of Tanks	6,000,000 Btu/hr	max	SAR
4.7	Tank Farm Waste Transfer Rates Cause a 2.5 inch/hour Change in a Tank Liquid Level	30-100 gpm	range	SAR
4.7.4	Steam-jet eductor capacity	75 gpm	min	Technical standards DPSTS-241

SECTION	SPECIFICATION	VALUE	MAX/MIN/AV	REFERENCE
5.1.3	RBOF/RRF Waste is Transferred to ETF if radioactively contaminated	if <3000 d/m/ml	--	DPSOL 241-H-601
5.1.3	RBOF/RRF Waste is Transferred to 242-CRC	if 100,000 > x > 3000 d/m/ml	--	DPSOL 241-H-601
5.1.3	RBOF/RRF Waste is Sent to LHW Tank	if 100,000,000 > x > 100,000 d/m/ml	--	DPSOL 241-H-601
5.1.8	Contaminated Storm Water May be Sent to the Tank Farm. ETF is also a Potential Treatment Facility	if x > 10 d/m/ml	--	SAR

Notes:

SAR refers to the "Safety Analysis - 200 Area SRP Tank Farms" DPSTSA-200-10 Sup-18. August 1988.

OSR 3-4A-W (Rev1-89)

WESTINGHOUSE SAVANNAH RIVER COMPANY

INTER-OFFICE MEMORANDUM

April 26, 1990

To: W. D. Dunaway, 703-A (3 copies)
R. W. Wilson, 703-H
H. H. Rowland, 703-F
L. C. Thomas, 703-F
N. R. Davis, 241-120H
G. E. Baynham, 241-28H
B. E. Long, 260-4H
T. H. Killian, 703-H
W. B. Van Pelt,
T. P. Gaughan, 241-120H
M. A. Ceravolo, 242-24H
G. H. Street, 703-H
M. J. Mahoney, 703-H
S. Crook, 703-H

From: G. T. Wright, 703-H, 78726 GTW

SECOND DRAFT OF TANK FARM WASTEWATER PERMIT APPLICATION

Attached is the second draft (revision C) of the F and H Area Tank Farms Industrial Wastewater Permit Application and a listing of Design and Operating Details which SRS will Commit to the SCDHEC. As noted before, this permit could have a significant impact on tank farm operations so make sure it gets a good review. Please review the sections that pertain to your area of responsibility or appoint a delegate to review it for you. Return comments to J. A. Pike (703-H, 78982) by May 14, 1990. A timely review of the permit application is needed to keep C. T. Main on schedule.

Your review of the permit is needed to ensure that the application is accurate but still has sufficient flexibility to allow minor changes in operation. Certain sections of the application make commitments to SCDHEC and demand careful attention to detail. Section 1.5, "Normal Operations", Section 1.6, "Permit Modifications", and Section 7, "Specifications", detail the operating commitments. The list of Design and Operating Details which SRS will Commit to the SCDHEC details other commitments scattered throughout the rest of the document. If significant problems are discovered we need to know now so they can be incorporated into the application.

Thank you for you help.

DESIGN AND OPERATING DETAILS WHICH SRS WILL COMMIT TO THE SCDHEC IN THE F/H-AREA TANK FARM INDUSTRIAL WASTEWATER PERMIT

SECTION	SPECIFICATION	VALUE	MAX/MIN/AV	REFERENCE
1.1	Evaporator overheads including RBOF/RRF waste.	27,000,000 gal/year	max	J. A. Pike 4/3/90 OPS-WMT-900300
1.1	Decontaminated Salt Solution	13,000,000 gal/year	max	J. A. Pike 4/6/90 OPS-WMT-900321
1.1	Washed Precipitate Slurry	800,000 gal/year	max	J. A. Pike 4/6/90 OPS-WMT-900321
1.1	Washed Sludge Slurry	500,000	max	J. A. Pike 4/3/90 OPS-WMT-900300
1.1	Construction Replacement Evaporator	Middle of 1991		R. G. Garvin 11/2/89
1.1	Start-up Replacement Evaporator	1993		OPS-WMT-890179
4.2.1	High Heat Waste Decay Heat	5-16 Btu/ hour-gal	av	SAR
4.2.1	High Heat Waste Aging	2-6 years 12 years	av max	Letter to L. C. Goidell from J.E. Hoisington 7/11/88
4.2.2	Low Heat Waste Decay Heat	0.2-0.8 Btu/hour-gal	av	SAR
4.3.1	Mercury Recovery From Evaporation	15 gallons	max	Comments on Draft B
4.3.2	Freeboard Volume in Waste Concentrate Receipt Tanks	300,000 gals.	av	SRS meeting 2/8/90
4.4.1.2	Salt Cake Processing Number of Dissolution Steps	5 8	av max	SRS meeting 2/8/90

SECTION	SPECIFICATION	VALUE	MAX/MIN/AV	REFERENCE
4.4.1.2	Period to Empty a Full Salt Tank	4 months 32 months	min max	Letter to L.C. Goidell from J.E. Hoisington 7/11/88
4.4.1.2	Salt Solution Batch Size for Processing at ITP	600,000 gallons	av	SAR, SRS meeting 2/8/90
4.4.1.4	ITP Filtration Pump Rate into Filters	500 gpm	max	SAR, SRS meeting 2/8/90
4.4.1.4	Post Filtration Filtrate Flow Rate	115 gpm	max	SAR, SRS meeting 2/8/90
4.4.1.4	Continuous Flow Rate Across the Filters by Reacted Salt Solution	100 gpm	min	SAR, Correspondence 3/23/90
4.4.1.4	Transfer Rate of Filtrate to Tank 50	200 gpm	av	SAR, SRS meeting 2/8/90
4.4.1.5	Filtrate Flow Rate During ITP Washing Step	33 gpm	max	SAR, SRS meeting 2/8/90
4.4.1.5	Washed Decontaminated Filtrate Flow Rate to Tank 22	200 gpm	av	SAR, SRS meeting 2/8/90
4.4.1.6	Precipitate Slurry Flowrate to DWPF Vitrification from Tank 49	100 gpm	av	SAR, SRS meeting 2/8/90
4.4.1.6	Precipitate Slurry will be Transferred to DWPF Vitrification in Sub Batches	3000 gal	av	SAR, SRS meeting 2/8/90
4.5.1	A Single Batch of Sludge for Processing in the Extended Sludge Processing Facility (Macro Batch)	1,000,000	max	SAR, S-2081 Basic Data

SECTION	SPECIFICATION	VALUE	MAX/MIN/AV	REFERENCE
4.5.1	Required period to Process Sludge	2 years	av	SAR, S-2081 Basic Data
4.5.1.3	Mixing Rate During Sludge Washing	2000 gpm	max	SAR, S-2081 Basic Data
4.5.1.3	Number of Washing/ Co-washing Cycles Required to Complete One Batch of Sludge	17	av	SAR, S-2081 Basic Data
4.5.1.4	Tank 42 Transfer to Tanks 40 or 51	100 gpm	max	SAR, S-2081 Basic Data
4.5.1.4	Volume of Washed Sludge Slurry Processed During Each Extended Sludge Processing Cycle	1,000,000 gallons	max	SAR, S-2081 Basic Data
4.5.1.4	Period Required to Complete One ESP Cycle	22 months	av	SAR, S-2081 Basic Data
4.5.1.4	Transfer Rate of Processed Sludge to the DWPF Vitrification Facility	100 gpm	av	SAR, S-2081 Basic Data
4.6.2	Decay Heat for a HHW Tank	3,000,000 Btu/hr	max	?
4.6.2	Cooling Capacity of Tanks	6,000,000 Btu/hr	max	SAR
4.7	Tank Farm Waste Transfer Rates Cause a 2.5 inch/hour Change in a Tank Liquid Level	30-100 gpm	range	SAR
4.7.4	Steam-jet eductor capacity	75 gpm	min	Technical standards DPSTS-241

SECTION	SPECIFICATION	VALUE	MAX/MIN/AV	REFERENCE
5.1.3	RBOF/RRF Waste is Transferred to ETF if radioactively contaminated	if <3000 d/m/ml	--	DPSOL 241-H-601
5.1.3	RBOF/RRF Waste is Transferred to 242-CRC	if 100,000 > x > 3000 d/m/ml	--	DPSOL 241-H-601
5.1.3	RBOF/RRF Waste is Sent to LHW Tank	if 100,000,000 > x > 100,000 d/m/ml	--	DPSOL 241-H-601
5.1.8	Contaminated Storm Water May be Sent to the Tank Farm. ETF is also a Potential Treatment Facility	if x > 10 d/m/ml	--	SAR

Notes:

SAR refers to the "Safety Analysis - 200 Area SRP Tank Farms" DPSTSA-200-10 Sup-18. August 1988.

AC 116576
24

MEMORANDUM OF AGREEMENT

This Memorandum of Agreement (hereinafter "MOA") is between the Manager, Savannah River Operations Office of the Department of Energy (hereinafter "SR") and the Commissioner, South Carolina Department of Health and Environmental Control (hereinafter "SCDHEC"). The purpose of the MOA is to set forth the relationship between SR and SCDHEC regarding activities at the Savannah River Plant (hereinafter "SRP"). This MOA recognizes the SCDHEC delegated authority under the Clean Water Act (33 USC § 1251 et seq.), the Clean Air Act (42 USC § 7401 et seq.), the Safe Drinking Water Act (42 USC § 300(f) et seq.) and the Resource Conservation and Recovery Act (42 USC § 6901 et seq.). This agreement does not effect any previous agreements between SR and the Bureau of Radiological Health of SCDHEC.

NOW THEREFORE, in the spirit of a mutual cooperative desire by SR and SCDHEC to consider the following voluntary agreement to meet both parties' interests in ensuring the environmental quality on the SRP:

1. SR shall comply, as a matter of law and, to the extent not otherwise required by law, as a matter of cooperation, with the following South Carolina Acts and SCDHEC regulations and subsequent amendments unless such acts or regulations are found inapplicable by a court, or by the SCDHEC Board, or unless exempted by an Act of Congress enacted subsequent to the effective date of this MOA:

Pollution Control Act, SC Code as amended § 48-1-10 through 48-1-350

Safe Drinking Water Act, SC Code as amended § 44-55-10 through 44-55-100

Hazardous Waste Management Act, SC Code as amended § 44-56-10 through 44-56-210

Oil and Gas Exploration, Drilling, Transportation and Production Act, SC Code as amended § 48-43-10 through 48-43-850

R. 61-5
R. 61-9
R. 61-56
R. 61-58 through R. 61-58.8
R. 61-59
R. 61-60
R. 61-61
R. 61-62 through R. 61-62.6
R. 61-66
R. 61-67
R. 61-68
R. 61-69
R. 61-70
R. 61-71
R. 61-72
R. 61-73
R. 61-74
R. 61-76
R. 61-79 through R. 61-79.11
R. 61-79.124 - 61-79.270
R. 61-81
R. 61-82
R. 61-87

2. In implementing the South Carolina Acts and SCDHEC Regulations listed in section 1, SR and SCDHEC shall interrelate in the same manner as any other industry in South Carolina.

3. a. During any environmental emergency or during any SCDHEC follow-up inspection an SR representative will be onsite to respond to SCDHEC questions or guidance. Spills at SR will continue to be handled in accordance with the June 14, 1984, letter from M.J. Sires to Lewis Shaw.

b. The Director, Environmental Division, SR, shall be available to any employee of SCDHEC to ensure full cooperation with SCDHEC by all persons on SRP.

c. The Assistant Manager for Health, Safety and Environment, SR, shall meet periodically with the Deputy Commissioner for Environmental Quality Control, as mutually agreed, to review the relationship between the parties.

4. If SR, for any reason, does not comply with any requirement under the acts and regulations in section 1, then after written notice from SCDHEC of such non-compliance, SR shall provide in writing to the appropriate SCDHEC office the

reasons for not following that requirement, within ten (10) working days. SCDHEC may accept SR's reasons, continue discussions to reach a mutually satisfactory agreement, issue an order directing compliance, including sanctions if appropriate, or seek enforcement in court. SR may comply with such order, or contest such order in an appropriate forum.

5. a. SCDHEC recognizes that classified information, and certain other sensitive information as defined in 10 C.F.R. Part 1017 and Department of Energy Order 5630.8, the dissemination of which is controlled by the Department of Energy, cannot be provided to SCDHEC.

b. Within the bounds of classification, SR will explain the reasons for and the authorities requiring, nondisclosure of any information because of its classified or sensitive nature on a case-by-case basis as the need arises. This explanation will be provided verbally as soon as possible and in writing within ten (10) working days or as mutually agreed upon between SR and SCDHEC.

6. a. SCDHEC recognizes that SR has obligations under the Federal budget process and the National Environmental Policy Act.

b. SR recognizes that SCDHEC has an obligation to enforce State environmental laws and delegated Federal environmental laws.

7. Nothing in this MOA shall prevent SCDHEC from seeking enforcement, or SR from challenging enforcement, of any Federal or State law before a court of competent jurisdiction after completion of the process described in sections 2 through 5 above.

8. Nothing in this MOA shall be deemed an admission of jurisdiction or a waiver of jurisdiction by either party.

9. a. This MOA shall be effective on the date the last signature is affixed hereto.

b. This MOA may be terminated by either party after thirty (30) days notice in writing to the other party.

R C Morgan
Manager, SR

4/8/85
Date

Roberts Jackson MD
Commissioner, SCDHEC

4/8/85
Date

①

First

WASTE WATER PERMIT APPLICATION FOR F AND H-AREA TANK FARMS

by

J. A. PIKE, WMT

DOE determined:

radioactive components of wastes are regulated by DOE
chemically hazardous components are regulated by environmental regulators.

Following EPA recommendation SRS files for RCRA part A interim status.

Lacking any other direction WM began preparation of part B application because of 40 CFR 270.73, Termination of Interim Status states:

> "Interim status terminates...for owners or operators of any facility...on November 8, 1992, unless the owner or operator of the facility submits a Part B application for a RCRA permit for the facility by November 8, 1988."

During next two years:

DOE, EPA, SCDHEC discussed how to permit tank farms.

They are developing a Federal Facilities Agreement (FFA).

EPA ruled November 8, 1988, RCRA deadline does not apply. * mixed waste

SCDHEC requested DOE to file wastewater permit application and withdraw its interim RCRA part A permit.

PROBLEMS

Changing to wastewater regulation requires period of time for adjustment of programs and operations.

Requirements during transition undefined.

SCDHEC can request wastewater permit be obtained before construction and start-up of any new facilities.

QUESTION

How should WM proceed without delaying construction and start-up?

POSSIBILITIES

- Continue construction and start-up of facilities as planned.
  - No construction or start-up delays.
- Continue construction to completion and wait for approved wastewater permit.
  - No construction delays but delayed start-up.
- Stop construction.
  - Long construction and start-up delays.

PROPOSAL

- WM continue to operate under RCRA part A interim status until Wastewater permit is issued.
- Include in permit application new tank farm facilities under construction but not yet operating at time of submission of the application.
- Continue cold runs and start-up as planned.

NOW IN 2nd DRAFT

RICH STEGAN
PHIL MIXON

CTM

New Facility Schedules vs. Waste Water Permit Schedule

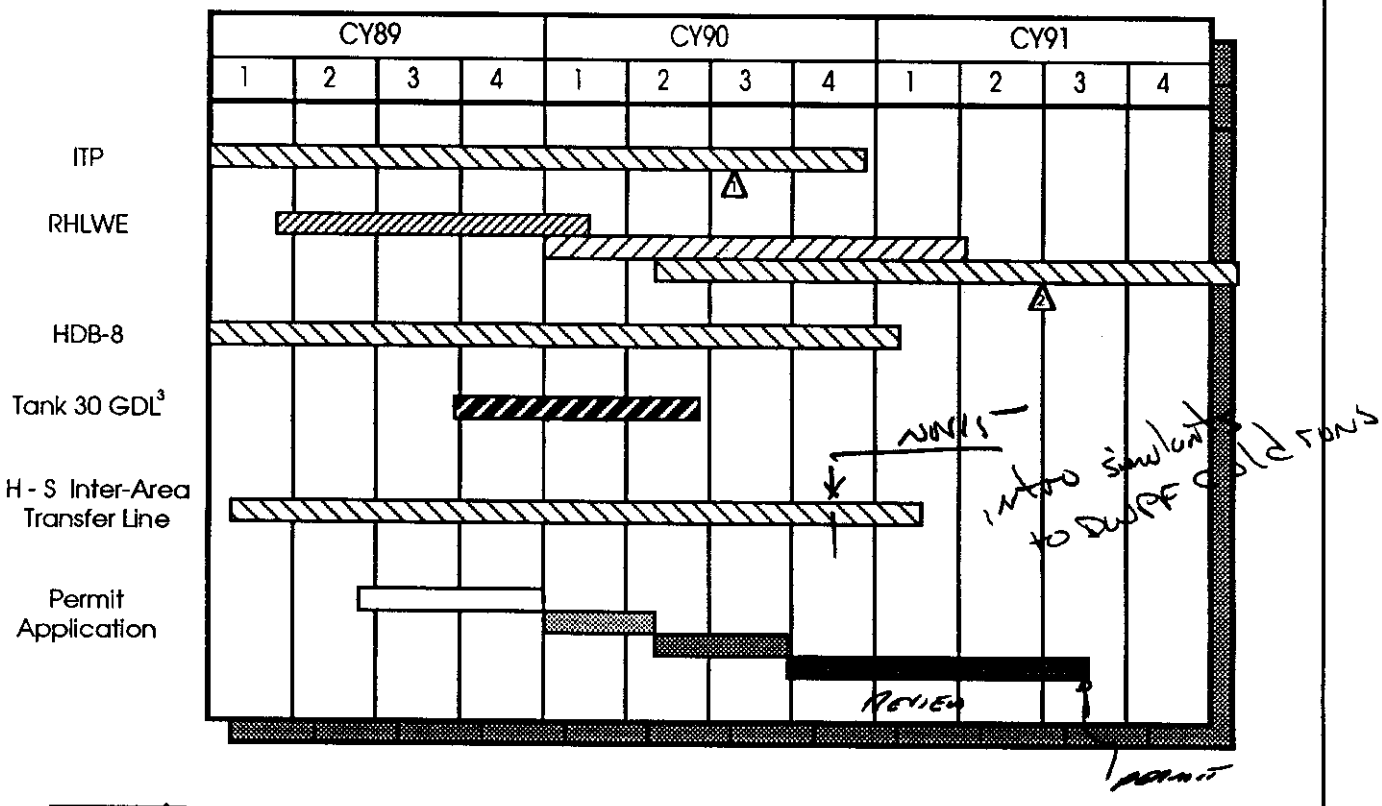

Title 1 Design	First Draft Application
Title 2 Design	Second Draft Application
Construction and Testing	Final Draft Application for DOE Review
	Application to SCDHEC for Final Appoval

△1 Cold Runs Begin

△2 First Concrete Poured

3 GDL will be Constructed only if Needed

Last

POSITION

TODAY

- Agreement among WSRC parties on proposal to DOE.

NEXT

- DOE concurrence.

POTENTIALLY

- SCDHEC concurrence.

Department of Energy
Savannah River Operations Office
P.O. Box A
Aiken, South Carolina 29802

MAY 0 8 1986

J. R. Barker, Director of Environmental
Audit and Compliance (EH-24), HQ

REVISED PRELIMINARY ENGINEERING REPORT FOR F- AND H-AREAS EFFLUENT TREATMENT FACILITY, SAVANNAH RIVER PLANT (MEMO, SALGADO TO SECRETARIAL OFFICERS AND HEADS OF FIELD ORGANIZATIONS, 1/8/86)

In keeping with the referenced memorandum, SR is attaching a draft transmittal letter and a revised preliminary engineering report (PER) prior to submittal to the South Carolina Department of Health and Environmental Control (SCDHEC). PER approval is the first step in the SCDHEC process for approving wastewater treatment facilities and discharge permits. SR would like to submit the revision to SCDHEC on May 16, 1986. Due to construction lead times, delay of the submittal of this application would risk statutory violations and/or materials production impacts. Your concurrence with the proposed action would be appreciated.

The Savannah River Plant (SRP) chemical separations areas discharge wastewaters to seepage basins. These wastewaters have hazardous and low level radioactive components. Because of the hazardous components, SR has Resource Conservation and Recovery Act interim status for the seepage basins that receive these wastes.

The Hazardous and Solid Waste Amendments of 1984 (HSWA) requires facilities to stop disposing of hazardous wastes in seepage basins by November 8, 1988. To meet this requirement, SR proposes to construct an effluent treatment facility (ETF). The ETF processes would remove contaminants, sludge would be stored while disposal options are evaluated, and effluent would be discharged to an onsite stream through a permitted outfall. ETF operation will enable SRP to continue chemical separations facility production after the HSWA statutory deadline.

Federal and State regulations would require a discharge permit for the ETF effluent ("NPDES" permit) and a wastewater treatment facility permit for the ETF construction. In compliance with these regulations, SR submitted a PER to SCDHEC on November 1, 1985. SCDHEC has commented on the PER and SR has revised the PER accordingly. Once the PER is approved, SR must submit a discharge permit ("NPDES") application for approval, and concurrently, a wastewater treatment facility construction permit application, including a final engineering report, for approval. Construction can begin only after all approvals are received.

MAY 0 8 1986

Attachment I is the draft transmittal letter for submitting the revised PER to the State. Attachment II summarizes the PER background, the associated production impacts, options, and recommendations. Attachment III is the revised PER.

Questions from your staff may be directed to L. C. Goidell (FTS 239-3966).

Original Signed By

S. R. Wright, Acting Director
Environmental Division

EEC:LCG:mj

3 Attachments

cc w/o atts:
J. E. Lytle (DP-12), HQ
J. L. Meinhardt (DP-10), HQ
J. A. Ford (DP-13), HQ
H. Garson (GC-11), HQ

bcc w/atts I and II:
~~J. A. Porter, Du Pont, SRP~~
J. S. Roberts, Du Pont, SRP

Mr. James A. Joy, III, Director
Industrial and Agricultural
Wastewater Division
South Carolina Department of Health
and Environmental Control
2600 Bull Street
Columbia, SC 29201

Dear Mr. Joy:

REVISED PRELIMINARY ENGINEERING REPORT (PER) FOR THE F- AND H-AREA EFFLUENT TREATMENT FACILITY (ETF)

Enclosed are three copies of the subject PER for your review and approval. The PER has been revised to incorporate most of your staff's review comments. However, five review comments are addressed as follows:

1. Tritium Levels in the F&H ETF Effluent--As mentioned in our meeting on November 22, 1985, the ETF effluent will contain levels of tritium greater than background. However, the level of tritium will be at a level low enough such that the South Carolina Department of Health and Environmental Control will be able to carry its samples offsite for analysis.

2. High Level Radioactive Waste Tank Farm--As described in the Final Environmental Impact Statements on Waste Management Operations (September 1977) and on the Defense Waste Processing Facility (February 1982), the high level radioactive waste tanks receive liquid radioactive waste produced at the Savannah River Plant primarily associated with the production of nuclear defense material. Presently it is not anticipated that more high level tanks will be constructed.

   The contents of the high level tanks are classified as "Byproduct Material" as defined by the Atomic Energy Act (AEA) and the U.S. Department of Energy proposed Byproduct Material rule- making (50 Federal Register 45736, November 1, 1985) and are regulated under the AEA and are exempt from Resource Conservation and Recovery Act (RCRA) requirements. Tank farm waste will be processed and separated into high-level radioactive components and low-level radioactive components. The high-level components will be further processed by the Defense Waste Processing Facility for future disposal in a Federal repository, and the low-level component will be further processed in Z-Area for onsite disposal.

3. F- And H-Area Wastewater Discharges Other than the ETF--As currently planned, the ETF will be the only treatment plant in the F- and H-Areas processing radioactively contaminated wastewater and discharging treated effluent. Discharges from support facilities such as the powerhouse, sewage treatment plant, noncontact cooling water, and stormwater runoff will continue as currently permitted under NPDES.

4. F- And H-Area Solid Waste and Sludge Handling--The ETF will receive radioactively contaminated wastewater and will not be used to treat process sludge. Waste concentrate from the ETF will be sent to the high level radioactive waste tank farm for storage while disposal options are evaluated. Spent equipment (i.e., reverse osmosis membranes and ion exchange resins) will be packaged for disposal in the Low Level Radioactive Waste Burial Ground. Any spent equipment determined to be hazardous waste will be stored pending completion of a mixed waste disposal facility.

5. Proposed Overflow Lines From the Lift Stations to the Stormwater Retention Basins--The process lift stations overflow lines have been eliminated from the design.

SRP requests that this PER be given priority over other SRP permit packages undergoing your review. The ETF is exempt from RCRA permitting requirements because it is a wastewater treatment unit.

Questions from your staff can be directed to G. S. Hoover (803/725-3968).

Sincerely,

S. R. Wright, Acting Director
Environmental Division

EEC:GSH:

Enclosure

cc w/encl:
F. K. Hill, SCDHEC-Aiken

bcc w/encl:
R. L. Frenck (DP-133), HQ
OCC (Concur)
P&W (Concur)
PED (Concur)
PROD

bcc w/o encl:
J. A. Porter, Du Pont, SRP
J. S. Roberts, Du Pont, SRP
J. Barker (EH-24), HQ
J. L.Meinhardt (DP-10), HQ
J. A. Ford (DP-133), HQ
J. E. Lytle (DP-10), HQ
G. S. Hoover, ED
SR Reading File

ATTACHMENT II
F- AND H-AREAS ETF ISSUES

Background

SR chemical separations processes in F-Area and H-Area (canyons) discharge a liquid waste effluent that contains hazardous low-level radioactive components. The SR position is that the potential hazards from the hazardous waste components outweigh potential hazards from radioactive waste components. Because of the hazardous components, in 1979, SR included this waste in its state Notification of Hazardous Waste Activity and its Part A Hazardous Waste Management Permit Application, with copies to the U.S. Environmental Protection Agency. SR has Resource Conservation and Recovery Act (RCRA) interim status for the seepage basins that currently receive these wastes

The Hazardous Solid Waste Act of 1984 (HSWA) requires facilities to stop disposing of hazardous wastes in seepage basins by November 8, 1988. To meet this requirement, SR proposes to construct an effluent treatment facility (ETF) for the separations processes wastewater. The ETF processess would remove contaminants, sludge would be stored while disposal options are evaluated, and effluent would be discharged to an onsite stream.

State regulations would require a discharge permit for the ETF effluent ("NPDES" permit) and a wastewater treatment facility construction permit for the ETF. In compliance with these regulations, SR submitted a preliminary engineering report (PER) to the South Carolina Department of Health and Environmental Control (SCDHEC) on November 1, 1985. SCDHEC has commented on the PER and SR has a revision ready for submittal. Once the PER is approved, SR must submit an NPDES application for approval, and concurrently a wastewater treatment facility construction permit including a final engineering report, application for approval. Construction can begin only after all approvals are obtained.

Wastewater treatment facilities that treat hazardous wastes may also be required to obtain a hazardous waste treatment permit. The facility is exempt from this requirement, however, if it meets the definition of a "totally enclosed treatment facility (TETF)" or a "wastewater treatment unit." SR believes that the ETF is exempt from the RCRA permitting requirement. Preliminary negotiations indicate that SCDHEC is willing to concur but wants the facility to be permitted as a wastewater treatment facility.

Production Impacts

The SRP chemical separations facilities in F- and H-Areas process irradiated materials for tritium and plutonium recovery and discharge wastewaters to seepage basins. The F- and H-Area ETF operation will enable SRP to continue chemical separations facility production after the HSWA statutory deadline for discontinuing seepage basin usage.

Options Evaluation

Option 1. Status quo; submit PER revision to State, recognize State jurisdiction except radioactivity

Advantages:
1. Consistent with SR actions since 1979
2. Permitted as wastewater treatment facility (pursuant to Clean Water Act, not inconsistent with DOE-HQ RCRA policy on mixed waste)
3. State-preferred option
4. Avoids giving another agency (EPA) a chance to deny RCRA permitting exemption
5. Consistent with other permitted SRP ETF's
6. Allows discontinuing seepage basin usage in conformance with HSWA
7. Allows continued canyons operations
8. Consistent with MOA

Disadvantages:
1. May require State concurrence with hazardous waste permit exemption
2. May be inconsistent with DOE position

Option 2. Withdraw PER from State and submit revision to EPA

Advantages:
1. May be consistent with DOE policy

Disadvantages:
1. Cannot obtain State NPDES permit without State wastewater treatment facility permit
2. Will delay permitting
3. Gives EPA another chance to deny TETF exemption
4. Will cause HSWA violation
5. Inconsistent with MOA

Option 3. Continue to work with State under MOA

Advantages: Same as leaving applications with State, Option 1.

Disadvantages:
1. Could raise questions of also needing EPA permit

Option 4. Letter to EPA-Region IV, copy to State, asking who has jurisdiction

Advantages:
1. Minimal disruption of current permitting activities
2. Response should identify whether EPA-Region IV and DOE agree

Disadvantages:
1. Response from EPA-Region IV not binding on other EPA regional offices; may lead to inconsistent approaches

<u>Recommendation</u>

Option 1. Status quo; submit PER revision to State, recognize State jurisdiction except radioactivity

OSR 3-4A-W (Rev1-89)

WESTINGHOUSE SAVANNAH RIVER COMPANY

INTER-OFFICE MEMORANDUM

OPS-WMT-890179
KEY WORDS
Waste Management
Permitting

R. G. Garvin 11/2/89
Authorized Derivative Classifier

November 2, 1989

TO: J. S. ROBERTS, 703-A

FROM: R. G. GARVIN, 703-H

F AND H AREA TANK FARM WASTEWATER PERMIT APPLICATION PLAN (U)

Ref: Letter, H. W. Truesdale, SCDHEC, to S. R. Wright, DOE-SR, June 30, 1989

As a result of recent negotiations between SCDHEC, EPA, and DOE; SCDHEC requested SRS to submit a South Carolina Pollution Control Act wastewater permit application for the high-level waste tank farms (reference 1). The tank farms have been operated under Resource Conservation and Recovery Act (RCRA) interim status since they were included in the SRS RCRA part A permit application June 30, 1987.

Waste Management (WM) was preparing a RCRA part B permit application at the time the letter was received from SCDHEC, and was planning to start up several new facilities in the near future under RCRA interim status. However, during the transition the requirements for currently planned new facilities and partially constructed facilities are unpredictable. SCDHEC has broad authority to determine when and which facilities will be permitted as a wastewater facility, but has given no direction yet. SCDHEC can request that a wastewater permit be obtained before start-up of any new facility and SRS would likely accommodate this request. Such a situation could seriously delay construction and start-up of new facilities on the tank farm while WM prepares a permit application and SCDHEC approves it.

2

This memorandum proposes a plan for permitting and start up of these facilities during the transition from RCRA to wastewater permit status. Your prompt attention to this matter would be appreciated since DOE and SCDHEC approvals are needed as soon as possible to avoid delaying the construction and start up schedules for the facilities identified below.

During the transition, we propose that WM continue to operate the tank farms under RCRA interim status until an approved wastewater treatment facility permit is received from SCDHEC. At that time the tank farms will be removed from the SRS part A permit application. During the transition period, new tank farm facilities not yet operating but under construction at the time of submission of the as-built wastewater facility application will be included in the wastewater application.

WM identified six new facilities that are affected by the transition to wastewater regulation: the New Waste Transfer Facility (HDB-8), In-Tank Precipitation (ITP), Replacement High-Level Waste Evaporator (RHLWE), Tank 30 Gravity Drain Line (GDL), H - S Inter-Area Transfer Line, and Waste Removal. Each of these facilities will be either constructed or under construction by the time the permit application is submitted (see figure 1). WM will continue with construction and start up as these facilities as planned under RCRA interim status until an approved wastewater permit is received. Subsequent projects would require separate permit modifications such as the Low Level Waste Processing Tanks.

WM has contracted with C. T. Main to prepare the as-built wastewater permit application for the tank farms, using the draft RCRA part B - permit application as a source of information. Completion of the application is expected by May 1990 and submitted to SCDHEC by August 1990. The planned schedule is as follows:

1 January 90	First draft wastewater permit completed for WM and EPS review
1 February 90	First draft comment due
1 March 90	Second draft completed for WM and EPS review
1 April 90	Second draft comments due
1 May 90	Third draft completed for DOE review
1 July 90	DOE comments due
1 August 90	Application submitted to SCDHEC

Would you please forward this plan to DOE for review and arrange a meeting with DOE Environmental to discuss it. After reaching agreement with DOE, the plan needs to be discussed with SCDHEC for their approval. As discussed with you previously, I feel it is imperative that WMT be included in these discussions with DOE and SCDHEC.

RGG:kwa

WWR

New Facility Schedules vs. Waste Water Permit Schedule

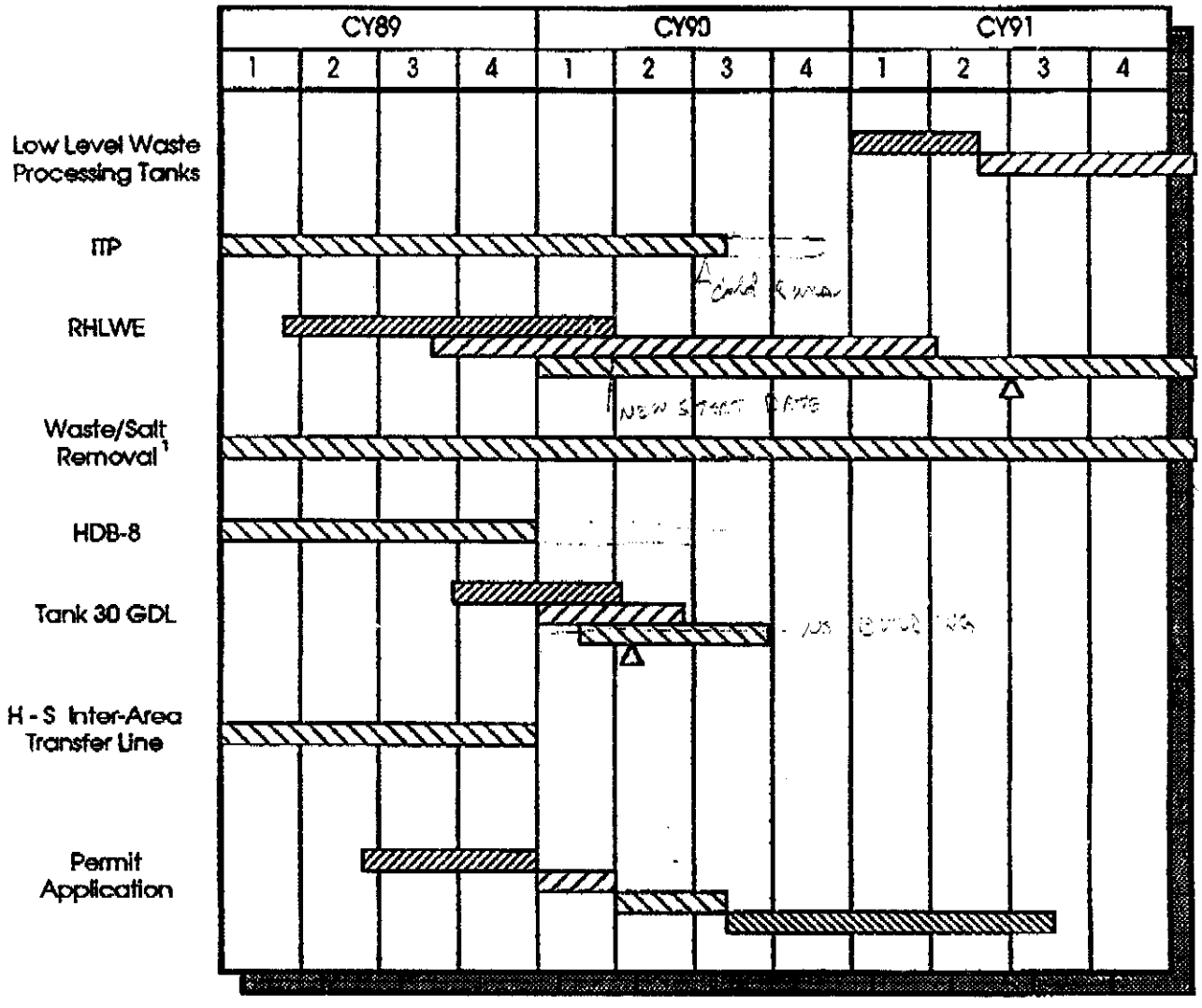

Title 1 Design/First Draft Application

Title 2 Design/Second Draft Application

Construction and Testing/Final Draft Application for DOE Review

Application to SCDHEC for Final Appoval

Δ First Concrete Poured

[1] Waste/Salt Removal is a continuing program.

Figure 1

UNCLASSIFIED
WESTINGHOUSE SAVANNAH RIVER COMPANY
WASTE MANAGEMENT OPERATIONS

DATE: MARCH 27, 90

TO: JOE ODUM

FROM: J. A. PIKE
703-H, 78982

3 page(s) excluding cover sheet

PLEASE CALL (803) 557-1528 IF THERE IS ANY TROUBLE WITH THE RECEIPT OF THIS TRANSMITTAL.

5

FRIDAY

NEW H.L. EVAP

ITP

CRITICAL PATH ?

→ WW PERMITTING

HERB MORTIN -

HAWKINS -

WDD →

JEFF PIKE

7-8982

①

3-77
conv w/Monte

3. QUES

HLW TANK PERMITTING

ITP - waste Removal
NEXT STEP

- AIR PERMIT - a MUST
- PROCEED UNDER INTERIM STATUS
- INCLUDE AS BUILT IN WW PERMIT

IAL - Z AREA EXPERIENCE
SCDHEC POSITION -
CONST PERMIT + WW PERMIT
PRIOR TO COLD RUNS
→ WW PERMIT all same { CHEMICALS, SIMULANTS, ACTUAL WASTE

HLW EVAP - HARDEST CALL
POSITION
ON GOING ACTIVITIES -

LOOK AT INTERIM STATUS PERMIT
PERMIT OPP. EVAP
CONTINUE + INCLUDE IN WW WHEN
SUBMITTED

W HERB
MARTIN
8770

BUILD TIMELINES + Area
MTG w/ JIM JACKSON, HAWKINS, ODUM, MARTIN,
PIKE, W DANAWAY + PAUL DE
Agree ⟹ GO TO DOE

7-3

W-0517

Monte another copy from Tim G. rec'd. Wed.

1

BC first

INTER-OFFICE MEMORANDUM

SAVANNAH RIVER SITE

NMP-WMT-910300

– Original was sent to me, you, Danny & Faye –

April 2, 1991

To: J.V. Odum, 742-A

From: B.L. Lewis, 703-H

BLL by WBVP

Their current question is how about it? we/they ok? should they be doing something? Look at this & let's caw-cuss w/ Danny Tim —

ENVIRONMENTAL PERMITTING FOR THE IN-TANK PRECIPITATION FACILITY

The In-Tank Precipitation (ITP) Facility has already obtained or is in the process of applying for a number of environmentally related operating permits from the EPA/SCDHEC. Through this permitting effort the need to document a list of all environmental permits required for operation of the ITP facility has been identified.

Per an earlier conversation between Tim Gaughan (WMT) and Monte Hawkins (EPD) it was decided that Waste Management Technology (WMT) would provide the Environmental Protection Department (EPD) a current status of all the environmentally related permits that WMT believes pertain to the ITP facility. EPD would in turn, study the list of permits and later provide a memo detailing whether the ITP permitting effort is addressing all the relevant regulations that are required for startup and operation of the facility.

As of 3/18/91, the ITP facility is currently involved in 'Water Run Checkout' of the process, where water is introduced into most of the process lines to determine mechanical/construction problems prior to the actual operation of the facility. The beginning of chemical runs and startup of the facility is not known at this time although chemical runs may begin as early as mid-summer 1991.

Please find in Section 1 (pgs 2 & 3) of this memo a discussion of routine expected process emissions from the ITP facility to any environmental media. If at any time before or after startup of the facility, additional routine releases to the environment are identified, the EPD will be contacted for guidance on a case-by-case basis.

Please find in Section 2 (pgs 4-6) of this memo a discussion of the status of all the environmental permits that ITP personnel believe are required for operation of the process.

SECTION 1

Please find below a discussion of known routine releases to the environment attributed to the ITP facility.

a. Air Emissions

Through process knowledge and/or detailed calculations three (3) airborne constituents have been identified as routine emissions from the ITP Process: Benzene, Mercury and Tritium.

The estimated total amount of benzene vapor that will be vented to the atmosphere during normal operations at the ITP facility is ~ 23 ± 15% tons/year. A further breakdown of this figure by individual sources/stacks at the facility is supplied as Attachment # 1. It should be noted that this figure is based on normal conditions at the facility during routine operations.

Process knowledge has indicated that mercury emissions from the ITP facility during normal operations will be ~ 0 lbs/year. However, recent calculations from SRL have shown that by incorporating extremely conservative assumptions involving the vapor pressure of mercury in the stream, a total of no more than ~ 260 lbs/yr could possibly be emitted from the process. I have attached the pertinent SRL calculations for your review as Attachment # 2.

Recent calculations by WMT personnel (Attachment #3) have shown that the estimated total radionuclide release from the ITP facility will be ~ 12 Ci/yr, with tritium accounting for more than 99.9% of these emissions. Using these source term figures from WMT, an SRL computer model (Attachment #3) has indicated that the Effective Dose Equivalent at the SRS plant boundary attributed to operation of the ITP facility will be 4.3×10^{-4} mrem/yr.

b. Surface Water Discharges

There are no planned routine liquid discharges to any body of water during normal operation of the ITP facility. All process liquids, streams, and/or process chemicals are contained within the facility and its four waste tanks during normal operation of the process. At appropriate times, large volumes of washed precipitate and decontaminated salt solution are transferred to the DWPF and Saltstone respectively without any liquid releases to local streams, creeks, NPDES outfalls, tributaries or other surface waters.

c. Groundwater

T. JORDAN GW HAS NOT REVIEWED

Operation of the ITP facility will have no affect on the local geologic and/or groundwater situation of the H-Area Tank Farm or surrounding area.

d. Solid Waste Disposal

POLISHED CATALYST MATERIAL ~95 GENERATED

No solid waste streams that would be routinely generated and require special disposal have been identified at the ITP facility. It is believed that all solid wastes that will be continually generated by operation of the facility will be of a particular type and in small enough quantities that routine Waste Management/Tank Farm procedures for disposal of such waste will be sufficient.

SANDY CARROLL

Cross flow filters utilized at the ~~ITP facility~~ will require special disposal as a Mixed Waste form. ~~A separate program, with EPD input, has already been established to handle the disposal of these filters.~~

needs approval by EPA (TREATABILITY VARIANCE)

e. Underground Storage Tanks (UST)

The ITP facility has no (0) underground storage tanks under its direct custodial responsibility. I am uncertain how the RCRA UST Regulations apply (if at all) to the High Level Waste Tanks in the H & F Tank Farms. The Tank Farms currently have an approved RCRA Part A permit, that may cover this issue. If there are requirements of the UST regulations that must be addressed for the High Level Waste Tanks, this must be identified and discussed.

OK PER HAL

SECTION 2.

The following is a list of permits and their status that ITP personnel currently recognize as necessary for operation of the facility.

a. SCDHEC Industrial Wastewater Permit

An application for this permit is currently being finalized and routed for final WSRC approval. Despite the fact the H & F Tank Farms are currently under a RCRA Part A permit, the decision has been made not to begin 'hot' startup of the ITP facility until an approved SCDHEC Industrial Wastewater Permit has been granted by SCDHEC for the ITP facility. An approved Wastewater Permit would take the place of the current RCRA Part A permit.

NEED CONST. + OP PERMIT PRIOR TO CHEMICAL RUNS

b. SCDHEC Air Quality Control Permit

The ITP facility is currently completing construction under SCDHEC Bureau of Air Quality Control (AQC) Construction Permit #0080-0046-CD issued on 5/15/86 (Attachment #4), which limits the amount of benzene releases from the facility to 11.3 lbs/hr (~ 38 tons/yr). Since the issue date of this Construction permit, a number of process modifications have been made which significantly alters the amount of expected benzene emissions from the facility.

A 12/28/88 letter from S.R. Wright, DOE-ED to M.K. Batavia SCDHEC (Attachment # 4) commits WSRC to supplying current calculations on the sources of benzene emissions at the ITP facility when they become available as a revision to the original permit mentioned above. WSRC-WMT is currently routing a newly revised AQC permit application package, that contains the most current estimates for benzene emissions from the facility, for final WSRC approval. This permit details each individual source of benzene emissions from the facility and documents that the total expected annual release from the facility will be ~ 23 $\pm$ 15% tons/yr.

The ITP facility will not begin 'hot' operation until an approved AQC permit, based on the new information that will soon be submitted to them, is obtained from SCDHEC. PACKAGE SUBMITTED TO SCDHEC 4/1/91

There are is mention of mercury emissions in the earlier AQC Construction Permit or the newly developed and soon to be submitted AQC Permit application package for ITP. SCDHEC HAS NOT RESPONDED

c. NESHAP Benzene

Attached is letter (Attachment #5) from Gene Turner, DOE-ERD to Chuck Messick, DOE-HLW (12/21/90) addressing DOE's position on the applicability of this regulation to the ITP facility. ~~ITP personnel assume no requirements of this regulation need be addressed since the memo from Turner signifies that the regulation does not apply to the facility.~~

d. NESHAP Radionuclide

CALIBRATE HOT WIRE ANEMOMETERS FOR STACK FLOW MEASUREMENT

Attached is a copy (Attachment #6) of the approved NESHAP Radionuclide Permit for the DWPF facility (4/25/88 - W.A. Smith, EPA to R.L. Morgan, DOE). Information regarding the ITP facility was included in the Application for this permit. ~~ITP personnel are assuming that this permit applies to both the DWPF and the ITP facilities and that no further permitting~~ effort is required.

In a related effort, SRL computer modeling has indicated that given the source terms, the offsite contribution of radiological emissions from the ITP facility during normal operation will be 4.3 x 10^{-4} mrem/yr (Attachment #3).

A Sampling and Analytical Protocol to analyze radionuclide emissions from the ITP facility is currently being developed as required by the permit and will be provided to the EPA within the necessary time constraints.

The last time I had looked at the notification requirements of the permit, it said EPA must be notified 60 days prior to anticipated startup, and within 15 days after actual startup. If this or the mechanism for contacting the EPA (i.e. contact EPD) has changed please notify me of this.

e. NEPA Documentation

The ITP facility has a number of NEPA checklists (Attachment # 7) that have been completed over the life of the project. On June 15, 1984 a Memo-To-File was also issued by DOE for the facility, followed on April 18, 1985 by a Supplement to this M-T-F.

Discussion of the ITP facility and its environmental affects was also included in a document entitled "Analysis of the Environmental Impacts Resulting from Modifications in the DWPF" - January 1991. This document was to be the basis of a 'Supplemental Environmental Impact Statement (SEIS)' until a memo (Ziemer to Duffy 10/12/90 'NEPA Determination for the DWPF at the SRS') (Attachment #7) was received indicating that no SEIS would be necessary for the project. It is the belief of ITP personnel that no further NEPA documentation is required for operation of the facility.

f. Diesel Generators

The ITP facility has one (1) emergency power diesel generator near the 241-96H building that it will utilize during operation. I have attached a copy (Attachment #8) of a SCDHEC Air Quality Control Construction Permit (#0080-0046-CE) that allows for the construction of a 150kW diesel generator. I understand I must contact EPD at three weeks prior to initial operation of this unit to schedule an operating permit inspection with SCDHEC.

① LETTER TO NOTIFY ANTICIPATED DATE

② LETTER STATING THAT WERE PERMANENT IN SERVICE

To the best of my knowledge, the above listed permits are the only Environmentally related permits that the ITP facility has obtained or continues to pursue. Please review this memo and respond back to me with guidance on any deficiencies you have identified in the ITP permitting effort. Any additional questions on the status of the above listed issues or supplemental ITP process information may be obtained by contacting T.P. Gaughan (7-1638) of my staff.

cc:

T.P. Gaughan, 241-120H
ITP File Room, 241-120H

cc: w/out attach

R.C. Miller, 241-121H
N.R. Davis, 241-120H
W.B. Van Pelt, 241-121H
M. Hawkins, 742-A
J. McConathy, 742-A
C.B. Stevens, 703-H
K.S. Wierzbicki, 703-H
C.G. Lampley, 241-120H
M.B. Sammons, 241-120H
K.Z. Wolf, 704-S

ATTACHMENT #1

Benzene Emissions from the ITP Facility

- Figure 1-A: Figure of ITP Facilities with Benzene Emission Concentrations Labeled.
- Table 1-B: Table Indicating Sources of Benzene at ITP

Figure 1-A

Benzene Emission Sources at the In-Tank Precipitation Facilities

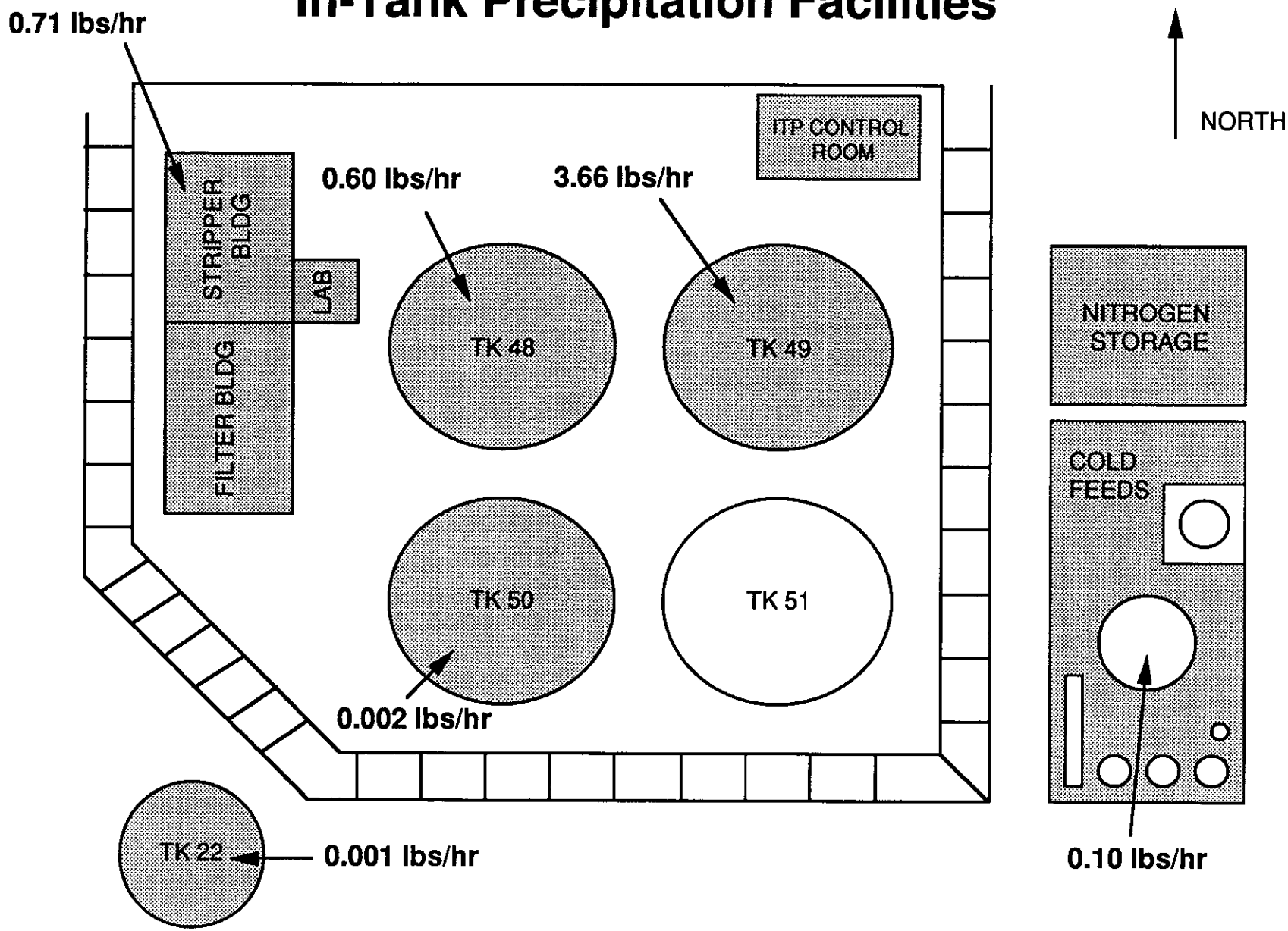

Table 1-B

Benzene Emissions at ITP

Emission rates listed below are for normal/routine operation of the ITP facility

Tank 49	**3.66 lbs/hr**	**500 cfm**
Stripper Building	**0.71 lbs/hr**	**14,000 cfm**
Tank 48	**0.60 lbs/hr**	**500 cfm**
Cold Feeds Area	**0.10 lbs/hr**	**NA**
Tank 50	**0.002 lbs/hr**	**300 cfm**
Tank 22	**0.001 lbs/hr**	**150 cfm**
	5.07 lbs/hr (~ 23 tons/yr)	

ATTACHMENT #2

Mercury Emissions from the ITP Facility

- Memo 2-A: IWT-LWP-91-034, Walker to Gaughan, 2/27/91, "Mercury Emissions from the In-Tank Precipitation Process"

2-A

WESTINGHOUSE SAVANNAH RIVER COMPANY
SAVANNAH RIVER LABORATORY

WT-LWP-91-034

INTER-OFFICE MEMORANDUM

February 27, 1991

TO: T. P. GAUGHAN, 241-120H

FROM: D. D. WALKER, 773-A Daniel D. Walker

Mercury Emissions from the In-Tank Precipitation Process

Mercury emissions from the In-Tank Precipitation (ITP) process will be less than 260 lbs per year from all sources. This estimate is based on conservative assumptions and the actual emissions will probably be far lower than the limit calculated.

Mercury enters the ITP process in the radioactive waste solutions as dissolved mercury(II), most likely as $HgO(OH)^-$ ion. It reacts completely with tetraphenylborate to give diphenylmercury (DPM). DPM is a stable, water-insoluble solid with a slight vapor pressure. The vapor pressure of liquid DPM has been measured (Ref.1) and was used to estimate the vapor pressure of solid DPM at 35°C. The method of extrapolating the available data overestimates the vapor pressure of the solid, so a conservatively high estimate of the mercury emissions will result. In addition, the calculations assume that the ventilation air in the waste tanks containing the DPM (Tanks 48 and 49) becomes saturated with DPM. This is also a conservative assumption since it is unlikely that saturation will be attained. The ventilation systems operate at high flow rates and the contact between DPM and the ventilation air is minimal. The DPM is mixed into the precipitate slurry which reduces contact with the air and retards mass transfer of the DPM to the air.

The method of extrapolating the vapor pressure data requires an estimate of the entropy of vaporization of the liquid (Ref.2). This estimate was made from structural correlations to other compounds found in the reference. Since the entropy of vaporization for the solid-to-vapor transition is greater than the entropy for the liquid-to-vapor transition, then the extrapolation of the available data to a temperature where the DPM is a solid will produce high estimates of the vapor pressure. Results of the calculations are given in Table I.

The calculated annual emissions of mercury from the ITP process were based on the conditions listed in Table I. The diphenylmercury will be present in two tanks, thus doubling the expected emissions. The total amount of mercury entering the ITP process is estimated to be 3200 lbs per year. About 8% of this will evaporate in the ventilation systems based on these calculations..

TABLE I **Bases and Results of Calculations**

Vapor pressure of DPM (Ref.1) 10 mm at

Vapor pressure equation for liquid DPM:

$$\ln P = -\frac{8220}{T} + 19.$$

where P = vapor pres in mm Hg°
T = temperatur °K

Vapor pressure at 35°C: 8×10^{-4} mm

Ventilation flow rate: 500 cfm

Temperature: 35°C

Annual emissions:
single tank: lbs Hg°
process total (2 tanks): lbs Hg°

The calculations reported here are recorde Laboratory Notebook #WSRC-NB-90-86, p.283-286.

References:

1. J. C. Bailar, *et al*, **Comprehensive In ic Chemistry**, Volume 3, Pergamon Press, Oxford, 1973, p.

2. Robert C. Weast, editor, **CRC Handbook hemistry and Physics**, 61st Edition, CRC Press, Boca Rat 980, p. D-192.

CC: D. L. Fish, 773-A
W.B. VanPelt, 240-121H
IWT-LWG Files

ATTACHMENT #3

Radionuclide Emissions from the ITP Facility

- Memo 3-A: OPS-WMT-900314, Hsu to Van Pelt, 5/4/90 "Expanded Radionuclide Atmospheric Release Estimates for In-Tank Precipitation/Extended Sludge Processing"

- Memo 3-B: SRL-ETS-900239, Marter to Gaughan, 6/5/90 "NESHAPS Dose Calculations for In-Tank Precipitation/Extended Sludge Processing"

3-A

OPS-WMT-900314

INTER-OFFICE MEMORANDUM
WESTINGHOUSE SAVANNAH RIVER COMPANY

4 May 1990

CC: G.T. Wright, 703-H
R.G. Garvin, 703-H
S.S. Cathey, 703-H
P.H. Stevens, 703-H
T.M. Osborne, 703-H
N.R. Davis, 241-120H
J.L. Lee, 703-H
W.H. Martin, 703-H
R.A. Scaggs, 703-H
P.D. d'Entremont, 703-H
A.Q. Goslen, 703-H
T.P. Gaughan, 241-120H
T.H. Killian, 703-H
Central Files, 703-A
L.F. Landon, 704-T
W.L. Marter, 773-42A
D.D. Walker, 773-A
J.R. Fowler, 704-Z
H.F. Teran, 704-S
D.J. Martin, 240-120H
WMT File Code 301.6, 703-H
ITP File 3.7, 241-120H

TO: W. B. Van Pelt, 241-121H

FROM: T. C. Hsu, 703-H TCH

Expanded Radionuclide Atmospheric Release Estimates
For In-Tank Precipitation / Extended Sludge Processing (U)

INTRODUCTION AND SUMMARY:

Calculations for radionuclide atmospheric releases from the In-Tank Precipitation and Extended Sludge Processing (ITP/ESP) facilities were performed to provide SRL with data to use the CAP-88 computer code to determine the effective dose equivalent (EDE) levels at the SRS plant boundary as well as to update the emission figures from the previous estimates [1,2]. If the sum of all EDE's is less than 0.1 mrem/yr, there is no further approval required from EPA prior to ITP/ESP startup [3,4,5]. The new estimated total radionuclide release at the sources is about 12 Ci/yr, with tritium contributing more than 99.9% of the activity released.

DISCUSSION:

Attached are the new estimates of radionuclides atmospheric releases from the purge ventilation systems of possible emission sources within the ITP/ESP complex, i.e. waste tanks, benzene stripper(s) and filtrate hold tank(s). See Figure 1. The radionuclide source terms in the DWPF Basic Data [6] provide the basis for Tanks 48/49 and Tanks 40/42/51. For the other emission locations, the transfer DF's (decontamination factors) from Tank 48 to other locations [7] as calculated by TAFI-II code [8], ETF data [9], and other available specifications [10,11,12] were also used to obtain the needed radionuclides concentration terms for their feed streams.

The assumptions or factors used in the emission calculations are as follows.

1. Tritium (^3H) experiences no filtration effects (DF = 1) across the liquid/vapor interface or any other filter medium. All ^3H in entrained liquid passes directly to the atmosphere. This assumption is commonly accepted, and therefore used in the present calculations.

2. In waste tanks, for all other radionuclides (excluding tritium) a DF of $1x10^6$ exists at the quiescent liquid/vapor interface at ambient temperature (Figure 2). Each tank is equipped with a demister on its outlet. This is conservatively based on the corresponding DF rated at $4.4x10^6$ [13,14] for boiling interfaces at much higher temperatures in an evaporator.

3. All waste tank purge ventilation systems operate with an entrained-water removal rate of 17 lbs/hr as indicated in Drawings No. W702247 and W708041. This is equivalent to $1.80x10^4$ gals/yr [1].

4. A DF of 1,000 exists across an exhaust HEPA (high-efficiency particulate air) filter system. This is a factor of three (3) less than the 99.97 % minimum filtration efficiency of a new HEPA filter (min. DF = 3,333) [15]. This reasonably conservative reduction in DF compensates for the non-idealities that will surely occur, e.g. filter degradation with time, particle size variations (particle < 0.30 μm will pass through HEPA), and small amounts of more volatile isotopes will also pass through a HEPA. This DF value is consistent with that used in DWPF calculations [2].

5. A DF of 70 exists across an exhaust HEME (high-efficiency mist eliminator) filter. This is again a factor of three (3) less than the 99.5% minimum filtration efficiency of a HEME filter (min. DF = 200) [16] as experimentally determined by vendor CECO Filters, Inc. See Appenix A.

6. In the benzene stripper, a DF of $1.0x10^4$ exists at the liquid/vapor interface as the thin liquid layer cascades downward over the large surface area provided by the packing (Figure 3). Though without reference documentation, this would seem to be reasonably conservative.

7. All isotopes other than ^3H experience the stated DF's of the liquid/vapor interface, HEPA and HEME filters, where applicable.

8. The radionuclide source terms for the DWPF sludge feed [6] apply to all three sludge processing Tanks 40, 42, and 51.

9. The source terms for the DWPF precipitate feed [6] apply to both Tanks 48 and 49.

10. Coming to the benzene stripper, the nitrogen purge gas, designed to be saturated with water vapor, still picks up 0.05 pound of water vapor per pound of dry N_2 gas in the packed column. At 128° F, the saturation humidity (at dew point) of air is 0.1 lb water/lb of dry air [12]. The pure nitrogen gas is assumed to have the same psychrometric characteristics as air, which is 78% nitrogen. For convenience, the maximum gas temperature is assumed to be 128° F. This conservative assumption of large moisture pickup compensates for any non-idealities that will surely occur, e.g. the humidifier was less than 100% efficient at times.

11. No flow-through purging exists in the filtrate hold tank, Figure 4. A volume of nitrogen gas above the liquid surface is displaced out into the off-gas exhaust system, only when a corresponding liquid volume comes into the tank. Therefore, the released gas volume is

assumed to be always saturated at 128° F with 0.1 lb water/lb dry N_2 gas. The annual operating time for the benzene stripper and filtrate hold tank system is about 2938 hours/year [17] at a design filtrate flowrate of 115 gpm [11].

12. There are two parallel benzene strippers and two parallel filtrate hold tanks but only one stripper and one filtrate hold tank will be in use at any one time. To be conservative, the larger N_2 purge rate of 440 scfm [11] for the benzene strippers is used in the calculations.

13. The initial sets of specific isotopic concentrations in the feed are identical for both the benzene stripper and the filtrate hold tank.

Using these assumptions and factors, the calculations were performed and the results are presented in Tables 1 through 9.

In the estimated annual activity released at ITP/ESP, Table 1, the tritium contribution is overwhelming at about 99.9%. This also implies that the portion that can be controlled practically is only about 0.1% of the total activity released. Locationwise, the main contributors are the Benzene Stripper at 3.58 Ci/yr, Tank 50 at 2.15 Ci/yr., Tanks 48, 49 and 22 each at 1.70 Ci/yr. At these locations of more than 1.0 Ci/yr., tritium practically accounts for 100% of the activity released. On the sludge side, Tanks 40, 42, and 51 have a lower activity release, each at about 0.4 Ci/yr with 99.1% contribution from tritium.

As to the next tier of high-activity isotope contributors after ^3H; Sr-90, Y-90, Cs-137, Ba-137M and Pm-147 stand out (Table 2), each at about 0.001 to 0.002 Ci/yr, accounting for 0.01 to 0.02% of the total activity released. The Ce-144 and Pr-144 contributions are present only from Tanks 40, 42, and 51. Comparing to tritium, they are almost insignificant. All the other unranked isotopes make smaller or much smaller contributions to the overall activity release. For Benzene Stripper, Filtrate Hold Tank and Tank 50, no isotope besides tritium makes any significant contribution in activity release. Therefore, the three locations are not included in Table 2.

For Tanks 40, 42 and 51 (Table 3) and Tanks 48 and 49 (Table 4), the lists of radionuclides and their initial specific feed activities are taken directly from Revision 91 of the Curie Balance [6] to the DWPF Basic Data.

For Tank 50 (Table 5), the list of radionuclides and their concentrations in feed was obtained by using the source terms for Tank 48 as the base and adding the well-used DF's for filtration of precipitate [7] and the ETF (Effluent Treatment Facility) data of the highest releases in the past 13 years for each radionuclide [9]. See Appendices B and C for these original data.

For Tank 22 (Table 6), the list of radionuclides in the feed was obtained by applying the DF's of the waste water filtration [7] to the base radionuclides list for Tank 48.

From the precipitate filter bank, the decontaminated salt solution (DSS) or the spent wash water (SWW) goes through the benzene stripper (a packed column) to release any benzene that may exist in solution, and the liquid stream is then sent to the filtrate hold tank for temporary storage. The DSS is sent to Tank 50, Figure 1. When the precipitate is washed, the SWW is sent to Tank 22. Therefore the radionuclide composition in the feed solution for both locations is basically identical. A hypothetical liquid solution of the DSS and the SWW retaining only the higher concentration of each isotope is used in the calculations (Tables 7 and 8). These isotopic concentrations for DSS and SWW were obtained from Hamm's memo [10]. See Appendix E. The SWW generally has lower concentrations than DSS for most isotopes except Cs-134, Cs-137, and Ba-137M.

In Table 9 for Tanks 40, 42 and 50, using the different DF values for HEPA and HEME filters makes only minute differences in the activity released; for other locations, no difference is obtained at all. This is due to the fact that for Tanks 40, 42 and 50, there is a 0.9% of the activity released by radionuclides other than tritium. In the case of benzene stripper, even reducing the DF for liquid/vapor interface to 1.0 increases only 10% of the reference activity released.

The various stack heights and diameters for the ITP and ESP are included, in Table 10, for the calculation needs of the CAP-88 computer code.

REFERENCES:

1. Van Pelt, W.B., Memo to S.M. O'Connor, "Radioactive Atmospheric Release Estimates," 3 Dec 1986.

2. Van Pelt, W.B., Memo to S.M. O'Connor, "Revised Radioactive Atmospheric Release Estimates," 9 Dec 1986.

3. Gaughan, T.P., Memo to W.B. Van Pelt, "NESHAP Radionuclide Guidance From EPS," 13 Feb 1990.

4. 40 CFR 61, Subpart H, 15 Dec 1989.

5. Roberts, J.S., Correspondence to W.A. Smith, EPA, Region IV, "Savannah River Site (SRS) Compliance With NESHAP Radionuclide Regulations," ESH-ESG-900054, 1 Feb 1990.

6. **DPST-84-971**, "Curie Balance", Rev. 91, 12/84, Stream 1 (washed sludge) and Stream 201 (washed precipitate). (Revision for **DPSP-80-1033**, Appendix G, Table 19-4)

7. Goslen, A.Q., Memo to T.C. Hsu, "ITP Decontamination Factors," 15 Feb 1990. See Appendix B.

8. Tharin, C.R., DP-966: "TAFI-II, A Computer Code For Management of Radioactive Waste," Aug 1965.

9. Brown, D.F., Memo to N.R. Davis, "Composition Range for ETF Concentrate to Tank-50 & Z-area," 5 Aug 1988, Table 4. See Appendix C.

10. Hamm, B.A., Memo to G.W. Earle and S.A. Thomas, "In-Tank Precipitation/Shielding Specifications," 14 Oct 1986. See Appendix D.

11. Stearns Catalytic Division, and (DuPont) Engineering Dept, "Overall Scope of Work for Savannah River Plant / Nitrogen PPurge and Benzene Stripping," DuPont No.: 9S3781/CCO#21, STEARNS CATALYTIC DIVISION NO.: 8244.054, REV. 0, 15 Apr 1988.

12. Perry, R.H. and C.H. Chilton, Chemical Engineers' Handbook, 5th Ed., McGraw-Hill Books, N.Y., 1973, p. 12-8.

13. Scaggs, R.A., "Waste Farm Digest," 9 Feb 1988.

14. DPSTSA-200-10, Sup-18, "SAFETY ANALYSIS - 200 AREA / SAVANNAH RIVER PLANT / SEPARATIONSS AREA OPERATIONS // LIQUID RADIOACTIVE WASTE HANDLING FACILITIES," Aug 1988, p. 3-52.

15. ERDA 76-21 (ORNL-NSIC-65-1), NUCLEAR AIR CLEANING HANDBOOK, 2nd Ed., Mar 1976, p. 17.

16. CECO Filters, Inc. Experimental Data. See Appendix A.

17. Walker, D.D. and B.A. Hamm, WSRC-RP-89-1303, "Material Balance and Planned Operating Schedule for the In-Tank Process (U)," 27 Dec 1989.

3-B

WESTINGHOUSE SAVANNAH RIVER COMPANY
SAVANNAH RIVER LABORATORY

SRL-ETS-900239

June 5, 1990

To: [redacted]

From: W.L. Marter, 773-42A

WL Marter

NESHAPS DOSE CALCULATIONS FOR IN-TANK PRECIPITATION/EXTENDED SLUDGE PROCESSING

In compliance with NESHAPS requirements ("National Emission Standards for Hazardous Air Pollutants; Radionuclides", 40CFR61, Federal Register Vol.54, No.240, December 15, 1989), offsite doses to the actual highest exposed individual were calculated with the CAP88 Code for In-Tank Precipitation/Extended Sludge Processing.

Source terms for 9 release points were provided by T.C. Hsu (Hsu, T.C., "Expanded Radionuclide Atmospheric Release Estimates for In-Tank Precipitation/Extended Sludge Processing", OPS-WMT-900314) with release heights varying from 3.05 to 27.43 meters. These source terms were totaled and those exceeding 1 uCi per year were used (see attached table). Calculations were made for a stack height of 3.05 meters. The effective dose equivalent commitment to the highest exposed individual was 4.30E-04 mrem (EDE).

CC: H.D. Harmon, 773A
A.L. Boni, 773A
Jeff Lee, 703A
EDG file

ATTACHMENT #4

SCDHEC Air Quality Control Permit (Benzene)

- Memo 4-A: Guidry to O'Connor, 6/9/86 "Revised Air Quality Control Construction Permit - In-Tank Precipitation Process"

- Memo 4-B: Wright to Batavia, 12/28/88 "Notification of Construction Permit Application Changes for the In-Tank Precipitation (ITP) Process at the Savannah River Plant - Permit Number 0080-0046-CD"

OSR 3-4A

E6
4-A

INTER-OFFICE MEMORANDUM

SAVANNAH RIVER PLANT

June 9, 1986

TO: S. M. O'CONNOR, 703-H
J. V. ODUM, 703-H

FROM: R. M. GUIDRY, 703-A
RMGuidry

REVISED AIR QUALITY CONTROL CONSTRUCTION
PERMIT - IN-TANK PRECIPITATION PROCESS

SCDHEC has revised the In-Tank Precipitation Air Quality Control Construction Permit to reflect that the benzene emission rate is an annual average. The revised permit is attached.

Please note Special Condition IIA.

Please report any errors or omissions to me at X5-1086.

RMG:ldh
Atts

CC: D. J. Martin, AED-WILM, WCCC III
M. B. Hughes, SRP, 703-A
M. Hawkins, 703-A
S. W. Hixson, 703-A
W. M. Wierzbicki, 703-H
Central Files, 703-A, A-027
File 0537g

South Carolina Department of Health and Environmental Control

2600 Bull Street
Columbia, S.C. 29201

Commissioner
Robert S. Jackson, M.D.

Board
Moses H. Clarkson, Jr., Chairman
Gerald A. Kaynard, Vice-Chairman
Oren L. Brady, Jr., Secretary
Barbara P. Nussale
James A. Spruill, Jr.
William H. Hester, M.D.
Euta M. Colvin, M.D.

OFFICE OF ENVIRONMENTAL CONTROL
BUREAU OF AIR QUALITY CONTROL
CONSTRUCTION PERMIT

Department of Energy, Savannah River Operations
P.O. Box A
Aiken, South Carolina 29802

Permission is hereby granted to alter tanks 48H and 49H to be used to precipate potassium and cesium with sodium tetraphenylbrate as a pre-treatm process in DWPF.

NOTWITHSTANDING ANY OF THE CONDITIONS LISTED BELOW, NO APPLICABLE LAW, REGULATION, OR STANDARD MAY BE VIOLATED.

CONDITIONS

1. All official correspondence, plans, permit application forms and written statements are an integral part of this permit.
2. THE DIRECTOR OF THE ENGINEERING SERVICES DIVISION MUST BE NOTIFIED IN WRITING UPON THE BEGINNING OF CONSTRUCTION AND THE STARTUP OF EACH PERMITTED FACILITY.
3. This construction permit shall expire one year from date issued, unless construction has begun and this agency has been notified.
4. An expired construction permit may be reactivated only upon the written request of the permittee, subject to all laws, regulations and standards applicable at the time of the reactivation.

(SEE PAGE 2 OF THIS PERMIT FOR ADDITIONAL CONDITIONS)

This is pursuant to the provisions of Section 48-1-110, 1976 Codes of South Carolina, as amended, and the South Carolina Air Quality Control Regulation 62.1, Section II.

CONSTRUCTION PERMIT NUMBER: 0080-0046-CD
PLANT LOCATION: H-Area
DATE OF ISSUE: May 15, 1985
DATE OF COMPLETION: October 31, 1987

William W. Culler

William W. Culler, P.E., Director
Engineering Services Division
Bureau of Air Quality Control

I. Standard Conditions

A. This permit expressly incorporates all the provisions of South Carolina Department of Health and Environmental Control Regulation 61-62.1, Section II, Paragraph D.

II. Special Conditions

A. Emissions Limitations

Air pollutant emissions shall not exceed the following:

ID Number	Pollutant	Emission Limitation
CD	~~Benzene~~	~~11.1 lb/hr, annual average~~
CD	Opacity	40% ~~(Method 9)~~

The above emission limitations are based on operation at rated capacity. Operation at other than rated capacity must meet the emission limits specified in the applicable regulations based on that operating rate. The actual pollutant emissions are less than or equal to emission limitations indicated above. If the Department determines at a later date that the actual emissions have increased to a degree that PSD might apply, then resubmittal of applications and additional controls might be required.

B. Continuous Monitoring Requirements
N/A

C. Additional Conditions
N/A

AU41420 4-B

DEC 28 1988

Lib 15
#872
ED/ECB
12/14/88

Mr. M. K. Batavia, Director
Division of Engineering and Services
Bureau of Air Quality Control
South Carolina Department of Health
and Environmental Control
2600 Bull Street
Columbia, SC 29201

8027

Dear Mr. Batavia:

NOTIFICATION OF CONSTRUCTION PERMIT APPLICATION CHANGES FOR THE IN-TANK PRECIPITATION (ITP) PROCESS AT THE SAVANNAH RIVER PLANT - PERMIT NUMBER 0080-0046-CD

Per discussions with B. W. Bedenbaugh of your staff and J.E. Layden of Department of Energy-Savannah River Operations Office, and M. Hawkins of the Savannah River Plant contractor on October 17, 1988, the enclosed information regarding changes to the ITP is provided for your use.

It became necessary to change the ITP process since the subject permit was issued. For fire safety purposes, a stripper unit operation has been added to reduce the concentration of benzene and other organics in the decontaminated salt solution. The stripper will discharge to the atmosphere via a new 90-foot stack. Also, there will be relatively minor emissions from two other waste tanks (Tank 22 and 50) and from raw materials tanks that were not identified in the original application. Laboratory studies are underway to quantify the releases from each emission point. It was agreed that a revision to the construction permit application will be submitted when the studies are completed. It should be emphasized that these changes are not expected to result in increased total emissions to the atmosphere. Construction of the ITP is underway and is expected to be completed in June 1989.

Questions from your staff may be directed to J. E. Layden (803/725-1730).

Sincerely,

Original Signed by
L. C. Mudell

S. R. Wright, Director
Environmental Division

EEC:JEL:gis

Enclosure

cc w/encl:
R. K. Cauthen, SCDHEC-Aiken

bcc w/o encl:
W. C. Reinig, Du Pont, SRP
J. S. Roberts, Du Pont, SRP
A. F. McClure, NUS
OCC (Concur) PROC (Concur) PED J. E. Layden, ED (A040947)
SR Reading File

CONCURRENCE	
RTG. SYMBOL	ECB
INITIALS/SIG.	JEL
DATE	12/14/88
RTG. SYMBOL	ECB
INITIALS/SIG.	LCG
DATE	12/15/88
RTG. SYMBOL	ED
INITIALS/SIG.	SRW
DATE	12/15/88
RTG. SYMBOL	OCC
INITIALS/SIG.	JB
DATE	12/19/88
RTG. SYMBOL	PROC
INITIALS/SIG.	
DATE	12/27/88
RTG. SYMBOL	
INITIALS/SIG.	
DATE	
RTG. SYMBOL	
INITIALS/SIG.	
DATE	
RTG. SYMBOL	
INITIALS/SIG.	
DATE	
RTG. SYMBOL	
INITIALS/SIG.	
DATE	

ATTACHMENT #5

NESHAP Benzene Interpretation

- Memo 5-A: Turner to Messick, 12/21/90 "Position Paper on NESHAPS Benzene Issue"

Tim Gaughan

5-A

Routing and Transmittal Slip

Date: 12/21/90

TO: (Name, office symbol, room number, building, Agency/ Post)	Initials	Date
1. Chuck Messick, HLW, 704/57S		
2.		
3.		
4.		
5.		

	Action		File		Note and Return
	Approval		For Clearance		Per Conversation
	As Requested		For Correction		Prepare Reply
	Circulate	x	For Your Information		See Me
	Comment		Investigate		Signature
	Coordination		Justify		

REMARKS

POSITION PAPER ON NESHAPS BENZENE ISSUE

FROM: (Name, org. symbol, Agency/ Post)	Room No.- Bldg.
	E142, 703-A
Gene Turner, ERD	Phone No. 5-3648

NESHAP BENZENE EMISSION STANDARDS - APPLICABILITY TO WASTE TREATMENT FACILITIES IN F/H, AND Z-AREAS AT SRS

INTRODUCTION

There are five subparts of the U.S. Environmental Protection Agency (EPA) Title 40 Code of Federal Regulations, Part 61 (40 CFR 61), National Emission Standards for Hazardous Air Pollutants (NESHAP) that address benzene emissions. These subparts are **J, L, Y, BB**, and **FF**. The effect of these subparts on the operations conducted as part of the Defense Waste Processing Facility (DWPF) and the In-Tank Precipitation (ITP) process are examined below.

40 CFR 61 SUBPART J - *National Emission Standard for Equipment Leaks (Fugitive Emission Sources) of Benzene*

This standard applies to equipment "in benzene service" that processes more than 1,000 Mg (~2,206,000 pounds) of benzene per year. The 1,000 Mg per year de minimis is a cumulative site total. Applicability of this standard requires compliance with Section 61.112, triggering requirements for a formal leak detection and repair (LDR) program utilizing procedures promulgated in NESHAP subpart V. ("In benzene service" is defined a piece of equipment that either contains or contacts a fluid (liquid or gas) that is at least 10 percent benzene by weight as determined according to the provisions of 61.245(d).)

- **DWPF.** The DWPF is exempt from compliance with emission standard 61.112, because the benzene production/process rate will be approximately 200 Mg/year, well below the 1,000 Mg/year de minimis. However, the DWPF is still subject to the recordkeeping requirements of 61.246(i) (Smith to Wright, December 7, 1989, A049967).

- **ITP.** The ITP is also exempt from emission standard 61.112 due to an anticipated annual process volume of less than 50 Mg/year of benzene, for an approximate site total of 250 Mg/year. This is below the de minimis level.

40 CFR 61 SUBPART L - *National Emission Standard for Benzene Emissions from Coke By-Product Recovery Plants*

The Savannah River Site (SRS) is not subject to this emission standard. This standard applies only to coke plant operations and therefore will not be discussed here.

40 CFR 61 SUBPART Y - *National Emission Standard for Benzene Emissions from Storage Vessels*

This regulation applies to storage vessels having a storage capacity of 10,000 gallons or more and containing benzene within a certain specific gravity range as specified by listed ASTM reference methods in 61.270(a). This standard pertains to storage vessels containing only benzene and not mixtures of benzene with other fluids.

- **DWPF.** This subpart is not applicable to the DWPF. The organic waste storage tank (OWST) receiving organic wastes generated by the DWPF has a capacity of 150,000 gallons. The OWST will contain a mixture of organics that will include but not be limited to benzene (approximately 85 percent). The standard applies to vessels containing benzene only, and so it does not apply.

Initials | Date
RDN | 12-17-
12-17-
COMMUNICATION EFFECTIVENESS

- **ITP**. This subpart is not applicable to benzene waste storage vessels (which includes two 10,000-gallon filtrate hold tanks and Tank 50, a 750,000-gallon filtrate storage tank) in the ITP area. Stored fluids are organic waste mixtures that also contain benzene.

40 CFR 61 SUBPART BB - *National Emission Standard for Benzene Emissions from Benzene Transfer Operations*

This emission standard applies to transfer operations at benzene production facilities processing liquids containing 70 weight-percent or more of benzene.

- Technically, this subpart does not apply to either the **DWPF** or the **ITP**, which are being permitted as wastewater treatment facilities and not benzene production facilities.

40 CFR 61 SUBPART FF - *National Emission Standard for Benzene Waste Operation*

This emission standard applies to chemical manufacturing plants, coke by-product recovery plants, and petroleum refineries and facilities at which wastes generated by the industries listed above are treated, stored, or disposed of.

- Subpart FF does not technically apply to either the **ITP** or the **DWPF** by the definition of the industries targeted by this standard. Both the DWPF and the ITP are being permitted/classified as wastewater facilities.

CONCLUSION

Among ITP and DWPF operations, there are no applications requiring SRS compliance with any of the NESHAP benzene standards. The storage vessels mentioned above will, however, have to comply with the requirements of 40 CFR 60, New Source Performance Standards (NSPS), Subpart Kb,-Volatile Organic Compound-Storage Vessels. Requirements for compliance are very similar to NESHAP Subpart Y.

Westinghouse
Savannah River Company

P.O. Box 616
Aiken, SC 29802

June 6, 1990

Mr. A. L. Watkins, Director
High level Waste Division
Savannah River Operations Office
U. S. Department of Energy
Aiken, SC 29802

Dear Mr. Watkins:

APPLICABILITY OF NESHAP BENZENE REGULATIONS TO DOE FACILITIES

On March 7, 1990, the EPA promulgated the revised National Emission Standards for Hazardous Air Pollutants (NESHAP) for benzene. Both the In-Tank Precipitation (ITP) and Defense Waste Processing Facility (DWPF) will produce atmospheric benzene emissions as part of their routine operation. The purpose of this letter is to inform the Department of Energy of our interpretation of this regulation and its applicability to ITP and DWPF.

It is the opinion of WSRC that this regulation and associated requirements and standards listed do not apply to DOE-owned and/or operated facilities.

It is understood that Subpart FF of the regulation entitled "National Emission Standard for Benzene Waste Operations" is the section that pertains to the ITP and DWPF processes. The first subsection in Subpart FF entitled "Applicability" (ss 61.340 Attachment 1) clearly defines the facilities to which these regulations apply:

> "(a) The provisions of this subpart apply to owners and operators of chemical manufacturing plants, coke by-product recovery plants, and petroleum refineries."

DOE-owned or operated facilities are not mentioned among the specific industry processes listed nor is any reference made to facilities for treatment, storage, or disposal of radioactive waste in the above "Applicability" section. Also, nowhere else in the regulation are there any references to the requirements and standards being relevant to DOE facilities.

Based on the above reasons, WSRC considers that this NESHAP regulation does not pertain to any process included in DOE-owned and operated facilities and that no effort to abate benzene emissions is legally required by this regulation's issuance.

As a best management practice, Waste Management plans to proceed with design of a system to satisfy requirements for benzene abatement. While not a requirement for startup, we consider the eventual installation of this system necessary to fulfill environmental requirements of the future.

If you have questions or require any additional information on this subject, please contact T. P. Gaughan, extension 7-1638, of my staff.

Yours very truly,

L. Papouchado

L. M. Papouchado, Manager
Waste Management Programs

GTW/aa

CC: L. C. Sjostrom, DOE-SR
S. R. Wright
E. W. Pottmeyer, Jr., WSRC
T. M. Anderson
R. Maher
G. T. Wright
C. B. Jones
D. L. McIntosh
W. L. Tamosaitis
J. S. Roberts
M. Cannon

ATTACHMENT #6

NESHAP Radionuclide Permit

- Memo 6-A: Smith to Morgan, 4/25/88 (U.S. EPA NESHAP Radionuclide Permit for DWPF)

file permits 6-A

UNITED STATES ENVIRONMENTAL PROTECTION AGENCY

REGION IV

345 COURTLAND STREET
ATLANTA, GEORGIA 30365

APR 25 1988

4APT-AC

Mr. R. L. Morgan, Manager
Savannah River Operations
U.S. Department of Energy
PO Box A
Aiken, South Carolina 29802

Dear Mr. Morgan:

In accordance with the provisions of 40 CFR 61, we have reviewed information submitted on July 25, 1986; October 22, 1986; March 27, 1987; July 7, 1987; August 18, 1987; and October 1, 1987, to determine the ability of the Defense Waste Processing Facility (DWPF) to comply with the NESHAP-radionuclide emission standards promulgated at 40 CFR 61, Subpart H. Based on this review, approval is hereby given for the construction/operation of the DWPF at the DOE-Savannah River Plant. In addition to the provisions of 40 CFR 61, Subparts A and H, the following terms and conditions apply:

1. The facility shall be designed, constructed, and operated as described in the NESHAP application dated March 27 1987, and additional information dated October 1, 1987; August 18, 1987; July 7, 1987; October 22, 1986; and July 25, 1986 (hereinafter referred to as the Application), unless superseded by a more stringent condition below.

2. The facility shall be provided with performance testing facilities as follows:

   a. Sampling ports adequate for test methods applicable to such facility.

   b. Safe sampling platform(s).

   c. Safe access to sampling platform(s).

   d. Utilities for sampling and testing equipment.

3. Within 90 days after facility startup, the Applicant shall conduct a series of stack tests to verify the stack emission estimates in the Application and to demonstrate that the continuous monitoring system proposed in the Application will collect all radionuclides emitted in significant quantities from the facility. Since the proposed continuous monitoring system will collect only filterable material, the stack tests shall be designed to measure emission rates of filterable and nonfilterable particulate radionuclides, radioactive iodine and tritium. Three samples for each of these radionuclide categories shall be collected. If the maximum radionuclide dose equivalent of non-filterable material (as measured by the stack sampling required in this approval condition) exceeds 1/100 of the NESHAP whole body or critical

organ dose standard, continuous monitoring in addition to that proposed in the Application may be required by EPA. No later than 30 days prior to the stack tests, DOE shall submit for EPA approval, a sampling and analytical protocol for the initial radionuclide emission tests. Within 30 days after completion of the testing, a report summarizing emission rates of all radionuclides detected shall be submitted to EPA.

4. Continuous stack sampler filters shall be recovered and analyzed weekly, or more frequently if necessary, and analyses shall be performed to determine the emission rate of all radionuclides present in the sample. Thirty (30) days after the end of each calendar quarter, the Applicant shall report the release rates from the facility (expressed as curies per month for each radionuclide emitted) during each of the previous three months. If the quarterly reports indicate that the radionuclide dose due to the facility is well below the applicable standards, EPA will, upon a written request from DOE, consider a less frequent reporting schedule.

5. No condition presented herein precludes the Applicant from adherence to additional or more stringent conditions or requirements of any other Federal, State or local approval or permit.

6. Failure to comply with the conditions of this approval may result in revocation of the approval and/or enforcement action by the Agency.

7. At all times, including periods of startup, shutdown and malfunction, the facility shall be maintained and operated in a manner consistent with good air pollution control practices for minimizing emissions.

8. All notifications, reports, and correspondence shall be submitted to the Chief, Air Compliance Branch, Air, Pesticides and Toxics Management Division, U.S. EPA, 345 Courtland Street, NE, Atlanta, Georgia 30365, with copies to the Director, South Carolina Bureau of Air Quality and Director, South Carolina Bureau of Radiological Health.

This approval is granted solely under Section 112 of the Clean Air Act and implementing regulations at 40 CFR 61, and in no way affects approvals under other Federal or State regulatory authorities.

If you have any questions concerning this approval, please contact me at FTS: 257-3043.

Sincerely yours,

Winston A. Smith

Winston A. Smith, Director
Air, Pesticides and Toxics
Management Division

cc: Mr. J. Layden
U.S. Department of Energy
Aiken, South Carolina

Mr. S. R. Wright
U.S. Department of Energy
Aiken, South Carolina

Mr. O. Pearson
Bureau of Air Quality Control
SC Department of Health and
Environmental Control
2600 Bull Street
Columbia, South Carolina 29201

Mr. H. Shealy
Bureau of Radiological Health
SC Department of Health and
Environmental Control
2600 Bull Street
Columbia, South Carolina 29201

ATTACHMENT #7

NEPA Documentation

- Memo 7-A: Martin to SRL NEPA and Safety Analysis Coordinators, 12/27/83 "In-Tank Precipitation Interim Waste Management Programs"

- Memo 7-B: Anderson to Crawford, 7/9/84 "NEPA Status In-Tank Precipitation Tank 48, 241-H" (Memo-To-File)

- Memo 7-C: Olson to Porter, 4/24/85 "NEPA Status Supplement to Memorandum to File, In-Tank Precipitation, Tank 48H, 241-H Project S-3781"

- Memo 7-D: Murdock to Martin, 3/8/89 "NEPA Environmental Evaluation Spare In-Tank Precipitation Filters 241-96H Project T-0027"

- Memo 7-E: Murdock to Osborne, 3/28/89 "NEPA Environmental Evaluation In-Tank Precipitation, Safety and Environment Enhancement, 241-H Project S-1588"

- Memo 7-F: Murdock to Johnson, 4/2/89 "NEPA Environmental Evaluation Fire Suppression System, In-Tank Precipitation 241-H Project S-1588 (Partial)"

- Memo 7-G: Ziemer to Duffy, 10/12/90 "National Environmental Policy Act (NEPA) Determination for the Defense Waste Processing Facility (DWPF) at the Savannah River Site"

DON'T SAY IT—WRITE IT

7-A

TO SRL NEPA AND SAFETY ANALYSIS COORDINATORS

DATE DECEMBER 27, 1983

AT

FROM D. J. MARTIN, 704-8H DJM

mmy

IN-TANK PRECIPITATION
INTERIM WASTE MANAGEMENT PROGRAMS

Attached is the NEPA Safety Analysis and Permits checklist for the subject project. Also included is a copy of the Basic Data Report. Please forward any questions to the writer at extension 6591.

DJM:jg
0152j:0042d

CC: (Cover letter and checklist only)
G. M. Johnson, 704-8H
P. J. Shippy, 704-8H
N. R. Davis, 704-2H
P. D. D'Entrement, 704-8H
C. J. Heng, 704-2H

NEPA, SAFETY ANALYSIS AND PERMITS CHECKLIST

ACTIVITY TITLE IN-TANK PRECIPITATION	ACTIVITY NUMBER EWR 861360
CUSTODIAN (NAME AND ORGANIZATION) WASTE MANAGEMENT OPERATIONS, G. M. JOHNSON	DATE 12/20/83
LOCATION BUILDING 241-H	PHONE NUMBER 6591

ACTIVITY DESCRIPTION (INCLUDE PURPOSE, NEED, LOCATION (PROVIDE MAP OR FIGURE IF APPLICABLE), SCHEDULE, COST, ETC. (USE ADDITIONAL SHEETS IF NECESSARY)

DESCRIPTION

This project will provide facilities in the 241-H tank farm to decontaminate waste salt solutions that have been aged a minimum of 15 years. The process uses sodium titanate to absorb strontium and sodium tetraphenylborate to precipitate cesium. The high activity precipitate will be fed to the DWPF for encapsulation in glass. The low level decontaminated salt solution will be fed to Z Area and converted to saltstone. (See attached Basic Data for additional information.)

SCOPE

This project will provide transfer pumps and slurry pumps in Tank 48 (processing tank) and Tank 49 (precipitate storage tank), precipitate filters and a filter containment cell, upgraded waste tank ventilation, chemical storage and handling facilities, and equipment to monitor for hydrogen and benzene in the waste tank purge exhaust. Same facilities remaining on Tank 48 which were used in the Salt Decontamination Demonstration will be reused.

SCHEDULE

Projected milestones for this project are:

CAC Estimate	9/84
Project Authorization	1QTRFY85
Begin Construction	3QTRFY85
Mechanical Completion	6/87

COST

An informal Venture Guidance Appraisal estimated these facilities to cost $22 million.

The Current Appraisal of Cost Estimate will be completed in September of 1984.

0142j:0042d

INSTRUCTIONS

1. If the activity results in all NO's being checked or is a direct replacement which will have equal or less impacts (indicate this in the project description), attach completed checklist to project approval papers and send copies of checklist to.

SRP NEPA Coordinator	703-34A
SRL NEPA Coordinator	773-18A
SRL Safety Analysis Coordinator	773-26A

2. If any item is checked YES, and activity is not replacement action, contact EAD NEPA Coordinator, ext: 2457 and/or Safety Analysis Coordinator, ext: 1359, to discuss providing supplemental information so that SRL-EAD can coordinate the appropriate environmental or safety analysis documentation. Send copies of the completed check list and supplemental information to the coordinators listed in (1) above.

3. For permit requirements, contact the SRP Environmental Coordinator's Office, ext: 2568.

NEPA, SAFETY ANALYSIS AND PERMITS CHECKLIST

Checklist Instructions: Place an X in the appropriate column for the activity under evaluation

ENVIRONMENTAL EVALUATION	NO	YES
Air Emissions (except uncontaminated ventilation air)		X
Liquid Releases to Streams, Seepage Basins, Storm Drains, Process Sewers, Wetlands, Groundwater, Ponds, Lakes	X	
Solid or Liquid Waste Burial or Storage		X
Storage of Chemicals or Petroleum Products		X
Site Clearing, Excavation, Filling or Draining, Wetlands/Floodplains, Borrow Pits, etc.		X
Increased use of groundwater or river water		X
SAFETY ANALYSIS (This section not required for Test Authorizations)		
Part of Existing Designated Facility (DF)		
Alters any section of the Safety Analysis Report for the DF		X
New Facility		
Involves the use, handling or storage of		X
— fissionable materials	X	
— fission products		X
— special nuclear materials	X	
Has potential for radiation exposure to		
— operating personnel		X
— personnel outside the facility		X
Uses or produces toxic or corrosive materials that could result in exposure to		
— operating personnel		X
— personnel outside the facility	X	
Involves flammable or explosive materials that could impact adversely on		
— operating personnel		X
— adjacent facilities		X
PERMITS REQUIRED		
Air Emissions		X
Liquid Releases (NPDES modification)	X	
Spill potential (oil, chemicals, etc.)		X
Construction		X
Wetlands Impact (Env. Coord. and EAD review)	X	
Hazardous Waste — RCRA (storage, handling, treatment, etc.)	X	
Other	X	

If the activity is a direct replacement or will have equal or less environmental or safety impact than already exists, please sign and date here.

Name _____ Date _____

(If signed and dated, no additional action on this checklist is required)

7-B

TECHNICAL DIVISION
SAVANNAH RIVER LABORATORY

CC: J. T. Granaghan, SRP 703-A
J. T. Lowe, SRL 773-A
J. L. Crandall 773-A

July 9, 1984

TO: T. V. CRAWFORD

FROM: M. M. ANDERSON MM Anderson

NEPA STATUS
IN-TANK PRECIPITATION
TANK 48, 241-H

With the writing and approving by DOE/SR of a Memorandum-to-File (MTF), the NEPA documentation for this project has been completed. This MTF (copy attached) is based on a draft prepared by SRL-EAD and transmitted to G. A. Smithwick by you on April 3, 1984.

JSM/tl

Department of Energy
Savannah River Operations Office
P.O. Box A
Aiken, South Carolina 29802

JUN 15 1984

MEMORANDUM-TO-FILE

COMPLIANCE WITH THE NATIONAL ENVIRONMENTAL POLICY ACT
IN-TANK PRECIPITATION, TANK 48-H, SAVANNAH RIVER PLANT (SRP)

PROJECT DESCRIPTION

The proposed action is to use Tank 48-H to decontaminate waste salt solutions going to the Z-Area Salt Solidification Facility. This project will provide new waste treatment facilities and improve long-term waste storage methods in the SRP waste tank farms. New facilities will consist of transfer pumps; slurry pumps; a filter containment cell; filters; upgraded ventilation; chemical storage, handling, and monitoring facilities; and equipment to be installed in and near Tanks 48 and 49.

During the in-tank precipitation process, radioactive cesium will be precipitated from waste salt solutions that have been aged a minimum of 15 years. Waste salt solution will first be diluted in Tank 48 with water to reduce the sodium concentration, a sodium titanate (ST) slurry then will be added to adsorb strontium and plutonium and a sodium tetraphenylborate (STPB) solution will then be added to precipitate cesium. The precipitate containing strontium, cesium, and plutonium will then be transferred to the Defense Waste Processing Facility (DWPF) for incapsulation in glass. The decontaminated salt solution will be filtered in the filter containment cell and, if within specifications, will go to the filtrate hold tank, Tank 50, and then to Z-Area for conversion into saltstone. Previous experiments in Tank 48 have demonstrated the in-tank precipitation process.

ENVIRONMENTAL EFFECTS

These waste treatment facilities will be constructed wholly within the H-Area Tank Farm, a developed and controlled area. Temporary construction impacts such as noise, dust, and fumes will be controlled to minimal levels. No adverse effects are expected on SRP wildlife, wetlands, or archeological sites. The STPB solution will be stored in a 100,000 gallon tank and the ST slurry in a smaller tank.

No significant airborne radioactive releases are expected. Radioactive air emissions from these tanks will be removed by an upgraded tank ventilation system, passed through High Efficiency Particulate Air (HEPA) filters, and released from a stack monitored continuously for these emissions.

Nonradioactive air emissions are not expected to be significant. Tetraphenylborates and the byproduct benzene will be released through the Tank 48 purge and exhaust stack. Total benzene releases are expected to be 1-6 tons/year, or 0.2 ppm well below the threshold limit value (TLV) of 10 ppm. Methanol will vaporize from the ST solution at a rate of 0.22 lbs./hour, or 1,908 lbs/year. Air samples will be taken periodically to confirm these emissions are as low as expected.

An air emissions permit for the in-tank precipitation process will be obtained from the State of South Carolina Department of Health and Environmental Control. No liquid or solid waste releases are expected from these tanks as a result of this process other than the precipitate to be transferred to the DWPF and the salt solution to be transferred to Z-Area. Spill containment will be provided by the existing storm water collection system and spill prevention and control measures will be in effect.

NEPA DETERMINATION

The environmental effects associated with the construction and operation of the in-tank precipitation process and its facilities have been reviewed and found to be very small. This in-tank precipitation process occurs wholly within the H-Area Tank Farm and is a part of a general improvement program in waste treatment and management in the SRP tank farms. No significant adverse effects are expected on ambient air quality as a result of this project. Processing of the SRP high-level radioactive waste in the tank farms is discussed by the "Final Environmental Impact Statement, Defense Waste Processing Facility, Savannah River Plant," DOE/EIS-0082. This Memorandum-To-File is thus considered to be the appropriate document to satisfy the requirements of NEPA.

REFERENCES

Final Environmental Impact Statement, Defense Waste Processing Facility, Savannah River Plant, DOE/EIS-0082, Washington, D. C., 1982.

Approved Memorandum-To-File, Salt Decontamination Demonstration, Tank 48-H, Project S-3437, Savannah River Plant, 1983.

DPSOP 158-2, SRP Industrial Hygiene, Hazardous Materials.

Basic Design Data for Current Appraisal for Cost, Defense Waste Processing Facility, In-Tank Precipitation, Petrochemicals Department, SRP, June 1983.

Environmental Monitoring in the Vicinity of the SRP, DPSPU 83-30-1, Annual Report for 1982.

Salt Decontamination Demonstration Test Results, Tank 48-H, SRP, DPSP 83-17-8, 1983.

Threshold Limit Values for Chemical Substances and Physical Agents in the Work Environment with Intended Changes for 1983-4, American Conference of Governmental Industrial Hygienists, Page 11.

CONCURRENCE:

M. J. Sires, AMHS&E

APPROVAL:

E.S. Goldberg, AMQ

EEN:PKS:sbh

Distribution:
M. M. Anderson, Dupont, SRL
G. A. Smithwick, OE, SR
C. G. Halsted, P&W, SR

7-C

INTER-OFFICE MEMORANDUM

SAVANNAH RIVER PLANT

April 24, 1985

TO: J. A. PORTER, 703-A

FROM: H. P. OLSON, 773-42A

H. P. Olson

NEPA STATUS
SUPPLEMENT TO MEMORANDUM-TO-FILE
IN-TANK PRECIPITATION, TANK 48H, 241-H
PROJECT S-3781

With the writing and approving by DOE-SR of a Memorandum-to-File (MTF), the NEPA documentation for this activity has been completed. This MTF (copy attached) is based on a draft prepared by Environment and Energy Department personnel and transmitted to R. P. Whitfield by J. A. Porter on February 25, 1985.

JSM:pbm

CC: H. L. Eleuterio - S. Mirshak, Wilm
J. E. Conaway
I. B. New
G. J. Hollod, PD
T. V. Crawford, SRL, 773-A
W. R. Stevens, 773-A
R. B. Ferguson, 773-A
J. T. Granaghan, SRP, 703-A
R. Maher, 703-A
D. L. McIntosh, 703-A
O. M. Morris, 703-H
W. B. Boore, 703-F
J. N. Beatty, 703-H
G. M. Johnson, 703-H
G. B. Lowery, 703-H
D. J. Martin, 703-H
J. S. Roberts, 703-A
S. W. Hixson, 703-A
H. P. Olson, 773-42A
J. S. Murdock, 773-42A
NEPA Group, 773-42A
NEPA File, 773-42A
Central File, 703-A, A-027

Department of Energy
Savannah River Operations Office
P.O. Box A
Aiken, South Carolina 29802

APR 18 1985

SUPPLEMENT TO AN APPROVED MEMORANDUM-TO-FILE (MTF)

IN-TANK PRECIPITATION, TANK 48-H, (H-AREA), SAVANNAH RIVER PLANT (SRP)
COMPLIANCE WITH THE NATIONAL ENVIRONMENTAL POLICY ACT (NEPA)

ACTION DESCRIPTION

Recent research studies have revised expected benzene emissions from future waste salt processing operations to occur in tank 48-H in the H-Area Tank Farm. In the approved MTF, In-Tank Precipitation, Tank 48-H, estimates of benzene releases and concentrations were stated as 1 to 6 tons/year, or 0.2 ppm. This Supplemental MTF revises these releases to an estimated 38 tons/year, or a 0.32 ppm average over an 8 hour period, which is below the Threshold Limit Value (TLV) of 10 ppm for benzene. It is now expected that tank 49, the precipitate storage tank, will release 31 tons/year of benzene and tank 48, the processing tank, will release 7 tons/year.

ENVIRONMENTAL EFFECTS

Based on these revised benzene releases and concentrations of 38 tons/year and 0.32 ppm average over an 8 hour period, environmental releases associated with these salt processing operations will remain below benzene's TLV of 10 ppm and thus, remain insignificant. Although these revisions are significantly higher than the original estimates, maximum ground level concentrations are now expected to average 0.87 ppm over 15-30 minutes, 0.32 over an eight hour period, and 0.009 ppm at the nearest site boundary. An air emissions permit will now be obtained from the South Carolina Department of Health and Environmental Control (SCDHEC) for 38 tons of benzene/year. An air emissions permit for benzene releases of 36 tons/year has already been approved by SCDHEC for the Defense Waste Processing Facility. Cumulative impact evaluations for both of these operations show that maximum benzene concentrations are still expected to be below the TLV of 10 ppm.

NEPA DETERMINATION

The environmental effects associated with the revised higher benzene releases from waste salt in-tank precipitation processing in tank 48-H and storage in tank 49-H in the H-Area Tank Farm have been reviewed and found to be clearly insignificant and do not change the finding of no significant impact as stated

in the approved MTF. This is not a major Federal action significantly affecting the quality of the human environment. This supplemental MTF documents that the greater in-tank precipitation benzene emissions have been analyzed and evaluated in the environmental analysis and that this document is the appropriate document to satisfy the requirements of NEPA.

REFERENCES:

Memorandum, D. D. Walker to M. A. Ebra, Radiolysis of Tetraphenylborate University of Florida Trip Report, DPST-84-827, October 18, 1984.

Memorandum, D. J. Martin to J. S. Murdock, Project S-3781, In-Tank Precipitation Benzene Emissions, January 16, 1985.

Memorandum, W. L. Pillinger to J. S. Murdock, Determination of Benzene Concentrations, November 20, 1984.

CONCURRENCE:

C. G. Halsted APR 18 1985
C. G. Halsted, AMHS&E

APPROVAL:

M. J. Sires, AMO APR 18 1985

DISTRIBUTION:
J. S. Roberts, Du Pont, SRP

EEN:PKS:gsp

BCC Distribution: Letter from H. P. Olson to J. A. Porter, NEPA Status, Supplement to Memorandum-to-File, In-Tank Precipitation, Tank 48H, 241-H, Project S-3781. April 24, 1985.

BCC: H. L. Eleuterio - S. Mirshak, Wilm
J. E. Conaway
I. B. New
G. J. Hollod, PD
J V Crawford
W. R. Stevens, SRL, 773-A
R. B. Ferguson, 773-A
Gramagno
R. Maher, SRP, 703-A
D. L. McIntosh, 703-A
O. M. Morris, 703-H
W. B. Boore, 703-F
J. N. Beatty, 703-H
G. M. Johnson, 703-H
G. B. Lowery, 703-H
D. J. Martin, 703-H
J. S. Roberts, 703-A
S. W. Hixson, 773-42A
H. P. Olson, 773-42A
J. S. Murdock, 773-42A
NEPA Group, 773-42A
NEPA File, 773-42A
Central File, 703-A, A-027

(0004p)

OSR 3-4A

7-D

INTER-OFFICE MEMORANDUM

SAVANNAH RIVER PLANT

March 8, 1989

TO: D. J. MARTIN, WMP, 703-H

FROM: J. S. MURDOCK, NEPA, 773-42A

NEPA ENVIRONMENTAL EVALUATION
SPARE IN-TANK PRECIPITATION FILTERS, 241-96H
PROJECT T-0027

An Environmental Evaluation Checklist (NEPA, Waste Management, Safety Analysis and Permits) was received for this project to provide two replacement In-Tank Precipitation Filters (241-94H) to serve as spares. On-hand spares of this unique, long lead time filter is necessary to maintain facility operation.

A review by the NEPA and Permits Groups of the Environment and Energy Department determined that this project will not result in any significant adverse environmental impact. In the context of NEPA, this project is not considered a major Federal action significantly affecting the quality of the human environment. This project qualifies as a categorical exclusion under DOE Section D Guidelines (general plant project - spare equipment). Therefore, no additional NEPA documentation will be required.

No environmental permits will be required.

JSM:gjc

CC: T. V. Crawford, SRL, 773-A
W. R. Davis, SRP, 703-H
J. H. Griffin, 241-120H
G. M. Johnson, 703-H
G. H. Street, 703-H
G. W. Faulk, 703-H
B. C. Osborne, 704-H
W. C. Reinig, 703-A
J. S. Roberts, 703-A
D. E. Gordon, 703-52A
M. Hawkins, 703-A
NEPA Group, 773-42A
NEPA File, 773-42A
Central Files, 703-A, A-027

OSR

7-E

DU PONT

INTER-OFFICE MEMORANDUM

SAVANNAH RIVER PLANT

March 28, 1989

TO: B. C. OSBORNE, WMP, 704-H

FROM: J. S. MURDOCK, NEPA, 773-42A

NEPA ENVIRONMENTAL EVALUATION
IN-TANK PRECIPITATION, SAFETY AND ENVIRONMENT ENHANCEMENT, 241-H
PROJECT S-1588

An Environmental Evaluation Checklist (NEPA, Waste Management, Safety Analysis and Permits) was received for this project to provide safety and environmental enhancements for new concerns for In-Tank Precipitation (ITP). These changes do not change the original finding of no significant environmental impact and therefore, supplemental NEPA documentation is not required. The enhancements include such items as nitrogen purging of tanks, nitrogen blanket of chemicals, liquid nitrogen storage facility, benzene stripping facility, upgrading instrument and electrical equipment, ventilation and a source of water for fire fighting. The vent stack for Tank 48 will be increased from 25 to 55 feet above grade. The maximum groundlevel 8 hour concentration of benzene has been calculated from dispersion studies to be 0.48 ppm. This is below the OSHA action level of 0.5 ppm.

A review by the NEPA and Permits Groups of the Environment and Energy Department determined that this safety and environment enhancement will not result in any significant adverse environmental impact. In the context of NEPA, this project is not considered a major Federal action significantly affecting the quality of the human environment. This project qualifies as a categorical exclusion under DOE Section D Guidelines (general plant project - previously assessed). Therefore, no additional NEPA documentation will be required.

Environmental permits have been obtained as part of Project S-3781, In-Tank Precipitation, 241-H but, it will be necessary to revise the existing SCDHEC Air Quality Control Permit previously issued to include the additions and changes included in the project.

References:

- Basic Data, S-1588, Nitrogen Purge, Benzene Stripping/Tank 50 Agitation, WMP-88-2063, August 15, 1988.

- Air Dispersion Modeling of Benzene Emissions, United Engineers and Constructors, Stearns Catalytic Division, January 1989.

- Dispersion Calculations Report, United Engineers and Constructors, July 1, 1988.

- Memorandum-To-File, In-Tank Precipitation, Tank 48-H, SRP (Project S-3781), June 15, 1984.

- Supplement to Memorandum-To-File, In-Tank Precipitation, Tank 48-H (H-Area), SRP, April 18, 1985.

JSM:gjc

CC: T. V. Crawford, SRL, 773-A
G. M. Johnson, SRP, 703-H
J. E. Black, 703-H
J. H. Griffin, 703-H
N. R. Davis, 703-H
O. M. Morris, 703-H
T. H. Killian, 703-H
J. A. Porter, 703-A
J. S. Roberts, 703-A
D. E. Gordon, 703-52A
M. Hawkins, 703-A
NEPA Group, 773-42A
NEPA File, 773-42A
Central Files, 703-A, A-027

OSR 1-4A

DU PONT

INTER-OFFICE MEMORANDUM

SAVANNAH RIVER PLANT

March 28, 1989

TO: J. S. ROBERTS, 703-A

FROM: D. E. GORDON, 703-52A

ENVIRONMENTAL FACTOR NOT APPLICABLE
IN-TANK PRECIPITATION, SAFETY AND ENVIRONMENT ENHANCEMENT, 241-H
PROJECT S-1588

Four environmental factors on the Environmental Evaluation Checklist for this project was checked YES. These enhancements will address safety and environmental concerns for In-Tank Precipitation since the original and supplemental NEPA documentation was prepared. However, the environmental factors checked YES do not change the original decision of no significant impact. Benzene is still released but the dispersion calculation shows the concentration at ground level is less than the 0.5 ppm OSHA action level. Nitrogen will be released to the atmosphere but is not a concern. Liquid nitrogen will be stored and Best Management Practice procedures contain any leakage. The change in liquid release will be only condensate.

These factors are not considered applicable and an Environmental Evaluation Impact Analysis (EEIA) will not be prepared.

DEG:JSM:gjc

DON'T SAY IT - WRITE IT

To:
N.R. Davis, 703-H
D.J. Martin, 703-H
B.A. Hamm, 703-H
J.H. Griffin, 703-H
From:
T.H. Killian, 703-H

Date: 11/4/88

TO: John Murdock, 773-42A

FROM: Monte Hawkins, 703-A MH

PROJECT S-1588 IN-TANK PRECIPITATION, SAFETY AND ENVIRONMENTAL ENHANCEMENT

Based on a review of the permits checklists submitted for the subject project no adverse environmental impacts were identified.

It will be necessary to revise the existing SCDHEC Air Quality Control Permit previously issued for the ITP process to include the additions and changes included in this project.

cc: J. E. Hoisington, 703-A
W. D. Dunaway, 703-A
W. J. Maloney, 703-A
J. C. Huang, 703-A
B. C. Osborne, 704-H
T. H. Killian, 704-H
W. M. Wierzbicki, 704-H

INTER-OFFICE MEMORANDUM

SAVANNAH RIVER PLANT

WMP-88-2261

October 25, 1988

TO: J. S. Murdock, SRP NEPA Coordinator, 773-42A

FROM: B. C. Osborne, 704-H

PROJECT S-1588 - IN-TANK PRECIPITATION, SAFETY AND ENVIRONMENT ENHANCEMENT

Attached is the NEPA Safety Analysis and permits checklist for the Subject Project. Please forward any questions to the writer at Bldg. 704-H or extension 7-8316.

BCO/jd

D3682

CC: G. M. Johnson, 703-H
N. B. Davis, 703-H
J. M. Griffin, 703-H
M. Hawkins, 703-A
O. M. Morris, 703-H
T. H. Killian, 703-H

USR 2.4-347 (Rev 1-88)

ENVIRONMENTAL EVALUATION CHECKLIST*

NEPA, WASTE MANAGEMENT, SAFETY ANALYSIS (SRL) AND PERMITS (E&E DEPT.)

ACTIVITY TITLE			DATE
Project S-1588 In-Tank Precipitation, Safety & Environment Enhancement			10/25/88
CHECKLIST PREPARER (NAME, ORGANIZATION AND ADDRESS)	PHONE NO.	APPROVED BY (AREA SUPT OR CHIEF SUPV.)	ACTIVITY NO.
B. C. Osborne - 704-H	7-8316		S- 1588
LOCATION OF ACTIVITY	CUSTODIAN		TA-
241-H	Waste Management		OTHER

ACTIVITY DESCRIPTION: INCLUDE PURPOSE, NEED, LOCATION (PROVIDE MAP OR FIGURE IF APPLICABLE), SCHEDULE, COST, ETC. (USE ADDITIONAL SHEETS IF NECESSARY) ATTACH COPY OF BASIC DATA, DRAFT TA OR OTHER INFORMATION.

This activity will address new safety and environmental concerns in the In-Tank Precipitation Facility (ITP) by:

- Providing nitrogen purging of Tanks 48 and 49.
- Providing a nitrogen blanket of the sodium titanate and sodium tetraphenylborate storage tanks in the cold feeds area and the filtrate collection tanks in the filter building.
- Providing a liquid nitrogen storage area and transfer system.
- Providing a benzene stripping facility using nitrogen gas which will strip benzene from filtrate eliminating deflagration hazards and meeting feed specification requirements for decontaminated salt solution.
- Providing slurry pumps in Tank 50 to suspend solids from the Effluent Treatment Facility influent.
- Upgrading certain instrument and electrical equipment in the filter building to Class I Division I or II Group D service (benzene vapors).
- Providing ventilation in the filtrate collection area.
- Providing a source of water for fire fighting purposes in the cold feeds area, Filter Building, Crane Control Room, ECR, & ICR. Also 241-82-H Control Room.

INSTRUCTIONS

1. If the activity results in all NO's being checked or is a direct replacement which will have equal or less impacts (indicate this in the project description and sign this statement on back of this form), attach completed checklist to project approval papers or draft TA and send copies of checklist to:

SRP NEPA COORDINATOR	J. S. MURDOCK	Rm. 212, 773-42A	X5-5198
ENVIRONMENT & ENERGY DEPT.	PERMITS GROUP	Rm. 108N, 703-A	X5-1818
WASTE MANAGEMENT	WM TECHNOLOGY	Rm. 134, 703-H	X7-8382
SRL-SAFETY ANALYSIS	SAFETY ANALYSIS CHECKLIST CLERK	Rm. 233, 773-42A Mail Stop	X5-5236

2. If a YES is checked, see paragraph on the back of this checklist, then send copies of the completed checklist and supplemental information to the coordinators listed in (1) above.

* CHECKLIST PROCEDURE: SRP Procedures Manual, Item 204 SRL Procedures Manual, DPST 4.39

ENVIRONMENTAL EVALUATION CHECKLIST

NEPA, WASTE MANAGEMENT, SAFETY ANALYSIS (SRL) AND PERMITS (E&E DEPT.)

ENVIRONMENTAL (NEPA AND PERMIT) EVALUATION

	NO	YES	
Will the proposed activity result in a change in the quantity or makeup of:			
– Air emissions? (except uncontaminated ventilation air?) Benezene, nitrogen		X	
– Liquid Releases to streams, seepage basins, storm drains, process sewers, wetlands, groundwater, ponds, lakes? Steam condensate	___	___	N
– Chemicals or petroleum products stored? Liquid nitrogen	___	X	N
– Groundwater or river water utilized?	___	X	N
– Radioactive/chemical liquid or solid wastes generated or stored? Waste Management must approve disposal/storage of all waste (radioactive/non-radioactive including lead) to be generated. If checked yes contact Waste Management Technology for approval. Waste Management has been contacted. ___ INITIALS	X	___	N
	X	___	N/WM
– Will the proposed activity or facility use lead or lead components? (If yes, fill out OSR 29-6 for each item and attach.)	___	X	WM
Will the proposed activity impact			
– Wetlands, swamps, streams, river beds, ponds, etc.?	X	___	N
– Endangered species?	X	___	N
– Fish or wildlife resources or habitat?	X	___	N
Does this project require site clearing, work in streams, filling or draining wetlands/floodplains, borrow pits, etc.?	X	___	N
Does this action require an erosion/sedimentation control plan?	X	___	N
Will the proposed activity increase the potential for liquid spills?	___	X	N
Will the proposed activity require a site use permit (SR Form 88)?	___	X	E&E
Will the proposed activity install or modify			
– An off-gas treatment system?	___	X	E&E
– A sanitary sewer system?	X	___	E&E
– A domestic water system?	___	X	E&E
– A chemical waste treatment system?	X	___	E&E
– A process sewer system?	X	___	E&E
– A pump station(s) to transfer waste?	___	X	E&E
– A monitoring well?	X	___	E&E
– A domestic or process water well?	X	___	E&E

SAFETY ANALYSIS (This section not required for Test Authorizations)

Will the proposed activity alter any section of the Safety Analysis Report?	___	X	S
Will the proposed activity involve			
– Radioactive Material?	___	X	S
– Hazardous/Toxic Material?	___	X	S
– Fire or explosion hazards?	___	X	S
– Co-occupancy by Operations and Construction during project work?	___	X	S

If any item is checked "YES" contact the appropriate group as marked (N-NEPA, WM-Waste Management, E&E-Environment and Energy or S-SRL, Safety Analysis) to discuss providing additional supplemental information for the required documentation/applications.

If the activity is a direct replacement or will result in equivalent or beneficial environmental or safety impact, please sign and date here.

Name _____ Date _____

Back of OSR 14-347

7-F

OSR 3-4[illegible]-W (Rev 1-89)

WESTINGHOUSE SAVANNAH RIVER COMPANY

INTER-OFFICE MEMORANDUM

April 2, 1989

TO: M. E. JOHNSON, WMP, 703-H

FROM: J. S. MURDOCK, NEPA, 773-42A JSM

NEPA ENVIRONMENTAL EVALUATION
FIRE SUPPRESSION SYSTEM, IN-TANK PRECIPITATION, 241-H
PROJECT S-1588 (PARTIAL)

An Environmental Evaluation Checklist (NEPA, Waste Management, Safety Analysis and Permits) was received for this project to provide a fire water preaction type sprinkler system at locations in 241-H to address the fire hazards associated with benzene stripping and in-tank processing. It will also supply water to a sprinkler system at the F/H Effluent Treatment Facility. An underground fire water distribution header, storage vessel, diesel and electric pumps, along with the fire suppression systems will be installed.

A review by the NEPA and Permits Groups of the Environmental Protection Section of the Environmental and Health Protection Department determined that this fire suppression system will not result in any significant adverse environmental impact. In the context of NEPA, this project is not considered a major Federal action significantly affecting the quality of the human environment. This portion of Project S-1588 qualifies as a categorical exclusion under DOE Section D Guidelines (general plant project). Therefore, a supplement to the Memorandum-To-File for In-Tank Precipitation will not be required.

Permits or written approval from the Environmental Protection Section will be required for any domestic water tie-ins.

References:

- Fire Suppression System Basic Data, DPSP-88-2270, Rev. 1, January 27, 1989
- Memorandum-To-File, In-Tank Precipitation, Tank 48-H, SRP, June 15, 1984
- Supplement to an Approved Memorandum-To-File, In-Tank Precipitation, Tank 48-H, SRP, April 18, 1985

JSM:gjc

CC: T. V. Crawford, SRL, 773-A
S. S. Cathey, SRP, 703-H
B. E. Long, 260-4H
G. M. Johnson, 703-H
B. C. Osborne, 704-H
W. C. Reinig, 703-A
J. S. Roberts, 703-A
D. E. Gordon, 703-52A
M. Hawkins, 703-A
NEPA Group, 773-42A
NEPA File, 773-42A
Central Files, 703-A, A-027

OSR 3-4A-W (Rev1-89)

WESTINGHOUSE SAVANNAH RIVER COMPANY

INTER-OFFICE MEMORANDUM

April 2, 1989

TO: J. S. ROBERTS, 703-A

FROM: D. E. GORDON, 703-52A DEG JSM

ENVIRONMENTAL FACTORS NOT APPLICABLE
ITP FIRE SUPPRESSION SYSTEM, 241-H
PROJECT S-1588 (PARTIAL)

Three environmental factors on the Environmental Evaluation Checklist for this Fire Suppression System were checked YES. Use of the system (testing or emergency) will result in use of groundwater and release of water to the environment. In addition, there will be storage of diesel fuel for the diesel pumps. The water use is not considered significant and the diesel fuel storage will be properly contained.

Therefore, these factors are not considered applicable and an Environmental Evaluation Impact Analysis (EEIA) will not be prepared.

DEG:JSM:gjc

1000 Fire Prot

Westinghouse
Savannah River Company

P.O. Box 616
Aiken, SC 29802

WMP-89-2416

April 11, 1989

Mr. G. M. Rygg
United Engineers & Constructors
Stearns Catalytic Division
30 South 17th Street
Philadelphia, PA 19101

Attention: R. Reusch

Reference:

1. Memo April 2, 1989, J. S. Murdock to M. E. Johnson, "NEPA Environmental Evaluation: Fire Suppression System, In-Tank Precipitation, 241-H, Project S-1588".

2. Memo April 2, 1989, D. E. Gordon to J. S. Roberts, "Environmental Factors Not Applicable: ITP Fire Suppression System, 241-H, Project S-1588 (Partial)"

ITP FIRE SUPPRESSION SYSTEM - NEPA ENVIRONMENTAL EVALUATION

An Environmental Evaluation checklist (attached) has been submitted for the subject project to the Savannah River Site Environmental Protection Section of the Environmental and Health Protection Department (E&HP). Based upon a review of this checklist, the E&HP Department has advised that this fire suppression system will not result in any significant adverse environmental impacts. Additionally, this fire suppression system is not considered a major Federal action significantly affecting the quality of the human environment and qualifies as a categorical exclusion to NEPA under DOE Section D Guidelines (Ref. 1 and 2).

Permit or written approval from the Environmental Protection Section will be required prior to any domestic water tie-ins for this project.

Please use this information for development of project schedule. If you have any questions, contact myself at 803-557-8620 or M. E. Johnson at extension 803-557-8175.

Very truly yours,

G. M. Johnson, Area Superintendent
Waste Management Projects

GMJ/lj
L3835

CC: G. L. Hohmann, CDC Bldg.
R. E. Walker, BTC-416/CDC Bldg.
J. N. Beatty, 703-H
B. C. Osborne, 704-H
M. E. Johnson, 703-H
N. R. Davis, 703-H

OBA 14-347 (Rev 1-88)

ENVIRONMENTAL EVALUATION CHECKLIST*

NEPA, WASTE MANAGEMENT, SAFETY ANALYSIS (SRL) AND PERMITS (E&E DEPT.)

ACTIVITY TITLE: PROJECT S-1588, ITP ENVIRONMENTAL AND SAFETY ENHANCEMENT			DATE: 3/6/89
CHECKLIST PREPARER (NAME, ORGANIZATION AND ADDRESS): M. E. JOHNSON, WMP-703-H	PHONE NO.: 7-8175	APPROVED BY (AREA SUPT OR CHIEF SUPV.):	ACTIVITY NO.: S-1588
LOCATION OF ACTIVITY: 200-H AREA	CUSTODIAN: S. S. CATHEY		TA-
			OTHER CCO NO. 1

ACTIVITY DESCRIPTION: INCLUDE PURPOSE, NEED, LOCATION (PROVIDE MAP OR FIGURE IF APPLICABLE), SCHEDULE, COST, ETC. (USE ADDITIONAL SHEETS IF NECESSARY) ATTACH COPY OF BASIC DATA, DRAFT TA OR OTHER INFORMATION.

An underground fire water distribution header, storage vessel, diesel and electric pumps, along with fire suppression systems are to be installed to service ITP and ETF facilities. The attached basic data provides details of the proposed project.

The water storage vessel and underground fire water distribution systems servicing ETF areas are part of project S2872. This basic data report includes references to the fire water storage tank and distribution systems servicing ETF areas for information purposes only. Project S-1588 provides diesel and electric pumps, connections to the underground fire water header at ETF areas, underground fire water header servicing ITP facilities, and fire suppression systems for ITP facilities.

INSTRUCTIONS

1. If the activity results in all NO's being checked or is a direct replacement which will have equal or less impacts (indicate this in the project description and sign the statement on back of this form), attach completed checklist to project approval papers or draft TA and send copies of checklist to:

SRP NEPA COORDINATOR	J. S. MURDOCK	Rm. 212, 773-42A	X5-6186
ENVIRONMENT & ENERGY DEPT.	PERMITS GROUP	Rm. 1089, 703-A	X5-1816
WASTE MANAGEMENT	WM TECHNOLOGY	Rm. 134, 703-H	X7-6982
SRL-SAFETY ANALYSIS	SAFETY ANALYSIS CHECKLIST CLERK	Rm. 288, 773-42A Mail Stop	X5-6256

WMP FILE S-1588, B.S. 703-H

2. If a YES is checked, see paragraph on the back of this checklist, then send copies of the completed checklist and supplemental information to the coordinators listed (1) above.

* CHECKLIST PROCEDURE: SRP Procedures Manual, Item 204 SRL Procedures Manual, OP-IT 4.38

ENVIRONMENTAL EVALUATION CHECKLIST

NEPA, WASTE MANAGEMENT, SAFETY ANALYSIS (SRL) AND PERMITS (E&E DEPT.)

ENVIRONMENTAL (NEPA AND PERMIT) EVALUATION	NO	YES	
Will the proposed activity result in a change in the quantity or makeup of:			
– Air emissions? (except uncontaminated ventilation air?)	X		N
– Liquid Releases to streams, seepage basins, storm drains, process sewers, wetlands, groundwater, ponds, lakes?		X	N
– Chemicals or petroleum products stored?		X	N
– Groundwater or river water utilized?		X	N
– Radioactive/chemical liquid or solid wastes generated or stored? Waste Management must approve disposal/storage of all waste (radioactive/non-radioactive including lead) to be generated. If checked yes contact Waste Management Technology for approval. Waste Management has been contacted. _____ INITIALS	X		N/WM
– Will the proposed activity or facility use lead or lead components? (If yes, fill out OSR 29-6 for each item and attach.)	X		WM
Will the proposed activity impact			
– Wetlands, swamps, streams, river beds, ponds, etc.?	X		N
– Endangered species?	X		N
– Fish or wildlife resources or habitat?	X		N
Does this project require site clearing, work in streams, filling or draining wetlands/floodplains, borrow pits, etc.?	X		N
Does this action require an erosion/sedimentation control plan?	X		N
Will the proposed activity increase the potential for liquid spills?	X		N
Will the proposed activity require a site use permit (SR Form 88)?	X		E&E
Will the proposed activity install or modify			
– An off-gas treatment system?	X		E&E
– A sanitary sewer system?	X		E&E
– A domestic water system?		X	E&E
– A chemical waste treatment system?	X		E&E
– A process sewer system?	X		E&E
– A pump station(s) to transfer waste?	X		E&E
– A monitoring well?	X		E&E
– A domestic or process water well?		X	E&E

SAFETY ANALYSIS (This section not required for Test Authorizations)			
Will the proposed activity alter any section of the Safety Analysis Report?		X	S
Will the proposed activity involve			
– Radioactive Material?	X		S
– Hazardous/Toxic Material?	X		S
– Fire or explosion hazards?	X		S
– Co-occupancy by Operations and Construction during project work?		X	S

If any item is checked "YES" contact the appropriate group as marked (N-NEPA, WM-Waste Management, E&E-Environment and Energy or S-SRL, Safety Analysis) to discuss providing additional supplemental information for the required documentation/applications.

If the activity is a direct replacement or will result in equivalent or beneficial environmental or safety impact, please sign and date here.

Name M. E. JOHNSON M. E. Johnson Date 3/6/89

DOE F 1325.8
(8-89)

7-G

United States Government

Department of Energy

memorandum

DATE: October 12, 1990

REPLY TO ATTN OF: EH-25

SUBJECT: National Environmental Policy Act (NEPA) Determination for the Defense Waste Processing Facility (DWPF) at the Savannah River Site

TO:

Leo P. Duffy
Director
Office of Environmental Restoration
and Waste Management

This is in response to your request for a determination on the need for a supplement to the 1982 environmental impact statement (EIS)(DOE/EIS-0082) as a result of modifications made to the DWPF, per your memorandum of July 25, 1990. The Office of NEPA Oversight has reviewed your attachment, "Analysis of the Environmental Impacts Resulting from Modifications in the Defense Waste Processing Facility," which was prepared in accordance with Section C.2 of the DOE NEPA guidelines to document the overall environmental effects of the facility modifications. We have considered your recommendation that a supplement to the 1982 EIS is not required.

Subsequent to the record of decision and issuance in July 1982 of the waste form selection environmental assessment, a series of modifications to the DWPF have been addressed in memoranda-to-file; impacts associated with the changes have been determined individually to be clearly insignificant. Modifications to the DWPF since 1982 include replacing the ion-exchange processing of the waste tank supernatant with an in-tank precipitation process to decontaminate the waste supernatant; a precipitate hydrolysis process in the S-Area; expansion of Saltstone Facility operations, transfer of S-Area radioactive liquid waste to H-Area for treatment at the effluent treatment facility (ETF); and disposal of ETF salt wastes at Z-Area.

The in-tank precipitation process would improve efficiency by removing more than 99.9% of the radioactivity in the supernatant in the form of precipitated cesium, strontium and plutonium. Impacts and risks associated with the ion-exchange process would be eliminated. New impacts would be introduced as a result of the use of the precipitating agent sodium tetraphenylborate (STPB). Benzene and benzene derivatives would be formed during the destruction and radiolytic decomposition of STPB. Large quantities of benzene and its derivatives would be produced in S-Area, stored in the organic waste storage tank (OWST), and destroyed at the proposed Consolidated Incineration Facility.

Routine emissions of benzene from S-Area, the F&H Tank Farms, and Z-Area, and of mercury from S-Area would occur, but would not exceed any air discharge permits or Occupational Safety and Health Administration permissible exposure levels. Based on conservative assumptions, the resulting lifetime excess cancer risk from routine benzene releases would be 8.7×10^{-5} for an offsite individual. Although a catastrophic release of benzene due to rupture of the double-shell OWST could result in severe consequences to workers in the immediate area of the OWST, and to Upper Three Runs Creek and the Savannah River, the tank has been designed such that this event is highly unlikely.

The process for incorporating the insoluble tank sludge and precipitated radionuclides into borosilicate glass would not change. However, the modified DWPF design would differ from the original design as follows: Initial interim storage capacity for the high-level stainless steel canisters would be approximately doubled, but fewer canisters would be produced per year; the maximum activity and heat generation of a canister would increase, but the radiation from a filled canister would decrease.

Decontaminated salt processing modifications include substantial formulation changes. A 28% salt solution would be processed at a faster rate with flyash, slag, and lime to produce saltstone, as compared to the original 35% salt solution process with cement to produce saltcrete. The land requirements for the Z-Area Saltstone Facility have increased to 161 acres from the original 35 acres stated in the 1982 EIS; impacts to wildlife, endangered species, archeological sites and wetlands were not significant. The radioactivity of the saltstone would decrease substantially. Long term environmental risks due to potential for radiological and nonradiological groundwater contamination would be reduced due to improved permeability and leachability characteristics of the saltstone, and the placement in reinforced concrete disposal vaults, not the original earthen trenches.

Other modifications would increase combustible and noncombustible low-level radioactive solid wastes, but quantities would remain small compared to those routinely generated at the Savannah River Site. No adverse impacts have been identified for changes in liquid waste discharges to streams.

Overall, the risks from routine radionuclide emissions from DWPF are reduced. Although routine tritium releases would increase, the combined fission product, uranium, and transuranic emissions would be reduced. The maximum individual and cumulative population dose from all DWPF routine releases would be reduced. The fatal cancer risk to the maximally exposed off-site individual from radiation release due to potential accidents would remain very low.

Based upon my staff's review and analysis and recommendations, and after consultation with the Office of General Counsel, I have determined that the preparation of a supplement to the EIS is not required. This determination is made with respect to the criteria in 40 CFR section 1502.9 of the Council on Environmental Quality Regulations for Implementing the Procedural Provisions of NEPA. That is, there are no substantial changes in the proposed action that are relevant to environmental concerns, and there are no significant new circumstances or information relevant to environmental concerns and bearing on the proposed action or its impacts. While the original proposed action has been modified, the changes do not, either individually or cumulatively, result in impacts that are significantly different from those evaluated fully in the environmental impact statement.

In accordance with SEN-15-90 procedures, please make the environmental analysis available to the public for information purposes.

Paul L. Ziemer

Paul L. Ziemer, Ph.D.
Assistant Secretary
Environment, Safety and Health

cc: R. Scott, EM-20
NEPA Compliance Officer

B. Gould, SR
NEPA Compliance Officer

ATTACHMENT #8

SCDHEC Air Quality Control Permit (Diesel Generator)

- Memo 8-A: Guidry to Hayman, 5/29/86 "Air Quality Control Construction Permit" (Diesel Generator)

To: Tim Gaughan, 8-A
241-120H

E. I. DU PONT DE NEMOURS & COMPANY
INCORPORATED
ATOMIC ENERGY DIVISION
SAVANNAH RIVER PLANT
AIKEN, SOUTH CAROLINA 29808-0001
(TWX: 810-771-2670, TEL: 803-725-6211, WU: AUGUSTA, GA.)

May 29, 1986

R. D. HAYMAN, PROJECT ENGINEER
ENGINEERING DEPARTMENT
WILMINGTON L43N25

AIR QUALITY CONTROL CONSTRUCTION PERMIT

SCDHEC has issued the attached Air Quality Control Construction Permit for the 150 KW emergency diesel generator at Building 241-96H (In-Tank Precipitation).

Obtaining this permit no longer prevents starting construction.

Please note Conditions 2 and 3 and the Additional Conditions (IIC) on the permit. At start of construction and at least three weeks prior to initially operating this emergency diesel generator, you must contact me at X5-1086 so I can notify SCDHEC and schedule an operating inspection to obtain the Air Quality Control Operating Permit. Also, you must maintain an operating log for this generator.

R M Guidry

R. M. GUIDRY, PROCESS CHEMIST
ENVIRONMENT & ENERGY DEPARTMENT

RMG:gg
Att

CC: J. H. Travis, CONST, CAB
A. B. Edenfield, SRP, 777-10A
J. R. Floyd, Jr., 777-10A
M. B. Hughes, 703-A
S. W. Hixson, 703-A
M. Hawkins, 703-A
Central Files, 703-A, A-027

A018061

South Carolina Department of Health and Environmental Control

2600 Bull Street
Columbia, S.C. 29201

Commissioner
Robert S. Jackson, M.D.

Board
Moses H. Clarkson, Jr., Chairman
Gerald A. Kaynard, Vice-Chairman
Oren L. Brady, Jr., Secretary
Barbara P. Nuessle
James A. Spruill, Jr.
William H. Hester, M.D.
Euta M. Colvin, M.D.

March 31, 1986

860650

Department of Energy, Savannah River Operations
P.O. Box A
Aiken, South Carolina 29802

Attention: Mr. C. G. Halsted

Dear Mr. Halsted:

Your permit application has been reviewed by our engineering staff. It is our opinion that the proposed unit can, with proper operation and maintenance, comply with South Carolina Air Quality Control Regulations and Standards.

In addition to this permit to construct, a permit to operate is required in accordance with the Air Pollution Control Regulations and Standards for the State of South Carolina. The regulations require notification to this agency no later than 15 days prior to placing the new, increased or altered source in operation.

Enclosed is Construction Permit No. 0080-0046-CE. Please note the conditions on the permit.

If you have any comments concerning this permit, contact this agency within 15 days.

Very truly yours,

William W. Culler

William W. Culler, P.E., Director
Engineering Services Division
Bureau of Air Quality Control

WWC:BWB:bg
Enclosure
cc: Mr. Tim Faugl, Lower Savannah District

South Carolina Department of Health and Environmental Control

2600 Bull Street
Columbia, S.C. 29201

Commissioner
Robert S. Jackson, M.D.

Board
Moses H. Clarkson, Jr., Chairman
Gerald A. Kaynard, Vice-Chairman
Oren L. Brady, Jr., Secretary
Barbara P. Nuessle
James A. Spruill, Jr.
William H. Hester, M.D.
Euta M. Colvin, M.D.

OFFICE OF ENVIRONMENTAL CONTROL
BUREAU OF AIR QUALITY CONTROL
CONSTRUCTION PERMIT

Department of Energy, Savannah River Operations
P.O. Box A
Aiken, South Carolina 29802

Permission is hereby granted to construct a 150 KW emergency power diesel generator.

NOTWITHSTANDING ANY OF THE CONDITIONS LISTED BELOW, NO APPLICABLE LAW, REGULATION, OR STANDARD MAY BE VIOLATED.

CONDITIONS

1. All official correspondence, plans, permit application forms and written statements are an integral part of this permit.
2. THE DIRECTOR OF THE ENGINEERING SERVICES DIVISION MUST BE NOTIFIED IN WRITING UPON THE BEGINNING OF CONSTRUCTION AND THE STARTUP OF EACH PERMITTED FACILITY.
3. This construction permit shall expire one year from date issued, unless construction has begun and this agency has been notified.
4. An expired construction permit may be reactivated only upon the written request of the permittee, subject to all laws, regulations, and standards applicable at the time of the reactivation.

(SEE PAGE 2 OF THIS PERMIT FOR ADDITIONAL CONDITIONS)

This is pursuant to the provisions of Section 48-1-110, 1976 Codes of South Carolina, as amended, and the South Carolina Air Quality Control Regulation 62.1, Section II.

CONSTRUCTION PERMIT NUMBER: 0080-0046-CE
PLANT LOCATION: H-Area
DATE OF ISSUE: March 31, 1986
DATE OF COMPLETION: July, 1987

William W. Culler, P.E., Director
Engineering Services Division
Bureau of Air Quality Control

DC
LASX

I. Standard Conditions

A. This permit expressly incorporates all the provisions of South Carolina Department of Health and Environmental Control Regulation 61-62.1, Section II, Paragraph D.

II. Special Conditions

A. Emissions Limitations

Air pollutant emissions shall not exceed the following:

ID Number	Pollutant	Emission Limitation
CE	Opacity	20% (Method 9)

The above emission limitations are based on operation at rated capacity. Operation at other than rated capacity must meet the emission limits specified in the applicable regulations based on that operating rate. The actual pollutant emissions are less than or equal to emission limitations indicated above. If the Department determines at a later date that the actual emissions have increased to a degree that PSD might apply, then resubmittal of applications and additional controls might be required.

B. Continuous Monitoring Requirements
N/A

C. Additional Conditions
This source is permitted to operate a maximum of 1000 hours/year. Records of such operation shall be kept and be made available to B/ personnel upon request.

"INFORMATION ONLY"

ASR 2-98 (11/80)

FS 34.4C

"Q" ☐ "S" ☑

Distribution:

Project Records Center - Constr

Division Engineer

T & I

Pipe

FILE ID #12800

Savannah River Plant
PRESSURE TEST REPORT

W761584
W761585
W761586
W761587
W761588

Project 1780 AMO 8-1047 N/A Area H Bldg. No. 241 Dwg. W778343

Test Location: Shop N/A Field ✓ Service INTER AREA PIPELINE (PROCESS) (JACKET)

Fabrication: Pipe ✓ Tank N/A Equipment N/A Size 1" - 6" - 10" Material C/S

Type Test: Hydro ✓ Pneumatic N/A Halide N/A Vacuum N/A

Test Medium: Water ✓ Oil N/A Air N/A Freon & Nitrogen N/A Vacuum N/A

Location: From (A24) INSIDE AUX PUMP PIT ON EAST WALL W761588 To (J4) & (J6) WALL OF NOZZLE BOX ON SOUTH WALL OF HOBB W778343

Line No. RC-39, RC-36,

(J20) LEAK DETECTION BOX Y515-300-050-00-T W778343

Actual Test Pressure: 130 PSIG Vacuum N/A Actual Length of Test 30 min.

Special Instructions: Ref. Safety Procedure No. 52 - T&I S.I. T&I 5

(Protection: Safety, Blank Offs, Etc.)

Acceptance Criteria: Test Pressure 125 PSIG Time (Minimum 15 min. or as req.) Vacuum N/A

Per Spec. N/A P-Code N/A Dwg. N/A Teletype No. PD 785 Local Design N/A

Remarks TEST OK TESTED AS PER ATTACHED PAPERS

Gauge CDS No. 187A Expires 2-88

Test Requested by K. J. BLANKENSHIP (Div. Eng.) per E. J. BRAUN (Area Eng.)

	Name	Title
Test Accepted by: Testing & Inspection	C. [illegible]	QC
Craft Foreman	[illegible]	[illegible]
Operations*	[illegible]	[illegible]

Date 10-14-87

* Optional

INFORMATION ONLY

130/67

RECEIVED MAR 20 1989

ASR 2-98 (11/80)

34HC

"O" ☐ "S" ☑
Distribution:
Project Records Center - Constr
Division Engineer
T & I
Pipe

FILE ID #12800

Savannah River Plant
PRESSURE TEST REPORT

W761584
W761585
W761586
W761587
W761588

Project 1780 AMO 8-1047 N/A Area — Bldg. No. 241 Dwg. W775343

Test Location: Shop N/A Field ✓ Service INTER AREA PIPELINE (PROCESS) (CORE)

Fabrication: Pipe ✓ Tank N/A Equipment N/A Size 3/4" - 3" Material S/S

Type Test: Hydro ✓ Pneumatic N/A Halide N/A Vacuum N/A

Test Medium: Water ✓ Oil N/A Air N/A Freon & Nitrogen N/A Vacuum N/A

Location: From (P24) INSIDE AUX. PUMP PIT ON EAST WALL W761588 To (A24) INSIDE HOBS ON SOUTH WALL NOZZLE BOX NOZZLE # 748 W775343 (3122-YS18)

Line No. RCZ9, RCZ36, FLW155, FLW156 (A36) 3/4" STUB UP TO FLW. LINES INSIDE HOBS W775343 (3122-YS18)

Actual Test Pressure: 375 PSIG Vacuum N/A Actual Length of Test 30 min.

Special Instructions: Ref. Safety Procedure No. 52 - T&I S.I. T&I 5

(Protection: Safety, Blank Offs, Etc.)

Acceptance Criteria: Test Pressure 375 PSIG Time (Minimum 15 min. or as req.) Vacuum N/A

Per Spec. 4482 P-Code 224A Dwg. N/A Teletype No. N/A Local Design N/A

Remarks TEST OK

Gauge CDS No. 600 Expires 1-88

Test Requested by K. J. BLANKENSHIP (Div. Eng.) per E. J. BRAUN (Area Eng.)

	Name	Title
Test Accepted by: Testing & Inspection	D. W. Sa[illegible]	T&I
Craft Foreman	[illegible]	PIPE
Operations*	[illegible]	WMP

INFORMATION ONLY

Date 9-25-87

* Optional

RECEIVED NOV 30 1987

mj 11/30/87

LAW.

ASR 2-98 (11/80)

34.11C

"Q" ☐ "S" ☑
Distribution:
Project Records Center - Constr
Division Engineer
T & I
Pipe

FILE ID #12800

Savannah River Plant
PRESSURE TEST REPORT

W761584
W761585
W761586
W761587
W761588

Project 1780 AMO 8-1047 N/A Area H Bldg. No. 241 Dwg. W778343

Test Location: Shop N/A Field ✓ Service INTER AREA PIPELINE (PROCESS) (CORE)

Fabrication: Pipe ✓ Tank N/A Equipment N/A Size 3/4" - 3" Material S/S

Type Test: Hydro N/A Pneumatic ✓ Halide N/A Vacuum N/A

Test Medium: Water N/A Oil N/A Air ✓ Freon & Nitrogen N/A Vacuum N/A

Location: From (A24) INSIDE AUX. PUMP PIT ON EAST WALL W761588 (1780-3550) To (A24) INSIDE HDBS ON SOUTH WALL NOZZLE BOX NOZZLE #748 W778343 (3122-Y518)

Line No. RCZ9, RCZ36, FLW 155, FLW 156 (A3c) 3/4" STUB UPS TO FLW. LINES INSIDE HDBS W778343 (3122-Y518)

Actual Test Pressure: 15 PSIG Vacuum N/A Actual Length of Test 30 min.

Special Instructions: Ref. Safety Procedure No. 52 - T&I S.I. T&I 5

(Protection: Safety, Blank Offs, Etc.)

Acceptance Criteria: Test Pressure 15 PSIG Time (Minimum 15 min. or as req.) Vacuum N/A

Per Spec. N/A P-Code N/A Dwg. N/A Teletype No. KN0003 Local Design N/A

Remarks TEST OK TESTED AS PER ATTACHED PAPERS

Gauge CDS No. 565B Expires 11-87

Test Requested by K. J. BLANKENSHIP (Div. Eng.) per E. J. BRAUN (Area Eng.)

	Name	Title
Test Accepted by: Testing & Inspection	C. Hinman	T&I
Craft Foreman	[illegible]	PIPE
Operations*	[illegible]	[illegible]

Date 9-21-87

* Optional

RECEIVED [illegible] 1989

INFORMATION ONLY

mj 11/30/87

[illegible]

ASR 2-98 (11/80)

F-S-34-11C

"Q" ☐	"S" ☑
Distribution:	
Project Records Center - Const.	
Division Engineer	
T & I	
Pipe	

Savannah River Plant
PRESSURE TEST REPORT

FILE ID #12800

W814819
W743747
W761581
W761582
W761587
W761588
W814832
W814833

Project 1780 AMO 8-1047 N/A Area H Bldg. No. 241 Dwg. W814833

Test Location: Shop N/A Field ✓ Service PROCESS WASE LINE (JACKET)

Fabrication: Pipe ✓ Tank N/A Equipment N/A Size 6"-10" Material C/S

Type Test: Hydro ✓ Pneumatic N/A Halide N/A Vacuum N/A

Test Medium: Water ✓ Oil N/A Air N/A Freon & Nitrogen N/A Vacuum N/A

Location: From (A5) INSIDE EAST WALL OF AUXILIAR PUMP PIT (W761588) (SDP1)(PCP341) To (F2) ONSLOPE EAST OF TANK #49 (1253A) W814819

Line No. SF16054-SDP1-1253A, PCP341 (B5) VALVE BOX Y351-15-1 EAST SIDE OF TANK #51 (SF16054) W743747

Actual Test Pressure: 134 PSIG Vacuum N/A Actual Length of Test 30 min.

Special Instructions: Ref. Safety Procedure No. 52 - T&I S.I. T&I 5

(Protection: Safety, Blank Offs, Etc.)

Acceptance Criteria: Test Pressure 125 PSIG Time (Minimum 15 min. or as req.) Vacuum N/A

Per Spec. N/A P-Code N/A Dwg. N/A Teletype No. PD785 Local Design N/A

Remarks TEST OK TESTED AS PER IDM PD785

Gauge CDS No. 228A Expires 4-88

Test Requested by C. D. SMITH (Div. Eng.) per M. D. CRUMPTON (Area Eng.)

	Name	Title
Test Accepted by: Testing & Inspection	C. Shipper	QC
Craft Foreman	Steve K Meador	PIPE
Operations*	Donna Owens	WMP

Date 11-6-87

* Optional

INFORMATION ONLY

INFORMATION ONLY

RECEIVED MAR 20 1989

ASR 2-98 (11/80)

F-S-34-11C

TEST REPORT #67C

"Q" ☐ "S" ☑
Distribution:
Project Records Center - Constr.
Division Engineer
T & I
Pipe

FILE ID #12800

Savannah River Plant
PRESSURE TEST REPORT

W761581
W761582
W761587
W761588
W814819
W814833

Project 1780 AMO 8-1047 N/A Area H Bldg. No. 241 Dwg. W814833

Test Location: Shop N/A Field ✓ Service PROCESS WASTE LINE (CORE)

Fabrication: Pipe ✓ Tank N/A Equipment N/A Size 3" Material S/S

Type Test: Hydro ✓ Pneumatic N/A Halide N/A Vacuum N/A

Test Medium: Water ✓ Oil N/A Air N/A Freon & Nitrogen N/A Vacuum N/A

Location: From (A5) INSIDE EAST WALL OF AUXILIAR PUMP PIT (PCP341) W761588 To (E2) ON SLOPE EAST OF TANK #49 (1253A) W814819

Line No. PCP341, 1253A

Actual Test Pressure: 382 PSIG Vacuum N/A Actual Length of Test 30 min.

Special Instructions: Ref. Safety Procedure No. 52 - T&I S.I. T&I 5

(Protection: Safety, Blank Offs, Etc.)

Acceptance Criteria: Test Pressure 375 PSIG Time (Minimum 15 min. or as req.) Vacuum N/A

Per Spec. 4482 P-Code 224A Dwg. N/A Teletype No. N/A Local Design N/A

Remarks TEST OK

Gauge CDS No. 252A Expires 1-88

Test Requested by C. D. SMITH (Div. Eng.) per M. D. CRUMPTON (Area Eng.)

	Name	Title
Test Accepted by: Testing & Inspection	C. Skipper	Q.C.
Craft Foreman	Steve R Meador	PIPE
Operations*	Donna Owens	WMP

Date 11-4-87

* Optional

INFORMATION ONLY

INFORMATION ONLY

RECEIVED ... 1989

ASR 2-98 (11/80)

F-S-34-11C

Test Report #67D

"Q" ☐ "S" ☑
Distribution:
Project Records Center - Const.
Division Engineer
T & I
Pipe

FILE ID #12800

Savannah River Plant
PRESSURE TEST REPORT

W761581
W761582
W761587
W761588
W814819
W814833

Project 1780 AMO 8-1047 N/A Area H Bldg. No. 241 Dwg. W814833

Test Location: Shop N/A Field ✓ Service PROCESS WASTE LINE (CORE)

Fabrication: Pipe ✓ Tank N/A Equipment N/A Size 3" Material S/S

Type Test: Hydro N/A Pneumatic ✓ Halide N/A Vacuum N/A

Test Medium: Water N/A Oil N/A Air ✓ Freon & Nitrogen N/A Vacuum N/A

Location: From (A) INSIDE EAST WALL OF AUXILIAR PUMP PIT (PCP341) W761588 To (B) ON SLOPE EAST OF TANK #49 (1253A) W814819

Line No. PCP341, 1253A

Actual Test Pressure: 17 PSIG Vacuum N/A Actual Length of Test AS REQ min

Special Instructions: Ref. Safety Procedure No. 52 - T&I S.I. T&I 5

(Protection: Safety, Blank Offs, Etc.)

Acceptance Criteria: Test Pressure 15 PSIG Time (Minimum 15 min. or as req.) Vacuum N/A

Per Spec. N/A P-Code N/A Dwg. N/A Teletype No. KN0003 12586 Local Design N/A

Remarks TEST OK TESTED AS PER ATTACHED PAPER

Gauge CDS No. 47A Expires 4-88

Test Requested by C. D. SMITH (Div. Eng.) per M. D. CRUMPTON (Area Eng.)

	Name	Title
Test Accepted by: Testing & Inspection	C. [illegible]	QC
Craft Foreman	Steve R[illegible]	PIPE
Operations*	Donna [illegible]	WM

Date 11-4-87

* Optional

INFORMATION ONLY

INFORMATION ONLY

RECEIVED [illegible]

ASR 2-98 (11/80)

F.S. 3.4.11C

Test Report 83R

"Q" ☐	"S" ☑
Distribution:	
Project Records Center - Constr.	
Division Engineer	
T & I	
Pipe	

Savannah River Plant
PRESSURE TEST REPORT

FILE ID #12800

W 743747
W 761581
W 761582
W 761587
W 761588
W 814832
W 814833

Project 1780 AMO 8-1047 N/A Area H Bldg. No. 241 Dwg.

Test Location: Shop N/A Field ✓ Service PROCESS WASTE LINE (CORE)

Fabrication: Pipe ✓ Tank N/A Equipment N/A Size 3" Material S/S

Type Test: Hydro N/A Pneumatic ✓ Halide N/A Vacuum N/A

Test Medium: Water N/A Oil N/A Air ✓ Freon & Nitrogen N/A Vacuum N/A

Location: From (A5) INSIDE EAST WALL OF AUXILIARY PUMP PIT W761588 To (B5) VALVE BOX Y351-15-1 EAST SIDE OF TANK #51 W743747

Line No. SF16054, SDP1

Actual Test Pressure: 17 PSIG Vacuum N/A Actual Length of Test 30 min.

Special Instructions: Ref. Safety Procedure No. 52 - T&I S.I. T&I 5

(Protection: Safety, Blank Offs, Etc.)

Acceptance Criteria: Test Pressure 15 PSIG Time (Minimum 15 min. or as req.) Vacuum N/A

Per Spec. N/A P-Code N/A Dwg. N/A Teletype No. KN0003 12-5-86 Local Design N/A

Remarks TEST OK. TESTED AS PER ATTACHED PAPERS

Gauge CDS No. 47A Expires 4-88

Test Requested by C. D. SMITH (Div. Eng.) per M.D. CRUMPTON (Area Eng.)

	Name	Title
Test Accepted by: Testing & Inspection	C. Skipper	QC.
Craft Foreman	Steve R Meador	PIPE
Operations*	Donna Owens	WMP

Date 11-4-87

* Optional

RECEIVED MAR 20 1989

INFORMATION ONLY

INFORMATION ONLY

ASR 2-98 (11/80)

F-S-34-11C

Test Report 835

"Q" ☐ "S" ☑
Distribution:
Project Records Center - Consti.
Division Engineer
T & I
Pipe

Savannah River Plant
PRESSURE TEST REPORT

FILE ID #12800

W743747
W761581
W761582
W761587
W761588
W814832
W814833

Project 1780 AMO 8-1047 N/A Area H Bldg. No. 241 Dwg.

Test Location: Shop N/A Field ✓ Service PROCESS WASTE LINE (CORE)

Fabrication: Pipe ✓ Tank N/A Equipment N/A Size 3" Material S/S

Type Test: Hydro ✓ Pneumatic N/A Halide N/A Vacuum N/A

Test Medium: Water ✓ Oil N/A Air N/A Freon & Nitrogen N/A Vacuum N/A

Location: From (A5) INSIDE EAST WALL OF AUXILIARY PUMP PIT W761588 To (B5) VALVE BOX Y351-15-1 EAST SIDE OF TANK #51 W743747

Line No. SF16054 ; SDP1

Actual Test Pressure: 382 PSIG Vacuum N/A Actual Length of Test 30 min

Special Instructions: Ref. Safety Procedure No. 52 - T&I S.I. T&I 5

(Protection: Safety, Blank Offs, Etc.)

Acceptance Criteria: Test Pressure 375 PSIG Time (Minimum 15 min. or as req.) Vacuum N/A

Per Spec. 4482 P-Code 224A Dwg. N/A Teletype No. N/A Local Design N/A

Remarks TEST OK

Gauge CDS No. 252 A Expires 1-88

Test Requested by C. D. SMITH (Div. Eng.) per M.D. CRUMPTON (Area Eng.)

	Name	Title
Test Accepted by: Testing & Inspection	C. Skipper	Q.C.
Craft Foreman	Steve R Meador	PIPE
Operations*	Donna Owens	WMP

Date 11-4-87

* Optional

INFORMATION ONLY

INFORMATION ONLY

RECEIVED MAR 20 1989

Test Report No. 100-A

34.08A ES-34 1LC

R 2-98 (11/80)

"Q" ☐	"S" ☑
Distribution:	
Project Records Center - Constr.	
Division Engineer	
T & I	
Pipe	

FILE ID #12800

Savannah River Plant
PRESSURE TEST REPORT

W 750 15C
W 750 25C

Project 1780 AMO 8-1047 N/A Area S Bldg. No. 511 Dwg. W750209

Test Location: Shop N/A Field ✓ Service Leak Detection Bores

Fabrication: Pipe ✓ Tank N/A Equipment N/A Size ½"-1"-1½"-2" Material C/S

Type Test: Hydro ✓ Pneumatic N/A Halide N/A Vacuum N/A

Test Medium: Water ✓ Oil N/A Air N/A Freon & Nitrogen N/A Vacuum N/A

Location: From Test Point ① W750209 To Test Point ② W750209 - W750 15C W750 25C

Line No. SEE below

Actual Test Pressure: 129 PSIG Vacuum N/A Actual Length of Test 30 min.

Special Instructions: Ref. Safety Procedure No. 52 - T&I S.I. T&I 5

(Protection: Safety, Blank Offs, Etc.)

Acceptance Criteria: Test Pressure 125 PSIG Time (Minimum 15 min. or as req.) Vacuum N/A

Per Spec. 4482 P-Code 242 Dwg. N/A Teletype No. DP-0001976 Local Design N/A

Remarks Tested Per Teletype # DP-0001976

No Leakage

Gauge CDS No. 596 Expires 10-86

Test Requested by D. ISMINGER (Div. Eng.) per _____ (Area Eng.)

RECEIVED MAR 20 1989

	Name	Title
Test Accepted by: Testing & Inspection	Brian M. Boston	T&I
Craft Foreman	David M. [illegible]	Pipe Foreman
Operations*		

Date 8-19-86

* Optional

INFORMATION ONLY

LINES LDX 117, 118, 119, 120, 121, 169, 168, 3, 164, 75, 4, 36, 37, 38, 39, 40, 42, 123

LDX 310, 311, 312, 313, 314, 316, 319, 122, 41, 315

PEN 986

Box # LDX 120, 050, 180

Test Report No. 100-H
(FS.34.08B) FS.34.11C

ASR 2-98 (11/80)

"Q" ☐	"S" ☑
Distribution:	
Project Records Center - Constr.	
Division Engineer	
T & I	
Pipe	

FILE ID #12800

Savannah River Plant
PRESSURE TEST REPORT

W750290
W750287
W750289
W750468

Project 1780 AMO 8-1047 N/A Area S Bldg. No. 511 Dwg

Test Location: Shop N/A Field ✓ Service LEAK DETECTION BOXES

Fabrication: Pipe ✓ Tank N/A Equipment N/A Size ½"-1"-1½"-2" Material C/S

Type Test: Hydro ✓ Pneumatic N/A Halide N/A Vacuum N/A

Test Medium: Water ✓ Oil N/A Air N/A Freon & Nitrogen N/A Vacuum N/A

Location: From Test Point (1) W750287 To Test Point (2) W750287 + W750468
W750289 + W750290

Line No. SEE below

Actual Test Pressure: 129 PSIG Vacuum N/A Actual Length of Test 30 min.

Special Instructions: Ref. Safety Procedure No. 52 - T&I S.I. T&I 5

(Protection: Safety, Blank Offs, Etc.)

Acceptance Criteria: Test Pressure 125 PSIG Time (Minimum 15 min. or as req.) Vacuum N/A

Per Spec. 4482 P-Code 242 Dwg. N/A Teletype No. DP-000 1976 Local Design N/A

Remarks Tested PER Teletype # DP-000 1976
NO LEAKAGE

Gauge CDS No. 596 Expires 10/86

Test Requested by D. ISMINGER per
Div. Eng. Area Eng.

RECEIVED MAR 20 1989

	Name	Title
Test Accepted by: Testing & Inspection	[signature]	[signature]
Craft Foreman	[signature]	Pipe Foreman
Operations*		

Date 8-20-86

* Optional

LINES LDX 135, 138, 141, 134, 73, 66, 79, 74, 95, 296, 297, 298, 299, 300, 304, [illegible], 111, 112, 113, 114,
LDX 303, 305, 306, 307, 302, 116, 309, 148, 67, 317, 308, 1[illegible], 147, 65, 142, 143, 144, 145
PEN 1260 LDX 146, 60, 61, 62, 63, 64
Box # LDX 190, 130, 170, 160, 070

INFORMATION ONLY

Test Report No. 100-H
(FS.34.08B) FS.34.11C

ASR 2-98 (11/80)

"Q" ☐ "S" ☑
Distribution:
Project Records Center - Constr.
Division Engineer
T & I
Pipe

FILE ID #12800

Savannah River Plant
PRESSURE TEST REPORT

W750290
W750287
W750289

Project 1780 AMO 8-1047 N/A Area S Bldg. No. 511 Dwg W750468

Test Location: Shop N/A Field ✓ Service Leak Detection Boxes

Fabrication: Pipe ✓ Tank N/A Equipment N/A Size ½"-1"-1½"-2" Material S/S

Type Test: Hydro ✓ Pneumatic N/A Halide N/A Vacuum N/A

Test Medium: Water ✓ Oil N/A Air N/A Freon & Nitrogen N/A Vacuum N/A

Location: From Test Point ① W750287 To Test Point ② W750287 + W750468
W750289 + W750290

Line No. SEE below

Actual Test Pressure: 129 PSIG Vacuum N/A Actual Length of Test 30 min.

Special Instructions: Ref. Safety Procedure No. 52 - T&I S.I. T&I 5
(Protection: Safety, Blank Offs, Etc.)

Acceptance Criteria: Test Pressure 125 PSIG Time (Minimum 15 min. or as req.) Vacuum N/A

Per Spec. 4482 P-Code 242 Dwg. N/A Teletype No. DP-000 1976 Local Design N/A

Remarks Tested Per Teletype # DP-000 1976
No Leakage

Gauge CDS No. 596 Expires 10/86

Test Requested by D. Isminger (Div. Eng.) per _____ (Area Eng.)

RECEIVED MAR 20 1989

	Name	Title
Test Accepted by: Testing & Inspection	[signature]	Tech
Craft Foreman	[signature]	Pipe Foreman
Operations*		

Date 8-20-86
* Optional

INFORMATION ONLY

Lines LDX 135, 138, 141, 134, 73, 66, 79, 74, 95, 296, 297, 298, 299, 300, 304, 110, 111, 112, 113, 114,
LDX 303, 305, 306, 307, 302, 116, 309, 148, 67, 317, 308, 115, 301, 147, 65, 142, 143, 144, 145
Pen 1260 LDX 146, 60, 61, 62, 63, 64
Box # LDX 190, 130, 170, 160, 070

F.S. 34 MC

Distribution
Project Records Center-Constr.

ASR 4-128
Rev. 8/84
File ID #9830

INCREMENT LEAK TESTS
(FIELD PIPING)

PROJECT: 1780 AREA: S-511

DRAWING NOS: W761588, _____, _____, _____

SYSTEM: SLUDGE

TEST DATA

Type of Test			Pipe	Core	Line No.	From	To	CDS No.	Pressure	Time	QC Inspector	Date Acc.
Hydro	Halide	Other										
	✓			✓	RC2 9 RC2 36	1	2	359B 1/87 928 11/86	15 PSIG	30	BmB	11/7/86
Part of This Documentation is in Charter Shipper Files for the line number above.												
	✓			✓	SDP 2	3	4	359B 1/87 928-11-86	15 PSIG	30	EWT	11-21-86
✓				✓	SDP 2	3	4	595 2-87	375 LB.	30	EWT	11-21-86
✓				✓	RC2 37	5	6	595 2-87	375 LB	30	JRL	11-26
	✓			✓	RC2 37	5	12	231-B 4-87	15 PSI	30	EWT	11-24-86
✓				✓	RC2 37 SDP 2	7	3 5	2318 4/87 360B 5/87	16 PSIG	30	BmB	12/4 86
✓				✓	RC2 37 SDP2	7	3 5	595 2/87	378 PSIG	30	BmB	12/7 86
	✓			✓	SDP1	8	9	231-B 4/87 360B 5/87	15 PSIG	30	BmB	12/5 86
✓				✓	SDP1	8	9	595 2/87	380 PSIG	30	BmB	12/5 86
	✓			✓	SDP1 PCP341	10	11	2318 4/87 360B 5/87	15 PSIG	30	BmB	12/16 86
✓				✓	SDP1 PCP341	10	11	595 2/87	375 PSIG	30	BmB	12/16 86
	✓			✓	SDP2 RC237	7	12	2318 4/87 360B 5/87	15 PSIG	30	BmB	12/16 86
✓				✓	SDP2 RC237	7	12	595 2/87	378 PSIG	30	BmB	12/17 87
	✓			✓	SDP1 PCP341	13	10	2318 4/87 360B 5/87	15 PSIG	30	EWT	12/17 86
✓				✓	SDP1 PCP341	13	10	595 2/87	379 PSIG	30	BmB	12/18 86
		NITROGEN		✓	SDP1 PCP341	13	11	231B 4-87	15 PSI	30	EWT	1-5 7

COMMENTS: _____

INFORMATION ONLY

RECEIVED MAR 4 1989

ASR 4-128
Rev. 8/84
File ID #9830

Test Report # 67J
F.S. 3411C

Distribution:
Project Records Center-Constr.

INCREMENT LEAK TESTS
(FIELD PIPING)

PROJECT: 1780 AREA: S

DRAWING NOS: D195546 (AUX)

SYSTEM: PROCESS JACKET P224A EWT 6-19-87

TEST DATA

Type of Test			Pipe	Core	Line No.	From	To	CDS No.	Pressure	Time	QC Inspector	Dat Acc
Hydro	Halide	Other										
	✓		✓		PEN 1213	1	2	948 11/86 3578 1/87	15 #	15 min	[illegible]	10/17/
✓			✓		PEN 1213	1	2	595 2-87	125 PSI	30	JRL	10/20/5

INFORMATION ONLY
INFORMATION ONLY

COMMENTS: RECEIVED [illegible] 89

Test Report 830
FS-34-11C

ASR 4-128
Rev. 8/84
File ID #9830

Distribution:
Project Records Center-Constr.

INCREMENT LEAK TESTS
(FIELD PIPING)

PROJECT: 1780 AREA: S

DRAWING NOS: D195560 (AUX)

SYSTEM: PROCESS JACKET P224

TEST DATA

Type of Test			Pipe	Core	Line No.	From	To	CDS No.	Pressure	Time	QC Inspector	Date Acc
Hydro	Halide	Other										
	✓		✓		DEN 939	1	2	940 1/86 358B 1/87	15#	15 min		10/17
✓			✓		DEN 939	1	2	595 2-87	125 PSI	30	J.R.L.	10/20/

INFORMATION ONLY

COMMENTS:

RECEIVED MAR 2 1999

FS-34.11C

ASR 4-128
Rev. 8/84
File ID #9830

Distribution:
Project Records Center-Constr.

INCREMENT LEAK TESTS
(FIELD PIPING)

PROJECT: 1780 AREA: S

DRAWING NOS: D195552 (AUX.)

SYSTEM: PROCESS JACKET P224 EWT 6-19-87

TEST DATA

Type of Test			Pipe	Core	Line No.	From	To	CDS No.	Pressure	Time	QC Inspector	Date Acc.
Hydro	Halide	Other										
	✓		✓		PEN 917	1	2	948 V/86 2598 1/87	15#	15 min.	[illegible]	10/17/8[illegible]
✓			✓		PEN 917	1	2	595 2-87	125 PSI	30	J.R.L.	10/20/86

INFORMATION ONLY

COMMENTS:

RECEIVED [illegible] 1989

Test Report #83 ✓
F.S 34-11C

ASR 4-128
Rev. 8/84
File ID #9830

Distribution:
Project Records Center-Constr.

INCREMENT LEAK TESTS
(FIELD PIPING)

PROJECT: 1780 AREA: S

DRAWING NOS: D195559 (AWX)

SYSTEM: Process Jacket P224 EWT 6-19-87

TEST DATA

Type of Test			Pipe	Core	Line No.	From	To	CDS No.	Pressure	Time	QC Inspector	Date Acc
Hydro	Halide	Other										
	✓		✓		PEN 938	1	2	94B 11/86 359B 1/87	15#	15 min.	[signature]	10/17/86
✓			✓		PEN 938	1	2	595 2-87	125 psi	30	J.R.L.	10/20/8[illegible]

INFORMATION ONLY

COMMENTS: RECEIVED [illegible] 1989

ASR 4-128
Rev. 8/84
File ID #9830

Test Report #67E

INCREMENT LEAK TESTS
(FIELD PIPING)

34.11C

Distribution:
Project Records Center-Constr.

PROJECT: 1780 (AUX). AREA: S

DRAWING NOS: D195545, P.I W750287,

SYSTEM: PROCESS JACKET P-224A

TEST DATA

Type of Test			Pipe	Core	Line No.	From	To	CDS No.	Pressure	Time	QC Inspector	Date Acc.
Hydro	Halide	Other										
	✓		✓		PEN 1212	1	2	948 11/86 3590 1/87	15 #	15 min	LLS	10/17/8[illegible]
✓			✓		PEN 1212	1	2	595 2-87	125 psi	30 min	JRL	10/20/8[illegible]
		PNEUMATIC ✓		✓	PEN 1212	3	4	989 11-87	15 psi	30 min	JRL	5/22/8[illegible]
✓				✓	PEN 1212	3	4	840 11-87	250 psi	20 min	JRL	5/26/8[illegible]
		PNEUMATIC ✓		✓	PEN 1212	5	4	94-3 11-87	16 psi	30 min	JRL	5-26-[illegible]
✓				✓	PEN 1212	5	4	840 11-87	251 psi	20 min	J.R.L.	5/27/[illegible]

COMMENTS:

INFORMATION ONLY

INFORMATION ONLY

RECEIVED MAR 20 1989

#78X
F.S. 34.11C

ASR 4-128
Rev. 8/84
File ID #9830

Project Records Center-Constr.

INCREMENT LEAK TESTS
(FIELD PIPING)

PROJECT: 1780 AREA: S

DRAWING NOS: D195552 (Aux)

SYSTEM: PROCESS JACKET P2244

TEST DATA

Type of Test					Line No.	From	To	CDS No.	Pressure	Time	QC Inspector	Date Acc.
Hydro	Halide	Other	Pipe	Core								
	✓		✓		PEN 916	1	2	948 11/86 359B 1/87	15 PSI	15 min.		10/17/86
✓			✓		PEN 916	1	2	595 2-87	125 PSI	30		10/20/86

INFORMATION ONLY

INFORMATION ONLY

COMMENTS:

RECORD

ASR 4-128
Rev. 8/84
File ID #9830

Distribution	"S"
Project Records Center-Constr.	

INCREMENT LEAK TESTS
(FIELD PIPING)

PROJECT: 1780 AREA: S-511

DRAWING NOS: W761588, _____, _____, _____

34.11 C

SYSTEM: SLUDGE

TEST DATA

Type of Test			Pipe	Core	Line No.	From	To	CDS No.	Pressure	Time	QC Inspector	Date Acc
Hydro	Halide	Other										
	✓			✓	RC2 9 RC2 36	1	2	359B 1/87 928 11/86	15 PSIG	30	BMB	11/7/86
	Part of This Documentation is in Chester Shipper Files for this line number above											
	✓			✓	SDP 2	3	4	3570 1/87 928-11-86	15 PSIG	30	EWT	11-2 86
✓				✓	SDP 2	3	4	595 2-87	375 LB.	30	EWT	11-21 86
✓				✓	RC2 37	5	6	595 2-87	375 LB	30	AL	11-24 86
	✓			✓	RC2 37	5	12	231-B 4-87	15 PSI	30	EWT	11-24 86
✓				✓	RC2 37 SDP 2	7	3 5	231B 4/87 360A 5/87	16 PSIG	30	BMB	12/4 86
✓				✓	RC2 37 SDP2	7	3 5	595 2/87	378 PSIG	30	BMB	12/ 86
	✓			✓	SDP1	8	9	231-B 4/87 360B 5/87	15 PSIG	30	BMB	12/ 86
✓				✓	SDP1	8	9	595 2/87	380 PSIG	30	BMB	12/5 86
	✓			✓	SDP1 PCP 34B	10	11	231B 4/87 360B 5/87	15 PSIG	30	BMB	12/16 86
✓				✓	SDP1 PCP341	10	11	595 2/87	375 PSIG	30	BMB	12/16 86
	✓			✓	SDP2 RC237	7	12	231B 4/87 360A 5/87	15 PSIG	30	BMB	12/16 86
✓				✓	SDP2 RC237	7	12	595 2/87	378 PSIG	30	BMB	12/ 87
	✓			✓	SDP1 PCP341	13	10	231B 4/87 360B 5/87	15 PSIG	30	EWT	12/ 86
✓				✓	SDP1 PCP341	13	10	595 2/87	379 PSIG	30	BMB	12/ 86
		NITROGEN		✓	SDP1 PCP341	13	10	231B 4/87 360B 5/87	[illegible]	[illegible]	EWT	1-5 87

INFORMATION ONLY

COMMENTS: _____

ASR [illegible]-128
Rev. 8/84
File ID #9830

Distribution:
Project Report & Center-Co

INCREMENT LEAK TESTS
(FIELD PIPING)

PROJECT: 1780 AREA: S-511

DRAWING NOS: W761588, _____, _____, _____

34.11C

SYSTEM: PROCESS

TEST DATA

	Type of Test: Hydro	Halide	Other	Pipe	Core	Line No.	From	To	CDS No.	Pressure	Time	QC Inspector
	✓				✓	SDP1 PCP341	13	11	595 2/87	378 PSIG	30	BmB 1/6 87
	✓			JACKET ✓ 6"-10"		SDP1 PCP341 SDP2 RC237	14	15	522 6/87	132 PSIG	30	BmB 1/12 87
			PNEUMATIC BUBBLE LEAK		✓	PCP4 RC220	16	17	928 7/87	15 PSIG	30	2/5/87 BmB
	✓				✓	PCP4 RC220	16	17	595 2/87	380 PSIG	30	2/5/87 BmB
EE omments	✓			JACKET ✓ 6"-10"		PCP4 RC220	16	17	522 6/87	128 PSIG	30	2/12/87 BmB
*			NITROGEN		✓	SDP 10	18	19	928 7-87	15 PSIG	30	EWT 2-13-87
*			NITROGEN		✓	SDP 11	18	19	928 7-87	15 PSIG	30	EWT 2-13-87
	✓			LDX 3/16/87 Void	✓	SDP10 SDP11	~~18~~	~~19~~	30 7/87	~~240 PSIG~~	~~30~~	2/17/87 BmB
			PNEUMATIC		✓	PCP4 RC220	16	20	895 4/87	150 PSIG	30	2/17/87 BmB
	✓			LDX 3/16/87 Void	✓	PCP4 RC220	~~16~~	~~20~~	30 7/87	~~240 PSIG~~	~~30~~	2/17/87 BmB
*			PNEUMATIC		✓	SDP10 SDP11	19	23	989 4/87	15 PSIG	30	3/11/87 BmB
*	✓				✓	SDP10 SDP11	19	23	595 8/87	378 PSIG	30	3/12/87 BmB
			Bubble Leak PNEUMATIC		✓	PCP4 RCZ20	24	17	989 4/87	15 # PSI	20	3/17/87 JDS
	✓				✓	PCP4 RCZ20	24	17	595 8/87	375 # PSI	30	3/17/87 JDS
*	✓			JACKET 6"-10"		SDP10 SDP11	19	23	595 8/87	150 # PSI	30	3/10/87 JDS
	✓			JACKET 6"-10"		RCZ20 PCP4	24	17	595 8/87	125 # PSI	30	3/20/87 JDS

INFORMATION ONLY

COMMENTS: LDX 132 + 72 tested with PCP4 + RCZ 20 Test Point ~~16~~ to 17 EWT

DWG D195548 + D195554

RECEIVED MAR 20 1989

MK-FERGUSON

F.S.No. 34.11C

HYDRO/PNEUMATIC TEST RECORD

I.R.No. 57-22988-02 PAGE 1 OF 2

Distributions

Project Records Center-Constr.

Test Boundaries (2) D19552 (2) D19555 2

Project No. 1780 Test No. N/A Location AUXILIARY PIT Date of Test 2-29-88

System Name RECYCLE WASTE TO "H" AREA - SPARE

Spool/Mark # of Piping/Vessel D19552 Dwg. # & Rev. 2

Applicable Specification Number 4482 / P-224A

Material to be Tested S/S 3" Test Medium Used WATER

Max. Chloride Allowed 250PPM Results of Most Recent Chloride Test 1.0 ppm Date Performed 5-23-86

Max./Min Test Press. Allowed 375+10 PSIG Act. Test Press. 385 PSIG

Temperature of: Thermometer Number 44-A

Medium 54 °F Material 57 °F Atmospheric 57 °F

Test Gage:

CDS # 251-A Cal. Date 1/88 Re-Cal Due Date 7/88

Req'd Exam. Press. 375+10 PSIG Actual Exam Press. 385 PSIG

Start Time 5:00 Complete Time 5:25

Test Results (Acceptable/Unacceptable)

HYDRO TEST ONLY. / WALK DOWN COMPLETE

INFORMATION ONLY

Remarks: PEN. # 917 Noz. # 7

[illegible] 3-7-88

[illegible] 3-7-88 [illegible] 3/1/88

QC Acceptance Date Reviewed By Date

ASR# 15-64 (9/87)

FILE ID 26033

RECEIVED [illegible] 1989

MK-FERGUSON
A GERRISON COMPANY

FS.No.#34.11C ✓

HYDRO/PNEUMATIC TEST RECORD

"Q" ☐ "S" ☑
Distributions
Project Records Center-Constr

IR No.#57-3788-14 PAGE 1 OF 2

Test Boundaries (1) DA5545 (2) DA5545

Project No. 1780 Test No. N/A Location AUXILIARY PUMP PIT Date of Test 3-7-88

System Name PROCESS / SPARE

Spool/Mark # of Piping/Vessel DA5545 Dwg. # & Rev. 2

Applicable Specification Number 4482/ P-224A

Material to be Tested S/S 3" Test Medium Used WATER

Max. Chloride Allowed 250 PPM Results of Most Recent Chloride Test 1.0 PPM Date Performed 5-23-86

Max./Min Test Press. Allowed 375+10 PSIG Act. Test Press. 385 PSIG

Temperature of: Thermometer Number N/A

Medium 54 °F Material 56 °F Atmospheric 56 °F

Test Gage:

CDS # 751-A Cal. Date 1/88 Re-Cal Due Date 6/88

Req'd Exam. Press. 375+10 PSIG Actual Exam Press. 385 PSIG

Start Time 9:55 Complete Time 10:10

Test Results (Acceptable/Unacceptable)

HYDRO TEST ONLY. / WALK DOWN

INFORMATION ONLY

Remarks: PEN # 1212 NOZ. # 6

[signature] II 57 3-7-88
QC Acceptance Date

[signature] 3/8/88
Reviewed By Date

ASR# 15-64 (9/87)
FILE ID 26033

RECEIVED ... 1989

MK-FERGUSON
A GORRISON KNUDSEN COMPANY

FS No. # 34.11C ✓

HYDRO/PNEUMATIC TEST RECORD

IR No. # 57-3788-12 PAGE 1 OF 2

Distributions
Project Records Center-Constr.

Test Boundaries (1) D195546 (2) D195546

Project No. 1780 Test No. N/A Location AUXILIARY PUMP PIT Date of Test 3-7-88

System Name FROM VALVE BOX

Spool/Mark # of Piping/Vessel D195546 Dwg. # & Rev. 2

Applicable Specification Number 4482 / P-224A

Material to be Tested S/S 3" Test Medium Used AIR

Max. Chloride Allowed N/A Results of Most Recent Chloride Test N/A Date Performed N/A

Max./Min Test Press. Allowed 20 PSI ± 5 PSIG Act. Test Press. 22 PSIG

Temperature of: Thermometer Number N/A

Medium 54 °F Material 56 °F Atmospheric 56 °F

Test Gage:

CDS # 395-A Cal. Date 11-16-87 Re-Cal Due Date 5/88

Req'd Exam. Press. 20 ± 5 PSIG Actual Exam Press. 22 PSIG

Start Time 7:15 Complete Time 8:06

Test Results (Acceptable/Unacceptable)
PNEUMATIC TEST ONLY. / WALK DOWN COMPLETE

Remarks: PEN. # 1213 Noz. # 5

INFORMATION ONLY

[signature] II 57 3-7-88 [signature] 3/8/88
QC Acceptance Date Reviewed By Date

ASR# 15-64 (9/87)
FILE ID 26033

RECEIVED [illegible] 1989

MK-FERGUSON
A MORRISON KNUDSEN COMPANY

F.S.No.# 34.11C

HYDRO/PNEUMATIC TEST RECORD

I.R.No.# 57-22988-01 PAGE 1 OF 2

Distributions
Project Records Center-Car

Test Boundaries (1) D195551 (2) D195551

Project No. 1780 Test No. N/A Location AUXILIARY PIT Date of Test 2-29-88

System Name SLUDGE FROM 40 VALVE BOX

Spool/Mark # of Piping/Vessel D195551 Dwg. # & Rev. 2

Applicable Specification Number 4482 / P-224A

Material to be Tested S/S 3" Test Medium Used WATER

Max. Chloride Allowed 250PPM Results of Most Recent Chloride Test 1.0 ppm Date Performed 5-23-86

Max./Min Test Press. Allowed 375+10 PSIG Act. Test Press. 385 PSIG

Temperature of: Thermometer Number 44-A

Medium 54 °F Material 57 °F Atmospheric 57 °F

Test Gage:

CDS # 251-A Cal. Date 1/88 Re-Cal Due Date 7/88

Req'd Exam. Press. 375+10 PSIG Actual Exam Press. 385 PSIG

Start Time 5:00 Complete Time 5:25

Test Results (Acceptable/Unacceptable)

HYDRO TEST ONLY. / WALK DOWN COMPLETE

Remarks: PEN. #916 Noz. #5

INFORMATION ONLY

[signature] II 57-3-7-88

[signature] II 57 2-29-88 [signature] 3/1/

QC Acceptance Date Reviewed By Date

ASR# 15-64 (9/87)
FILE ID 26033

RECEIVED MAR 20 1989

MK-FERGUSON
A MORRISON KNUDSEN COMPANY

FS No# 34.11C ✓

HYDRO/PNEUMATIC TEST RECORD

I.R. No# 57-3788-11 PAGE 1 OF 2

Distribution: Project Records Center-Constr.

Test Boundaries (1) D195545 (2) D195545

Project No. 1780 Test No. N/A Location AUXILIARY PUMP PIT Date of Test 3-7-88

System Name PROCESS / SPARE

Spool/Mark # of Piping/Vessel D195545 Dwg. # & Rev. 2

Applicable Specification Number 4482 / P. 224A

Material to be Tested S/S 3" Test Medium Used AIR

Max. Chloride Allowed N/A Results of Most Recent Chloride Test N/A Date Performed N/A

Max./Min Test Press. Allowed 20±5 PSIG Act. Test Press. 22 PSIG

Temperature of: Thermometer Number N/A

Medium 54 °F Material 56 °F Atmospheric 56 °F

Test Gage:

CDS # 395-A Cal. Date 11-16-87 Re-Cal Due Date 5/88

Req'd Exam. Press. 20±5 PSIG Actual Exam Press. 22 PSIG

Start Time 7:15 Complete Time 8:06

Test Results (Acceptable/Unacceptable)

PNEUMATIC TEST ONLY. / WALK DOWN COMPLETE

Remarks: PEN. # 1212 NOZ. # 6

INFORMATION ONLY

[signature] II 57 3-7-88 [signature] 3/8/88

QC Acceptance Date Reviewed By Date

ASR# 15-64 (9/87)
FILE ID 26033

RECEIVED ... 20 1989

MK-FERGUSON
A MORRISON KNUDSEN COMPANY

F.S. No.# 34.11C

HYDRO/PNEUMATIC TEST RECORD

Distribution:
Project Records Center-C

I.R. No.# 57-22988-03 PAGE 1 OF 2

Test Boundaries (1) D195553 (2) D195553

Project No. 1780 Test No. N/A Location AUXILIARY PIT Date of Test 2-29-88

System Name RECYCLE WASTE TO "H" AREA

Spool/Mark # of Piping/Vessel D195553 Dwg. # & Rev. 2

Applicable Specification Number 4482 / P-224A

Material to be Tested S/S 3" Test Medium Used WATER

Max. Chloride Allowed 250 PPM Results of Most Recent Chloride Test 1.0 ppm Date Performed 5-23-86

Max./Min Test Press. Allowed 375+10 PSIG Act. Test Press. 380 PSIG

Temperature of: Thermometer Number 44-A

Medium 54 °F Material 57 °F Atmospheric 57 °F

Test Gage:

CDS # 251-A Cal. Date 1/88 Re-Cal Due Date 7/88

Req'd Exam. Press. 375+10 PSIG Actual Exam Press. 380 PSIG

Start Time 5:00 Complete Time 5:25

Test Results (Acceptable/Unacceptable)

HYDRO TEST ONLY. / WALK DOWN COMPLETE

Remarks: PEN. #918 Noz. #6

TION ONLY

[signature] II 57 3-7-88

[signature] II 57 2-29-88 [signature] 3/1/88

QC Acceptance Date Reviewed By Date

ASR# 15-64 (9/87)
FILE ID 26033

RECEIVED MAR 20 1989

MK-FERGUSON
A GORRISON KRUGGER COMPANY

FS No.# 34.11C

HYDRO/PNEUMATIC TEST RECORD

IR No.# 57-021888-06

~~IR No.# 57-21888-6~~ [illegible] 2-18-88 PAGE 1 OF 2

"Q" ☐ "S" ☑
Distribution
Project Records Center-Constr.

Test Boundaries ① D195559 ② D195559

Project No. 1780 Test No. N/A Location AUXILIARY PUMP PIT Date of Test 2-18-88

System Name SLUDGE FROM "H" AREA

Spool/Mark # of Piping/Vessel D195559 Dwg. # & Rev. 2

Applicable Specification Number 4482 / P224A

Material to be Tested 5/5 – 3" PIPE Test Medium Used WATER

Max. Chloride Allowed 250 PPM Results of Most Recent Chloride Test 1.0 PPM Date Performed 5-23-86

Max./Min Test Press. Allowed 375 + 10 PSIG Act. Test Press. 380 PSIG

Temperature of: Thermometer Number 44-A

Medium 53 °F Material 57 °F Atmospheric 57 °F

Test Gage:

CDS # 251-A Cal. Date 1/88 Re-Cal Due Date 7/88

Req'd Exam. Press. 375 + 10 PSIG Actual Exam Press. 380 PSIG

Start Time 10:45 Complete Time 11:05

Test Results (Acceptable/~~Unacceptable~~)
MAINTAIN PRESSURE BY HYDRO PUMP
ACCEPTED, HYDRO TEST ONLY

[illegible] 2-18-88 ~~[illegible]~~ WALK DOWN COMPLETE FROM ① TO ②

Remarks: PEN.# 938 NOZ.# 7

INFORMATION ONLY

[signature] II57 2-18-88
QC Acceptance Date

[signature] 2/19/88
Reviewed By Date

ASR# 15-64 (9/87)
FILE ID 26033

RECEIVED [illegible] 1989

MK-FERGUSON

FS No. # 34.11C

HYDRO/PNEUMATIC TEST RECORD

I.R. No. # 57-3788-15 PAGE 1 OF 2

Distribution: Project Records Center-Const

Test Boundaries (1) D195546 (2) D195546

Project No. 1750 Test No. N/A Location AUXILIARY PUMP PIT Date of Test 3-7-88

System Name FROM VALVE BOX

Spool/Mark # of Piping/Vessel D195546 Dwg. # & Rev. 2

Applicable Specification Number 4482 / A 224A

Material to be Tested S/S 3" Test Medium Used WATER

Max. Chloride Allowed 250PPM Results of Most Recent Chloride Test 1.0PPM Date Performed 5-23-86

Max./Min Test Press. Allowed 375+10 PSIG Act. Test Press. 385 PSIG

Temperature of: Thermometer Number N/A

Medium 54 °F Material 56 °F Atmospheric 56 °F

Test Gage:

CDS # 251-A Cal. Date 1/88 Re-Cal Due Date 6/88

Req'd Exam. Press. 375+10 PSIG Actual Exam Press. 385 PSIG

Start Time 9:55 Complete Time 10:10

Test Results (Acceptable/Unacceptable)

HYDRO TEST ONLY. / WALK DOWN COMPLETE

Remarks: Pen # 1213 Nbr. 5

INFORMATION ONLY

QC Acceptance 3-7-88 Date Reviewed By 3/8/88 Date

ASR# 15-64 (9/87)

FILE ID 26033

RECEIVED MAR 20 1989

ASR 2-98 (11/80)

FS. 34.11D, 34.11C, 34.08A

IR NO. 41-022388-03

"Q" ☐	"S" ☑
Distribution:	
Project Records Center - Constr.	
Division Engineer	
T & I	
Pipe	

FILE ID #12800

Savannah River Plant
PRESSURE TEST REPORT

Project 1780 AMO 8-1047 N/A Area -S- Bldg. No. AUX Dwg. W750150

Test Location: Shop N/A Field ✓ Service PEN NOZZELES

Fabrication: Pipe ✓ Tank N/a Equipment N/a Size 3" Material S/S

Type Test: Hydro N/a Pneumatic ✓ Halide N/a Vacuum N/a

Test Medium: Water N/a Oil N/a Air ✓ Freon & Nitrogen N/a Vacuum N/a

Location: From (1) W750150 To (2) W750150

Line No. NOZZELES 5, 6, [redacted] 8, 9. PENS 945, 938, [redacted], 937, 936

Actual Test Pressure: 20.5 Vacuum N/a Actual Length of Test 30 min.

Special Instructions: Ref. Safety Procedure No. 52 - T&I S.I. T&I 5

(Protection: Safety, Blank Offs, Etc.)

Acceptance Criteria: Test Pressure 20 +-5psi Time (Minimum 15 min. or as req.) Vacuum N/a

Per Spec. 4482 P-Code P224 Dwg. N/a Teletype No. _____ Local Design _____

Remarks TEST OK

Gauge CDS No. 395 A Expires 5-88

Test Requested by _____ Div. Eng. per EJ BRAUN Area Eng.

	Name	Title
Test Accepted by: Testing & Inspection	John R. Lindsey	MK. QC
Craft Foreman	E. J. Neymola	FOREMAN
Operations*		

Date 2-23-88

* Optional

INFORMATION ONLY

RECEIVED MAR 20 1989

DA

MK-FERGUSON

FS No. 34.11C

HYDRO/PNEUMATIC TEST RECORD

IRN #57-021888-05

~~IRN #57-21888-5~~ 2-18-88 PAGE 1 of 2

Distribution:

Project Records Center-Constr.

Test Boundaries (1) D195560 (2) D195560

Project No. 1780 Test No. N/A Location AUXILIARY PUMP PIT Date of Test 2-18-88

System Name FROM 40 VALVE BOX

Spool/Mark # of Piping/Vessel D195560 Dwg. # & Rev. 2

Applicable Specification Number 4482 / P-224A

Material to be Tested S/S — 3" PIPE Test Medium Used WATER

Max. Chloride Allowed 250 PPM Results of Most Recent Chloride Test 1.0 PPM Date Performed 5-23-86

Max./Min Test Press. Allowed 375+10 PSIG Act. Test Press. 380 PSIG

Temperature of: Thermometer Number 44A

Medium 53 °F Material 57 °F Atmospheric 57 °F

Test Gage:

CDS # 251-A Cal. Date 1/88 Re-Cal Due Date 7/88

Req'd Exam. Press. 375+10 PSIG Actual Exam Press. 380 PSIG

Start Time 10:45 Complete Time 11:05

Test Results (Acceptable/~~Unacceptable~~)

MAINTAIN PRESSURE BY HYDRO PUMP

ACCEPTED, HYDRO TEST ONLY

WALK DOWN COMPLETE FROM (1) TO (2)

Remarks: PEN # 939 No2. # 7

INFORMATION ONLY

QC Acceptance 2-18-88 Date

Reviewed By 2/19/88 Date

ASR# 15 - 64 (9/87)

FILE ID 26033

RECEIVED MAR 20 1989

ASR 4-128
Rev. 8/84
File ID #9830

Test Report # 78Y
F.S. 34.11C

Project Records Center-Constr.

INCREMENT LEAK TESTS
(FIELD PIPING)

PROJECT: 1780 AREA: S

DRAWING NOS: D195553 (AUX.)

SYSTEM: Phicoss Jacket P-224A EWT. 6-19-87

TEST DATA

Type of Test			Pipe	Core	Line No.	From	To	CDS No.	Pressure	Time	QC Inspector	Date Acc.
Hydro	Halide	Other										
	✓		✓		Pen 918	1	3	948 1/86 359B 1/87	15 ft	15 min.	[illegible]	10/17/86
✓			✓		Pen 918	1	2	595 2-87	125 PSI	30	J.R.L.	10/20/86

INFORMATION ONLY

COMMENTS:

RECEIVED MAR 20 1989

ASR 2-98 (11/80)

FS. 34.11D, 34.11C, 34.08A

IR NO. 41-022388-03
TEST REPORT # 83T

"Q" ☐	"S" ☑
Distribution:	
Project Records Center - Constr.	
Division Engineer	
T & I	
Pipe	

FILE ID #12800

Savannah River Plant
PRESSURE TEST REPORT

Project 1780 AMO 8-1047 N/A Area -S- Bldg. No. AUX Dwg. W750150

Test Location: Shop N/A Field ✓ Service PEN NOZZELES

Fabrication: Pipe ✓ Tank N/A Equipment N/A Size 3" Material S/S

Type Test: Hydro N/A Pneumatic ✓ Halide N/A Vacuum N/A

Test Medium: Water N/A Oil N/A Air ✓ Freon & Nitrogen N/A Vacuum N/A

Location: From (1) W750150 To (2) W750150

Line No. NOZZELES 5, 6, 7, 8, 9. PENS 945, 938, 939, 937, 936

Actual Test Pressure: 20.5 Vacuum N/A Actual Length of Test 30 min.

Special Instructions: Ref. Safety Procedure No. 52 - T&I S.I. T&I 5

(Protection: Safety, Blank Offs, Etc.)

Acceptance Criteria: Test Pressure 20 +-5 psi Time (Minimum 15 min. or as req.) Vacuum N/A

Per Spec. 4482 P-Code P224 Dwg. N/A Teletype No. _____ Local Design _____

Remarks TEST OK

Gauge CDS No. 395 A Expires 5-88

Test Requested by _____ per EJ BRAUN
Div. Eng. Area Eng.

	Name	Title
Test Accepted by: Testing & Inspection	John R. Lindsey	MK. QC
Craft Foreman	E J Nagmola	FOREMAN
Operations*		

Date 2-23-88

* Optional

RECEIVED MAR 20 1989

INFORMATION ONLY

WOLFE PRINTING CO., AUGUSTA, GA 30903

FS. 34.00
IR. 41-022988-02 Test P78S

Distribution:
Project Records Center - Constr.
Division Engineer
T & I
Pipe

FILE ID #12800

Savannah River Plant
PRESSURE TEST REPORT

34.11C

Project 1780 AMO 8-1047 N/a Area -5- Bldg. No. AUX PIT Dwg. W750290

Test Location: Shop N/a Field ✓ Service PEN NOZZELES

Fabrication: Pipe ✓ Tank N/a Equipment N/A Size 3" Material S/S

Type Test: Hydro N/A Pneumatic ✓ Halide N/a Vacuum N/a

Test Medium: Water N/a Oil N/a Air ✓ Freon & Nitrogen N/a Vacuum N/a

Location: From (1) W750290 To (2) W750290

Line No. NOZZELES 2, 3, 4, 5, 6, 7, ON PENS 919, 911, 983, [redacted], 918, [redacted]

Actual Test Pressure: 21 psi Vacuum N/a Actual Length of Test 30 min.

Special Instructions: Ref. Safety Procedure No. 52 - T&I S.I. T&I 5

(Protection: Safety, Blank Offs, Etc.)

Acceptance Criteria: Test Pressure 20 psi +-5 Time (Minimum 15 min. or as req.) Vacuum N/a

Spec. 4482 P-Code P224A Dwg. N/a Teletype No. N/a Local Design N/a

Remarks TEST

Gauge CDS No. 150 A Expires 7-88

Test Requested by _____ (Div. Eng.) per EJ BRAUN (Area Eng.)

	Name	Title
Test Accepted by: Testing & Inspection	John R. Lindsay	MK QC
Craft Foreman	L. J. Nafrola	FOREMAN
Operations*		

Date 2-29-88

* Optional

RECEIVED MAR 20 1989

INFORMATION ONLY

WOLFE PRINTING CO., AUGUSTA, GA 30901

ASR 2-98 (11/80)

F-S 34-11 C

"Q" ☐ "S"
Distribution:
Project Records Center - Const
Division Engineer
T & I
Pipe

FILE ID #12800

Savannah River Plant
PRESSURE TEST REPORT

W743
W761
W761
W761
W7615
W7615

Project 1780 AMO 8-1047 N/A Area H Bldg. No. 241 Dwg. W7615

Test Location: Shop N/A Field ✓ Service PROCESS WASTE LINE (JACKET)

Fabrication: Pipe ✓ Tank N/A Equipment N/A Size 4"-6"-10" Material C/S

Type Test: Hydro ✓ Pneumatic N/A Halide N/A Vacuum N/A

Test Medium: Water ✓ Oil N/A Air N/A Freon & Nitrogen N/A Vacuum N/A

Location: From (B5) INSIDE EAST WALL OF AUXILIAR PUMP PIT W761588 To (B9) EAST OF TANK #41 (RCZ37) W

Line No. SDP2, SF16104, RCZ37 (D5) NORTH OF TANK #40 (SF161 W7

Actual Test Pressure: 140 PSIG Vacuum N/A Actual Length of Test 30 min

Special Instructions: Ref. Safety Procedure No. 52 - T&I S.I. T&I 5

(Protection: Safety, Blank Offs, Etc.)

Acceptance Criteria: Test Pressure 125 PSIG Time (Minimum 15 min. or as req.) Vacuum N/A

Per Spec. N/A P-Code N/A Dwg. N/A Teletype No. PD785 Local Design N/A

Remarks TEST OK TESTED AS PER IDM PD785

Gauge CDS No. 228A Expires 4-88

Test Requested by C. D. SMITH (Div. Eng.) per J. H. RISHER (Area Eng.)

RECEIVED MAR 2 0 1989

	Name	Title
Test Accepted by: Testing & Inspection	C. Skipper	QC
Craft Foreman	Steve L Meador	Pipe
Operations*	Donna Owens	WMP

Date 11-6-87

* Optional

INFORMATION ONLY

INFORMATION ONLY

R 2-98 (11/80)

F-S-34-11C

Test Report # 839

"Q" ☐	"S" ☑
Distribution:	
Project Records Center - Constr.	
Division Engineer	
T & I	
Pipe	

FILE ID #12800

Savannah River Plant
PRESSURE TEST REPORT

SK. 1780-Y340-SF16104 A, B, C, D, E,
W743749
W761580
W761581
W761582
W761587
W761588

Project 1780 AMO 8-1047 N/A Area H Bldg. No. 241 Dwg. W761588

Test Location: Shop N/A Field ✓ Service PROCESS WASTE LINE CORE

Fabrication: Pipe ✓ Tank N/A Equipment N/A Size 3" Material S/S

Type Test: Hydro N/A Pneumatic ✓ Halide N/A Vacuum N/A

Test Medium: Water N/A Oil N/A Air ✓ Freon & Nitrogen N/A Vacuum N/A

Location: From (B5) INSIDE EAST WALL OF AUXILIAR PUMP PIT W761588 (SDP2) To (D5) NORTH OF TANK # 40 SF16104 W743749

Line No. SDP2, SF16104

Actual Test Pressure: 15 PSIG Vacuum N/A Actual Length of Test AS-REQ. min.

Special Instructions: Ref. Safety Procedure No. 52 - T&I S.I. T&I 5

(Protection: Safety, Blank Offs, Etc.)

Acceptance Criteria: Test Pressure 15 PSIG Time (Minimum 15 min. or as req.) Vacuum N/A

Per Spec. N/A P-Code N/A Dwg. N/A Teletype No. KN0003 12-5-86 Local Design N/A

Remarks TEST OK TESTED AS PER ATTACHED PAPERS

Gauge CDS No. 888 Expires 1-88

Test Requested by C. D. SMITH (Div. Eng.) per J. H. RISHER (Area Eng.)

	Name	Title
Test Accepted by: Testing & Inspection	Joe Holland	
Craft Foreman	Steve L Meador	PIPE
Operations*	Donna Owens	WMP

Date 11-3-87

Optional

INFORMATION ONLY

INFORMATION ONLY

RECEIVED MAR 20 1989

ASR 2-98 (11/80)

4

FS-3411 C

Test Report F-83 P

"Q" ☐ "S" ☑
Distribution:
Project Records Center - Constr.
Division Engineer
T & I
Pipe

FILE ID #12800

Savannah River Plant
PRESSURE TEST REPORT

SK. 1780-Y340-SF16104 A,B,C,D,E,F
W 743749
W 761580
W 761581
W 761587
W 761582

Project 1780 AMO 8-1047 N/A Area H Bldg. No. 241 Dwg. W761588

Test Location: Shop N/A Field ✓ Service PROCESS WASTE LINE (CORE)

Fabrication: Pipe ✓ Tank N/A Equipment N/A Size 3" Material S/S

Type Test: Hydro ✓ Pneumatic N/A Halide N/A Vacuum N/A

Test Medium: Water ✓ Oil N/A Air N/A Freon & Nitrogen N/A Vacuum N/A

Location: From (B5) INSIDE EAST WALL OF AUXILIAR PUMP PIT (W761588) (SDP2) To (D5) NORTH OF TANK II 40 SF16104 W743749

Line No. SDP2, SF16104

Actual Test Pressure: 380 PSIG Vacuum N/A Actual Length of Test 30 min.

Special Instructions: Ref. Safety Procedure No. 52 - T&I S.I. T&I 5

(Protection: Safety, Blank Offs, Etc.)

Acceptance Criteria: Test Pressure 375 PSIG Time (Minimum 15 min. or as req.) Vacuum N/A

Per Spec. 4482 P-Code 224A Dwg. N/A Teletype No. N/A Local Design N/A

Remarks TEST OK

Gauge CDS No. 252 A Expires 1-88

Test Requested by C. D. SMITH (Div. Eng.) per J. H. RISHER (Area Eng.)

	Name	Title
Test Accepted by: Testing & Inspection	Joe Holland	QC
Craft Foreman	Steve Meadows	PIPE
Operations*	Donna Owen	WMP

Date 11-4-87

* Optional

INFORMATION ONLY

RECEIVED

INFORMATION ONLY

Last

2-98 (11/80)

F.S. 34 11 C
Test Report #78R

"Q" ☐	"S" ☑
Distribution:	
Project Records Center - Constr.	
Division Engineer	
T & I	
Pipe	

FILE ID #12800

Savannah River Plant
PRESSURE TEST REPORT

W 761580
W 761581
W 761582
W 761587
W 761588

Project 1780 AMO 8-1047 N/A Area H Bldg. No. 241 Dwg.

Test Location: Shop N/A Field ✓ Service PROCESS WASTE LINE (CORE)

Fabrication: Pipe ✓ Tank N/A Equipment N/A Size 3" Material S/S

Type Test: Hydro ✓ Pneumatic N/A Halide N/A Vacuum N/A

Test Medium: Water ✓ Oil N/A Air N/A Freon & Nitrogen N/A Vacuum N/A

Location: From (B5) INSIDE EAST WALL OF AUXILIAR PUMP PIT W761588 To (B9) EAST OF TANK II 41 W761580

Line No. RCZ 37

Actual Test Pressure: 380 PSIG Vacuum N/A Actual Length of Test 30 min.

Special Instructions: Ref. Safety Procedure No. 52 - T&I S.I. T&I 5

(Protection: Safety, Blank Offs, Etc.)

Acceptance Criteria: Test Pressure 375 PSIG Time (Minimum 15 min. or as req.) Vacuum N/A

Per Spec. 4482 P-Code 224A Dwg. N/A Teletype No. N/A Local Design N/A

Remarks

Gauge CDS No. 252 A Expires 1-88

Test Requested by C. D. SMITH (Div. Eng.) per J. H. RISHER (Area Eng.)

	Name	Title
Test Accepted by: Testing & Inspection	Joe Holland	QC
Craft Foreman	[illegible]	PIPE
Operations*	[illegible]	WMP

Date 11-4-87

* Optional

RECEIVED MAR 20 1989

INFORMATION ONLY

INFORMATION ONLY

ASR 2-98 (11/80)

"Q" ☐ "S" ☑
Distribution:
Project Records Center - Constr.
Division Engineer
T & I
Pipe

FILE ID #12800

F.S. 34 LPC
Test Report #789

Savannah River Plant
PRESSURE TEST REPORT

W761580
W761581
W761582
W761587
W761588

Project 1780 AMO 8-1047 N/A Area H Bldg. No. 241 Dwg.

Test Location: Shop N/A Field ✓ Service PROCESS WASTE LINE (CORE)

Fabrication: Pipe ✓ Tank N/A Equipment N/A Size 3" Material S/S

Type Test: Hydro N/A Pneumatic ✓ Halide N/A Vacuum N/A

Test Medium: Water N/A Oil N/A Air ✓ Freon & Nitrogen N/A Vacuum N/A

Location: From (85) INSIDE EAST WALL OF AUXILIAR PUMP PIT W761588 To (89) EAST OF TANK #41 W761580

Line No. RCZ37

Actual Test Pressure: 15 PSIG Vacuum N/A Actual Length of Test AS-REQ mir

Special Instructions: Ref. Safety Procedure No. 52 - T&I S.I. T&I 5

(Protection: Safety, Blank Offs, Etc.)

Acceptance Criteria: Test Pressure 15 PSIG Time (Minimum 15 min. or as req.) Vacuum N/A

Per Spec. N/A P-Code N/A Dwg. N/A Teletype No. KN0003 12-5-86 Local Design N/A

Remarks TEST OK TESTED AS PER ATTACHED PAPERS

Gauge CDS No. 888 Expires 1-88

Test Requested by C. D. SMITH (Div. Eng.) per J. H. RISHER (Area Eng.)

	Name	Title
Test Accepted by: Testing & Inspection	Joe Holland	
Craft Foreman	[illegible]	PIPE
Operations	[illegible]	WMP

Date 11-3-87

* Optional

INFORMATION ONLY

INFORMATION ONLY

RECEIVED MAR 21 1988

"INFORMATION ONLY"

File Code No. 2.1.8.5

DEFENSE WASTE PROCESSING FACILITY

PART IV-A PROCEDURE

ORIGINAL

CHECKOUT OF THE INTERAREA TRANFER LINE BETWEEN THE H-AREA FENCE AND THE AUXILIARY PUMP PIT

APPROVALS:

PROCEDURE PREPARED BY:	T. R. SULLIVAN	9/17/87 DATE
TASK TEAM APPROVAL:	TASK TEAM LEADER	10/28/87 DATE
	TASK TEAM SUPERVISOR	10/28/87 DATE
PROCEDURE COMPLETED BY:	TASK TEAM LEADER	3/28/89 DATE
COMPLETION APPROVAL:	TASK TEAM SUPERVISOR	3/30/89 DATE
FILED BY:	STARTUP LIAISON FILE CLERK	4/3/89 DATE

DISTRIBUTION:

Task Team Leader, (2 copies) - K. O. Darden, 704-11S
AES Design Engineer - R. W. Hanson Louviers, L4119
J. W. McKibben, TC-S1
Startup Liaison Master File, 704-8S

SCOPE: This procedure details the commissioning plans and requirements for the Interarea Transfer Line from the Auxilairy Pump Pit to the H-Area fence (at approx. coordinates N 70971.5 / E 63380) as detailed in Part II Turnover Package 34.11C.

GENERAL: The Interarea Transfer Line from the Auxilairy Pump Pit to the H-Area fence will be commissioned by the Task Team.

Interim Waste will supply information for the Interarea Transfer Line from the 241-H Tank Farm to the H-Area fence.

This Part IV-A procedure will be completed by the Task Team in accordance with the Construction Quality Verification Plan. All verification steps required by this procedure are over and above those required by the Construction Quality Verification Checklists and are required by the contract, and/or the SRC QA Plan, and/or specific Project related documentation.

The verifications in this procedure are performed by reviewing the appropriate quality verification documentation and recording its document number. If any reviewed document does not have an identifying number, it must be copied and the copy attached to this procedure.

SAFETY: Comply with Plant and/or Construction Safety Rules, whichever is more stringent. The following Safety Manual Items (SMI) apply to this turnover package:

Safety Manual Item 103 - Safety Rules for Operations personnel in the vicinity of Construction Division Work.

Safety Manual Item 24 - Barricades.

Q-ITEMS: There are no "Q" construction or "Q" checking requirements for this turnover package.

WITNESS POINTS: This Part IV-A procedure does not contain any Witness Points which require the QV Checker to schedule a visual inspection of the area or facility in question in conjunction with the continuation of construction. Any Witness Points that might arise should be scheduled so that they do not interrupt construction activities. Missing a Witness Point at its prescribed time will eliminate the opportunity to make the check.

REFERENCES: The following references were used to prepare this Part IV-A procedure.

Project Specifications:

C-18, Rev.5	Installation of Utility Piping
C-19, Rev.6	Trenching & Backfilling
E-42, Rev.1	Interarea Cathodic Protection System
P-01, Rev.12	Project Product and Service Index
P-3, Rev.4	Installation of Embedded Piping
S-20, Rev.3	Furn., Fabr. & Delivery of Sructural Steel
Dupont Site Spec. 7196	Thermal Insulation Specification
Du Pont Site Spec. 7797	Corrosion Protection for Underground Piping

Project Documents: Letter, M. N. Borders to F. G. Gatlin, et al, 12/10/86, Rev. 1 (PC-0000277)

Drawings:

W750150, Rev.# 11	Aux. Sludge Tank P & ID (sheet 1 of 2)
W750209, Rev.# 8	Aux. Leak Detection Boxes P & ID (sheet 1 of 2)
W750287, Rev.# 12	Aux. Precipitate Tank P & ID (sheet 1 of 2)
W750290, Rev.# 10	Aux. recycle Tank P & ID (sheet 1 of 2)
W750468, Rev.# 4	Aux. Leak Detection Boxes P & ID (sheet 2 of 2)
W778024, Rev.# 5	HDB-8 Diversion Box P & ID (sheet 1 of 3)

			DATE	SIGNATURE
Checklists:	511.S.205	Auxiliary Pump Pit Wall APW-001-277		
	511.S.207	Auxiliary Pump Pit Wall APW-001-286		
	511.S.219	Leak Detection Boxes & Underground Piping		
	550.S.100	Connection of the H-Area Diversion Box to the Auxiliary Pump Pit		
	550.S.200	Connection of the Tank Farm to the Auxiliary Pump Pit		
	TOP 34.11C	Interarea Transfer Lines Between H-Area & the Auxiliary Pump Pit		

SECTION 1.0 - VERIFICATION REQUIREMENTS

The following steps are verifications that all activities by the Interarea Task Team and verifications of work performed by other Task/Resource Teams have been completed prior to the Preliminary Acceptance Inspection (PAI).

1.1) Review the following Check list to verify they have been completed and signed off on each section

Checklist No.	Title		
511.S.205	Auxiliary Pump Pit Wall APW-001-277	1/25/88	[signature]
511.S.207	Auxiliary Pump Pit Wall APW-001-286	1/25/88	[signature]
511.S.219	Leak Detection Boxes & Underground Piping	1/25/88	[signature]
550.S.100	Connection of the H-Area Diversion Box To Auxiliary Pump Pit	10/21/88	[signature]
550.S.200	Connection of the Tank Farm to the Auxiliary Pump Pit	5/9/88	[signature]
TOP.3411C	Interarea Transfer Lines Between H-Area & Auxiliary Pump Pit	5/9/88	[signature]

3

DATE SIGNATURE

Information: Pipe Hydrostatic Testing - Construction is required to hydrostatically test all lines in accordance with the requirements listed in Project Specification P-01. The piping in this facility segment is designated:

1.2) Review the QV checklist documentation to verify the hydrostatic testing of the following 18 pipes:

1. Line No.: SDP 1 (core)

   Location: APP Sludge Cell Wall
   Nozzle #6 to 241-H Tank #51 VB
   Test Pressure: 375 lbs.
   QV Doc. No.: 83-S 3/17/89

2. Line No.: SDP 2 (core)

   Location: APP Sludge Cell Wall
   Nozzle #7 to 241-H Tank #40 VB
   Test Pressure: 375 lbs.
   QV Doc. No.: 83-P 3/17/89

3. Line No.: PCP 341 (core)

   Location: APP Precipitate Cell Wall
   Nozzle #5 to 241-H Tank #49 VB
   Test Pressure: 375 lbs.
   QV Doc. No.: T&I Test Date 11/4/87 C. Skipper See addendum 3/17/89

4. Line No.: RCZ 9 (core)

   Location: APP Recycle Cell Wall
   Nozzle #6 to DB-8 Nozzle #8
   Test Pressure: 375 lbs.
   QV Doc. No.: 9/25/87 D.W. Saldace 3/17/89

5. Line No.: RCZ 36 (core)

   Location: APP Recycle Cell Wall
   Nozzle #7 to DB-8 Nozzle #7
   Test Pressure: 375 lbs.
   QV Doc. No.: 9/25/87 D.W. Saldace 3/17/89

	DATE	SIGNATURE
6. Line No.: RCZ 37 (core) Location: APP Recycle Cell Wall Nozzle #5 to 241-H Spare Test Pressure: 375 lbs. QV Doc. No.: 78-R	3/17/89	[illegible]
7. Line No.: SDP1 (Jacket) Location: APP Sludge Cell Pen #938 to 241-H Tank #51 VB Test Pressure: 125 lbs. QV Doc. No.: T&I Test Date 11/6/87 C. Skipper	3/17/89	[illegible]
8. Line No.: SDP2 (Jacket) Location: APP Sludge Cell Pen #939 to 241-H Tank #40 VB Test Pressure: 125 lbs. QV Doc. No.: T&I Test Date 11/6/87 C. Skipper	3/17/89	[illegible]
9. Line No.: PCP 341 (Jacket) Location: APP Precipitate Cell Wall Pen #1213 to 241-H Tank #49VB Test Pressure: 125 lbs. QV Doc. No.: T&I Test Date 11/6/87 C. Skipper See Addendum	3/17/89	[illegible]
10. Line No.: RCZ 9 (Jacket) Location: APP Sludge Cell Wall Pen #918 to DB-8 Pen #2208 Test Pressure: 125 lbs. QV Doc. No.: T&I Test Date 10/14/87 C. Skipper	3/17/89	[illegible]
11. Line No.: RCZ 36 (Jacket) Location: APP Sludge Cell Wall Pen #917 to DB-8 Pen #2209 Test Pressure: 125 lbs. QV Doc. No.: T&I Test Date 10/14/87 C. Skipper	3/17/89	[illegible]

	DATE	SIGNATURE
12. Line No.: RCZ 37 (Jacket) Location: APP Sludge Cell Wall Pen #916 to 241-H Spare Test Pressure: 125 lbs. QV Doc. No.: TRE Test Data 11/6/87 C. Skipper	3/17/89	[illegible]
13. Line No.: LDX 3 P242 - 1 Test Pressure: 375 lbs. QV Doc. No.: 100-A	3/17/89	[illegible]
14. Line No.: LDX 74 P242 - 1 Test Pressure: 375 lbs. QV Doc. No.: 100-H	3/17/89	[illegible]
15. Line No.: LDX 79 P242 - 1 Test Pressure: 375 lbs. QV Doc. No.: 100-H	3/17/89	[illegible]
16. Line No.: LDX 95 P242 - 1 Test Pressure: 375 lbs. QV Doc. No.: 100-H	3/17/89	[illegible]
17. Line No.: LDX 134 P242 - 1 Test Pressure: 375 lbs. QV Doc. No.: 100-H	3/17/89	[illegible]
18. Line No.: LDX 164 P242 - 1 Test Pressure: 375 lbs. QV Doc. No.: 100-A	3/17/89	[illegible]

DATE SIGNATURE

SECTION 2.0 - COMMISSIONING ACTIVITY OUTLINE

The following section is divided into two parts. The first part describes any verifications that are required by the Task Team that were not covered by the Construction Quality Verification Checklists. The second part is an outline of the actual commissioning activities that will be performed by the Task Team.

Information: The following verification steps are required prior to commissioning:

2.1) Verify that Distribution Station & MCC B11 (TOP 2.04A) has been accepted for turnover by the Electrical Task Team.

1/25/88 [signature]

Verify that the APP Sludge Tank (TOP 34.08A) has been accepted for turnover by the Task Team.

3/14/89 [signature]

Verify that the APP Precipitate Tank (TOP 34.08B) has been accepted for turnover by the Task Team.

3/14/89 [signature]

Verify that the APP Recycle Tank (TOP 34.08C) has been accepted for turnover by the Task Team.

3/14/89 [signature]

Verify that the Interarea Transfer Line between the APP to H-Area(TOP 34.11C) has been accepted for turnover by the Task Team.

5/9/88 [signature]

Information: The following is an outline that will be performed by the appropriate Task Teams. Special procedures (Part 4B) will be written to accomplish these steps.

2.2) Perform run-in of the SDP 1 (core) pipe line from the APP Sludge Cell Nozzle.#6 to 241-H Tank #51 VB.

Perform run-in of the SDP 2 (core) pipe line from the APP Sludge Cell Nozzle #7 to 241-H Tank #40 VB.

Perform run-in of the PCP 341 (core) pipe line from the APP Precipitate Cell Nozzle #5 to 241-H Tank #49 VB.

Perform run-in of the RCZ 9 (core) pipe line from the APP Recycle Cell Nozzle #6 to DB-8 Nozzle #8.

Perform run-in of the RCZ 36 (core) pipe line from the APP Recycle Cell Nozzle #7 to DB-8 Nozzle #7.

Perform run-in of the RCZ 37 (core) pipe line from the APP Recycle Cell Nozzle #5 to 241-H Spare.

DATE SIGNATURE

ADDENDUM TO IV-A TOP # 34.11c
PAGES 5 + 6

Information: This addendum is provided to supply additional information ("Remarks") for the IV-A listed above.

Line # PCF 341 cover + jacket is awaiting Tie-in with Tank # 49 Valve Box.

3/17/89

70-67PF

"INFORMATION ONLY"

File Code No. 2.1.8.5

DEFENSE WASTE PROCESSING FACILITY

PART IV-B PROCEDURE

ORIGINAL

RUN-IN OF THE INTERAREA TRANSFER LINES FROM H-AREA TO THE AUXILIARY PUMP PIT

APPROVALS:

PROCEDURE PREPARED BY:	C. O. Williams C. O. WILLIAMS	10/16/87 DATE
TASK TEAM APPROVAL:	K. O. Darden TASK TEAM LEADER	2/18/88 DATE
	JR [illegible] TASK TEAM SUPERVISOR	2-20-88 DATE
PROCEDURE COMPLETED BY:	M W Lewis TASK TEAM LEADER	5/8/89 DATE
COMPLETION APPROVAL:	Will T. Davis TASK TEAM SUPERVISOR	5/8/89 DATE
FILED BY:	Denise Karor STARTUP LIAISON FILE CLERK	5/9/89 DATE

DISTRIBUTION:

Task Team Leader, (2 copies) - K. O. Darden, 704-11S
Du Pont Construction Field Engineer: J. K. Blakenship, SAAB
AES Design Engineer - P. A. Morse, Louviers, 4123
Task Team File Clerk Marcelle Michael, 704-11S
Document Distribution Center D. M. McCorkle, TC-S1 Box 7
Central Files, 703-A

SCOPE: This procedure covers the run-in of the Interarea Transfer Lines from H-Area to the Auxiliary Pump Pit as detailed in Part II turnover package and Part IV-A 34.11C.

SAFETY: Comply with plant and /or Construction Safety Rules, whichever is more stringent. The following Safety Manual Items (SMI) apply to this turnover package:

Safety Manual Item 103	Safety Rules for Operations personnel in the vicinity of Construction Division Work.
Safety Manual Item 24	Barricades.
Safety Manual Item 32	Work Clearance Permits
Safety Manual Item 22	Locking, Tagging and Trying.

REFERENCES: The following references were used to prepare this Part IV-B procedure.

Project Specifications:

C-19, Rev.6	Trenching and Backfilling.
P-01, Rev.15	Project Product and Service Index
P-11, Rev.6	Furnishing and Installing Process and Service Piping
Du Pont Site Spec 7797	Corrosion Protection for Underground Piping
TOPS 34.11C	Part II Turnover Package
TOPS 34.08a	APP Sludge Tank and Sump
TOPS 34.08b	APP Precipitate Tk & Sump
TOPS 34.08c	APP Recycle Tank and Sump

			DATE	SIGNATURE
Drawings:	W750150, Rev.#11	APP Sludge Tank P & ID (Sht. 1 of 2).		
	W750209, Rev.#8	APP Leak Detection Boxes P & ID (Sht 1 of 2)		
	W750287, Rev.#12	APP Precipitate Tank P & ID (Sht 1 of 2)		
	W750290, Rev.#10	APP Recycle Tank P & ID (Sht. 1 of 2)		
	W750468, Rev.#4	APP Leak Detection Boxes P & ID (Sht. 2 of 2)		
	W778024, Rev.#5	HDB-8 Diversion Box P & ID (Sht 1 Of 3)		

Prior to testing any of the Transfer lines described in this procedure verify that the following TOPS have been completed and all instruments are operational.

TOPS 34.08a	3-14-89	RD Temples
TOPS 34.08b	3-14-89	RD Temples
TOPS 34.08c	3-14-89	RD Temples
	3-14-89	RD Temples

DATE SIGNATURE

GENERAL INFORMATION:

This Procedure along with a written Job Plan will be used to Run-in the Interarea Transfer Line from the DB-8 and H-Area Tank Farm to the Auxiliary Pump Pit.

I. RUN-IN PROCEDURE OF THE RECYCLE LINES FROM DB-8 TO THE APP

1. Run-in of RCZ 36 (3" SST Core Pipe)

A. Verify that Leak Detection Box No. 130 at the Auxiliary Pump Pit is dry.

2-26-88 RD Templer

B. Introduce liquid into Nozzle #7 on the South wall of the DB-8.

2-26-88 RD Templer

C. Verify that the liquid exits Nozzle #7 on the East wall of the Auxiliary Pump Pit, Recycle Cell (#2).

2-26-88 SD Johnson

D. Verify that Leak Detection Box No. 130 at the Auxiliary Pump Pit is dry.

3-14-89 RD Templer

2. Run-in of RCZ 9 (3" SST Core Pipe)

A. Verify that Leak Detection Box No. 130 at the Auxiliary Pump Pit is dry.

3-14-89 RD Templer

B. Introduce liquid into Nozzle #8 on the South wall of the DB-8.

2-26-88 RD Templer

DATE SIGNATURE

C. Verify that the liquid exits Nozzle #6 on the East wall of the Auxiliary Pump Pit, Recycle Cell (#2).

2-26-88 S.D. Johnson

D. Verify that Leak Detection Box No. 130 at the Auxiliary Pump Pit is dry.

3-14-89 RD Templeo

NOTE THE FOLLOWING STEPS WILL BE PERFORMED JUST PRIOR TO THE START UP OF THE TRANSFER FACILITY WITH HEALTH PROTECTION PRESENT.

II. RUN-IN PROCEDURE FOR THE SLUDGE AND PRECIPITATE LINES FROM THE H-TANK FARM TO THE AUXILIARY PUMP PIT.

1. Run-in of SDP-1 (3" SST Core Pipe)

A. Verify that Leak Detection Box No. 50 at the Auxiliary Pump Pit is dry.

3-14-89 RD Templeo

B. Introduce liquid into the line approx. 20 ft. from Tank #51 Valve Box.

2-19-88 RD Templeo

C. Verify that the liquid exits Nozzle #6 on the East wall of the Auxiliary Pump Pit Sludge Cell (#1).

2-19-88 C.D. Williams

D. Verify that Leak Detection Box No. 50 at the Auxiliary Pump Pit is dry.

2. Run-in of SDP 2 (3" SST Core Pipe)

A. Verify that Leak Detection Box No. 50 at the Auxiliary Pump Pit is dry.

3-14-89 RD Templeo

B. Introduce liquid into the line appx. 20 ft. from Tank # 40 Valve Box

2-19-88 RD Templeo

DATE SIGNATURE

C. Verify that the liquid exits Nozzle #7 on the East wall of the Auxiliary Pump Pit, Sludge Cell (#1).

2-19-88 C.O. Williams

D. Verify that Leak Detection Box No. 50 at the Auxiliary Pump Pit is dry.

3-14-89 RD Templer

3. Run-in of RCZ 37 (3" SST Core Pipe)

A. Verify that Leak Detection Box No. 190 at the Auxiliary Pump Pit is dry.

* [illegible]

B. Introduce liquid into the line located on the North-East corner of tank 41.

* [illegible]

C. Verify that the liquid exits Nozzle # 5 on the East wall of the Auxiliary Pump Pit, Recycle Cell (#3).

* [illegible]

D. Verify that Leak Detection Box No. 190 at the Auxiliary Pump Pit is dry.

* [illegible]

3. Run-in of PCP 341 (3" SST Core Pipe)

A. Verify Leak Detection Box No. 70 at the Auxiliary Pump Pit is dry.

3-14-89 RD Templer

B. Introduce liquid into the line approx.20 ft. from Tank #49 Valve Box.

2-19-88 RD Templer

C. Verify liquid exits Nozzle #5 on the East wall of the Auxiliary Pump Pit Precipitate Cell (#3).

2-19-88 C.O. Williams

D. Verify Leak Detection Box No. 70 at the Auxiliary Pump Pit is dry.

* see addendum page

34.11C

RCZ 37 is a spare line to H-Area which is not complete. The design has not been completed and no decision has been made regarding where line will ultimately be routed. No run-in items will be performed by the Interarea Transfer Task Team.

M W Lewis 5/18/89

ASR 2-98 (11/80)

Page 6 of 4A
#7) Pen 938 to Tank 51
#9) Pen 1213 to Tank 49

F-S-34-11C

"Q" ☐	"S" ☑
Distribution:	
Project Records Center - Const	
Division Engineer	
T & I	
Pipe	

FILE ID #12800

Savannah River Plant
PRESSURE TEST REPORT

W814819
W743747
W761581
W761582
W761587
W761588
W814832

Project 1780 AMO 8-1047 N/A Area H Bldg. No. 241 Dwg. W814833

Test Location: Shop N/A Field ✓ Service PROCESS WASE LINE (JACKET)

Fabrication: Pipe ✓ Tank N/A Equipment N/A Size 6"-10" Material C/S

Type Test: Hydro ✓ Pneumatic N/A Halide N/A Vacuum N/A

Test Medium: Water ✓ Oil N/A Air N/A Freon & Nitrogen N/A Vacuum N/A

Location: From (A5) INSIDE EAST WALL OF AUXILIAR PUMP PIT (W761588) (SDP1)(PCP341) To (F2) ONSLOPE EAST OF TANK #49 (1253A) W814819

Line No. SF16054-SDP1-1253A, PCP341 (B5) VALVE BOX Y351-15-1 EAST SIDE OF TANK #51 (SF16054) W743747

Actual Test Pressure: 134 PSIG Vacuum N/A Actual Length of Test 30 min.

Special Instructions: Ref. Safety Procedure No. 52 - T&I S.I. T&I 5

(Protection: Safety, Blank Offs, Etc.)

Acceptance Criteria: Test Pressure 125 PSIG Time (Minimum 15 min. or as req.) Vacuum N/A

Per Spec. N/A P-Code N/A Dwg. N/A Teletype No. PD785 Local Design N/A

Remarks TEST OK TESTED AS PER IDM PD785

Gauge CDS No. 228A Expires 4-88

Test Requested by C. D. SMITH (Div. Eng.) per M. D. CRUMPTON (Area Eng.)

	Name	Title
Test Accepted by: Testing & Inspection	C. Shipper	QC
Craft Foreman	Steve K Meador	PIPE
Operations*	Donna Owens	[illegible]

Date 11-6-87

* Optional

INFORMATION ONLY

INFORMATION ONLY

ASR 2-98 (11/80)

Page 6 of 4 A
#10) Pen 918 to DB-8 Pen 2208
#11) Pen 917 to DB-8 Pen 2208

"Q"	"S"
Distribution:	
Project Records Center - Constr.	
Division Engineer	
T & I	
Pipe	

FILE ID #12800

Savannah River Plant
PRESSURE TEST REPORT

W761584
W761585
W761586
W761587
W761588

Project 1780 AMO 8-1047 N/A Area H Bldg. No. 241 Dwg. W778343

Test Location: Shop N/A Field ✓ Service INTERAREA PIPELINE (PROCESS) (JACKET)

Fabrication: Pipe ✓ Tank N/A Equipment N/A Size 1" - 6" - 10" Material C/S

Type Test: Hydro ✓ Pneumatic N/A Halide N/A Vacuum N/A

Test Medium: Water ✓ Oil N/A Air N/A Freon & Nitrogen N/A Vacuum N/A

Location: From A24 INSIDE AUX PUMP PIT ON EAST WALL W761588 To J4 & J6 WALL OF NOZZLE BOX ON SOUTH WALL OF HDB8 W778343

Line No. RC34, RC36, J20 LEAK DETECTION BOX Y575-300-050-06-T W778343

Actual Test Pressure: 130 PSIG Vacuum N/A Actual Length of Test 30 min.

Special Instructions: Ref. Safety Procedure No. 52 - T&I S.I. T&I 5

(Protection: Safety, Blank Offs, Etc.)

Acceptance Criteria: Test Pressure 125 PSIG Time (Minimum 15 min. or as req.) Vacuum N/A

Per Spec. N/A P-Code N/A Dwg. N/A Teletype No. PD 785 Local Design N/A

Remarks TEST OK TESTED AS PER ATTACHED PAPERS

Gauge CDS No. 187A Expires 2-88

Test Requested by K. J. BLANKENSHIP (Div. Eng.) per E. J. BRAUN (Area Eng.)

	Name	Title
Test Accepted by: Testing & Inspection	C. [illegible]	QC
Craft Foreman	[illegible]	[illegible]
Operations*	[illegible]	[illegible]

Date 10-14-87

* Optional

INFORMATION ONLY

[illegible] 1/30/87

[illegible]

ASR 2-98 (11/80)

Page 6 & 7 of 4A
#8) Pen 939 to Tank 40
#12) Pen 916 to Spare

F-S 34-16C

"Q" ☐ "S"
Distribution:
Project Records Center - Con
Division Engineer
T & I
Pipe

Savannah River Plant
PRESSURE TEST REPORT

FILE ID #12800

W74
W761
W761
W761
W761
W761

Project 1780 AMO 8-1047 N/A Area H Bldg. No. 241 Dwg. W761

Test Location: Shop N/A Field ✓ Service PROCESS WASTE LINE (JACKET)

Fabrication: Pipe ✓ Tank N/A Equipment N/A Size 4"-6"-10" Material C/S

Type Test: Hydro ✓ Pneumatic N/A Halide N/A Vacuum N/A

Test Medium: Water ✓ Oil N/A Air N/A Freon & Nitrogen N/A Vacuum N/A

Location: From (B5) INSIDE EAST WALL OF AUXILIAR PUMP PIT W761588 To (B9) EAST OF TANK #41 (RcZ37)

Line No. SDP2, SF16104, RcZ37 (D5) NORTH OF TANK #40 (SF16104) W

Actual Test Pressure: 140 PSIG Vacuum N/A Actual Length of Test 30 m

Special Instructions: Ref. Safety Procedure No. 52 - T&I S.I. T&I 5

(Protection: Safety, Blank Offs, Etc.)

Acceptance Criteria: Test Pressure 125 PSIG Time (Minimum 15 min. or as req.) Vacuum N/A

Per Spec. N/A P-Code N/A Dwg. N/A Teletype No. PD785 Local Design N/

Remarks TEST OK TESTED AS PER IDM PD785

Gauge CDS No. 228A Expires 4-88

Test Requested by C. D. SMITH (Div. Eng.) per J. H. RISHER (Area Eng.)

	Name	Title
Test Accepted by: Testing & Inspection	C. Skipper	
Craft Foreman	Steve R Meador	Pipe
Operations*	Donna Owens	WMP

Date 11-6-87

* Optional

INFORMATION ONLY

INFORMATION ONLY

Test Report No. 100-H

FS.34.08B

FS.34.11C

ASR 2-98 (11/80)

Page 7 of 4A
#14) LDX 74
#15) LDX 79
#16) LDX 95
#17) LDX 134

"Q" ☐ "S" ☑
Distribution:
Project Records Center - Constr.
Division Engineer
T & I
Pipe

FILE ID #12800

Savannah River Plant
PRESSURE TEST REPORT

W750290
W750287
W750289

Project 1780 AMO 8-1047 N/A Area S Bldg. No. 511 Dwg W750468

Test Location: Shop N/A Field ✓ Service Leak Detection Boxes

Fabrication: Pipe ✓ Tank N/A Equipment N/A Size ½"-1"-1½"-2" Material S/S

Type Test: Hydro ✓ Pneumatic N/A Halide N/A Vacuum N/A

Test Medium: Water ✓ Oil N/A Air N/A Freon & Nitrogen N/A Vacuum N/A

Location: From Test Point ① W750287 To Test Point ② W750287 + W750468
W750289 + W750290

Line No. SEE below

Actual Test Pressure: 129 PSIG Vacuum N/A Actual Length of Test 30 min.

Special Instructions: Ref. Safety Procedure No. 52 - T&I S.I. T&I 5

(Protection: Safety, Blank Offs, Etc.)

Acceptance Criteria: Test Pressure 125 PSIG Time (Minimum 15 min. or as req.) Vacuum N/A

Per Spec. 4482 P-Code 242 Dwg. N/A Teletype No. DP-000 1976 Local Design N/A

Remarks Tested Per Teletype # DP-000 1976
No Leakage

Gauge CDS No. 596 Expires 10/86

Test Requested by D. Isminger (Div. Eng.) per _____ (Area Eng.)

	Name	Title
Test Accepted by: Testing & Inspection	[signature]	Tech
Craft Foreman	[signature]	Pipe Foreman
Operations*		

INFORMATION ONLY

Date 8-20-86

* Optional

ES LDX 135, 138, 141, 134, 73, 66, [redacted] 74, 79, 95 296, 297, 298, 299, 300, 304, 110, 111, 112, 113, 114,
LDX 303, 305, 306, 307, 302, 116, 309, 148, 67, 317, 308, 115, 301, 147, 65, 142, 143, 144, 145
PEN 1260 LDX 146, 60, 61, 62, 63, 64
Box # LDX 190, 130, 170, 160, 070

Test Report No. 100-A

34.08A ES-34-11C

ASR 2-98 (11/80)

Page 7 of 44
#(3) LDX 3
#(8) LDX 164

"Q" ☐ "S" ☑
Distribution:
Project Records Center - Constr.
Division Engineer
T & I
Pipe

FILE ID #12800

Savannah River Plant
PRESSURE TEST REPORT

W 750150
W 750250

Project 1780 AMO 8-1047 N/A Area S Bldg. No. 511 Dwg. W750209

Test Location: Shop N/A Field ✓ Service Leak Detection Bores

Fabrication: Pipe ✓ Tank N/A Equipment N/A Size ½"-1"-1½"-2" Material C/S

Type Test: Hydro ✓ Pneumatic N/A Halide N/A Vacuum N/A

Test Medium: Water ✓ Oil N/A Air N/A Freon & Nitrogen N/A Vacuum N/A

Location: From Test Point ① W750209 To Test Point ② W750209 - W750150
W750250

Line No. SEE below

Actual Test Pressure: 129 PSIG Vacuum N/A Actual Length of Test 30 m

Special Instructions: Ref. Safety Procedure No. 52 - T&I S.I. T&I 5
(Protection: Safety, Blank Offs, Etc.)

Acceptance Criteria: Test Pressure 125 PSIG Time (Minimum 15 min. or as req.) Vacuum N/A

Per Spec. 4482 P-Code 242 Dwg. N/A Teletype No. DP-0001976 Local Design N/A

Remarks Tested Per Teletype # DP-0001976
No Leakage

Gauge CDS No. 596 Expires 10-86

Test Requested by D. ISMINGER (Div. Eng.) per INFORMATION ONLY (Area Eng.)

	Name	Title
Test Accepted by: Testing & Inspection	[signature]	T&I
Craft Foreman	[signature]	Pipe Foreman
Operations*		

Date 8-19-86

* Optional

LINES LDX 117, 118, 119, 120, 121, 169, 168, 3, 764, 75, 4, 36, 37, 38, 39, 40, 42, 123
LDX 310, 311, 312, 313, 314, 316, 319, 122, 41, 315
PEN 986
BOX # LDX 120, 050, 180

ASR 2-98 (11/80)

PAGE 5 of 4A

#4) 6 to DB-8 NOZZLE 8
#5) 7 to DB-8 NOZZLE 7

"Q"	"S"
Distribution:	
Project Records Center - Constr	
Division Engineer	
T & I	
Pipe	

FILE ID #12800

Savannah River Plant
PRESSURE TEST REPORT

W761584
W761585
W761586
W761587
W761588

Project 1780 AMO 8-1047 N/A Area F Bldg. No. 241 Dwg. W778343

Test Location: Shop N/A Field ✓ Service INTER AREA PIPELINE (PROCESS) (CORE)

Fabrication: Pipe ✓ Tank N/A Equipment N/A Size 3/4" - 3" Material S/S

Type Test: Hydro ✓ Pneumatic N/A Halide N/A Vacuum N/A

Test Medium: Water ✓ Oil N/A Air N/A Freon & Nitrogen N/A Vacuum N/A

Location: From (P24) INSIDE AUX. PUMP PIT ON EAST WALL W761588 To (P24) INSIDE HDB8 ON SOUTH WALL NOZZLE BOX NOZZLE # 7+8 W778343 (3122-4518)

Line No. RCZ 9, RCZ 36, FLW155, FLW156 (A36) 3/4" STUB UP TO FLW. LINES INSIDE HDB8 W778343 (3122-4518)

Actual Test Pressure: 375 PSIG Vacuum N/A Actual Length of Test 30 min.

Special Instructions: Ref. Safety Procedure No. 52 - T&I S.I. T&I 5

(Protection: Safety, Blank Offs, Etc.)

Acceptance Criteria: Test Pressure 375 PSIG Time (Minimum 15 min. or as req.) Vacuum N/A

Per Spec. 4482 P-Code 224A Dwg. N/A Teletype No. N/A Local Design N/A

Remarks TEST OK

Gauge CDS No. 600 Expires 1-88

Test Requested by K. J. BLANKENSHIP (Div. Eng.) per E. J. BRAUN (Area Eng.)

	Name	Title
Test Accepted by: Testing & Inspection	D. W. Golden	T&I
Craft Foreman	[illegible]	Pipe
Operations*	[illegible]	[illegible]

Date 9-25-87

* Optional

INFORMATION ONLY

mj 11/30/87

L.A.W.

ASR 2-98 (11/80)

4

page 5 of 4A

#2) 7 to Tank 40

FS-34-11 C

Test Report #83 P

"Q" ☐	"S" ☑
Distribution:	
Project Records Center - Constr.	
Division Engineer	
T & I	
Pipe	

FILE ID #12800

Savannah River Plant
PRESSURE TEST REPORT

SK. 1780-Y340-SF16104 A,B,C,D,E,
W 743749
W 761580
W 761581
W 761587
W 761582
W 761588

Project 1780 AMO 8-1047 N/A Area H Bldg. No. 241 Dwg.

Test Location: Shop N/A Field ✓ Service PROCESS WASTE LINE (CORE)

Fabrication: Pipe ✓ Tank N/A Equipment N/A Size 3" Material S/S

Type Test: Hydro ✓ Pneumatic N/A Halide N/A Vacuum N/A

Test Medium: Water ✓ Oil N/A Air N/A Freon & Nitrogen N/A Vacuum N/A

Location: From (B5) INSIDE EAST WALL OF AUXILIAR PUMP PIT (W761588) (SDP2) To (D5) NORTH OF TANK #40 SF16104 W743749

Line No. SDP2, SF16104

Actual Test Pressure: 380 PSIG Vacuum N/A Actual Length of Test 30 m

Special Instructions: Ref. Safety Procedure No. 52 - T&I S.I. T&I 5

(Protection: Safety, Blank Offs, Etc.)

Acceptance Criteria: Test Pressure 375 PSIG Time (Minimum 15 min. or as req.) Vacuum N/A

Per Spec. 4482 P-Code 224A Dwg. N/A Teletype No. N/A Local Design N/A

Remarks TEST OK

Gauge CDS No. 252 A Expires 1-88

Test Requested by C. D. SMITH (Div. Eng.) per J. H. RISHER (Area Eng.)

	Name	Title
Test Accepted by: Testing & Inspection	Joe Holland	QC
Craft Foreman	Steve C. Meador	Pipe
Operations*	Donna Owens	WMP

Date 11-4-87

* Optional

INFORMATION ONLY

INFORMATION ONLY

SR 2-98 (11/80)

page 6 of 4A
#6) 5 to SPARE

F.S. 34.11 C
Test Report #28

"Q" ☐ "S" ☑
Distribution:
Project Records Center - Constr.
Division Engineer
T & I
Pipe

FILE ID #12800

Savannah River Plant
PRESSURE TEST REPORT

W 761580
W 761581
W 761582
W 761587
W 761588

Project 1780 AMO 8-1047 N/A Area H Bldg. No. 241 Dwg. W761588

Test Location: Shop N/A Field ✓ Service PROCESS WASTE LINE (CORE)

Fabrication: Pipe ✓ Tank N/A Equipment N/A Size 3" Material S/S

Type Test: Hydro ✓ Pneumatic N/A Halide N/A Vacuum N/A

Test Medium: Water ✓ Oil N/A Air N/A Freon & Nitrogen N/A Vacuum N/A

Location: From (85) INSIDE EAST WALL OF AUXILIAR PUMP PIT W761588 To (89) EAST OF TANK II 41 W761580

Line No. RCZ 37

Actual Test Pressure: 380 PSIG Vacuum N/A Actual Length of Test 30 min.

Special Instructions: Ref. Safety Procedure No. 52 - T&I S.I. T&I 5

(Protection: Safety, Blank Offs, Etc.)

Acceptance Criteria: Test Pressure 375 PSIG Time (Minimum 15 min. or as req.) Vacuum N/A

Per Spec. 4482 P-Code 224A Dwg. N/A Teletype No. N/A Local Design N/A

Remarks

Gauge CDS No. 252 A Expires 1-88

Test Requested by C. D. SMITH (Div. Eng.) per J. H. RISHER (Area Eng.)

	Name	Title
Test Accepted by: Testing & Inspection	Joe Holland	QC
Craft Foreman	[illegible]	[illegible]
Operations*	[illegible]	WMP

Date 11-4-87

* Optional

INFORMATION ONLY
INFORMATION ONLY

ASR 2-98 (11/80)

Page 5 of 4A
#1) 6 #0 Tank 51

F-S-34-11C
Test Report #835

"Q" ☐	"S" ☑
Distribution:	
Project Records Center - Const	
Division Engineer	
T & I	
Pipe	

FILE ID #12800

Savannah River Plant
PRESSURE TEST REPORT

W743747
W761581
W761582
W761587
W761588
W814832
W814833

Project 1780 AMO 8-1047 N/A Area H Bldg. No. 241 Dwg.

Test Location: Shop N/A Field ✓ Service PROCESS WASTE LINE (CORE)

Fabrication: Pipe ✓ Tank N/A Equipment N/A Size 3" Material S/S

Type Test: Hydro ✓ Pneumatic N/A Halide N/A Vacuum N/A

Test Medium: Water ✓ Oil N/A Air N/A Freon & Nitrogen N/A Vacuum N/A

Location: From (A5) INSIDE EAST WALL OF AUXILIARY PUMP PIT W761588 To (B5) VALVE BOX Y351-15-1 EAST SIDE OF TANK #51 W743747

Line No. SF16054, SDP1

Actual Test Pressure: 382 PSIG Vacuum N/A Actual Length of Test 30 min.

Special Instructions: Ref. Safety Procedure No. 52 - T&I S.I. T&I 5

(Protection: Safety, Blank Offs, Etc.)

Acceptance Criteria: Test Pressure 375 PSIG Time (Minimum 15 min. or as req.) Vacuum N/A

Per Spec. 4482 P-Code 224A Dwg. N/A Teletype No. N/A Local Design N/A

Remarks TEST OK

Gauge CDS No. 252 A Expires 1-88

Test Requested by C. D. SMITH (Div. Eng.) per M.D. CRUMPTON (Area Eng.)

	Name	Title
Test Accepted by: Testing & Inspection	C. Skipper	Q.C.
Craft Foreman	Steve R Meador	
Operations*	Donna Owens	WMP

Date 11-4-87

* Optional

INFORMATION ONLY

INFORMATION ONLY

ASR 2-98 (11/80)

page 5 of 4A
#3) 5 to Tank 49

F-S-34-11C
Test Report #67C

Savannah River Plant
PRESSURE TEST REPORT

"Q" ☐ "S" ☑
Distribution:
Project Records Center - Constr.
Division Engineer
T & I
Pipe

FILE ID #12800

W 761581
W761582
W761587
W761588
W 814819
W 814833

Project 1780 AMO 8-1047 N/A Area H Bldg. No. 241 Dwg.

Test Location: Shop N/A Field ✓ Service PROCESS WASTE LINE (CORE)

Fabrication: Pipe ✓ Tank N/A Equipment N/A Size 3" Material S/S

Type Test: Hydro ✓ Pneumatic N/A Halide N/A Vacuum N/A

Test Medium: Water ✓ Oil N/A Air N/A Freon & Nitrogen N/A Vacuum N/A

Location: From (A5) INSIDE EAST WALL OF AUXILIAR PUMP PIT (PCP341) W761588 To (E2) ON SLOPE EAST OF TANK #49 (1253A) W814819

Line No. PCP341, 1253A

Actual Test Pressure: 382 PSIG Vacuum N/A Actual Length of Test 30 min.

Special Instructions: Ref. Safety Procedure No. 52 - T&I S.I. T&I 5
(Protection: Safety, Blank Offs, Etc.)

Acceptance Criteria: Test Pressure 375 PSIG Time (Minimum 15 min. or as req.) Vacuum N/A

Per Spec. 4482 P-Code 224A Dwg. N/A Teletype No. N/A Local Design N/A

Remarks TEST OK

Gauge CDS No. 252 A Expires 1-88

Test Requested by C. D. SMITH (Div. Eng.) per M. D. CRUMPTON (Area Eng.)

	Name	Title
Test Accepted by: Testing & Inspection	C. Skipper	Q.C.
Craft Foreman	Steve L Meador	[illegible]
Operations*	Donna Owens	[illegible]

Date 11-4-87
* Optional

INFORMATION ONLY

INFORMATION ONLY

PART IV-B DOCUMENTATION REVIEW CHECKLIST

Sheet 2 of ___

SECTION I

TOP (Segment)# 34.11C Task Team Inter-Area Date 10-27-89

Review of : ✓ Part IV-B Documentation

___ Part IV-B included in Part IV-A Documentation

SECTION II	Yes	If not, describe findings below	Action taken or planned	Action Approved	Action Completed
1. Individual operations (steps) signed on the same date or in sequential order, unless procedure specifies this as not being required.	No	Steps: 1A, 1D, 2b, 2d, Part II - 1b, 2B, 2b, 2d, 3b	no detrimental effects could occur by performing steps in sequence actually used	[illegible] 10/27/89 W. J. [illegible] 11-2-89	
2. Steps verifying completion of another document are signed on or after completion of that document?	Yes		NA		NA
3. Attachments listed in the procedure are attached?	Yes		NA		NA
4. All attached data sheets, reports, etc.:			NA		NA
a. are referenced in the procedure?	Yes				
b. have the correct equip. ID#?	Yes				
c. have all blanks completed or N/A'd?	Yes				
d. have acceptance criteria specified?	N/A				
e. have acceptable test results?	N/A				
5. M&TE utilized is identified?	N/A		NA		NA
6. Corrections lined thru, signed and dated?	N/A		NA		NA
7. Black ink utilized, data is legible and microfilmable?	Yes		NA		NA

8. Note other findings or concerns: — N/A —

Reviewed by Rodney T. Robinson Date 10-27-89

Reviewed by NA Date ___

Approved by [illegible] Date 11/6/89
T/T Leader

Approved by [illegible] Date 11/6/89
T/T Supervisor

Rev. 1

NOTE: Attach to Part IV-B reviewed as part Record.

105

Top(Segment)#_____

PART IV-B DOCUMENTATION REVIEW CHECKLIST

Continuation sheet

Sheet__of__

"INFORMATION ON [redacted]

Test Report No. [redacted]

F.S. 34.08B [redacted]

ASR 2-98 (11/80)

"Q" ☐	"S" ☑
Distribution:	
Project Records Center - Constr	
Division Engineer	
T & I	
Pipe	

FILE ID #12800

Savannah River Plant
PRESSURE TEST REPORT

W750290
W750287
W750289

Project 1780 AMO 8-1047 N/A Area S Bldg. No. 511 Dwg W750468

Test Location: Shop N/A Field ✓ Service LEAK DETECTION BOXES

Fabrication: Pipe ✓ Tank N/A Equipment N/A Size ½"-1"-1½"-2" Material C/S

Type Test: Hydro ✓ Pneumatic N/A Halide N/A Vacuum N/A

Test Medium: Water ✓ Oil N/A Air N/A Freon & Nitrogen N/A Vacuum N/A

Location: From Test Point ① W750287 To Test Point ② W750287 + W750468
W750289 + W750290

Line No. SEE BELOW

Actual Test Pressure: 129 PSIG Vacuum N/A Actual Length of Test 30 min.

Special Instructions: Ref. Safety Procedure No. 52 - T&I S.I. T&I 5

(Protection: Safety, Blank Offs, Etc.)

Acceptance Criteria: Test Pressure 125 PSIG Time (Minimum 15 min. or as req.) Vacuum N/A

Per Spec. 4482 P-Code 242 Dwg. N/A Teletype No. DP-000 1976 Local Design N/A

Remarks Tested PER TeLetype # DP-000 1976
NO LEAKAGE

Gauge CDS No. 596 Expires 10/86

Test Requested by D. ISMINGER per
Div. Eng. Area Eng.

	Name	Title
Test Accepted by: Testing & Inspection	[signature]	[signature]
Craft Foreman	[signature]	PIPE FOREMAN
Operations*		

Date 8-20-86

* Optional

NES [redacted] 135, 138, 141, 134, 73, 66, [redacted] 296, 297, 298, 299, 300, 304, 110, 111, 112, 113, 114,
LDX 303, 305, 306, 307, 302, 116, 309, 148, 67, 317, 308, 115, 301, 147, 65, 142, 143, 144, 145
PEN 1260 LDX 146, 60, 61, 62, 63, 64
Box # LDX 190, 130, 170, 160, 070

Test Report No. 100-A

ASR 2-98 (11/80)

34.08A

[redacted]

"Q" ☐ "S" ☑
Distribution:
Project Records Center · Cons
Division Engineer
T & I
Pipe

FILE ID #12800

Savannah River Plant
PRESSURE TEST REPORT

W 750 15
W 750 25

Project 1780 AMO 8-1047 N/A Area S Bldg. No. 511 Dwg. W750209

Test Location: Shop N/A Field ✓ Service Leak Detection Bores

Fabrication: Pipe ✓ Tank N/A Equipment N/A Size ½"-1"-1½"-2" Material C/S

Type Test: Hydro ✓ Pneumatic N/A Halide N/A Vacuum N/A

Test Medium: Water ✓ Oil N/A Air N/A Freon & Nitrogen N/A Vacuum N/A

Location: From Test Point ① W750209 To Test Point ② W750209 - W75015
W75025

Line No. SEE below

Actual Test Pressure: 129 PSIG Vacuum N/A Actual Length of Test 30 min

Special Instructions: Ref. Safety Procedure No. 52 - T&I S.I. T&I 5

(Protection: Safety, Blank Offs, Etc.)

Acceptance Criteria: Test Pressure 125 PSIG Time (Minimum 15 min. or as req.) Vacuum N/A

Per Spec. 4482 P-Code 242 Dwg. N/A Teletype No. DP-0001976 Local Design N/A

Remarks Tested Per Teletype # DP-0001976
No Leakage

Gauge CDS No. 596 Expires 10-86

Test Requested by D. ISMINGER per
Div. Eng. Area Eng.

	Name	Title
Test Accepted by: Testing & Inspection	[signature]	T&I
Craft Foreman	[signature]	Pipe Foreman
Operations*		

Date 8-19-86

* Optional

LINES LDX 117, 118, 119, 120, 121, 169, 168, [redacted] 75, 4, 36, 37, 38, 39, 40, 41, 33
LDX 310, 311, 312, 313, 314, 316, 319, 122, 41, 315
PEN 986
Box # LDX 120, 050, 180

N

Test Report No. 100-H
(FS.34.08B)
[redacted] 34 [redacted]

ASR 2-98 (11/80)

"Q" ☐ "S" ☑
Distribution:
Project Records Center - Constr
Division Engineer
T & I
Pipe

FILE ID #12800

Savannah River Plant
PRESSURE TEST REPORT

W750290
W750287
W750289
W750468

Project 1780 AMO 8-1047 N/A Area S Bldg. No. 511 Dwg W750468

Test Location: Shop N/A Field ✓ Service Leak Detection Boxes

Fabrication: Pipe ✓ Tank N/A Equipment N/A Size ½"-1"-1½"-2" Material C/S

Type Test: Hydro ✓ Pneumatic N/A Halide N/A Vacuum N/A

Test Medium: Water ✓ Oil N/A Air N/A Freon & Nitrogen N/A Vacuum N/A

Location: From Test Point ① W750287 To Test Point ② W750287 + W750468 W750289 + W750290

Line No. SEE below

Actual Test Pressure: 129 PSIG Vacuum N/A Actual Length of Test 30 min.

Special Instructions: Ref. Safety Procedure No. 52 - T&I S.I. T&I 5

(Protection: Safety, Blank Offs, Etc.)

Acceptance Criteria: Test Pressure 125 PSIG Time (Minimum 15 min. or as req.) Vacuum N/A

Per Spec. 4482 P-Code 242 Dwg. N/A Teletype No. DP-000 1976 Local Design N/A

Remarks Tested Per Teletype # DP-000 1976
No Leakage

Gauge CDS No. 596 Expires 10/86

Test Requested by D. Isminger (Div. Eng.) per _____ (Area Eng.)

	Name	Title
Test Accepted by: Testing & Inspection	[signature]	Tech
Craft Foreman	[signature]	Pipe Foreman
Operations*		

Date 8-20-86

* Optional

L ES [redacted]35, 138, [redacted]73, 66, 79, 74, 95, 296, 297, 298, 299, 300, 304, 110, 111, 112, 113, 114, LDX 303, 305, 306, 307, 302, 116, 309, 148, 67, 317, 308, 115, 301, 147, 65, 142, 143, 144, 145 LDX 146, 60, 61, 62, 63, 64
Pen 1260
Box # LDX 190, 130, 170, 160, 070

ASR 2-98 (11/80)

FS. 34.08B, 34.11D, 34.11C
IR. 41-0229-88-02 34.11C

"Q" ☐ "S" ☑
Distribution:
Project Records Center - Constr.
Division Engineer
T & I
Pipe

FILE ID #12800

Savannah River Plant
PRESSURE TEST REPORT

Project 1780 AMO 8-1047 N/a Area -5- Bldg. No. AUX PIT Dwg. W750290

Test Location: Shop N/a Field ✓ Service PEN NOZZELES

Fabrication: Pipe ✓ Tank N/a Equipment N/A Size 3" Material S/S

Type Test: Hydro N/A Pneumatic ✓ Halide N/a Vacuum N/a

Test Medium: Water N/a Oil N/a Air ✓ Freon & Nitrogen N/a Vacuum N/a

Location: From (1) W750290 To (2) W750290

Line No. NOZZELES 2, 3, 4, 5, 6, 7, ON PENS 909, 911, 983, 916, 918, 967

Actual Test Pressure: 21 psi Vacuum N/a Actual Length of Test 30 min.

Special Instructions: Ref. Safety Procedure No. 52 - T&I S.I. T&I 5

(Protection: Safety, Blank Offs. Etc.)

Acceptance Criteria: Test Pressure 20 psi +-5 Time (Minimum 15 min. or as req.) Vacuum N/a

Per Spec. 4482 P-Code P22-4 Dwg. N/a Teletype No. N/a Local Design N/a

Remarks TEST

Gauge CDS No. 150 A Expires 7-88

Test Requested by _____ (Div. Eng.) per EJ BRAUN (Area Eng.)

	Name	Title
Test Accepted by: Testing & Inspection	John R. Lindsey	MK QC
Craft Foreman	R. J. Hafner Co	FOREMAN
Operations*		

Date 2-29-88

* Optional

"Q" ☐ "NON-Q" ☐
Distribution:
Project Records Center - Constr.

FINAL WALKDOWN CHECKLIST

MK-FERGUSON

PROJECT 5120

QP 14.2 Rev.

QA ACCEPTANCE

FWVT

ITEM No.	ACC	REJ	REMARKS
FACILITY SEGMENT: 34.11C			
VERIFY THAT ASSOCIATED ITEMS HAVE PROPER IDENTIFICATION TAGS/LABELS ATTACHED AND THE HANGER SPAN IS IN ACCORDANCE WITH DESIGN REQUIREMENTS IN ADDITION TO THE APPLICABLE REQUIREMENTS OF QP-14.2 LATEST REVISION.			
ATTACHED ARE THE LATEST DESIGN REVISION OF THE P & ID's TO BE USED IN CONJUNCTION WITH THE CHECKLIST. IF A REJECTABLE ITEM IS FOUND, CIRCLE THAT ITEM ON THE ATTACHED P & ID AND ASSIGN A SEQUENTIAL NUMBER TO THAT ITEM THEN LIST THE ITEM # ON CHECKLIST INDICATE REJECT AND GIVE THE DESCRIPTION OF THE DEFICIENCY WITH THE ASSIGNED # IN REMARKS.			
NOTE: IF AN ITEM IS INACCESSIBLE, INDICATE THIS ON DRAWING AND GIVE REASON FOR INACCESSIBILITY.			

page 1 of 7

T/O SEG. NO. 34.11C

IR NO- 41-102088-01

QC FINAL ACCEPTANCE

LOCI REVIEW

10-21-88

INFORMATION ONLY

F-572 REV 2 (3-88)

ASR 15-181 (3-88) ID 26095

File Code No. 2.1.8.5

Turnover Package No. 34.11E
PAGE 1 of 11
REVISION 0

2nd Folder 1

"...TION ONLY"

ORIGIN

DEFENSE WASTE PROCESSING FACILITY

PART IV-A PROCEDURE

CHECKOUT OF THE INTERAREA TRANSFER LINES BETWEEN THE LOW POINT PUMP PIT AND VIT. BLDG.

APPROVALS:

PROCEDURE PREPARED BY:	R. H. Williams R. H. WILLIAMS	9/08/87 DATE
TASK TEAM APPROVAL:	K. O. Darden TASK TEAM LEADER	10/20/87 DATE
	[signature] TASK TEAM SUPERVISOR	10/22/87 DATE
PROCEDURE COMPLETED BY:	J. A. Brooks Michael W. Lewis TASK TEAM LEADER	1/17/89 1/17/89 DATE
COMPLETION APPROVAL:	Will T. Davis TASK TEAM SUPERVISOR	1-18-89 DATE
FILED BY:	Denise Keenan STARTUP LIAISON FILE CLERK	1/19/89 DATE

DISTRIBUTION:

Task Team Leader, (2 copies) - K. O. Darden, 704-11S
AES Design Engineer - P. A. Morse, Louviers, L4119
J. W. McKibben, TC-S1
Startup Liaison Master File, 704-8S

SCOPE: This procedure details the commissioning plans and requirements for the Interarea Transfer Lines - Between the LPPP and Vitrification Bldg.and piping detailed in Part II Turnover Package 34.11E.

GENERAL: The Interarea Transfer Lines - Between the LPPP and Vitrification Bldg. will be commissioned by the Task Team.

This Part IV-A procedure will be completed by the Task Team in accordance with the Construction Quality Verification Plan. All verification steps required by this procedure are over and above those required by the Construction Quality Verification Checklists and are required by the contract, and/or the SRC QA Plan, and/or specific Project related documentation.

The verifications in this procedure are performed by reviewing the appropriate quality verification documentation and recording its document number. If any reviewed document does not have an identifying number, it must be copied and the copy attached to this procedure.

SAFETY: Comply with Plant and/or Construction Safety Rules, whichever is more stringent. The following Safety Manual Items (SMI) apply to this turnover package:

Safety Manual Item 103 - Safety Rules for Operations personnel in the vicinity of Construction Division Work.

Safety Manual Item 24 - Barricades.

Q-ITEMS: There are no "Q" construction or "Q" checking requirements for this turnover package.

WITNESS POINTS: This Part IV-A procedure does not contain any Witness Points which require the QV Checker to schedule a visual inspection of the area or facility in question in conjunction with the continuation of construction. Any Witness Points that might arise should be scheduled so that they do not interrupt construction activities. Missing a Witness Point at its prescribed time will eliminate the opportunity to make the check.

REFERENCES: The following references were used to prepare this Part IV-A procedure.

Project Specifications:

C-18, Rev. 6	Installation of Utility Piping.
C-19, Rev.6	Trenching and Backfilling.
P-01, Rev.15	Project Product and Service Index
P-11, Rev.6	Furnishing and Installing Process and Service Piping
S-20, Rev.3	Furn., Fabr. & Deliv. of Structural Steel
S-22, Rev.5	Furn., Fabr. & Deliv. of Misc. Steel
Du Pont Site Spec. 7196	Thermal Insulation
Du Pont Site Spec 7797	Corrosion Protection for Underground Piping

Project Documents: Letter, M. N. Borders to F. G. Gatlin, et al, 12/10/86, Rev. 1 (PC-0000277)

Drawings:

W750040, Rev.#11	Low Pt. Precipitate Tank (Sht 1 of 2) Piping and Instrument Diagram
W750135, Rev.#7	Low Pt. Leak Detect Boxes (Sht 1 of 2) Piping
W750136, Rev.#10	Low Pt. Sludge Tank (Sht 1 of 2) Piping and Instrument Diagram
W750137, Rev.#9	Low Pt. Recycle Waste Tank (Sht. 1 of 2) Piping and Instrument Diagram
W750259, Rev.#3	Vitrif/Interarea Process Lines Piping and Instrument Diagram

Checklists:

221.S.F02	Vitrification Bldg. Base Slab # 10 and Slab #11
511.S.107	LPPP Foundation Wall, LPW-001-268
511.S.108	LPPP Foundation Wall, LPW-002-268
511.S.109	LPPP Foundation Wall, LPW-003-268
511.S.123	LPPP - Outside Undergriund Piping DA 511
550.S.400	Interarea Pipeline DA 550
TOP 34.11E	Interarea Transfer Lines -Low Point Pump Pit To Vitrification Bldg.

	DATE	SIGNATURE

SECTION 1.0 - VERIFICATION REQUIREMENTS

The following steps are verifications that all activities by the Interarea Task Team and verifications of work performed by other Task/Resource Teams have been completed prior to the Preliminary Acceptance Inspection (PAI).

1.1) Review the following Checklists to verify they have been completed and signed off on each section:

Checklist No.	Title		
221.S.F02	Vitrification Bldg. Base Slab #10 and Slab #11	12-1-88	RHWilliams
511.S.107	LPPP Foundation Wall LPW-001-268	10-29-87	RHWilliams
511.S.108	LPPP Foundation Wall LPW-002-268	10-29-87	RHWilliams
511.S.109	LPPP Foundation Wall LPW-003-268	10-29-87	RHWilliams
511.S.123	LPPP - Outside Underground Piping DA 511	10-29-87	RHWilliams
550.S.400	Interarea Pipeline DA 550	10-21-88	RHWilliams
TOP 34.11E	Interarea Transfer Lines - Between Low Pt. Pump Pit and Vit. Bldg.	1-14-88	RHWilliams

	DATE	SIGNATURE

Information: Pipe Hydrostatic Testing - Construction is required to hydrostatically test all lines in accordance with the requirements listed in Project Specification P-01. The piping in this facility segment is designated.

Review the QV documentation to verify the hydrostatic testing of the following 12 pipes:

1. Line No.: SDP 25 (Core)

   Location: LPPP Sludge Cell East Wall Nozzle #5 to 221-S in Canyon Nozzle #304(8).
   Test Pressure: 375 lbs.
   QV Doc. No.: ASR 2-98 (11/80) (T&I) - See Addendum #6 — 10-29-87 — RHWilliams

2. Line No.: SDP 24 (Core)

   Location: LPPP Sludge East Cell Wall Nozzle #4 to 221-S in Canyon Nozzle #301(9).
   Test Pressure: 375 lbs.
   QV Doc. No.: ASR 2-98 (11/80) (T&I) - See Addendum #1 — 10-29-87 — RHWilliams

3. Line No.: PCP 9 (Core)

   Location: LPPP Precipitate East Cell Wall Nozzle #4 to 221-S in Canyon Nozzle #301(16).
   Test Pressure: 375 lbs.
   QV Doc. No.: ASR 2-98 (11/80) (T&I) - See Addendum #2 — 10-29-87 — RHWilliams

4. Line No.: RCZ 4 (Core)

   Location: LPPP Recycle Cell East Cell Wall Nozzle #4 to 221-S in Canyon Nozzle #303(8).
   Test Pressure: 375 lbs.
   QV Doc. No.: ASR 2-98 (11/80) (T&I) - See Addendum #3 — 10-29-87 — RHWilliams

	DATE	SIGNATURE
5. Line No.: RCZ Pen 27 (Spare Core) Location: 221-S Bldg. Outside Wall to Nozzle #301(8) in Chemical Process Cell (221-S Canyon) Test Pressure: 375 lbs. QV Doc. No.: ASR 15-64 (12/85) (T&I) Test #4 + 132	10-29-87	RHWilliams
6. Line No.: SDP Pen 161 (Spare Core) Location: 221-S Bldg. Outside Wall to Nozzle #302(8) in Chemical Process Cell (221-S Canyon). Test Pressure: 375 lbs. QV Doc. No.: ASR 15-64 (12/85) (T&I) - Test # 1165	10-29-87	RHWilliams
7. Line No.: SDP Pen 164 (Spare Core) Location: 221-S Bldg. Outside Wall to Nozzle #302(9) in Chemical Process Cell (221-S Canyon). Test Pressure: 375 lbs. QV Doc. No.: ASR 15-64 (12/85) (T&I) - Test #1150	10-29-87	RHWilliams
8. Line No.: PCP Pen 169 (Spare Core) Location: 221-S Bldg. Outside Wall to Nozzle #302(15) in Salt Process Cell (221-S Canyon). Test Pressure: 375 lbs. QV Doc. No.: ASR 15-64 (12/85) (T&I) - Test # 186	10-29-87	RHWilliams
9. Line No.: PCP Pen 170 (Spare Core) Location: 221-S Bldg. Outside Wall to Nozzle #302(14) in Salt Process Cell (221-S Canyon). Test Pressure: 375 lbs. QV Doc. No.: ASR 15-64 (12/85) (T&I) - Test # 191	10-29-87	RHWilliams
10. Line No.: PCP Pen 171 (Spare Core) Location: 221-S Bldg. Outside Wall to Nozzle #301(14) in Salt Process Cell (221-S Canyon). Test Pressure: 375 lbs. QV Doc. No.: ASR 15-64 (12/85) (T&I) Test Nos 192, +17	10-29-87	RHWilliams

	DATE	SIGNATURE
11. Line No.: RCZ Jacket Location: LPPP Recycle Cell East Wall Nozzle #4 to 221-S in Canyon Nozzle #303(8).(Note: Includes Pen 763 Vent) Test Pressure: 125 lbs. QV Doc. No.: ASR 2-98 (11/80) (T&I) - See Addendum #4	10-29-87	RHWilliams
12. Line No.: PCP Jacket Location: LPPP Precipitate Cell East Wall Nozzle #4 to 221-S in Canyon Nozzle #301(16).(Note: Includes Pen 771 Vent) Test Pressure: 125 lbs. QV Doc. No.: ASR 2-98 (11/80) (T&I) - See Addendum #4	10-29-87	RHWilliams
13. Line No.: Sludge Jacket Location: LPPP Sludge Cell East Wall Nozzle #5 to 221-S in Canyon Nozzle #304(8).(Note: Includes Pen 766 Vent) Test Pressure: 125 lbs. QV Doc. No.: ASR 2-98 (11/80) (T&I) - See Addendum #5	10-29-87	RHWilliams
14. Line No.: Sludge Jacket Location: LPPP Sludge Cell East Wall Nozzle #4 to 221-S in Canyon Nozzle #301(9).(Note: Includes Pen 767 Vent) Test Pressure: 125 lbs. QV Doc. No.: ASR 2-98 (11/80) (T&I) - See Addendum #5	10-29-87	RHWilliams
15. Line No.: PCP Jacket (Spare) Location: 221-S Bldg. Outside Wall to Nozzle #301(14) in Salt Process Cell (221-S Canyon).(Note: Includes Pen 768 Vent Line) Test Pressure: 125 lbs. QV Doc. No.: ASR 15-64 (12/85) (T&I) - TEST # 1296	10-29-87	RHWilliams

	DATE	SIGNATURE
16. Line No.: PCP Jacket (Spare) Location: 221-S Bldg. Outside Wall to Nozzle #302(14) in Salt Process Cell (221-S Canyon).(Note: Includes Pen 769 Vent Line) Test Pressure: 125 lbs. QV Doc. No.: ASR 15-64 (12/85) (T+I) - TEST # 1295	10-29-87	RHWeller
17. Line No: PCP Jacket (Spare) Location: 221-S Bldg. Outside Wall to Nozzle #302(15) in Salt Process Cell (221-S Canyon).(Note: Includes Pen 770 Vent Line) Test Pressure: 125 lbs. QV Doc. No.: ASR 15-64 (12/85) (T+I). TEST # 1294	10-29-87	RHWeller
18. Line No.: RCZ Jacket (Spare) Location: 221-S Bldg. Outside Wall to Nozzle #301(8) in Chemical Process Cell (221-S Canyon).(Note: Includes Pen 762 Vent Line) Test Pressure: 125 lbs. QV Doc. No.: ASR 15-64 (12/85) (T+I) TEST Nos. 15, 1300, 176, 520	10-29-87	RHWeller
19. Line No: Sludge Jacket (Spare) # 1300 Location: 221-S Bldg. Outside Wall to Nozzle #302(8) in Salt Process Cell (221-S Canyon).(Note: Includes Pen 764 Vent Line) Test Pressure: 125 lbs. QV Doc. No.: ASR 15-64 (1/85) (T+I) TEST Nos. 175, 7, 1456, #521	10-29-87	RHWeller
20. Line No.: Sludge Jacket (Spare) Location: 221-S Bldg. Outside Wall to Nozzle #302(9) in Chemical Process Cell (221-S Canyon).(Note: Includes Pen 765 Vent Line) Test Pressure: 125 lbs. QV Doc. No.: ASR 15-64 (12/85) (T+I) TEST #1298, 526	10-29-87	RHWeller

	DATE	SIGNATURE
21. Line No.: LDX 44 P242 - 1		
Test Pressure: 375 lbs. QV Doc. No.: ASR 2-98 (11/80) (T:I) TRANSMITTAL DOC #S-1757	10-30-87	RHWeller
22. Line No.: LDX 68 P242 - 1		
Test Pressure: 375 lbs. QV Doc. No.: ASR 2-98 (11/80) (T:I) TRANSMITTAL DOC. #S-1757	10-30-87	RHWeller
23. Line No.: LDX 127 P242 - 1		
Test Pressure: 375 lbs. QV Doc. No.: ASR 2-98 (11/80) (T:I) TRANSMITTAL DOC. #S-1757	10-30-87	RHWeller
24. Line No.: LDX 166 P242 - 1		
Test Pressure: 375 lbs. QV Doc. No.: ASR 2-98 (11/80) (T:I) TRANSMITTAL DOC. #S-1757	10-30-87	RHWeller

DATE SIGNATURE

SECTION 2.0 - COMMISSIONING ACTIVITY OUTLINE

The following section is divided into two parts. The first part describes any verifications that are required by the Task Team that were not covered by the Construction Quality Verification Checklists. The second part is an outline of the actual commissioning activities that will be performed by the Task Team.

Information: The following verification steps are required prior to commissioning:

2.1) Verify that Motor Control Center MCC B202 (TOP 2.04K) has been accepted for turnover by the Electrical Task Team.

2-8-88 RHWeller

Verify that the LPPP Precipitate Tank (TOP 34.03B) has been accepted for turnover by the Task Team.

1/17/89 WR Jones

Verify that the LPPP Recycle Tank (TOP 34.03C) has been accepted for turnover by the Task Team.

1/17/89 WR Jones

Verify that the LPPP Sludge Tank (TOP 34.03A) has been accepted for turnover by the Task Team.

1/17/89 WR Jones

Verify that the LPPP to the 221-STransfer Line (TOP 34.11E) has been accepted for turnover by the Task Team.

1-14-88 RHWeller

Information: The following is an outline that will be performed by the appropriate Task Teams. Special procedures (Part IV-B) will be written to accomplish these steps.

2.2) Perform run-in of the SDP 25 (core) pipe line from the LPPP Sludge Cell Nozzle.#5 to 221-S in Canyon Nozzle #304 (8).

Perform run-in of the SDP 24 (core) pipe line from the LPPP Sludge Cell Nozzle #4 to 221-S in Canyon Nozzle #301 (9).

Perform run-in of the PCP 9 (core) pipe line from the LPPP Precipitate Cell Nozzle #4 to 221-S in Canyon Nozzle #301 (16).

Perform run-in of the RCZ 4 (core) pipe line from the LPPP Recycle Cell Nozzle #4 to 221-S in Canyon Nozzle #303 (8).

File Code No. 2.1.8.5

"INFORMATION ONLY"

ORIGINAL

DEFENSE WASTE PROCESSING FACILITY

PART IV-B PROCEDURE

RUN-IN OF THE INTERAREA TRANSFER LINES FROM THE LOW POINT PUMP PIT TO THE VIT. BLDG.

APPROVALS:

PROCEDURE PREPARED BY:	C. O. Williams C. O. WILLIAMS	2/18/88 DATE
TASK TEAM APPROVAL:	K. O. Darden TASK TEAM LEADER	2/18/88 DATE
	J R [illegible] TASK TEAM SUPERVISOR	2-20-88 DATE
PROCEDURE COMPLETED BY:	Michael [illegible] TASK TEAM LEADER	3/15/89 DATE
COMPLETION APPROVAL:	Will T. Davis TASK TEAM SUPERVISOR	3/15/89 DATE
FILED BY:	Denise Keeran STARTUP LIAISON FILE CLERK	3/23/89 DATE

DISTRIBUTION:

Task Team Leader, (2 copies) - K. O. Darden, 704-11S
Du Pont Construction Field Engineer: J. K. Blakenship, SAAB
AES Design Engineer P. A. Morse, Louviers, 4123
Task Team File Clerk Marcelle Michael, 704-11S
Document Distribution Center D. M. McCorkle, TC-S1, Box 7
Central Files, 703-A

SCOPE: This procedure covers the run-in of the Interarea Transfer Lines from the Low Point Pump Pit to the Vitrification Bldg. as detailed in the Part II turnover package and Part IV A procedure 34.11E.

SAFETY: Comply with plant and /or Construction Safety Rules, whichever is more stringent. The following Safety Manual Items (SMI) apply to this turnover package:

Safety Manual Item 103	Safety Rules for Operations personnel in the vicinity of Construction Division Work.
Safety Manual Item 24	Barricades.
Safety Manual Item 32	Work Clearance Permits
Safety Manual Item 22	Locking, Tagging and Trying.

REFERENCES: The following references were used to prepare this Part IV-B procedure.

Project Specifications:

C-19, Rev.6	Trenching and Backfilling.
P-01, Rev.15	Project Product and Service Index
P-11, Rev.6	Furnishing and Installing Process and Service Piping
Du Pont Site Spec 7797	Corrosion Protection for Underground Piping
TOPS 34.11E	Part II Turnover Package
TOPS 34.03a	LPPP Sludge Tank and Sump
TOPS 34.03b	LPPP Precipitate Tk & Sump
TOPS 34.03c	LPPP Recycle Tank and Sump

			DATE	SIGNATURE
Drawings:	W750040, Rev.#11	Low Pt. Precipitate Tank (Sht 1 of 2) Piping and Instrument Diagram		
	W750135, Rev.#7	Low Pt. Leak Detect Boxes (Sht 1 of 2) Piping		
	W750136, Rev.#10	Low Pt. Sludge Tank (Sht 1 of 2) Piping and Instrument Diagram		
	W750137, Rev.#9	Low Pt. Recycle Waste Tank (Sht. 1 of 2) Piping and Instrument Diagram		
	W750259, Rev.#3	Vitrif/Intearea Process Lines Piping and Instrument Diagram		

Prior to final testing any of the Transfer lines described in this procedure verify that the following TOPS have been completed and all instruments are operational.

TOPS 34.03a	3-9-89	RD Templar
TOPS 34.03b	3-9-89	RD Templar
TOPS 34.03c	3-9-89	RD Templar

DATE SIGNATURE

GENERAL INFORMATION:

This Procedure along with a written Job Plan will be used to Run-in the Interarea Transfer Line between the Vitrification building and the Low Point Pump Pit.

RUN-IN PROCEDURE

1. Run-in of SDP 25 (3" SST Core Pipe)

A. Verify that Leak Detection Box No. 10 at the Low Point Pump Pit is dry.

3-9-89 RD Temples

B. Introduce liquid into Nozzle #304 (Module 8) on the West wall of the Chemical Process Cell, in the 221-S Bldg.

1-30-88 W.H. Inabnit

C. Verify that the liquid exits Nozzle #5 on the East wall of Low Point Pump Pit, Sludge Cell (#1).

1-30-88 W.H. Inabnit

D. Verify that Leak Detection Box No. 10 at the Low Point Pump Pit is dry.

3-9-89 RD Temples

2. Run-in of SDP 24 (3" SST Core Pipe)

A. Verify that Leak Detection Box No. 10 at the Low Point Pump Pit is dry.

3-9-89 RD Temples

B. Introduce liquid into Nozzle #301 (Module 9) on the West wall of the Chemical Process Cell, in the 221-S Bldg.

2-2-88 W.H. Inabnit

C. Verify that the liquid exits Nozzle #4 on the East wall of the Low Point Pump Pit, Sludge Cell (#1).

2-2-88 W.H. Inabnit

D. Verify that Leak Detection Box No. 10 at the Low Point Pump Pit is dry.

3-9-89 RD Temples

3

	DATE	SIGNATURE

3. Run-in of PCP 9 (3" Core Pipe)

A. Verify that Leak Detection Box No. 40 at the Low Point Pump Pit is dry.

3-9-89 RD Templa

B. Introduce liquid into Nozzle #301 (Module 16) on the West wall of the Salt Process Cell in the 221-S Bldg.

2-5-88 [illegible]

C. Verify that the liquid exits Nozzle #4 on the East wall of the Low Point Pump Pit, Precipitate Cell (#3). No visible trash during flushing of line. Water clear.

2-5-88 RHWilles

D. Verify that Leak Detection Box No. 40 at the Low Point Pump Pit is dry.

3-9-89 RD Templa

4. Run-in of the RCZ 4 (3" SST Core Pipe)

A. Verify that Leak Detection Box No. 40 at the Low Point Pump Pit is dry.

3-9-89 RD Templa

B. Introduce liquid into Nozzle #303 (Module 8) n the West wall of the Chemical Process Cell, in the 221-S Bldg.

1-30-88 [illegible]

C. Verify that the liquid exits Nozzle #4 on the East wall of the Low Point Pump Pit, Recycle Cell (#2).
The first thing I saw came out looked to be leaves then water

1-30-88 [illegible]

D. Verify that Leak Detection Box No. 40 at the Low Point Pump Pit is dry.

3-9-89 RD Templa

3-9-89 RD Templa

PART IV-B DOCUMENTATION REVIEW CHECKLIST

SECTION I

Sheet 2 of ___

TOP (Segment)# 34.11e Task Team Inter Area Date 10-27-89

Review of : ✓ Part IV-B Documentation

___ Part IV-B included in Part IV-A Documentation

SECTION II

	Yes	If not, describe finding below	Action taken or planned	Action Approved	Action Completed
1. Individual operations (steps) signed on the same date or in sequential order, unless procedure specifies this as not being required.	No	Steps 1b, 1D, 2b, 2d, 3b, 3d 4b, 4d Are out of order.	No detrimental effects could occur by performing steps in sequence actually used	[illegible] 10/27/89 W.J. Elliott 11-2-89	N.A.
2. Steps verifying completion of another document are signed on or after completion of that document?	Yes		NA		NA
3. Attachments listed in the procedure are attached?	N/A	Not ~~[illegible]~~ Listed. RCR 10/27/89	NA		NA
4. All attached data sheets, reports, etc.:					
a. are referenced in the procedure?	N/A	None Listed	NA		NA
b. have the correct equip. ID#?	N/A				
c. have all blanks completed or N/A'd?	N/A				
d. have acceptance criteria specified?	N/A				
e. have acceptable test results?	N/A				
5. M&TE utilized is identified?	N/A		NA		NA
6. Corrections lined thru, signed and dated?	Yes		NA		NA
7. Black ink utilized, data is legible and microfilmable?	Yes		NA		NA

8. Note other findings or concerns: — NA —

Reviewed by Rodney C. Robinson Date 10-27-89 Approved by [illegible] Date 11/6/89
T/T Leader

Reviewed by NA Date ___ Approved by R C Miller Date 11/8/89
T/T Supervisor

Rev. [illegible]

NOTE: Attach to Part IV-B review as part [illegible] record.

4

Top(Segment)#_____

Sheet__of__

PART IV-B DOCUMENTATION REVIEW CHECKLIST

Continuation sheet

INFORMATION ONLY

QA PRELIMINARY

Page 1 of 6 FIN

MK-FERGUSON
A MORRISON KNUDSEN COMPANY

HYDRO / PNEUMATIC TEST RECORD

Report No. 21-110289-02
Test Date 11-2-89
Procedure No. MKCP 600 R/1C

PROJECT / AMO 1780 WRL 11-1-89 DA S550 AREA /BLDG. No. 221S / DSUG

DWG. / REV. PCP9AG-1 / ~~PCP9AG-1~~ / PCP9AC-3 / PCP9AB-2 / PCP9AAA-1
PCP9AD-3

Type Test: ☐ Hydro ☒ Pneumatic ☐ Halide ☐ Vacuum ☐ Helium

P.P. 71Ø PRT 1 of 1

Test Medium: ☐ Water ☐ Oil ☐ Air ☒ ~~Freon~~ & Nitrogen ☐ Helium

Test Boundaries: SEE REMARKS BELOW

FIS 34.11e

ACCEPTANCE CRITERIA:

Required Time ☐ 10 minutes 30 MINUTES

Required Test Pressure 20 PSI

Other: NA

Per P-Code P224A

Other: NA

Pre-Hydro Walkdown complete W.L. [signature] Date: 11-1-89

Quality Pre-Hydro Walkdown complete Mike Davis Date: 11-2-89

Actual Test Pressure 21 PSI

Actual Length of Test 30 min.

M. & T. E.:
CDS No. 305 A 6-7-89

Re-Cal Due Date 12/89

Test Results: ☒ Acceptable ☐ Unacceptable

REMARKS:

BUBBLE LEAK TEST OF CORE WELDS AS LISTED

WRL ~~PR~~ 11-1-89 PCP9AD REV.3 FW1

PCP9AAA REV.1 FW1 & SW1

INFORMATION ONLY

NO LEAKAGE FOUND WITH THE BUBBLE LEAK TEST

JMDT 11-2-89

PCP AG, AD, AB, AC, AAA

DMF 11-8-89

Mike Davis II 11-2-89 [signature] 11-3-89

QC Acceptance Date Reviewed By Date

ASR 15-64 (6-88) Rev 5 ID 26033

RECEIVED NOV 10 1989

F-127 Rev 6 (6-88)

Page 1 of 6

"Q" "S" Distribution

QA PKG # 67-A3

MK-FERGUSON
A MORRISON KNUDSEN COMPANY

HYDRO / PNEUMATIC TEST RECORD

Report No. 21-110289-05
Test Date 11-2-87
Procedure No. MKCP 600 R/C

PROJECT / AMO 1780 DA 5550 AREA /BLDG. No. 2215/DSUG

DWG. / REV. PCP9AG-1/PCP9AD-3/PCP9AC-3/PCP9AB-2/PCP9AAA-1

Type Test: ☒ Hydro ☐ Pneumatic ☐ Halide ☐ Vacuum ☐ Helium P.P.71 Ø PRT 2 OF 2

Test Meduim: ☒ Water ☐ Oil ☐ Air ☐ Freon & Nitrogen ☐ Helium FIS 34.11e

Test Boundaries: SEE REMARKS BELOW

ACCEPTANCE CRITERIA: Required Test Pressure 375 PSI

Required Time ☒ 10 minutes NA Other: NA

Per P-Code P224A Other: NA

Pre-Hydro Walkdown complete W R Lamb Date: 11-1-89

Quality Pre-Hydro Walkdown complete Mike Davis II Date: 11-2-89

Actual Test Pressure 375 PSI Actual Length of Test 12 min.

M. & T. E.: CDS No. 479-A CAL 10-26-89 Re-Cal Due Date 11-26-89

Test Results: ☒ Acceptable ☐ Unacceptable

REMARKS:

HYDRO TEST OF CORE WELDS AS LISTED
PCP 9AD REV.3 FW1
PCP 9AAA REV.1 FW1 & SW1

Test between Points 1 and 2 with no
Visible Leakage JMD II 11-2-89

PCP 9AG, AD, AC, AB, AAA
DW 11-8-89

INFORMATION ONLY

Mike Davis II 11-2-89 R Brown III 11-38

QC Acceptance Date Reviewed By Date

ASR 15-64 (6-88) Rev 5 ID 26033 F-127 Rev 6 (6-88)

RECEIVED NOV 10 1989

"Q" "S" Distribution

MK-FERGUSON

HYDRO / PNEUMATIC TEST RECORD

Report No. 21-110289-05
Test Date 11-2-87
Procedure No. MKCP 600 R/C

ROJECT / AMO 1780 DA 5550 AREA /BLDG. No. 2215/DSUG

DWG. / REV. PCP9AG-1/PCP9AD-3/PCP9AC-3/PCP9AB-2/PCP9AAA-1

P.P.71 Ø PRT 2 of 2

Type Test: ☒ Hydro ☐ Pneumatic ☐ Halide ☐ Vacuum ☐ Helium

Test Meduim: ☒ Water ☐ Oil ☐ Air ☐ Freon & Nitrogen ☐ Helium FIS 34.11e

Test Boundaries: SEE REMARKS BELOW

ACCEPTANCE CRITERIA:

Required Test Pressure 375 PSI

Required Time ☒ 10 minutes NA Other: NA

Per P-Code P224A Other: NA

Pre-Hydro Walkdown complete W R Land Date: 11-1-89

Quality Pre-Hydro Walkdown complete Mike Davis II Date: 11-2-89

Actual Test Pressure 375 PSI Actual Length of Test 12 min.

M. & T. E.: CDS No. 479-A CAL 10-26-89 Re-Cal Due Date 11-26-89

Test Results: ☒ Acceptable ☐ Unacceptable

REMARKS:

HYDRO TEST OF CORE WELDS AS LISTED
PCP 9AD REV.3 FW1
PCP 9AAA REV.1 FW1 & SW1

Test between Points 1 and 2 with no Visible Leakage JMD II 11-2-89

PCP 9AG, AD, AC, AB, AAA
DW 11-8-89

INFORMATION ONLY

Mike Davis II 11-2-89
QC Acceptance Date

R Brown III 11-3-8
Reviewed By Date

F-127 Rev 6 (6-88)

ASR 15-64 (6-88) Rev 5 ID 26033

RECEIVED NOV 10 1989

"Q"	"S"
Distribution	

MK-FERGUSON

HYDRO / PNEUMATIC TEST RECORD

Report No. 21-110289-05
Test Date 11-2-87
Procedure No. MKCP 600 R/C

PROJECT / AMO 1780 DA 5550 AREA /BLDG. No. 2215/DSUG

DWG. / REV. PCP9AG-1/PCP9AD-3/PCP9AC-3/PCP9AB-2/PCP9AAA-1

P.P.71 Ø PRT 2 of 2

Type Test: ☒ Hydro ☐ Pneumatic ☐ Halide ☐ Vacuum ☐ Helium

Test Meduim: ☒ Water ☐ Oil ☐ Air ☐ Freon & Nitrogen ☐ Helium FIS 34.11e

Test Boundaries: SEE REMARKS BELOW

ACCEPTANCE CRITERIA:

Required Test Pressure 375 PSI

Required Time ☒ 10 minutes NA Other: NA

Per P-Code P224A Other: NA

Pre-Hydro Walkdown complete W R Ford Date: 11-1-89

Quality Pre-Hydro Walkdown complete Mike Davis II Date: 11-2-89

Actual Test Pressure 375 PSI Actual Length of Test 12 min.

M. & T. E.: CDS No. 479-A CAL 10-26-89 Re-Cal Due Date 11-26-89

Test Results: ☒ Acceptable ☐ Unacceptable

REMARKS:

HYDRO TEST OF CORE WELDS AS LISTED
PCP 9AD REV.3 FW1
PCP 9AAA REV.1 FW1 & SW1

Test between Points 1 and 2 with no Visible Leakage JMD II 11-2-89

PCP 9AG, AD, AC, AB, AAA
DW 11-8-89

INFORMATION ONLY

Mike Davis II 11-2-89 R Brown III 11-38

QC Acceptance Date Reviewed By Date

F-127 Rev 6 (6-88)

ASR 15-64 (6-88) Rev 5 ID 26033

RECEIVED NOV 10 1989

Page 1 of 3

"Q" "S" Distribution

11-6-89

MK-FERGUSON

HYDRO / PNEUMATIC TEST RECORD

Report No. 21-110689-08
Test Date 11-6-89
Procedure No. MKCP 600 R/C

PROJECT / AMO 1780 DA 8550 AREA /BLDG. No. 2218-05UG

DWG. / REV. PCP 46B-0 / PCP9AH-1

Type Test: ☒ Hydro ☐ Pneumatic ☐ Halide ☐ Vacuum ☐ Helium P.P. 71P PRT 2 OF 2

Test Meduim: ☒ Water ☐ Oil ☐ Air ☐ Freon & Nitrogen ☐ Helium F/S 34.11c

Test Boundaries: SEE REMARKS BELOW

ACCEPTANCE CRITERIA: Required Test Pressure 375 PSI

Required Time ☒ 10 minutes ~~12 min~~ NA Other: NA

Per P-Code P224A Other: NA

Pre-Hydro Walkdown complete V.R. [signature] Date: 11-3-89

Quality Pre-Hydro Walkdown complete Mike Davis Date: 11-6-89

Actual Test Pressure 375 PSIG Actual Length of Test 12 min.

M. & T. E.: CDS No. 479-A cal 10-26-89 Re-Cal Due Date 11-26-89

Test Results: ☒ Acceptable ☐ Unacceptable

REMARKS:

HYDRO TEST OF THE FOLLOWING CORE PIPING WELDS. PCP9AH FW's 1-6-7-8 SW's 3-4-5-7-11 PCP46B-SW10

NOTE: TEST Between points 1 and 2 with no Leakage. JMD II 11-6-89

INFORMATION ONLY

pcp 9AH

pcp 46B

DWF 11/10/89

Mike Davis II 11-6-89 B. Brown II 11-7-89

QC Acceptance Date Reviewed By Date

ASR 15-64 (6-88) Rev 5 ID 26033

RECEIVED NOV 10 1989

127 Rev 6 (6-88)

"Q" "S" Distribution	QA PKG [redacted] II 11-6-89 MK-FERGUSON A MORRISON KNUDSEN COMPANY	Report No. 21-110689-06
		Test Date 11-6-89
		Procedure No. PIP 015 R/03

HYDRO / PNEUMATIC TEST RECORD

PROJECT / AMO 1780 DA S550 AREA /BLDG. No. S221 / OSDG

DWG. / REV. PCP 46B R/0 / PCP 9AH R/1

PIP 71P PART 1 of 2
F/S 34.11E

Type Test: ☐ Hydro ☒ Pneumatic ☐ Halide ☐ Vacuum ☐ Helium

Test Meduim: ☐ Water ☐ Oil ☐ Air ☒ ~~Freon~~ & Nitrogen ☐ Helium

Test Boundaries:

ACCEPTANCE CRITERIA:

Required Test Pressure 20 PSI

Required Time ☒ 10 minutes NA Other: NA

Per P-Code P 224A Other: NA

Pre-Hydro Walkdown complete [signature] Date: 11-6-89

Quality Pre-Hydro Walkdown complete Mike Davis Date: 11-6-89

Actual Test Pressure 21 PSI Actual Length of Test 33 min.

M. & T. E.: CDS No. 305-A CAL ~~10-26-89~~ 6-7-89 JMD II 11-6-89 Re-Cal Due Date 12/89

Test Results: ☒ Acceptable ☐ Unacceptable

REMARKS: BUBBLE LEAK TEST OF THE FOLLOWING CORE PIPING WELDS - PCP9AH FWs 1-6-7-8 SWs 3-4-5-7-11 PCP 46B SW10

NOTE TEST BETWEEN POINTS (1) AND (2) WITH NO LEAKAGE FOUND WITH THE BUBBLE LEAK METHOD. JMD II 11-6-89

INFORMATION ONLY

Mike Davis II 11-6-89 [signature] 11-7-89

QC Acceptance Date Reviewed By Date

ASR 15-64 (6-88) Rev 5 ID 26033 F-127 Rev 6 (6-88)

RECEIVED NOV 10 1989

PAGE 1 of 3

"C" "S" Distribution	QA PKG [redacted]	Report No. 21-110689-06
	MK-FERGUSON	Test Date 11-6-89
	HYDRO / PNEUMATIC TEST RECORD	Procedure No. PIP 015 R/03

PROJECT / AMO 1780 DA 5550 AREA /BLDG. No. 5221 / 0505

DWG. / REV. PCP 46B % / PCP 9AH %

Type Test: ☐ Hydro ☒ Pneumatic ☐ Halide ☐ Vacuum ☐ Helium

PIP 71 PART 1 of 2
F/S 34.11E

Test Meduim: ☐ Water ☐ Oil ☐ Air ☒ ~~Freon~~ & Nitrogen ☐ Helium

Test Boundaries:

ACCEPTANCE CRITERIA:

Required Test Pressure 20 PSI

Required Time ☒ 10 minutes NA Other: NA

Per P-Code P 224A Other: NA

Pre-Hydro Walkdown complete [signature] Date: 11-6-89

Quality Pre-Hydro Walkdown complete [signature] Date: 11-6-89

Actual Test Pressure 21 PSI Actual Length of Test 33 min.

M. & T. E.: CDS No. 305-A CAL ~~10-26-89~~ 6-7-89 Re-Cal Due Date 12/89

Test Results: ☑ Acceptable ☐ Unacceptable

REMARKS: BUBBLE LEAK TEST OF THE FOLLOWING CORE PIPING WELDS - PCP9AH FW's 1-6-7-8 SW's 3-4-5-7-11 PCP 46B SW10

NOTE TEST BETWEEN POINTS (1) AND (2) WITH NO LEAKAGE FOUND WITH THE BUBBLE LEAK METHOD. [signature] 11-6-89

INFORMATION ONLY

[signature]	11-6-89	[signature]	11-7-89
QC Acceptance	Date	Reviewed By	Date

ASR 15-64 (6-85) Rev 5 ID 26033

F-127 Rev 6 (6-88)

RECEIVED NOV 10 1989

PAGE 1 of 3

"C" "S" Distribution	QA PKG [redacted] 11-6-89 MK-FERGUSON	Report No. 21-110689-06
	HYDRO / PNEUMATIC TEST RECORD	Test Date 11-6-89
		Procedure No. PIP 01S 7103

PROJECT / AMO 1780 DA 5550 AREA /BLDG. No. 5221 / 05UG

DWG. / REV. PCP 46B % 1 PCP 9AH %

PIP 71P PART 1 of 2
F/S 34.11E

Type Test: ☐ Hydro ☒ Pneumatic ☐ Halide ☐ Vacuum ☐ Helium

Test Medulm: ☐ Water ☐ Oil ☐ Air ☒ ~~Freon~~ & Nitrogen ☐ Helium

Test Boundaries:

ACCEPTANCE CRITERIA:

Required Test Pressure 20 PSI

Required Time ☒ 10 minutes NA Other: NA

Per P-Code P 224A Other: NA

Pre-Hydro Walkdown complete [signature] Date: 11-6-89

Quality Pre-Hydro Walkdown complete [signature] Date: 11-6-89

Actual Test Pressure 21 PSI Actual Length of Test 33 min.

M. & T. E.: CDS No. 305-A CAL ~~10-26-89~~ 6-7-89 Re-Cal Due Date 12/89

Test Results: ☒ Acceptable ☐ Unacceptable

REMARKS: BUBBLE LEAK TEST OF THE FOLLOWING CORE PIPING WELDS - PCP9AH FLS 1-6-7-8 SWS 3-4-5-7-11 PCP 46B SW10

NOTE TEST BETWEEN POINTS (1) AND (2) WITH NO LEAKAGE FOUND WITH THE BUBBLE LEAK METHOD. [signature] 11-6-89

INFORMATION ONLY

[signature] 11-6-89 [signature] 11-7-89

QC Acceptance Date Reviewed By Date

F-127 Rev 6 (6-88)

ASR 15-64 (6-88) Rev 5 ID 26033

RECEIVED NOV 10 1989

"C" "S" Distribution

[redacted]

MK-FERGUSON

HYDRO / PNEUMATIC TEST RECORD

Report No. 21-110689-C4
Test Date 11-6-89
Procedure No. MKCP 600 R/10

PROJECT / AMO 1780 DA $550 AREA /BLDG. No. 221S / OSUG

DWG. / REV. PCP 47B R/4 PCP 47C R/1

PP. 710 Part 2 of 2
F/S 34.11e

Type Test: ☒ Hydro ☐ Pneumatic ☐ Halide ☐ Vacuum ☐ Helium

Test Medulm: ☒ Water ☐ Oil ☐ Air ☐ Freon & Nitrogen ☐ Helium

Test Boundaries: SEE SKETCHES LISTED ABOVE

ACCEPTANCE CRITERIA:

Required Test Pressure 375 PSI

Required Time ☒ 10 minutes NA Other: NA

Per P-Code Other: NA

Pre-Hydro Walkdown complete [signature] Date: 11-6-89

Quality Pre-Hydro Walkdown complete Mike Davis II Date: 11-6-89

Actual Test Pressure 375 PSI Actual Length of Test 12 min.

M. & T. E.: CDS No. 479-A Cal 10-26-89 Re-Cal Due Date 11-26-89

Test Results: ☒ Acceptable ☐ Unacceptable

REMARKS: HYDRO TEST OF FW 6 ON CORE PIPING PCP 47C R/1

NOTE: TEST BETWEEN POINTS 1 AND 2 WITH NO LEAKAGE JMD II 11-6-89

PCP 47C & 47B
DMK 11-10-89

INFORMATION ONLY

RECEIVED NOV 1 0 1989

Mike Davis II 11-6-89
QC Acceptance Date

[signature] 11-7-89
Reviewed By Date

F-127 Rev 6 (6-88)

"Q" "S" Distribution

[redacted] MK-FERGUSON
A MORRISON KNUDSEN COMPANY

HYDRO / PNEUMATIC TEST RECORD

Report No. 21-110689-02
Test Date 11-6-89
Procedure No. P.P 015 R/0 R

PROJECT / AMO 1780 DA 3550 AREA /BLDG. No. 221S / OSUG
DWG. / REV. PCP 47B R/4 / PCP 47C R/1

P.P. 710 Pt. 1 of 2
F/S [redacted]

Type Test: ☐ Hydro ☒ Pneumatic ☐ Halide ☐ Vacuum ☐ Helium

Test Medium: ☐ Water ☐ Oil ☐ Air ☒ ~~Freon~~ & Nitrogen ☐ Helium

Test Boundaries: SEE SKETCHES LISTED ABOVE

ACCEPTANCE CRITERIA: Required Test Pressure 20 PSI
Required Time ☐ 10 minutes 30 MINUTES Other: NA
Per P-Code P-224A Other: NA
Pre-Hydro Walkdown complete W.R. [signature] Date: 11-6-89
Quality Pre-Hydro Walkdown complete Mike Davis II Date: 11-6-89

Actual Test Pressure 21 PSI Actual Length of Test 33 min.
M. & T. E.: CDS No. 305-A CAL 6-7-89 Re-Cal Due Date 12/89

Test Results: ☒ Acceptable ☐ Unacceptable

REMARKS: BUBBLE LEAK TEST OF FW6 ON Core
P.Ping - PCP 47C R/1
NOTE: Test Between Points 1 and 2
with no visible leaks JMD II 11-6-89
with Bubble Leak method.

PCP 47C & 47B
DMF 11-10-89

INFORMATION ONLY

RECEIVED NOV 1 [illegible] 1989

Mike Davis II	11-6-89	B Brown CII	11.7.89
QC Acceptance	Date	Reviewed By	Date

"Q" "S" Distribution

[redacted] MK-FERGUSON

HYDRO / PNEUMATIC TEST RECORD

Report No. 21-110689-02
Test Date 11-6-89
Procedure No. P.P 015 R/0 R

PROJECT / AMO 1780 DA 3550 AREA /BLDG. No. 221S / OSUG

DWG. / REV. PCP 47B R/4 / PCP 47C R/1

P.P. 710 Pt. 1 of 2
F/S [redacted]

Type Test: ☐ Hydro ☒ Pneumatic ☐ Halide ☐ Vacuum ☐ Helium

Test Medium: ☐ Water ☐ Oil ☐ Air ☒ ~~Freon &~~ Nitrogen ☐ Helium

Test Boundaries: SEE SKETCHES LISTED ABOVE

ACCEPTANCE CRITERIA:

Required Test Pressure 20 PSI

Required Time ☐ 10 minutes 30 MINUTES Other: NA

Per P-Code P-224A Other: NA

Pre-Hydro Walkdown complete W.R. [signature] Date: 11-6-89

Quality Pre-Hydro Walkdown complete Mike Davis II Date: 11-6-89

Actual Test Pressure 21 PSI Actual Length of Test 33 min.

M. & T. E.: CDS No. 305-A CAL 6-7-89 Re-Cal Due Date 12/89

Test Results: ☒ Acceptable ☐ Unacceptable

REMARKS: BUBBLE LEAK TEST OF FW6 ON Core
P.Ping - PCP 47C R/1
NOTE: Test Between Points 1 and 2
with No visible Leaks JMD II 11-6-89
with Bubble Leak method.

PCP 47C & 47B
DMF 11-10-89

INFORMATION ONLY

RECEIVED NOV 1 0 1989

Mike Davis II 11-6-89 [signature] 11.7.89

QC Acceptance Date Reviewed By Date

ASR 15-64 (6-88) Rev 5 ID 26033

F-127 Rev 6 (6-88)

"Q" "S" Distribution	[redacted] MK-FERGUSON	Report No. 21-110689-02
	HYDRO / PNEUMATIC TEST RECORD	Test Date 11-6-89
		Procedure No. P.P 015 R/0B

PROJECT / AMO 1780 DA 3550 AREA /BLDG. No. 221S / OSUG

DWG. / REV. PCP 47B R/4 / PCP47C R/1

P.P. 710 Pt. 1 of 2
F/S [redacted]

Type Test: ☐ Hydro ☒ Pneumatic ☐ Halide ☐ Vacuum ☐ Helium

Test Medium: ☐ Water ☐ Oil ☐ Air ☒ ~~Freon &~~ Nitrogen ☐ Helium

Test Boundaries: SEE SKETCHES LISTED ABOVE

ACCEPTANCE CRITERIA: Required Test Pressure 20 PSI

Required Time ☐ 10 minutes 30 MINUTES Other: NA

Per P-Code P-224A Other: NA

Pre-Hydro Walkdown complete W.R. [signature] Date: 11-6-89

Quality Pre-Hydro Walkdown complete Mike Davis II Date: 11-6-89

Actual Test Pressure 21 PSI Actual Length of Test 33 min.

M. & T. E.: CDS No. 305-A CAL 6-7-89 Re-Cal Due Date 12/89

Test Results: ☒ Acceptable ☐ Unacceptable

REMARKS: BUBBLE LEAK TEST OF FW6 ON Core Piping - PCP 47C R/1

NOTE: Test Between points 1 and 2 with no visible leaks JMD II 11-6-89 with Bubble Leak method.

PCP 47C & 47B
DWF 11-10-89

INFORMATION ONLY

RECEIVED NOV 1 0 1989

Mike Davis II	11-6-89	[signature]	11.7.89
QC Acceptance	Date	Reviewed By	Date

67 XFOB 10-25-89

Page 1 of 3

"Q" Distribution	"S"

QA PKG #

MK-FERGUSON
A MORRISON KNUDSEN COMPANY

HYDRO / PNEUMATIC TEST RECORD

Report No. 21-102089-02
Test Date 10-20-89
Procedure No. PIP015 R/06

PROJECT / AMO 1780 DA S550 AREA /BLDG. No. S-OSUG

DWG. / REV. PCP9AG REV.D / PCP9AD REV.3

P.P. 71M PART 1 OF 2

Type Test: ☐ Hydro ☒ Pneumatic ☐ Halide ☐ Vacuum ☐ Helium

FIS 34.11e

Test Medium: ☐ Water ☐ Oil ☐ Air ☒ ~~Freon~~ Nitrogen ☐ Helium

Test Boundaries: SEE SKETCHES LISTED ABOVE AND REMARKS BELOW

ACCEPTANCE CRITERIA:

Required Time ☐ 10 minutes 30 MINUTES

Required Test Pressure 20 PSI

Other: NA

Per P-Code P224A

Other: NA

Pre-Hydro Walkdown complete W.R. [signature] Date: 10-18-89

Quality Pre-Hydro Walkdown complete [signature] Date: 10-20-89

Actual Test Pressure 21 PSI

Actual Length of Test 12 min.

M. & T. E.: CDS No. 427-A CAL 7-5-89

Re-Cal Due Date 1/90

Test Results: ☒ Acceptable ☐ Unacceptable

REMARKS: BUBBLE LEAK TEST (PER IDM PD 875) OF FW 1 OF PCPAG REV.0. OTHER ~~FW~~ SW ON CORE DONE @ CENTRAL SHOPS (FW2ON 9AG). FW ON PCP 9AD REV.3 TESTED PER PIPE PKG 71J (Q.A. PKG 67Q)

WORK DONE PER DCF 4498

INFORMATION ONLY

Test between points One & Two with No Leakage Detected with Bubble Leak

JMD II 10-20-89

[signature] II — QC Acceptance — 10-20-89 Date

[signature] II — Reviewed By — 10-23-89 Date

ASR 15-64 (6-88) Rev 5 ID 26033

F-127 Rev 6 (6-88)

ORIGINAL

MK-FERGUSON

FINAL WALKDOWN CHECKLIST

"Q" ☐ "NON-Q" ☐
Distribution:
Project Records Center • Constr.

PROJECT S1780 QP 14.2 Rev. 0

FWVT S1780-136 QA ACCEPTANCE

ITEM No.	ACC	REJ	REMARKS
FACILITY SEGMENT- 34.11E			
VERIFY THAT ASSOCIATED ITEMS HAVE PROPER IDENTIFICATION TAGS/LABELS ATTACHED AND THE			
HANGER SPAN IS IN ACCORDANCE WITH DESIGN REQUIREMENTS IN ADDITION TO THE APPLICABLE			
REQUIREMENTS OF QP-14.2 LATEST REVISION.			
ATTACHED ARE THE LATEST DESIGN REVISION OF THE P & ID's TO BE USED IN CONJUNCTION			
WITH THE CHECKLIST. IF A REJECTABLE ITEM IS FOUND, CIRCLE THAT ITEM ON THE ATTACHED			
P & ID AND ASSIGN A SEQUENTIAL NUMBER TO THAT ITEM THEN LIST THE ITEM # ON CHECKLIST			
INDICATE REJECT AND GIVE THE DESCRIPTION OF THE DEFICIENCY WITH THE ASSIGNED # IN			
REMARKS.			
NOTE: IF AN ITEM IS INACCESSIBLE, INDICATE THIS ON DRAWING AND GIVE REASON FOR			
INACCESSIBILITY.			

Page 1 of 7

T/O SEG. NO. 34.11E

41-10 20 88-03

QC FINAL ACCEPTANCE

John K. Gibson

LOCI REVIEW

R Brown 10-21-88

ORIGINAL

MK-FERGUSON

FINAL WALKDOWN CHECKLIST

"Q" ☐ "NON-Q" ☐
Distribution:
Project Records Center • Constr.

PROJECT S1780 QP 14.2 Rev. 0

FWVT S1780-136 QA ACCEPTANCE

ITEM No.	ACC	REJ	REMARKS
FACILITY SEGMENT- 34.11E			
VERIFY THAT ASSOCIATED ITEMS HAVE PROPER IDENTIFICATION TAGS/LABELS ATTACHED AND THE HANGER SPAN IS IN ACCORDANCE WITH DESIGN REQUIREMENTS IN ADDITION TO THE APPLICABLE REQUIREMENTS OF QP-14.2 LATEST REVISION.			
ATTACHED ARE THE LATEST DESIGN REVISION OF THE P & ID's TO BE USED IN CONJUNCTION WITH THE CHECKLIST. IF A REJECTABLE ITEM IS FOUND, CIRCLE THAT ITEM ON THE ATTACHED P & ID AND ASSIGN A SEQUENTIAL NUMBER TO THAT ITEM THEN LIST THE ITEM # ON CHECKLIST INDICATE REJECT AND GIVE THE DESCRIPTION OF THE DEFICIENCY WITH THE ASSIGNED # IN REMARKS.			
NOTE: IF AN ITEM IS INACCESSIBLE, INDICATE THIS ON DRAWING AND GIVE REASON FOR INACCESSIBILITY.			

page 1 of 7

T/O SEG. NO. 34.11E

41-10 20 88-03

QC FINAL ACCEPTANCE

John R. Sinfsay Re-II

LOCI REVIEW

B Brow 10 21 88

ORIGINAL

MK-FERGUSON

FINAL WALKDOWN CHECKLIST

"Q" ☐ "NON-Q" ☐
Distribution:
Project Records Center • Constr.

PROJECT S1780 QP 14.2 Rev. 0

FWVT S1780-136 QA ACCEPTANCE

ITEM No.	ACC	REJ	REMARKS
FACILITY SEGMENT- 34.11E			
VERIFY THAT ASSOCIATED ITEMS HAVE PROPER IDENTIFICATION TAGS/LABELS ATTACHED AND THE HANGER SPAN IS IN ACCORDANCE WITH DESIGN REQUIREMENTS IN ADDITION TO THE APPLICABLE REQUIREMENTS OF QP-14.2 LATEST REVISION.			
ATTACHED ARE THE LATEST DESIGN REVISION OF THE P & ID's TO BE USED IN CONJUNCTION WITH THE CHECKLIST. IF A REJECTABLE ITEM IS FOUND, CIRCLE THAT ITEM ON THE ATTACHED P & ID AND ASSIGN A SEQUENTIAL NUMBER TO THAT ITEM THEN LIST THE ITEM # ON CHECKLIST INDICATE REJECT AND GIVE THE DESCRIPTION OF THE DEFICIENCY WITH THE ASSIGNED # IN REMARKS.			
NOTE: IF AN ITEM IS INACCESSIBLE, INDICATE THIS ON DRAWING AND GIVE REASON FOR INACCESSIBILITY.			

page 1 of 7

T/O SEG. NO. 34.11E

41-10 20 88-03

QC FINAL ACCEPTANCE

John R. [illegible] Rev II

LOCI REVIEW

B Brown 10 21 88

ASR 15-181 (3-88) ID 26095

F-572 REV 2 (3-88)

Test Report No. 171/176, 29
Facility Segment 34.11e

ASR 4-128
Rev. 8/84
File ID #9837

"Q" ☐ "S" ☐
Distribution:
Project Records Center-Cons

INCREMENT LEAK TESTS
(FIELD PIPING)

PROJECT: 1080 AREA: S550

DRAWING NOS: W761588, W750257,

ORIGINAL REPORT WITH MK-F

SYSTEM: PROCESS SLUDGE

TEST DATA

Type of Test			Pipe	Core	Line No.	From	To	CDS No.	Pressure	Time	QC Inspector	D A
Hydro	Halide	Other										
✓				✓	PEN 171	3	4	53B 12/86	375 PSIG	30 MIN	BMB	8/ 86
	✓			✓	PEN 170	5	6	928 11/86 934 11/86	15 PSIG	30 MIN	BMB	8/ 86
✓				✓	PEN 170	5	6	53B 12/86	375 PSIG	30 MIN	BMB	8/ 86
✓			JACKET 6"		PEN 168	1	2	29B 1/87	127 PSIG	30 MIN	BMB	8/6 86
	✓			✓	PEN 169	7	8	928 11/86 934 11/86	15 PSIG	30 MIN	BMB	8/8 86
✓				✓	PEN 169	7	8	53B 12/86	380 PSIG	30 MIN	BMB	8/8 86
✓			JACKET 6"		PEN 170	6	9	29B 1/87	125 PSIG	30 MIN	BMB	8/ 86
✓			JACKET 6"		PEN 171	4	10	29B 1/87	130 PSIG	30 MIN	BMB	8/ 86
✓			JACKET 6"		PEN 169	7	8	29B 1/87	127 PSIG	30 MIN	BMB	8/ 86

COMMENTS:

Test Report No. 78-A

ASR 2-98 (11/80)

T/C 34.11E

Q	S ✓
Distribution:	
Project Records Center	Constr
Division Engineer	
T & I	
Pipe	

FILE ID #12800

Savannah River Plant
PRESSURE TEST REPORT

W750259
W750137

Project 1780 AMO 8-1047 N/A Area S Bldg. No. 221-S & 511-S Dwg. W750040

Test Location: Shop N/A Field ✓ Service RCZ (Jacket)

Fabrication: Pipe ✓ Tank N/A Equipment N/A Size 10", 6" ½" Material C/S, S/S

Type Test: Hydro ✓ Pneumatic N/A Halide N/A Vacuum N/A

Test Medium: Water ✓ Oil N/A Air N/A Freon & Nitrogen N/A Vacuum N/A

Location: From Low Point Pump Pit No. 2 & 4 Point (5) To Termination Point (6)

Line No. RCZ Jacket; Pen 763 Vent Pen 771 vent

Actual Test Pressure: 130psig Vacuum N/A Actual Length of Test 60 min.

Special Instructions: Ref. Safety Procedure No. 52 - T&I S.I. T&I 5

(Protection: Safety, Blank Offs, Etc.)

Acceptance Criteria: Test Pressure 125psig Time (Minimum 15 min. or as req.) Vacuum N/A

Per Spec. N/A P-Code N/A Dwg. N/A Teletype No. N/A Local Design ✓

Remarks Test Accepted with No Leakage, Test Per IDM #733

Gauge CDS No. 31B Expires 11-87

Test Requested by Don Sink (Div. Eng.) per _____ (Area Eng.)

	Name	Title
Test Accepted by: Testing & Inspection	D.S. Hays	T&I
Craft Foreman	W.R. Landrum	PIPE
Operations*		

Date 7-23-82

* Optional

Test Report No. 78-A

ASR 2-98 (11/80)

T/C 34.11E

Q	S ✓
Distribution	
Project Records Center	Constr
Division Engineer	
T & I	
Pipe	

FILE ID #12800

Savannah River Plant
PRESSURE TEST REPORT

W750259
W750137
W750040

Project 1780 AMO 8-1047 N/A Area S Bldg. No. 221-S & 511-S Dwg.

Test Location: Shop N/A Field ✓ Service RCZ (Jacket)

Fabrication: Pipe ✓ Tank N/A Equipment N/A Size 10", 6" ½" Material C/S, S/S

Type Test: Hydro ✓ Pneumatic N/A Halide N/A Vacuum N/A

Test Medium: Water ✓ Oil N/A Air N/A Freon & Nitrogen N/A Vacuum N/A

Location: From Low Point Pump Pit No. 4 Point (5) To Termination Point (6)

Line No. RCZ Jacket; Pen 763 vent Pen 771 vent

Actual Test Pressure: 130psig Vacuum N/A Actual Length of Test 60 min.

Special Instructions: Ref. Safety Procedure No. 52 - T&I S.I. T&I 5

(Protection: Safety, Blank Offs, Etc.)

Acceptance Criteria: Test Pressure 125psig Time (Minimum 15 min. or as req.) Vacuum N/A

Per Spec. N/A P-Code N/A Dwg. N/A Teletype No. N/A Local Design ✓

Remarks Test Accepted with No Leakage, Test Per IDM #133

Gauge CDS No. 31B Expires 11-87

Test Requested by Don Sink (Div. Eng.) per _____ (Area Eng.)

	Name	Title
Test Accepted by: Testing & Inspection	G.S. Hays	T&I
Craft Foreman	W.R. Landrum	PIPE
Operations*		

Date 7-23-87

* Optional

Test Report No. 78-A

ASR 2-98 (11/80)

T/C 34.11E

"Q"	"S" ✓
Distribution	
Project Records Center - Constr	
Division Engineer	
T & I	
Pipe	

FILE ID #12800

Savannah River Plant
PRESSURE TEST REPORT

W750259
W750137
W750040

Project 1780 AMO 8-1047 N/A Area S Bldg. No. 221-S & 511-S Dwg.

Test Location: Shop N/A Field ✓ Service RCZ (Jacket)

Fabrication: Pipe ✓ Tank N/A Equipment N/A Size 10", 6" ½" Material C/S, S/S

Type Test: Hydro ✓ Pneumatic N/A Halide N/A Vacuum N/A

Test Medium: Water ✓ Oil N/A Air N/A Freon & Nitrogen N/A Vacuum N/A

Location: From Low Point Pump Pit No. 4 Point (5) To Termination Point (6)

Line No. RCZ Jacket; Pen 763 vent Pen 771 vent

Actual Test Pressure: 130 psig Vacuum N/A Actual Length of Test 60 min.

Special Instructions: Ref. Safety Procedure No. 52 - T&I S.I. T&I 5

(Protection: Safety, Blank Offs, Etc.)

Acceptance Criteria: Test Pressure 125 psig Time (Minimum 15 min. or as req.) Vacuum N/A

Per Spec. N/A P-Code N/A Dwg. N/A Teletype No. N/A Local Design ✓

Remarks Test Accepted with No Leakage, Test Per IDM #733

Gauge CDS No. 31B Expires 11-87

Test Requested by Don Sink (Div. Eng.) per _____ (Area Eng.)

	Name	Title
Test Accepted by: Testing & Inspection	D.S. Hays	T&I
Craft Foreman	W.R. Landrum	PIPE
Operations*		

Date 7-23-82

* Optional

Test Report No. 78-B

ASR 2-98 (11/80)

T/034 11E

"Q"	"S" ✓
Distribution:	
Project Records Center - Constr	
Division Engineer	
T & I	
Pipe	

FILE ID #12800

Savannah River Plant
PRESSURE TEST REPORT

W750137
W750040

Project 1280 AMO 8-1047 N/A Area S Bldg. No. 511S & 221-S Dwg. W750259

Test Location: Shop N/A Field ✓ Service RCZ

Fabrication: Pipe ✓ Tank N/A Equipment N/A Size 3" Material S/S, Hast

Type Test: Hydro ✓ Pneumatic N/A Halide N/A Vacuum N/A

Test Medium: Water ✓ Oil N/A Air N/A Freon & Nitrogen N/A Vacuum N/A

Location: From Low Point Pump Pit No. #4 Point (1) To 221-S in Canyon No. #303 (8) Point (2)

Line No. RCZ 4 (core)

Actual Test Pressure: 390 psig Vacuum N/A Actual Length of Test 30 min.

Special Instructions: Ref. Safety Procedure No. 52 - T&I S.I. T&I 5

(Protection: Safety, Blank Offs, Etc.)

Acceptance Criteria: Test Pressure 375 psig Time (Minimum 15 min. or as req.) Vacuum N/A

Per Spec. N/A P-Code N/A Dwg. N/A Teletype No. N/A Local Design ✓

Remarks Test Accepted with No Leakage Test per Product and Service Index

Gauge CDS No. 506 Expires 10-82

Test Requested by Don Sink (Div. Eng.) per _____ (Area Eng.)

	Name	Title
Test Accepted by: Testing & Inspection	G S Hays	T&I
Craft Foreman	William E Perry	Pipe
Operations*		

Date 1-11-87

* Optional

ASR 2-98 (11/80)

Test Report No. 67-A

T/C 34.11E

"Q"	"S" ✓
Distribution	
Project Records Center - Constr	
Division Engineer	
T & I	
Pipe	

FILE ID #12800

Savannah River Plant
PRESSURE TEST REPORT

Project 1780 AMO 8-1047 N/A Area S Bldg. No. 221-S & 51-S Dwg. W750259 W750040

Test Location: Shop N/A Field ✓ Service PCP

Fabrication: Pipe ✓ Tank N/A Equipment N/A Size 3" Material 3/S, Hast

Type Test: Hydro ✓ Pneumatic N/A Halide N/A Vacuum N/A

Test Medium: Water ✓ Oil N/A Air N/A Freon & Nitrogen N/A Vacuum N/A

Location: From Low Point Pump Pit No. #24 Point 2 To 221-S in Canyon No. #(16) 301 Point 4

Line No. PCP 9 (core)

Actual Test Pressure: 390 psig Vacuum N/A Actual Length of Test 30 min.

Special Instructions: Ref. Safety Procedure No. 52 - T&I S.I. T&I 5

(Protection: Safety, Blank Offs, Etc.)

Acceptance Criteria: Test Pressure 375 psig Time (Minimum 15 min. or as req.) Vacuum N/A

Per Spec. N/A P-Code N/A Dwg. N/A Teletype No. N/A Local Design ✓

Remarks Test Accepted With No Leakage; Test per Product and Service Index

Gauge CDS No. 506 Expires 10-87

Test Requested by Don Sink (Div. Eng.) per _____ (Area Eng.)

	Name	Title
Test Accepted by: Testing & Inspection	D. S. Hayes	T & I
Craft Foreman	William E. Posey	Pipe
Operations*		

Date 7-13-87

* Optional

ASR 2-98 (11/80)

Test Report No. 67-A

T/C 34.11E

"Q"	"S" ✓
Distribution	
Project Records Center - Constr	
Division Engineer	
T & I	
Pipe	

FILE ID #12800

Savannah River Plant
PRESSURE TEST REPORT

Project 1780 AMO 8-1047 N/A Area S Bldg. No. 221-S & 511-S Dwg. W750259 W750040

Test Location: Shop N/A Field ✓ Service PCP

Fabrication: Pipe ✓ Tank N/A Equipment N/A Size 3" Material 3/s, Hast.

Type Test: Hydro ✓ Pneumatic N/A Halide N/A Vacuum N/A

Test Medium: Water ✓ Oil N/A Air N/A Freon & Nitrogen N/A Vacuum N/A

Location: From Low Point Pump Pit No. #24 Point (2) To 221-S in Canyon No. #301 (16) Point (4)

Line No. PCP 9 (core)

Actual Test Pressure: 390psig Vacuum N/A Actual Length of Test 30 min.

Special Instructions: Ref. Safety Procedure No. 52 - T&I S.I. T&I 5

(Protection: Safety, Blank Offs, Etc.)

Acceptance Criteria: Test Pressure 375psig Time (Minimum 15 min. or as req.) Vacuum N/A

Per Spec. N/A P-Code N/A Dwg. N/A Teletype No. N/A Local Design ✓

Remarks Test Accepted With No Leakage; Test per Product and Service Index

Gauge CDS No. 506 Expires 10-87

Test Requested by Don Sink (Div. Eng.) per _____ (Area Eng.)

	Name	Title
Test Accepted by: Testing & Inspection	D.S. Hayes	T&I
Craft Foreman	William E. Posey	Pipe
Operations*		

Date 7-13-87

* Optional

Test Report No 67-A

ASR 2-98 (11/80)

T/C 34.11E

"Q"	"S" ✓
Distribution	
Project Records Center - Constr	
Division Engineer	
T & I	
Pipe	

FILE ID #12800

Savannah River Plant
PRESSURE TEST REPORT

Project 1780 AMO 8-1047 N/A Area S Bldg. No. 221-S & 511-S Dwg. W750259 W750040

Test Location: Shop N/A Field ✓ Service PCP

Fabrication: Pipe ✓ Tank N/A Equipment N/A Size 3" Material 3/S, Hast

Type Test: Hydro ✓ Pneumatic N/A Halide N/A Vacuum N/A

Test Medium: Water ✓ Oil N/A Air N/A Freon & Nitrogen N/A Vacuum N/A

Location: From Low Point Pump Pit No. #4 Point (2) To 221-S in Canyon No. #(16) 301 Point (4)

Line No. PCP 9 (core)

Actual Test Pressure: 390psig Vacuum N/A Actual Length of Test 30 min.

Special Instructions: Ref. Safety Procedure No. 52 - T&I S.I. T&I 5

(Protection: Safety, Blank Offs, Etc.)

Acceptance Criteria: Test Pressure 375psig Time (Minimum 15 min. or as req.) Vacuum N/A

Per Spec. N/A P-Code N/A Dwg. N/A Teletype No. N/A Local Design ✓

Remarks Test Accepted With No Leakage; Test per Product and Service Index

Gauge CDS No. 506 Expires 10-87

Test Requested by Don Sink (Div. Eng.) per _____ (Area Eng.)

	Name	Title
Test Accepted by: Testing & Inspection	D S Hayo	T&I
Craft Foreman	William E Posey	Pipe
Operations*		

Date 7-13-87

* Optional

Test Report No. 83-P

ASR 2-98 (11/80)

T/C 34-11E

"Q"	"S" ✓
Distribution:	
Project Records Center - Constr	
Division Engineer	
T & I	
Pipe	

FILE ID #12800

Savannah River Plant
PRESSURE TEST REPORT

Project 1780 AMO 8-1047 N/A Area S Bldg. No. 221-S & S-511 Dwg. 750-57 750-36

Test Location: Shop N/A Field ✓ Service SDP

Fabrication: Pipe ✓ Tank N/A Equipment N/A Size 10", 6", ½ Material C/S, ⅜

Type Test: Hydro ✓ Pneumatic N/A Halide N/A Vacuum N/A

Test Medium: Water ✓ Oil N/A Air N/A Freon & Nitrogen N/A Vacuum N/A

Location: From Low Point Pump Pit No 2 Point 1 To Termination Points 4

Line No. SDP Jacket, Pen 766 & 767 vent

Actual Test Pressure: 130 psig Vacuum N/A Actual Length of Test 60 min.

Special Instructions: Ref. Safety Procedure No. 52 - T&I S.I. T&I 5

(Protection: Safety, Blank Offs, Etc.)

Acceptance Criteria: Test Pressure 125 psig Time (Minimum 15 min. or as req.) Vacuum N/A

Per Spec. N/A P-Code N/A Dwg. N/A Teletype No. N/A Local Design ✓

Remarks Test Accepted With No Leakage, Test Per IDM # 433

Gauge CDS No. 31B Expires 11-87

Test Requested by Don Sink (Div. Eng.) per _____ (Area Eng.)

	Name	Title
Test Accepted by: Testing & Inspection	D.S. Hayes	T & I
Craft Foreman	W.R. Landers	PIPE
Operations*		

Date 7-23-82

* Optional

Test Report No. 83-B

ASR 2-98 (11/80)

T/C 34.11E

"Q"	"S" ✓
Distribution:	
Project Records Center - Constr	
Division Engineer	
T & I	
Pipe	

FILE ID #12800

Savannah River Plant
PRESSURE TEST REPORT

Project 1780 AMO 8-1047 N/A Area S Bldg. No. 511-S & 221-S Dwg. W750259 W750136

Test Location: Shop N/A Field ✓ Service SDP

Fabrication: Pipe ✓ Tank N/A Equipment N/A Size 3" (core) Material S/S & Hast.

Type Test: Hydro ✓ Pneumatic N/A Halide N/A Vacuum N/A

Test Medium: Water ✓ Oil N/A Air N/A Freon & Nitrogen N/A Vacuum N/A

Location: From Low Point Pump Pit No 2 4 Point (1) To 221-S in Canyon No 2 301 Point (2)

Line No. SDP 24

Actual Test Pressure: 380 psig Vacuum N/A Actual Length of Test 20 min.

Special Instructions: Ref. Safety Procedure No. 52 - T&I S.I. T&I 5

(Protection: Safety, Blank Offs, Etc.)

Acceptance Criteria: Test Pressure 375 psig Time (Minimum 15 min. or as req.) Vacuum N/A

Per Spec. N/A P-Code N/A Dwg. N/A Teletype No. N/A Local Design ✓

Remarks Test Accepted with No Leakage. Test per Product and Service Index

Gauge CDS No. 600 Expires 12-82

Test Requested by Don Sink (Div. Eng.) per _____ (Area Eng.)

	Name	Title
Test Accepted by: Testing & Inspection	D. S. Hays	T & I
Craft Foreman	William E. [illegible]	Pipe
Operations*		

Date 7-1-82

* Optional

Test Report No. 83-B

ASR 2-98 (11/80)

T/C 34.11E

Q	S ✓
Distribution:	
Project Records Center - Constr	
Division Engineer	
T & I	
Pipe	

FILE ID #12800

Savannah River Plant
PRESSURE TEST REPORT

Project 1780 AMO 8-1047 N/A Area S Bldg. No. 511-S & 221-S Dwg. W750259 W750136

Test Location: Shop N/A Field ✓ Service SDP

Fabrication: Pipe ✓ Tank N/A Equipment N/A Size 3" (core) Material S/S & Hast

Type Test: Hydro ✓ Pneumatic N/A Halide N/A Vacuum N/A

Test Medium: Water ✓ Oil N/A Air N/A Freon & Nitrogen N/A Vacuum N/A

Location: From Low Point Pump Pit No. 4 Point (1) To 221-S in Canyon No. 301 Point (2)

Line No. SDP 24

Actual Test Pressure: 380 psig Vacuum N/A Actual Length of Test 20 min.

Special Instructions: Ref. Safety Procedure No. 52 - T&I S.I. T&I 5

(Protection: Safety, Blank Offs, Etc.)

Acceptance Criteria: Test Pressure 375 psig Time (Minimum 15 min. or as req.) Vacuum N/A

Per Spec. N/A P-Code N/A Dwg. N/A Teletype No. N/A Local Design ✓

Remarks Test Accepted with No Leakage. Test per Product and Service Index

Gauge CDS No. 600 Expires 12-82

Test Requested by Don Sink (Div. Eng.) per _____ (Area Eng.)

	Name	Title
Test Accepted by: Testing & Inspection	D.S. Hays	T & I
Craft Foreman	William E. [illegible]	Pipe
Operations*		

Date 7-1-82

* Optional

Test Report No. 83-B

ASR 2-98 (11/80)

T/C 34.11E

Q	S ✓
Distribution:	
Project Records Center · Constr	
Division Engineer	
T & I	
Pipe	

FILE ID #12800

Savannah River Plant
PRESSURE TEST REPORT

Project 1790 AMO 8-1047 N/A Area S Bldg. No. 511-S & 221-S Dwg. W750259 W750136

Test Location: Shop N/A Field ✓ Service SDP

Fabrication: Pipe ✓ Tank N/A Equipment N/A Size 3" (core) Material S/S & Hast.

Type Test: Hydro ✓ Pneumatic N/A Halide N/A Vacuum N/A

Test Medium: Water ✓ Oil N/A Air N/A Freon & Nitrogen N/A Vacuum N/A

Location: From Low Point Pump Pit No. 4 Point (1) To 221-S in Canyon No. 301 Point (2)

Line No. SDP 24

Actual Test Pressure: 380 psig Vacuum N/A Actual Length of Test 20 min.

Special Instructions: Ref. Safety Procedure No. 52 - T&I S.I. T&I 5

(Protection: Safety, Blank Offs, Etc.)

Acceptance Criteria: Test Pressure 375 psig Time (Minimum 15 min. or as req.) Vacuum N/A

Per Spec. N/A P-Code N/A Dwg. N/A Teletype No. N/A Local Design ✓

Remarks Test Accepted with No Leakage. Test per Product and Service Index

Gauge CDS No. 600 Expires 12-82

Test Requested by Don Sink (Div. Eng.) per _____ (Area Eng.)

	Name	Title
Test Accepted by: Testing & Inspection	D. S. Hoyo	T & I
Craft Foreman	William E. Bay	Pipe
Operations*		

Date 7-1-82

* Optional

Test Report No. 83-C

ASR 2-98 (11/80)

T/C 34.11E

"Q"	"S"
Distribution:	
Project Records Center	Constr
Division Engineer	
T & I	
Pipe	

FILE ID #12800

Savannah River Plant
PRESSURE TEST REPORT

Project 1780 AMO 8-1047 N/A Area S Bldg. No. 511-S & 221-S Dwg. W750259 W750136

Test Location: Shop N/A Field ✓ Service SDP

Fabrication: Pipe ✓ Tank N/A Equipment N/A Size 3" (core) Material S/S & Hast

Type Test: Hydro ✓ Pneumatic N/A Halide N/A Vacuum N/A

Test Medium: Water ✓ Oil N/A Air N/A Freon & Nitrogen N/A Vacuum N/A

Location: From Low Point Pump P. + Noz 5 Point (9) To 221-S in Canyon Noz. 304 Point (4)

Line No. SDP25

Actual Test Pressure: 385 psig Vacuum N/A Actual Length of Test 20 min.

Special Instructions: Ref. Safety Procedure No. 52 - T&I S.I. T&I 5

(Protection: Safety, Blank Offs, Etc.)

Acceptance Criteria: Test Pressure 375 psig Time (Minimum 15 min. or as req.) Vacuum N/A

Per Spec. N/A P-Code N/A Dwg. N/A Teletype No. N/A Local Design ✓

Remarks Test Accepted with No Leakage Test per Product & Service Index

Gauge CDS No. 600 Expires 12-82

Test Requested by Don Sink (Div. Eng.) per _____ (Area Eng.)

	Name	Title
Test Accepted by: Testing & Inspection	D S Hayo	T & I
Craft Foreman	William E Posey	Pipe
Operations*		

Date 7-2-87

* Optional

Test Report No. 67-B

ASR 2-98 (11/80)

T/C 34.11E

"Q"	"S" ✓
Distribution:	
Project Records Center - Constr	
Division Engineer	
T & I	
Pipe	

FILE ID #12800

Savannah River Plant
PRESSURE TEST REPORT

Project 1780 AMO 8-1047 N/A Area S Bldg. No. 511-S & 221-S Dwg. W750040 W750259

Test Location: Shop N/A Field ✓ Service PCP

Fabrication: Pipe ✓ Tank N/A Equipment N/A Size 3" Material S/S Hast.

Type Test: Hydro N/A Pneumatic ✓ Halide N/A Vacuum N/A

Test Medium: Water N/A Oil N/A Air ✓ Freon & Nitrogen N/A Vacuum N/A

Location: From Low Point Pump Pit No. 2 Point (3) To 221-S in Canyon No. 2 #(16) 301 Point (4)

Line No. PCP 9 (core)

Actual Test Pressure: 17 psig Vacuum N/A Actual Length of Test 30 min.

Special Instructions: Ref. Safety Procedure No. 52 - T&I S.I. T&I 5

(Protection: Safety, Blank Offs, Etc.)

Acceptance Criteria: Test Pressure 15 psig Time (Minimum 15 min. or as req.) Vacuum N/A

Per Spec. 4482 P-Code P 224 Dwg. N/A Teletype No. N/A Local Design N/A

Remarks Test Accepted with No Leakage, Welds were Bubble Leak Tested

Gauge CDS No. 989 Expires 11 82

Test Requested by Don Sink (Div. Eng.) per _____ (Area Eng.)

	Name	Title
Test Accepted by: Testing & Inspection	G S Hays	T&I
Craft Foreman	William E Posey	Pipe
Operations*		

Date 7-13-87

* Optional

Test Report No. 67-B

ASR 2-98 (11/80)

T/C 34.11E

Q	S ✓
Distribution	
Project Records Center - Constr	
Division Engineer	
T & I	
Pipe	

FILE ID #12800

Savannah River Plant
PRESSURE TEST REPORT

Project 1780 AMO 8-1047 N/A Area S Bldg. No. 511-S & 221-S Dwg. W750040 W750259

Test Location: Shop N/A Field ✓ Service PCP

Fabrication: Pipe ✓ Tank N/A Equipment N/A Size 3" Material S/S Hast

Type Test: Hydro N/A Pneumatic ✓ Halide N/A Vacuum N/A

Test Medium: Water N/A Oil N/A Air ✓ Freon & Nitrogen N/A Vacuum N/A

Location: From Low Point Pump Pit No 2 Point 3 To 221-S in Canyon No 2 #(16) 301 Point 4

Line No. PCP9 (core)

Actual Test Pressure: 17 psig Vacuum N/A Actual Length of Test 30 min.

Special Instructions: Ref. Safety Procedure No. 52 - T&I S.I. T&I 5

(Protection: Safety, Blank Offs, Etc.)

Acceptance Criteria: Test Pressure 15 psig Time (Minimum 15 min. or as req.) Vacuum N/A

Per Spec. 4482 P-Code P 224 Dwg. N/A Teletype No. N/A Local Design N/A

Remarks Test Accepted with No Leakage, Welds were Bubble Leak Tested

Gauge CDS No. 989 Expires 11 87

Test Requested by Don Sink (Div. Eng.) per _____ (Area Eng.)

	Name	Title
Test Accepted by: Testing & Inspection	D.S. Hays	T&I
Craft Foreman	William E. Posey	Pipe
Operations*		

Date 7-13-87

* Optional

Test Report No. 67-B

ASR 2-98 (11/80)

T/C 34.11E

"Q"	"S" ✓
Distribution	
Project Records Center - Constr	
Division Engineer	
T & I	
Pipe	

FILE ID #12800

Savannah River Plant
PRESSURE TEST REPORT

Project 1780 AMO 8-1047 N/A Area S Bldg. No. 511-S & 221-S Dwg. W750040 W750259

Test Location: Shop N/A Field ✓ Service PCP

Fabrication: Pipe ✓ Tank N/A Equipment N/A Size 3" Material S/S Heat

Type Test: Hydro N/A Pneumatic ✓ Halide N/A Vacuum N/A

Test Medium: Water N/A Oil N/A Air ✓ Freon & Nitrogen N/A Vacuum N/A

Location: From Low Point Pump Pit No 2 Point (3) To 221-S in Canyon No 2 #(16) 301 Point (4)

Line No. PCP9 (core)

Actual Test Pressure: 17 psig Vacuum N/A Actual Length of Test 30 min.

Special Instructions: Ref. Safety Procedure No. 52 - T&I S.I. T&I 5

(Protection: Safety, Blank Offs, Etc.)

Acceptance Criteria: Test Pressure 15 psig Time (Minimum 15 min. or as req.) Vacuum N/A

Per Spec. 4482 P-Code P 224 Dwg. N/A Teletype No. N/A Local Design N/A

Remarks Test Accepted with No Leakage, Welds were Bubble Leak Tested

Gauge CDS No. 989 Expires 11 87

Test Requested by Don Sink (Div. Eng.) per _____ (Area Eng.)

	Name	Title
Test Accepted by: Testing & Inspection	G.S. Hays	T&I
Craft Foreman	William E. Posey	Pipe
Operations*		

Date 7-13-87

* Optional

Test Report No. 78-C

ASR 2-98 (11/80)

T/O 34.11e

"Q"	"S" ✓
Distribution:	
Project Records Center - Constr	
Division Engineer	
T & I	
Pipe	

FILE ID #12800

Savannah River Plant
PRESSURE TEST REPORT

W750137
W750040
W750259

Project 1780 AMO 8-1047 N/A Area S Bldg. No. 511-S & 221-S Dwg.

Test Location: Shop N/A Field ✓ Service RCZ

Fabrication: Pipe ✓ Tank N/A Equipment N/A Size 3" Material S/S, Hast

Type Test: Hydro N/A Pneumatic ✓ Halide N/A Vacuum N/A

Test Medium: Water N/A Oil N/A Air ✓ Freon & Nitrogen N/A Vacuum N/A

Location: From Low Point Pump Pit Noz #4 Point (1) To 221-S in Canyon Noz #(8) 303 Point (2)

Line No. RCZ 4 (core)

Actual Test Pressure: 15 psig Vacuum N/A Actual Length of Test 30 min.

Special Instructions: Ref. Safety Procedure No. 52 - T&I S.I. T&I 5

(Protection: Safety, Blank Offs, Etc.)

Acceptance Criteria: Test Pressure 15 psig Time (Minimum 15 min. or as req.) Vacuum N/A

Per Spec. 4482 P-Code P-224A Dwg. N/A Teletype No. N/A Local Design N/A

Remarks Test Accepted with No Leakage Welds were Bubble Leak Tested

Gauge CDS No. 989 Expires 11-82

Test Requested by Don Sink (Div. Eng.) per _____ (Area Eng.)

	Name	Title
Test Accepted by: Testing & Inspection	D. S. Hays	T & I
Craft Foreman	William E Pary	Pipe
Operations*		

Date 2-11-82

* Optional

JR 2-98 (11/80)

Facility Segment 34.11e

ORIGINAL REPORT IN PRC UNDER TRANSMITTAL #1757

Q	S X
Distribution:	
Project Records Center	Cons
Division Engineer	
T & I	
Pipe	

FILE ID #12800

Savannah River Plant
PRESSURE TEST REPORT

D195569 FIELD SMT

Project 1780 AMO 8-1047 N/A Area 511-S Bldg. No. 511-S Dwg. #1

Test Location: Shop N/A Field ✓ Service Leak Detection System

Fabrication: Pipe ✓ Tank N/A Equipment N/A Size 8", 2", 1" Material C/S

Type Test: Hydro ✓ Pneumatic N/A Halide N/A Vacuum N/A

Test Medium: Water ✓ Oil N/A Air N/A Freon & Nitrogen N/A Vacuum N/A

Location: From (3) D195569 To (4) Field SMT. #1

Line No. See Note #1 + #2

Actual Test Pressure: 135 #p.s.i Vacuum N/A Actual Length of Test 60 min.

Special Instructions: Ref. Safety Procedure No. 52 - T&I S.I. T&I 5

(Protection: Safety, Blank Offs, Etc.)

Acceptance Criteria: Test Pressure 125 #p.s.i Time (Minimum 15 min. or as req.) Vacuum N/A

Per Spec. N/A P-Code N/A Dwg. N/A Teletype No. 001976 Local Design N/A

Remarks Test Accepted: Plug Rods were out to allow entire system to be pressurized

Gauge CDS No. 53B Expires 8/86

Test Requested by F. G. Gatlin (Div. Eng.) per J. K. Blankenship (Area Eng.)

	Name	Title
Test Accepted by: Testing & Inspection	[illegible]	T&I
Craft Foreman	[illegible]	Pipe
Operations*		

Date 4/21/86

* Optional

Note #1 Line No. included in Test

LOX 318 LOX 71 LOX 46
LOX 94 LOX 69 PAN 972
LOX 32 LOX 49
LOX 31 LOX 68
LOX 87 LOX 47
X 50 LOX 70

Note #2

Leak Detection Boxes included in Test:

S550-200-080-00-T
S550-200-010-00-T
S550-200-020-00-T
S550-200-040-00-T

JR 2-98 (11/80)

Facility Segment 34.11e

ORIGINAL REPORT IN PRC UNDER TRANSMITTAL #1757

Q —	S X
Distribution:	
Project Records Center	Cons
Division Engineer	
T & I	
Pipe	

FILE ID #12800

Savannah River Plant
PRESSURE TEST REPORT

D195569 Field SMT.

Project 1780 AMO 8-1047 N/A Area 511-S Bldg. No. 511-S Dwg. #1

Test Location: Shop N/A Field ✓ Service Leak Detection System

Fabrication: Pipe ✓ Tank N/A Equipment N/A Size 8", 2", 1" Material C/S

Type Test: Hydro ✓ Pneumatic N/A Halide N/A Vacuum N/A

Test Medium: Water ✓ Oil N/A Air N/A Freon & Nitrogen N/A Vacuum N/A

Location: From (3) D195569 To (4) Field SMT. #1

Line No. See Note #1 & #2

Actual Test Pressure: 135 #p.s.i Vacuum N/A Actual Length of Test 60 min.

Special Instructions: Ref. Safety Procedure No. 52 - T&I S.I. T&I 5

(Protection: Safety, Blank Offs, Etc.)

Acceptance Criteria: Test Pressure 125 #p.s.i Time (Minimum 15 min. or as req.) Vacuum N/A

Per Spec. N/A P-Code N/A Dwg. N/A Teletype No. 001976 Local Design N/A

Remarks Test Accepted: Plug Rods were out to allow entire system to be pressurized

Gauge CDS No. 53B Expires 8/86

Test Requested by F. G. Gatlin (Div. Eng.) per J. H. Blankenship (Area Eng.)

	Name	Title
Test Accepted by: Testing & Inspection	[illegible]	T&I
Craft Foreman	[illegible]	Pipe
Operations*		

Date 4/21/86

* Optional

Note #1 Line No. included in Test

X 318	LOX 71	LOX 46
LOX 94	LOX 69	Rm 972
LOX 32	LOX 49	
LOX 31	LOX 68	
LOX 87	LOX 47	
X 50	LOX 70	

Note #2

Leak Detection Boxes included in Test:

S550-200-080-00-T
S550-200-010-00-T
S550-200-020-00-T
S550-200-040-00-T

JR 2-98 (11/80)

Facility Segment 34.11e

ORIGINAL REPORT IN PRC UNDER TRANSMITTAL #1757

Q	S X
Distribution:	
Project Records Center	Cons
Division Engineer	
T & I	
Pipe	

FILE ID #12800

Savannah River Plant
PRESSURE TEST REPORT

D195569 Field SKT.

Project 1780 AMO 8-1047 N/A Area 511-S Bldg. No. 511-S Dwg. #1

Test Location: Shop N/A Field ✓ Service Leak Detection System

Fabrication: Pipe ✓ Tank N/A Equipment N/A Size 8", 2", 1" Material C/S

Type Test: Hydro ✓ Pneumatic N/A Halide N/A Vacuum N/A

Test Medium: Water ✓ Oil N/A Air N/A Freon & Nitrogen N/A Vacuum N/A

Location: From (3) D195569 To (4) Field SKT. #1

Line No. See Note #1 + #2

Actual Test Pressure: 135 #p.s.i Vacuum N/A Actual Length of Test 60 min.

Special Instructions: Ref. Safety Procedure No. 52 - T&I S.I. T&I 5

(Protection: Safety, Blank Offs, Etc.)

Acceptance Criteria: Test Pressure 125 #p.s.i Time (Minimum 15 min. or as req.) Vacuum N/A

Per Spec. N/A P-Code N/A Dwg. N/A Teletype No. 001976 Local Design N/A

Remarks Test Accepted: Plug Rods were out to allow entire system to be pressurized

Gauge CDS No. 53B Expires 8/86

Test Requested by F. G. Gatlin (Div. Eng.) per J. K. Blankenship (Area Eng.)

	Name	Title
Test Accepted by: Testing & Inspection	[illegible]	T&I
Craft Foreman	[illegible]	Pipe
Operations*		

Date 4/21/86

* Optional

Note #1 Line No. included in Test

LOX 318	LOX 71	LOX 46
LOX 94	LOX 69	Pan 972
LOX 32	LOX 49	
LOX 31	LOX 68	
LOX 97	LOX 47	
LOX 50	LOX 70	

Note #2

Leak Detection Boxes included in Test:

S550-200-080-00-T
S550-200-010-00-T
S550-200-020-00-T
S550-200-040-00-T

ASR 2-98 (11/80)

Facility Segment 34.11e

ORIGINAL REPORT IN PRC UNDER TRANSMITTAL #1757

Savannah River Plant
PRESSURE TEST REPORT

Q ___ S X
Distribution:
Project Records Center Constr
Division Engineer
T & I
Pipe

FILE ID #12800

D195567 Field SHT #1

Project 1780 AMO 8-1047 N/A Area S Bldg. No. 511-S Dwg. ___

Test Location: Shop N/A Field ✓ Service Leak Detection System

Fabrication: Pipe ✓ Tank N/A Equipment N/A Size 8", 2", 1" Material C/S

Type Test: Hydro ✓ Pneumatic N/A Halide N/A Vacuum N/A

Test Medium: Water ✓ Oil N/A Air N/A Freon & Nitrogen N/A Vacuum N/A

Location: From (1) D195567 To (2) Field SH #1

Line No. See Note #1 & #2

Actual Test Pressure: 135 PSI Vacuum N/A Actual Length of Test 60 min.

Special Instructions: Ref. Safety Procedure No. 52 - T&I S.I. T&I 5

(Protection: Safety, Blank Offs, Etc.)

Acceptance Criteria: Test Pressure 125 PSI Time (Minimum 15 min. or as req.) Vacuum N/A

Per Spec. N/A P-Code N/A Dwg. N/A Teletype No. 001976 Local Design N/A

Remarks Test Accepted; Plug Rods were out to allow entire system to be pressurized

Gauge CDS No. 538 Expires 8/86

Test Requested by F. G. Gatlin (Div. Eng.) per J. K. Blankenship (Area Eng.)

	Name	Title
Test Accepted by: Testing & Inspection	[signature]	T&I
Craft Foreman	[signature]	Fitter
Operations*		

Date 4/17/86

* Optional

Note #1

Line no. included in test

LDX 167	LDX 65	LDX 128	LDX 29	
X 125	LDX 47	LDX 166	LDX 30	
LDX 127	LDX 48	LDX 34	LDX 109	
LDX 45	LDX 35	LDX 155	LDX 102	
	LDX 126	LDX 162	LDX 320	
			Pow 1237	

Note #2

Leak Detection Boxes included in test

S-550-200-110-00-T
S-550-200-100-00-T
S-550-200-30-00-T
S-550-200-40-00-T
S-550-200-150-00-T
S-550-200-140-00-T

MK-FERGUSON
A MORRISON KNUDSEN COMPANY

[redacted]

HYDRO/PNEUMATIC TEST RECORD

"Q" ☐ "S" ☑
Distribution:
Project Records Center-Constr.

IR No. #57-22488-07 PAGE 1 of 2

Test Boundaries (1) D195542 (2) D195542

Project No. 1780 Test No. N/A Location Low Point Pump Pit Date of Test 2-24-88

System Name SLUDGE TO VITRIFICATION BUILDING

Spool/Mark # of Piping/Vessel D195542 Dwg. # & Rev. 2

Applicable Specification Number 4482 / P-224A

Material to be Tested S/S 3" PIPE Test Medium Used AIR

Max. Chloride Allowed 250 PPM Results of Most Recent Chloride Test 1.0 PPM Date Performed 5-23-86

Max./Min Test Press. Allowed 20 PSIG Act. Test Press. 20 PSIG

Temperature of: Thermometer Number 44-A

Medium 51 °F Material 55 °F Atmospheric 55 °F

Test Gage:

CDS # 395-A Cal. Date 11-16-87 Re-Cal Due Date 5/88

Req'd Exam. Press. 20 PSIG Actual Exam Press. 20 PSIG

Start Time 10:40 Complete Time 11:05

Test Results (Acceptable/Unacceptable)

ACCEPTED, PNEUMATIC TEST ONLY. / WALK-DOWN-COMPLETE From (1) to (2)

Remarks: [redacted]

[signature] II57 2-24-88 [signature] 2/26/88
QC Acceptance Date Reviewed By Date

ASR# 15-64 (9/87)
FILE ID 26033

MK-FERGUSON
A MORRISON KNUDSEN COMPANY

[redacted]

HYDRO/PNEUMATIC TEST RECORD

Distribution:
Project Records Center-Constr.

IR No. 57-22488-07 PAGE 1 of 2

Test Boundaries (1) D195542 (2) D195542

Project No. 1780 Test No. N/A Location LOW POINT PUMP PIT Date of Test 2-24-88

System Name SLUDGE TO VITRIFICATION BUILDING

Spool/Mark # of Piping/Vessel D195542 Dwg. # & Rev. 2

Applicable Specification Number 4482 / P-224A

Material to be Tested S/S 3" PIPE Test Medium Used AIR

Max. Chloride Allowed 250 PPM Results of Most Recent Chloride Test 1.0 PPM Date Performed 5-23-86

Max./Min Test Press. Allowed 20 PSIG Act. Test Press. 20 PSIG

Temperature of: Thermometer Number 44-A

Medium 51 °F Material 55 °F Atmospheric 55 °F

Test Gage:

CDS # 395-A Cal. Date 11-16-87 Re-Cal Due Date 5/88

Req'd Exam. Press. 20 PSIG Actual Exam Press. 20 PSIG

Start Time 10:40 Complete Time 11:05

Test Results (Acceptable/Unacceptable)

ACCEPTED, PNEUMATIC TEST ONLY. / WALK-DOWN-COMPLETE FROM (1) TO (2)

Remarks: [redacted]

QC Acceptance II57 Date 2-24-88 Reviewed By Date 2/26/88

ASR# 15-64 (9/87)
FILE ID 26033

MK-FERGUSON
A MORRISON KNUDSEN COMPANY

[redacted]

HYDRO/PNEUMATIC TEST RECORD

Distributions
Project Records Center-Constr.

IR No. 57-22488-07 PAGE 1 of 2

Test Boundaries (1) D195542 (2) D195542

Project No. 1780 Test No. N/A Location LOW POINT PUMP PIT Date of Test 2-24-88

System Name SLUDGE TO VITRIFICATION BUILDING

Spool/Mark # of Piping/Vessel D195542 Dwg. # & Rev. 2

Applicable Specification Number 4482 / D-224A

Material to be Tested S/S 3" PIPE Test Medium Used AIR

Max. Chloride Allowed 250 PPM Results of Most Recent Chloride Test 1.0 PPM Date Performed 5-23-86

Max./Min Test Press. Allowed 20 PSIG Act. Test Press. 20 PSIG

Temperature of: Thermometer Number 44-A

Medium 51 °F Material 55 °F Atmospheric 55 °F

Test Gage:

CDS # 395-A Cal. Date 11-16-87 Re-Cal Due Date 5/88

Req'd Exam. Press. 20 PSIG Actual Exam Press. 20 PSIG

Start Time 10:40 Complete Time 11:05

Test Results (Acceptable/Unacceptable)

ACCEPTED, PNEUMATIC TEST ONLY. / WALK-DOWN-COMPLETE from (1) to (2)

Remarks: [redacted]

QC Acceptance 2-24-88 Date Reviewed By 2/26/88 Date

ASR# 15-84 (9/87)
FILE ID 26033

Test Report No 83-D

ASR 2 98 (11/80)

T/O 34.11E

Q	S ✓
Distribution:	
Project Records Center	Constr
Division Engineer	
T & I	
Pipe	

FILE ID #12800

Savannah River Plant
PRESSURE TEST REPORT

Project 1280 AMO 8-1047 N/A Area S Bldg. No. 511-S & 221-S Dwg. W750136 W750251

Test Location: Shop N/A Field ✓ Service SDP

Fabrication: Pipe ✓ Tank N/A Equipment N/A Size 3" Material SS Hast

Type Test: Hydro N/A Pneumatic ✓ Halide N/A Vacuum N/A

Test Medium: Water N/A Oil N/A Air ✓ Freon & Nitrogen N/A Vacuum N/A

Location: From Low Point Pump Pit No 2 4 Point (1) To 221-S in Canyon No 2 301 (9) Point (2)

Line No. SDP 24

Actual Test Pressure: 15 psig Vacuum N/A Actual Length of Test 35 min.

Special Instructions: Ref. Safety Procedure No. 52 - T&I S.I. T&I 5

(Protection: Safety, Blank Offs, Etc.)

Acceptance Criteria: Test Pressure 15 psig Time (Minimum 15 min. or as req.) Vacuum N/A

Per Spec. 4482 P-Code P-224A Dwg. N/A Teletype No. N/A Local Design N/A

Remarks Test Accepted With No Leakage Welds were Bubble Leak Tested

Gauge CDS No. 3613 Expires 10-82

Test Requested by Don Sink (Div. Eng.) per _____ (Area Eng.)

	Name	Title
Test Accepted by: Testing & Inspection	D S Hay	T&I
Craft Foreman	William E Perry	Pipe
Operations*		

Date 6-29 82

* Optional

Test Report No. 63-E

ASR 2-98 (11/80)

T/O 34.11E

Q	S ✓
Distribution:	
Project Records Center - Constr	
Division Engineer	
T & I	
Pipe	

FILE ID #12800

Savannah River Plant
PRESSURE TEST REPORT

Project 1780 AMO 8-1047 N/A Area S Bldg. No. 511-S & 221-S Dwg. W750136 750259

Test Location: Shop N/A Field ✓ Service SDP

Fabrication: Pipe ✓ Tank N/A Equipment N/A Size 3" Material SS Hast

Type Test: Hydro N/A Pneumatic ✓ Halide N/A Vacuum N/A

Test Medium: Water N/A Oil N/A Air ✓ Freon & Nitrogen N/A Vacuum N/A

Location: From Low Point Pump Pit No. 5 Point (5) To 221-S in Canyon No. 304 Point (4)

Line No. SDP 25

Actual Test Pressure: 15 psig Vacuum N/A Actual Length of Test 30 min.

Special Instructions: Ref. Safety Procedure No. 52 - T&I S.I. T&I 5

(Protection: Safety, Blank Offs, Etc.)

Acceptance Criteria: Test Pressure 15 psig Time (Minimum 15 min. or as req.) Vacuum N/A

Per Spec. 4482 P-Code P-224A Dwg. N/A Teletype No. N/A Local Design N/A

Remarks Test Accepted With No Leakage Weld were Bubble Leak Tested

Gauge CDS No. 361B Expires 10-82

Test Requested by Don Sink (Div. Eng.) per _____ (Area Eng.)

	Name	Title
Test Accepted by: Testing & Inspection	D S Hays	T & I
Craft Foreman	William E Posey	Pipe
Operations*		

Date 6-29-82

* Optional

Test Report No. 83-E

ASR 2-98 (11/80)

T/O 34.11E

"Q"	"S" ✓
Distribution:	
Project Records Center - Constr	
Division Engineer	
T & I	
Pipe	

FILE ID #12800

Savannah River Plant
PRESSURE TEST REPORT

Project 1780 AMO 8-1047 N/A Area S Bldg. No. 511-S & 221-S Dwg. W750136 750259

Test Location: Shop N/A Field ✓ Service SDP

Fabrication: Pipe ✓ Tank N/A Equipment N/A Size 3" Material S/S Hast

Type Test: Hydro N/A Pneumatic ✓ Halide N/A Vacuum N/A

Test Medium: Water N/A Oil N/A Air ✓ Freon & Nitrogen N/A Vacuum N/A

Location: From Low Point Pump Pit No. 5 Point (3) To 221-S in Canyon No. 304 Point (4)

Line No. SDP 25

Actual Test Pressure: 15 psig Vacuum N/A Actual Length of Test 30 min.

Special Instructions: Ref. Safety Procedure No. 52 - T&I S.I. T&I 5

(Protection: Safety, Blank Offs, Etc.)

Acceptance Criteria: Test Pressure 15 psig Time (Minimum 15 min. or as req.) Vacuum N/A

Per Spec. 4482 P-Code P-224A Dwg. N/A Teletype No. N/A Local Design N/A

Remarks Test Accepted With No Leakage. Weld were Bubble Leak Tested

Gauge CDS No. 361B Expires 10-82

Test Requested by Don Sink (Div. Eng.) per _____ (Area Eng.)

	Name	Title
Test Accepted by: Testing & Inspection	[signature]	T&I
Craft Foreman	William E Posey	Pipe
Operations*		

Date 6-29-82

* Optional

Test Report No. 63-E

ASR 2-98 (11/80)

T/C 34.11E

Q	S
Distribution:	
Project Records Center	Constr
Division Engineer	
T & I	
Pipe	

FILE ID #12800

Savannah River Plant
PRESSURE TEST REPORT

750259

Project 1780 AMO 8-1047 N/A Area S Bldg. No. 511-S & 221-S Dwg. W750136

Test Location: Shop N/A Field ✓ Service SDP

Fabrication: Pipe ✓ Tank N/A Equipment N/A Size 3" Material SS Hast.

Type Test: Hydro N/A Pneumatic ✓ Halide N/A Vacuum N/A

Test Medium: Water N/A Oil N/A Air ✓ Freon & Nitrogen N/A Vacuum N/A

Location: From Low Point Pump P. + Nor 5 Point (9) To 221-S in Canyon Nor 304 Point (4)

Line No. SDP 25

Actual Test Pressure: 15 psig Vacuum N/A Actual Length of Test 30 min.

Special Instructions: Ref. Safety Procedure No. 52 - T&I S.I. T&I 5

(Protection: Safety, Blank Offs, Etc.)

Acceptance Criteria: Test Pressure 15 psig Time (Minimum 15 min. or as req.) Vacuum N/A

Per Spec. 4482 P-Code P.224A Dwg. N/A Teletype No. N/A Local Design N/A

Remarks Test Accepted With No Leakage Weld were Bubble Leak Tested

Gauge CDS No. 3613 Expires 10-82

Test Requested by Don Sink (Div. Eng.) per _____ (Area Eng.)

	Name	Title
Test Accepted by: Testing & Inspection	D S Hays	T & I
Craft Foreman	William E Posey	Pipe
Operations*		

Date 6-29-82

* Optional

Test Report No. 171
Facility Segment 34.11E

ASR 4-128
Rev. 8/84
File ID #9830

"O" ☐ "S" ☑
Distribution:
Project Records Center-Constr

INCREMENT LEAK TESTS
(FIELD PIPING)

PROJECT: 1780 AREA: 5

DRAWING NOS: W761598, W761599, W761600, _____

ORIGINAL REPORT WITH MK-F

SYSTEM: SLUDGE PROCESS

TEST DATA

	Type of Test					Line			CDS			QC	Da
	Hydro	Halide	Other	Pipe	Core	No.	From	To	No.	Pressure	Time	Inspector	Ac
FACILITY SEGMENT 3	✓			JACKET ✓ 10"		SDP	37	40	29B	128 PSIG	30 min	JAB	7/8
	✓				✓	PCP4 RCZ20	44	43	12-86 53B	385 PSIG	30 min	EWT	PM 7-11
34.11D		✓			✓	PCP4 RCZ20	44	43	92B 11-86 934	15 PSIG	30 min	EWT	AM 7-11
		✓			✓	SDP10 SDP11	45	46	928-11/86 934	15 PSIG	30 min	BMB	7/14
	✓				✓	SDP10 SDP11	45	46	53B 12/86	385 PSIG	30 min	BMB	7/14
	✓			JACKET 12" 6"/10"		RCZ	47	48	29B 1/87	128 PSIG	30 min	BMB	7/16
		✓			✓	SDP10 SDP11	46	44	928 11-86	15 PSIG	30 min	GRL	7-1
	✓				✓	SDP10 SDP11	45	41	53B 12-86	385 PSIG	30	GRL	7-1
	✓			JACKET 6"/10"/12"		SDP10 SDP11	45	49	53B 12/86	128 PSIG	30 min	BMB	7/1
		✓			✓	SDP24 SDP25	50	41	231B 12/86 934 11/86	15 PSIG	30 min	BMB	7/2
	✓				✓	SDP24 SDP25	50	41	53B 12/86	375 PSIG	30 min	BMB	7/2
34.11E		✓			✓	PCP9 RCZ4	51	39	281B 12/86 934 11/86	15 PSIG	30 min	BMB	7/2
	✓				✓	PCP9 RCZ4	51	39	53B 12/86	375 PSIG	30 min	BMB	7/2
	✓			JACKET 10"		SDP	50	41	29B 1/87	125 PSIG	30 min	BMB	7/2
	✓			JACKET 10"		RCZ	51	39	29B 1/87	125 PSIG	30 min	BMB	7/2
		✓			✓	PCP9	1	2	928 11-86 934 11-86	15 PSIG	30 min	BMB	7/3
	✓				✓	PCP9	1	2	126B 10/86	380 PSIG	30 min	BMB	
		✓			✓	PEN 171	3	4	928 11/86 934 11/86	15 PSIG	30 min	BMB	7/4

COMMENTS: _____

F-3079-127

F.S. 34.11 B

MORRISON KNUDSEN

HYDROPNEUMATIC TEST RECORD

"Q" ☐ "S" ☒
Distribution:
Project Records Center-Constr.

Test Boundaries Ref Dwg D194007 Rev2 To EL 290'6"

Project No. 51780 Test No. HTR21 Location DWPF VS011 Date of Test 11-20-84

System Name Inter Area Transfer Piping

Spool/Mark # of Piping/Vessel PEN 171-P211-6" Dwg. # & Rev. D194007Rev2

Applicable Specification Number P-3/P211 P-1 + PIP 007 Rev 1

Material to be Tested 316L Stainless Test Medium Used H_2O

Max. Chloride Allowed 250PPA Results of Most Recent Chloride Test 1PPM Date Performed 10-2-84 ~~ppm~~

Max./Min Test Press. Allowed 375/375 PSIG Act. Test Press. 375 PSIG

Temperature of:

Medium 60 °F Material 58 °F Atmospheric 51 °F

Test Gage:

Serial # MK 042 MK 041 Cal. Date 9-11-84 9-11-84 Re-Cal Due Date 3-85 3-85

Req'd Exam. Press. 250 PSIG Actual Exam Press. 255 PSIG

Start Time 10.43 AM Complete Time 11:00 AM

INFORMATION ONLY

Test Results (Acceptable/Unacceptable)

M. Hendricks Level II 11-20-84
Signature/Date
QC Inspector

DMF 5/16/89

Remarks:
N/A

M. Hendricks Level II 11-20-84
QC Acceptance Date

WFB Jane Polley 4/17/86
Reviewed By Date

ASR# 15-64
FILE ID 26033

[illegible] 1989

F-3079-127

F.S. 34.11 B

MORRISON KNUDSEN

HYDROPNEUMATIC TEST RECORD

Distribution: Project Records Center-Constr.

Test Boundaries Ref Dwg D194007 Rev2 To EL 290'6"

Project No. 51780 Test No. HTR21 Location DWPF V5011 Date of Test 11-20-84

System Name Inter Area Transfer Piping

Spool/Mark # of Piping/Vessel PEN 171-P211-6" Dwg. # & Rev. D194007 Rev2

Applicable Specification Number P-3/P211 P-1 + PIP 007 Rev 1

Material to be Tested 316L Stainless Test Medium Used H_2O

Max. Chloride Allowed 250 PPM Results of Most Recent Chloride Test 1 PPM Date Performed 10-2-84 ~~ppm~~

Max./Min Test Press. Allowed 375/375 PSIG Act. Test Press. 375 PSIG

Temperature of:

Medium 60 °F Material 58 °F Atmospheric 51 °F

Test Gage:

Serial # MK 042 MK 041 Cal. Date 9-11-84 9-11-84 Re-Cal Due Date 3-85 3-85

Req'd Exam. Press. 250 PSIG Actual Exam Press. 255 PSIG

Start Time 10.43 AM Complete Time 11:00 AM

INFORMATION ONLY

Test Results (Acceptable/Unacceptable)

M. Hendricks Level II 11-20-84
Signature/Date
QC Inspector

DMF 5/16/89

Remarks:
N/A

M. Hendricks Level II 11-20-84
QC Acceptance Date

WFB Jane Polley 4/17/86
Reviewed By Date

ASR# 15-64
FILE ID 26033

RECEIVED MAY 17 1989

F-3079-127

Last

F.S. 34.11 B

MORRISON KNUDSEN

HYDROPNEUMATIC TEST RECORD

Distribution: Project Records Center-Constr.

Test Boundaries Ref Dwg D194007 Rev2 To EL 290½"

Project No. 51780 Test No. HTR21 Location DWPF VS011 Date of Test 11-20-84

System Name Inter Area Transfer Piping

Spool/Mark # of Piping/Vessel PEN 171-P211-6" Dwg. # & Rev. D194007 Rev2

Applicable Specification Number P-3/P211 P-1 + PIP 007 Rev 1

Material to be Tested 316L Stainless Test Medium Used H_2O

Max. Chloride Allowed 250 PPM Results of Most Recent Chloride Test 1 PPM Date Performed 10-2-84 ~~ppm~~

Max./Min Test Press. Allowed 375/375 PSIG Act. Test Press. 375 PSIG

Temperature of:

Medium 60 °F Material 58 °F Atmospheric 51 °F

Test Gage:

Serial # MK 042 MK 041 Cal. Date 9-11-84 9-11-84 Re-Cal Due Date 3-85 3-85

Req'd Exam. Press. 250 PSIG Actual Exam Press. 255 PSIG

Start Time 10.43 AM Complete Time 11:00 AM

INFORMATION ONLY

Test Results (Acceptable/Unacceptable)

M. Hendricks Level II 11-20-84
Signature/Date
QC Inspector

DMF 5/16/89

Remarks: N/A

M. Hendricks Level II 11-20-84
QC Acceptance Date

WFB Jane Polley 4/17/86
Reviewed By Date

ASR# 15-64
FILE ID 28033

RECEIVED MAY 17 1989

ASR 2-96 (11/80)

PART IV A TOP 34.11.E
ADDENDUM # 1

"Q" ☐	"S" ☑
Distribution:	
Project Records Center - Constr.	
Division Engineer	
T & I	
Pipe	

FILE ID #12800

Savannah River Plant
PRESSURE TEST REPORT

"INFORMATION ONLY"

Project 1780 AMO 8-1047 N/A Area 5 Bldg. No. 511-5 & 221-5 Dwg. W750257 W750136

Test Location: Shop N/A Field ✓ Service SDP

Fabrication: Pipe ✓ Tank N/A Equipment N/A Size 3" (cont.) Material S/S

Type Test: Hydro ✓ Pneumatic N/A Halide N/A Vacuum N/A

Test Medium: Water ✓ Oil N/A Air N/A Freon & Nitrogen N/A Vacuum N/A

Location: From Low Point Pump Pit Noz 4 Point (1) To 221-5 in Canyon Noz 301 Point (2)

Line No. SDP 24

Actual Test Pressure: 380 psig Vacuum N/A Actual Length of Test 20 min.

Special Instructions: Ref. Safety Procedure No. 52 - T&I S.I. T&I 5

(Protection: Safety, Blank Offs, Etc.)

Acceptance Criteria: Test Pressure 375 psig Time (Minimum 15 min. or as req.) Vacuum N/A

Per Spec. N/A P-Code N/A Dwg. N/A Teletype No. N/A Local Design ✓

Remarks Test Accepted with no Leakage Test per Project [illegible] Index

Gauge CDS No. 600 Expires 12-82

Test Requested by Don Sink (Div. Eng.) per _____ (Area Eng.)

	Name	Title
Test Accepted by: Testing & Inspection	D. S. Hays	T & I
Craft Foreman	Willie M. E. [illegible]	Pipe
Operations*		

Date 7-1-82

* Optional

ASR 2-98 (11/80)

PART IV A TOP 34.11E
ADDENDUM #2

"Q"	"S"
Distribution:	
Project Records Center - Constr	
Division Engineer	
T & I	
Pipe	

FILE ID #12800

Savannah River Plant
PRESSURE TEST REPORT

Project 1780 AMO 8-1047 N/A Area S Bldg. No. 221-S & 511-S Dwg. W750040 W750259

Test Location: Shop N/A Field ✓ Service PCP

Fabrication: Pipe ✓ Tank N/A Equipment N/A Size 3" Material 1/8 Hot

Type Test: Hydro ✓ Pneumatic N/A Halide N/A Vacuum N/A

Test Medium: Water ✓ Oil N/A Air N/A Freon & Nitrogen N/A Vacuum N/A

Location: From Low Point Pump Pit No. 24 Point (3) To 221-S in Canyon No. 2 301 Point (4)

Line No. PCP 9 (Core)

Actual Test Pressure: 390 psig Vacuum N/A Actual Length of Test 30 min.

Special Instructions: Ref. Safety Procedure No. 52 - T&I S.I. T&I 5

(Protection: Safety, Blank Offs, Etc.)

Acceptance Criteria: Test Pressure 375 psig Time (Minimum 15 min. or as req.) Vacuum N/A

Per Spec. N/A P-Code N/A Dwg. N/A Teletype No. N/A Local Design ✓

Remarks Test Accepted With No Leakage; Test per Product [illegible] Index

Gauge CDS No. 506 Expires 10 87

Test Requested by Don Sink (Div. Eng.) per _____ (Area Eng.)

	Name	Title
Test Accepted by: Testing & Inspection	D S Hayo	T&I
Craft Foreman	Will [illegible]	Pipe
Operations*		

Date 7-13-87

* Optional

ASR 2-38 (11/80)

PART IV A TOP3411E
ADDENDUM #3

"Q" ☐	"S" ☑
Distribution:	
Project Records Center - Constr.	
Division Engineer	
T & I	
Pipe	

FILE ID #12800

Savannah River Plant
PRESSURE TEST REPORT

W750137
W750040

Project 1280 AMO 8-1047 N/A Area S Bldg. No 511 [illegible] Dwg. W750259

Test Location: Shop N/A Field ✓ Service RCZ

Fabrication: Pipe ✓ Tank N/A Equipment N/A Size 3" Material 3/8 H.[illegible]

Type Test: Hydro ✓ Pneumatic N/A Halide N/A Vacuum N/A

Test Medium: Water ✓ Oil N/A Air N/A Freon & Nitrogen N/A Vacuum N/A

Location: From Low Point Pump Pit No. 4 Point ① To 221 S in Canyon No. 300 Point ②

Line No. RCZ 4 (core)

Actual Test Pressure: 310 psig Vacuum N/A Actual Length of Test 30 min.

Special Instructions: Ref. Safety Procedure No. 52 - T&I S.I. T&I 5

(Protection: Safety, Blank Offs, Etc.)

Acceptance Criteria: Test Pressure 375 psig Time (Minimum 15 min. or as req.) Vacuum N/A

Per Spec. N/A P-Code N/A Dwg. N/A Teletype No. N/A Local Design ✓

Remarks Test Accepted with No Leakage Test per Product and Service Index

Gauge CDS No. 506 Expires 10-87

Test Requested by Don Sink (Div. Eng.) per _____ (Area Eng.)

	Name	Title
Test Accepted by: Testing & Inspection	S S Hays	T&I
Craft Foreman	William F. Posey	Pipe
Operations*		

Date 7-11-87

* Optional

ASR 2-98 (11/80)

PART IV A TOP 34 11E
ADDENDUM #4

"Q" ☐	"S" ☑
Distribution:	
Project Records Center - Constr.	
Division Engineer	
T & I	
Pipe	

FILE ID #12800

Savannah River Plant
PRESSURE TEST REPORT

W750259
W750137
W750010

Project 1780 AMO 8-1047 N/A Area 5 Bldg. No. [illegible] Dwg.

Test Location: Shop N/A Field ✓ Service RCZ (Jacket)

Fabrication: Pipe ✓ Tank N/A Equipment N/A Size 10", 6" ½ Material [illegible]

Type Test: Hydro ✓ Pneumatic N/A Halide N/A Vacuum N/A

Test Medium: Water ✓ Oil N/A Air N/A Freon & Nitrogen N/A Vacuum N/A

Location: From [illegible] Point (5) To Termination Point (6)

Line No. RCZ [illegible]

Actual Test Pressure: 130 psig Vacuum N/A Actual Length of Test [illegible] min.

Special Instructions: Ref. Safety Procedure No. 52 - T&I S.I. T&I 5

(Protection: Safety, Blank Offs, Etc.)

Acceptance Criteria: Test Pressure 125 psig Time (Minimum 15 min. or as req.) Vacuum N/A

Per Spec. N/A P-Code N/A Dwg. N/A Teletype No. N/A Local Design ✓

Remarks [illegible] Test Per IDM #733

Gauge CDS No. 31B Expires 11-87

Test Requested by Don [illegible] per _____
Div. Eng. Area Eng.

	Name	Title
Test Accepted by: Testing & Inspection	[illegible]	T&I
Craft Foreman	[illegible]	PIPE
Operations*		

Date 7-23-82

* Optional

ASR 2-93 (11/80)

PART IV A TOP 3411E
ADDENDUM # 5

"Q" ☐	"S" ☑
Distribution:	
Project Records Center - Constr.	
Division Engineer	
T & I	
Pipe	

FILE ID #12800

Savannah River Plant
PRESSURE TEST REPORT

Project 1780 AMO 8-1047 N/A Area S Bldg. No. [illegible] Dwg. [illegible]

Test Location: Shop N/A Field ✓ Service SDP

Fabrication: Pipe ✓ Tank N/A Equipment N/A Size 10", 6" ½ Material [illegible]

Type Test: Hydro ✓ Pneumatic N/A Halide N/A Vacuum N/A

Test Medium: Water ✓ Oil N/A Air N/A Freon & Nitrogen N/A Vacuum N/A

Location: From Low Point Pump Pit No. 2 Point (5) To Termination Point (6)

Line No. SDP Jacket Pipe 166 167 [illegible]

Actual Test Pressure: 130 psig Vacuum N/A Actual Length of Test 60 min.

Special Instructions: Ref. Safety Procedure No. 52 - T&I S.I. T&I 5

(Protection: Safety, Blank Offs, Etc.)

Acceptance Criteria: Test Pressure 125 psig Time (Minimum 15 min. or as req.) Vacuum N/A

Per Spec. N/A P-Code N/A Dwg. N/A Teletype No. N/A Local Design ✓

Remarks Test Accepted With No Leakage, Test Per IDM # 433

Gauge CDS No. 31B Expires 11-87

Test Requested by Don Sick (Div. Eng.) per _____ (Area Eng.)

	Name	Title
Test Accepted by: Testing & Inspection	D S Hoyt	T & I
Craft Foreman	W. R. Landers	PIPE
Operations*		

Date 7-23-87

* Optional

ASR - 8 (11/80)

PART IV A TOP 34.11E

ADDENDUM # ~~5~~ 6

"Q" ☐	"S" ☑
Distribution:	
Project Records Center - Constr.	
Division Engineer	
T & I	
Pipe	

FILE ID #12800

Savannah River Plant
PRESSURE TEST REPORT

Project 1780 AMO 8-1047 N/A Area 5 Bldg. No. 511-[illegible] Dwg. W750256 W750254

Test Location: Shop N/A Field ✓ Service SDP

Fabrication: Pipe ✓ Tank N/A Equipment N/A Size 3" (core) Material [illegible]

Type Test: Hydro ✓ Pneumatic N/A Halide N/A Vacuum N/A

Test Medium: Water ✓ Oil N/A Air N/A Freon & Nitrogen N/A Vacuum N/A

Location: From Low Point Pump Pit No. 5 Point (3) To 221-S in Canyon No. 304 Point (4)

Line No. SDP 25

Actual Test Pressure: 3[illegible] Vacuum N/A Actual Length of Test [illegible] min.

Special Instructions: Ref. Safety Procedure No. 52 - T&I S.I. T&I 5

(Protection: Safety, Blank Offs, Etc.)

Acceptance Criteria: Test Pressure 3[illegible] Time (Minimum 15 min. or as req.) Vacuum N/A

Per Spec. N/A P-Code N/A Dwg. N/A Teletype No. N/A Local Design ✓

Remarks Test Accepted with No Leakage Test per Product & Service Index

Gauge CDS No. [illegible] Expires [illegible]

Test Requested by Don Sink (Div. Eng.) per _____ (Area Eng.)

	Name	Title
Test Accepted by: Testing & Inspection	D.S. Hays	T&I
Craft Foreman	William E Posey	Pipe
Operations*		

Date 7-2-87

* Optional

INFORMATION ONLY 34.11e

QA PKG # 108

Distribution

MK-FERGUSON

HYDRO / PNEUMATIC TEST RECORD

Report No. [illegible]

Test Date [illegible]

Procedure No. [illegible]

PROJECT / AMO 1780 DA 5550 AREA /BLDG. No. 05UG

DWG. / REV. DCF4498 R/2

Type Test: ☐ Hydro ☒ Pneumatic ☐ Halide ☐ Vacuum ☐ Helium

P.P. 71R Pg 1 of 3

Test Medium: ☐ Water ☐ Oil ☒ Air ☐ Freon & Nitrogen ☐ Helium

F/S 45.31C 34.11e

Test Boundaries: PEN170ZA-R0 AND D194008-R8

ACCEPTANCE CRITERIA:

Required Time ☐ ~~10 minutes~~ 30 MINUTES

Required Test Pressure 20 PSI

Other: N/A

Per P-Code P224A / P226

Other: N/A

Pre-Hydro Walkdown complete W.R. [illegible] Date: [illegible]-89

Quality Pre-Hydro Walkdown complete [illegible] L II Date: 11-18-89

INFORMATION ONLY

Actual Test Pressure 21 PSI

Actual Length of Test 40 min.

M. & T. E.: CDS No. 305 A

Re-Cal Due Date 12/89

Test Results: ☒ Acceptable ☐ Unacceptable

REMARKS:

BUBBLE LEAK TEST OF CORE PIPING PER IDM PD875

TEST ALSO TO COVER NOZZLE WELD ON PEN 170.

FWs 1, 2, 5 & NOZZLE Weld were Inspected on this Test.

[illegible] L II 11-18-89

[illegible] 11/22/89

A

[illegible] L II 11-18-89

QC Acceptance Date Reviewed By Date

ASR 15-64 (6-88) Rev 5 ID 26033

F-127 Rev 6 (6-88)

RECEIVED NOV 27 1989

Q" "S"
Distribution

QA PKG # 103-I4

PAGE 1 of 3

MK-FERGUSON TG II
A HORNSON & HUDSON COMPANY 11-18-89

HYDRO / PNEUMATIC TEST RECORD

Report No. 81-11-18-89-12
Test Date 11-18-89
Procedure No. MKSP 600 RHC

PROJECT / AMD 1780 DA S550 AREA /BLDG. No. DSUG

DWG. / REV. DCP 4498 R/2

Type Test: ☒ Hydro ☐ Pneumatic ☐ Halide ☐ Vacuum ☐ Helium

P.P. 71R Pen 2 of 3

Test Medium: ☒ Water ☐ Oil ☐ Air ☐ Freon & Nitrogen ☐ Helium

Test Boundaries: PEN 170 ZA-R07 / D194008-K8

F/S 34.11e

ACCEPTANCE CRITERIA:

Required Time ☐ ~~10 minutes~~ 11-18-89 15 MINUTES

Required Test Pressure 375 PSI

Other: N/A

Per P-Code P224A / P226

Other: N/A

Pre-Hydro Walkdown complete [signature] Date: 11-15-89

Quality Pre-Hydro Walkdown complete [signature] LII Date: 11-18-89

Actual Test Pressure 394 PSI

Actual Length of Test 20 min.

M. & T. E.:
CDS No. 574 A

Re-Cal Due Date 2/90

INFORMATION ONLY

Test Results: ☒ Acceptable ☐ Unacceptable

REMARKS:

HYDRO TEST OF CORE PIPING. TEST ALSO TO COVER NOZZLE WELD ON PEN 170

FW's 1, 2, 5 & Nozzle Face Welds Inspected on this Test. Test was Filled @ Point 1 & Isolated @ Point 2. [signature] LII 11-18-89

[signature] 11-22-89

N/A

[signature] LII
QC Acceptance

11-18-89
Date

[signature] LII
Reviewed By

11-20-89
Date

ASR 15-64 (6-88) Rev 5 ID 26033

F-127 Rev 6 (6-88)

RECEIVED NOV 27 1989

Distribution	PAGE 1 of 5 QA PKC 67-N1	MK-FERGUSON	Report No. 81-111889-09
			Test Date 11-18-89
		HYDRO / PNEUMATIC TEST RECORD	Procedure No. MKCP 600 R1 IC

PROJECT / AMO 1780 DA 5550 AREA /BLDG. No. OSUG

DWG. / REV. PCP9AH-R1 / PCP46B-R0 / PCP41C-R1 / D194010-R7

Type Test: ☒ Hydro ☐ Pneumatic ☐ Halide ☐ Vacuum ☐ Helium P.P. 71K Pt 2 of 3

Test Medium: ☒ Water ☐ Oil ☐ Air ☐ Freon & Nitrogen ☐ Helium F/S 34.11e

Test Boundaries: SEE REMARKS BELOW

ACCEPTANCE CRITERIA: 11-18-89

Required Time ~~15 minutes~~ 15 MINUTES Required Test Pressure 375 PSI

Other: N/A

Per P-Code P224A / P220 Other: N/A

Pre-Hydro Walkdown complete [signature] Date: 11-18-89

Quality Pre-Hydro Walkdown complete [signature] L II Date: 11-18-89

INFORMATION ONLY

Actual Test Pressure 394 PSI Actual Length of Test 20 min.

M. & T. E.: CDS No. ~~547-A~~ 574-A Re-Cal Due Date 2/90

Test Results: ☒ Acceptable ☐ Unacceptable

REMARKS: HYDRO TEST OF CORE PIPING.
TEST TO COVER FW1 ON SKETCH PCP46B.
THIS IS LAST TIE-IN WELD TO EXISTING PIPE.
REF: DCF 4498
TEST ALSO TO COVER NOZZLE WELD ON PEN 168.

FW's 6, 7 R11 & NOZZLE FACE Weld INSPected under this Test. Test WAS Filled @ Point 1 & Isolated @ Point 2 [signature] L II 11-18-89

[signature] 11-22-89
A

[signature] L II 11-18-89 [signature] L II 11-20-89

QC Acceptance Date Reviewed By Date

ASR 15-64 (6-88) Rev 5 ID 26033 F-127 Rev 6 (5-88)

RECEIVED NOV 27 1989

"C" Distribution	"S"

Page 95

QA PKG 67-M1

MK-FERGUSON
A MORRISON KNUDSEN COMPANY

HYDRO / PNEUMATIC TEST RECORD

Report No. [illegible]
Test Date [illegible]
Procedure No. [illegible]

PROJECT / AMO 1780 DA S550 AREA /BLDG. No. DSUG

DWG. / REV. PCP9AH-R1 / PCP46B-R0 / PCP46C-R1 / D194010-R7

Type Test: ☐ Hydro ☒ Pneumatic ☐ Halide ☐ Vacuum ☐ Helium P.P. 71K Part 1 of 3

Test Medium: ☐ Water ☐ Oil ☒ Air ☐ Freon & Nitrogen ☐ Helium F/S 34.11e

Test Boundaries: SEE REMARKS BELOW

ACCEPTANCE CRITERIA: Required Test Pressure 20 PSI

Required Time ☐ ~~15 minutes~~ 30 MINUTES Other: N/A

Per P-Code P224A / P226 Other: N/A

Pre-Hydro Walkdown complete [signature] Date: [illegible]

Quality Pre-Hydro Walkdown complete [signature] L II Date: 11-18-89

INFORMATION ONLY

Actual Test Pressure 21 PSI Actual Length of Test 40 min.

M. & T. E.:
CDS No. 305 A Re-Cal Due Date 12/89

Test Results: ☒ Acceptable ☐ Unacceptable

REMARKS: BUBBLE LEAK TEST OF CORE PIPING PER IDM PD 875.
THIS TEST TO COVER ~~FW1~~ FW 6 & 7 R1 ON SKETCH PCP46B.
THIS IS LAST TIE-IN WELDS TO EXISTING PIPE. 16-11-10-89
REF: DCP 4498
TEST ALSO TO COVER NOZZLE WELD ON PEN 168.

FW's 6, 7 R1 & Nozzle weld on Pen 168 covered under this Test. [signature] L II 11-18-89

[signature] 11-22-89

N/A

[signature] L II — QC Acceptance — 11-18-89 Date

[signature] L II — Reviewed By — 11-20-89 Date

ASR 15-64 (6-88) Rev 5 ID 26033 F-127 Rev 6 (6-88)

RECEIVED NOV 27 1989

"G" "S" Distribution

QA PKG# 67-69 MK-FERGUSON

HYDRO / PNEUMATIC TEST RECORD

Report No.
Test Date
Procedure No.

PROJECT / AMO 1780 DA 8550 AREA /BLDG. No. 0SUC

DWG. / REV. PCP47B-R4 / PCP47C-R1 / PCP47A-R1 / D194009-R7

Type Test: ☐ Hydro ☒ Pneumatic ☐ Halide ☐ Vacuum ☐ Helium PP 71F Pre-Hyd

Test Medium: ☐ Water ☐ Oil ☒ Air ☐ Freon & Nitrogen ☐ Helium F/S 34.1e

Test Boundaries: SEE REMARKS BELOW

ACCEPTANCE CRITERIA:

Required Time ☐ ~~10 minutes~~ 30 MINUTES

Required Test Pressure 20 PSI

Other: N/A

Per P-Code P224A / P226

Other: N/A

Pre-Hydro Walkdown complete [signature] Date: 11-15-89

Quality Pre-Hydro Walkdown complete [signature] L II Date: 11-17-89

Actual Test Pressure 21 PSI

Actual Length of Test 40 min.

M. & T. E.: CDS No. 305 A

Re-Cal Due Date 12/89

INFORMATION ONLY

Test Results: ☒ Acceptable ☐ Unacceptable

REMARKS: BUBBLE LEAK TEST OF CORE PIPING. REF: IDM PD875

THIS TEST TO COVER FW11 OF SKETCH PCP 47C.

THIS IS LAST WELD TO TIE-IN WITH EXISTING

PIPE. REF: DCP 4498

TEST ALSO TO COVER NOZZLE WELD ON PEN 169.

Test Inspected @ Tie In Weld (FW11) & Face of Nozzle.

Test was Filled @ Point 3. [signature] L II 11-~~18~~-89 1776 11-17-89

[initials] 11-22-89

N/A

[signature] L II 11-17-89 [signature] L II 11-20-89

QC Acceptance Date Reviewed By Date

ASR 15-64 (6-88) Rev 5 ID 26033 F-127 Rev 6 (6-88)

RECEIVED NOV 27 1989

DA PRC# 67-A2

MK-FERGUSON

HYDRO / PNEUMATIC TEST RECORD

Report No.
Test Date
Procedure No.

PROJECT / AMO 1780 DA 8550 AREA /BLDG. No. CSUG

DWG. / REV. PCP47B-R4 / PCP47C-R1 / PCP47A-R1 / DA4009-R7 4/8

Type Test: ☐ Hydro ☐ Pneumatic ☐ Halide ☐ Vacuum ☐ Helium PP.71 E PRT 2 of 3

Test Medium: ☐ Water ☐ Oil ☐ Air ☐ Freon & Nitrogen ☐ Helium F/S 34.11e

Test Procedures: SEE REMARKS BELOW

ACCEPTANCE CRITERIA:

Required Time: ☐ 40 minutes 15 MINUTES Required Test Pressure 375 PSI

Other: N/A

Per P-Code P220 / P220 Other: N/A

Pre-Hydro Walkdown complete [signature] Date: 11-15-89

Quality Pre-Hydro Walkdown complete [signature] LII Date: 11-18-89

Actual Test Pressure 394 Actual Length of Test 20 min.

M. & T. E.: CDS No. ~~547-A~~ 574-A Re-Cal Due Date 2/90

Test Results: ☒ Acceptable ☐ Unacceptable

REMARKS: HYDRO TEST OF CORE PIPING

TEST TO COVER FW 11 OF PCP47

THIS IS LAST WELD TO TIE-IN WITH EXISTING

PIPE. REF: DCF4498

TEST ALSO TO COVER NOZZLE WELD ON PEN 169

INFORMATION ONLY

Tested Between Points 1 & 2 with no leakage. [signature] LII 11-18-89

FW 11 & Nozzle Fillet Weld Inspected after this Test.

[signature] 11-22-89

[signature] LII
QC Acceptance

11-18-89
Date

[signature] LII
Reviewed By

11-20-89
Date

ASR 15-64 (6-88) Rev 5 ID 26033

F-127 Rev 6 (6-88)

RECEIVED NOV 27 1989

"Q" "S" Distribution	QA PKC# 67-L1	MK-FERGUSON A MORRISON KNUDSEN COMPANY	PAGE 1 OF 7	Report No. 113-112159-C2
		HYDRO / PNEUMATIC TEST RECORD		Test Date 11-21-89
				Procedure No. MKCP-600 R/C

PROJECT / AMO 1780 DA S550 AREA /BLDG. No. OSUG

DWG. / REV. PCP9AAA-R1 / PCP9AB-R2 / PCP9AC-R3 / PCP9AD-R3 / PCP9AG-R1 PCP9AE-R2 ~~PCP9~~ WRF 11-14-89

Type Test: ☒ Hydro ☐ Pneumatic ☐ Halide ☐ Vacuum ☐ Helium

Test Medulm: ☒ Water ☐ Oil ☐ Air ☐ Freon & Nitrogen ☐ Helium

P.P. 71E PRT 3 OF 3 F/S 34.11C

Test Boundaries: SEE REMARKS BELOW

INFORMATION ONLY

ACCEPTANCE CRITERIA: Required Test Pressure 125 PSI (PER IDM PD 785)

Required Time ☒ 10 minutes Other:

Per P-Code P51B Other:

Pre-Hydro Walkdown complete [signature] Date: 11-16-89

Quality Pre-Hydro Walkdown complete [signature] LII Date: 11-21-89

Actual Test Pressure 132 PSI Actual Length of Test 10 min.

M. & T. E.: CDS No. 547-A Re-Cal Due Date 7-27-89

Test Results: ☒ Acceptable ☐ Unacceptable

REMARKS: HYDRO TEST OF ALL JACKET WELDS MADE PER DCP 4498.

TEST FILLED AT LOW POINT PUMP PIT TO SALT CELL NOZZLE BOX. NO VISIBLE LEAKAGE.

[signature] LII 11-21-89

[signature] 11/28/89

[signature] LII 11-21-89 [signature] 11-27-89

QC Acceptance Date Reviewed By Date

ASR 15-64 (6-88) Rev 5 ID 26033 F-127 Rev 6 (6-88)

RECEIVED DEC 04 1989

"O" "S" Distribution

PAGE 1 of 4

MK-FERGUSON
A MORRISON KNUDSEN COMPANY

HYDRO / PNEUMATIC TEST RECORD

Report No.	81-112189-06
Test Date	11-21-89
Procedure No.	MKCP 6CD R1C

PROJECT / AMO 1780 DA 5550 AREA /BLDG. No. OSUG

DWG. / REV. PCP9AAA-R1 / PCP9AB-R2 / PCP9AC-R3 / PCP9AD-R3 / PCP9AG-R1 D194006-R8 / D198007-R7 PCP9AE-R2

Type Test: ☒ Hydro ☐ Pneumatic ☐ Halide ☐ Vacuum ☐ Helium

Test Medium: ☒ Water ☐ Oil ☐ Air ☐ Freon & Nitrogen ☐ Helium

P.P. 71E Par 2 of 3 FIS 34.11e.

Test Boundaries: SEE REMARKS BELOW

ACCEPTANCE CRITERIA: WJ 11-16-89

Required Time ~~☒ 10 minutes~~ 15 MINUTES Required Test Pressure 375 PSI

Other: N/A

Per P-Code P224A Other: N/A

Pre-Hydro Walkdown complete [signature] Date: 11-16-89

Quality Pre-Hydro Walkdown complete [signature] LII Date: 11-21-89

INFORMATION ONLY

Actual Test Pressure 394 PSI Actual Length of Test 25 min.

M. & T. E.: CDS No. 390 A Re-Cal Due Date 12/2/89

Test Results: ☒ Acceptable ☐ Unacceptable

REMARKS: HYDRO TEST OF CORE PIPING.
THIS TEST TO COVER FW6 OF SKETCH PCP9AAA
AND FW1 & 5 OF SKETCH PCP9AE. THESE ARE THE
LAST TIE-IN WELDS TO EXISTING PIPE.
REF: DCF4498
TEST ALSO TO COVER NOZZLE WELDS ON PENS ~~28~~ & 171. LII 11-21-89

Test was Filled & Pressurized @ Nozzle in Low Point Pump Pit & Tested To Nozzle Face Weld in Spc. Ref: Attached Sketches For Actual Welds Examined During Hydro. [signature] LII 11-21-89

11/28/89

QC Acceptance	Date	Reviewed By	Date
[signature] LII	11-21-89	[signature] LII	11-22-89

ASR 15-64 (6-88) Rev 5 ID 26033 F-127 Rev 6 (6-88)

RECEIVED

"Q"	"S"
Distribution	

PAGE 1 of 4

QA PKG # 67-I2

MK-FERGUSON
A MORRISON KNUDSEN COMPANY

HYDRO / PNEUMATIC TEST RECORD

Report No. 81-1120 89-10
Test Date 11-20-89
Procedure No. MKCP 600 R1 C

PROJECT / AMO 1780 DA 5550 AREA /BLDG. No. DSUG

DWG. / REV. PCP47B-R4 / PCP47C-R1 / PCP47A-R1

Type Test: ☒ Hydro ☐ Pneumatic ☐ Halide ☐ Vacuum ☐ Helium P.P. 71 F PRT. 3 DP 3

Test Medium: ☒ Water ☐ Oil ☐ Air ☐ Freon & Nitrogen ☐ Helium F/S 3471e

Test Boundaries: SEE REMARKS BELOW

ACCEPTANCE CRITERIA: 11-20-89
Required Time ☒ ~~10 minutes~~ 15 minutes
Per P-Code PSIB

Required Test Pressure 375 PSI PER DCF 4265
Other: N/A
Other: N/A

Pre-Hydro Walkdown complete [signature] Date: 11-15-89

Quality Pre-Hydro Walkdown complete [signature] LII Date: 11-20-89

Actual Test Pressure 394 PSI Actual Length of Test 20 min.

M. & T. E.: CDS No. 574 A Re-Cal Due Date 3/89

INFORMATION ONLY

Test Results: ☒ Acceptable ☐ Unacceptable

REMARKS: HYDRO TEST DP ALL JACKET WELDS MADE PER DCF 4498.

Tested Between Points 1 & 2 with no leakage. Ref Attached Dwg's For FW Inspected In this Test. Note: Pressure of 375 PSI was maintained on core During Hydro of Jacket. [signature] LII 11-20-89

11/28/89

N A

[signature] LII 11-20-89 [signature] 11-27-89

QC Acceptance Date Reviewed By Date

ASR 15-64 (6-88) Rev 5 ID 26033

F-127 Rev 6 (6-88)

RECEIVED [illegible]

"Q" "S"
Distribution

PAGE 1 of 2

QA PKG # 67-J1

MK-FERGUSON
A MORRISON KNUDSEN COMPANY

HYDRO / PNEUMATIC TEST RECORD

Report No. 81-112089-~~15~~16 VG II 11-20-89
Test Date 11-20-89
Procedure No. PIP 015 R/OB

PROJECT / AMO 1780 DA S550 AREA /BLDG. No. OSUG

DWG. / REV. PCP9AAA-R1/PCP9AB-R2/PCP9AC-R3/PCP9AD-R3/PCP9AG-R1 PCP9AE-R2

Type Test: ☐ Hydro ☒ Pneumatic ☐ Halide ☐ Vacuum ☐ Helium

VG II 11-20-89 ~~D194006-R8~~ / D194D07-R7

Test Medium: ☐ Water ☐ Oil ☒ Air ☐ Freon & Nitrogen ☐ Helium

Test Boundaries: SEE REMARKS BELOW

P.P. 71E PRT 1 of 3
F/S 34.11e

ACCEPTANCE CRITERIA:

Required Time ☐ ~~10 minutes~~ VG II 11-20-89 30 MINUTES

Required Test Pressure 20 PSI

Other: N/A

Per P-Code P224A

Other: N/A

Pre-Hydro Walkdown complete [signature] Date: 11-16-89

Quality Pre-Hydro Walkdown complete [signature] L II Date: 11-20-89

Actual Test Pressure 21 PSI

Actual Length of Test ____ min.

M. & T. E.:
CDS No. 305 A

Re-Cal Due Date 12/89

INFORMATION ONLY

Test Results: ☒ Acceptable ☐ Unacceptable

REMARKS: BUBBLE LEAK TEST OF CORE PIPING. REF: IDM PD875.
THIS TEST TO COVER FW6 OF SKETCH PCP9AAA
AND FW1 OF SKETCH PCP9AE. THESE ARE THE LAST
TIE-IN WELDS TO EXISTING PIPE.
REF: DCF 4498.
TEST ALSO TO COVER NOZZLE WELDS ON PENS ~~28~~ VG II 11-20-89 & 171.

Tested Between Points 1 & 2 with no leakage: This Test Includes
FW 1, 5, 6 & Nozzle Face Weld of ~~No~~ VG II 11-20-89 Pen 171. [signature] L II 11-20-89

[signature] 11/28/89

[signature] L II
QC Acceptance

11-20-89
Date

[signature] L II
Reviewed By

11-27-89
Date

ASR 15-64 (6-88) Rev 5 ID 26033

F-127 Rev 6 (6-88)

RECEIVED DEC 04 1989

"Q" DNF "S" Distribution	QA-PKG-108-H#6 DNF 11-28-89	PAGE 1 of 3 MK-FERGUSON A MORRISON KNUDSEN COMPANY	Report No. 81-111889-04
		HYDRO / PNEUMATIC TEST RECORD	Test Date 11-18-89
			Procedure No. PIP 015 R/OB

PROJECT / AMO 1780 DA S550 AREA /BLDG. No. 05UG

DWG. / REV. DCF4498 R/2

Type Test: ☐ Hydro ☒ Pneumatic ☐ Halide ☐ Vacuum ☐ Helium

P.P. 71R Prs 1 of 3 TG II 11-17-89

Test Medium: ☐ Water ☐ Oil ☒ Air ☐ Freon & Nitrogen ☐ Helium

F/S 45.31C 34.11C

Test Boundaries: PEN170ZA-R0 AND D194008-R8

ACCEPTANCE CRITERIA:

Required Time ☐ ~~10 minutes~~ TG II 11-18-89 30 MINUTES

Required Test Pressure 20 PSI

Other: N/A

Per P-Code P224A / P226

Other: N/A

Pre-Hydro Walkdown complete W.R. [signature] Date: 11-15-89

Quality Pre-Hydro Walkdown complete [signature] L II Date: 11-18-89

Actual Test Pressure 21 PSI

...th of Test 40 min.

...ON ONLY

M. & T. E.: CDS No. 305 A

Test Results: ☒ Acceptable ☐ Unaccept

REMARKS:

BUBBLE LEAK ... IDM PD875

TEST ALSO T... EN 170.

FW's 1, 2, 5 & NOZZle Weld w...

Supercedes previous test (copy) QA Test # Changed DNF 11/28/89

L II 11-18-89

DNF 11/28/89

A

[signature] L II 11-18-89

QC Acceptance Date Reviewed By Date

ASR 15-64 (6-88) Rev 5 ID 26033

F-127 Rev 6 (6-88)

RECEIVED DEC 0 4 1989

"Q" "S" Distribution

QA PKG 108-I4 6 DWK 11-23-89

PAGE 1 of 3

MK-FERGUSON VG II 11-18-89

A MORRISON KNUDSEN COMPANY

HYDRO / PNEUMATIC TEST RECORD

Report No. 81-11-18-89-10
Test Date 11-18-89
Procedure No. MKCP 600 R1C

PROJECT / AMO 1780 DA S550 AREA /BLDG. No. OSUG

DWG. / REV. DCF 4498 R/2

Type Test: ☒ Hydro ☐ Pneumatic ☐ Halide ☐ Vacuum ☐ Helium

P.P. 71R Pet 2 of 3

Test Medium: ☒ Water ☐ Oil ☐ Air ☐ Freon & Nitrogen ☐ Helium

F/S 34 11e

Test Boundaries: PEN170 ZA-R0 / D194008-K8

ACCEPTANCE CRITERIA:

Required Time ☐ ~~10 minutes~~ 15 MINUTES

Required Test Pressure 375 PSI

Other: N/A

Per P-Code P224A / P226

Other: N/A

Pre-Hydro Walkdown complete [signature] Date: 11-15-89

Quality Pre-Hydro Walkdown complete [signature] LII Date: 11-18-89

INFORMATION ONLY

Actual Test Pressure 394 PSI

Actual Length of Test 20 min.

M. & T. E.: - CDS No. 574 A

Re-Cal Due Date 2/90

Test Results: ☒ Acceptable ☐ Unacceptable

REMARKS:

HYDRO TEST OF CORE PIPING. TEST ALSO TO COVER NOZZLE WELD ON PEN 170

FW's 1, 2, 5 & NOZZLE FACE Welds INSPected on this Test. Test WAS Filled @ Point 1 & Isolated @ Point 2. [signature] LII 11-18-89

[signature] 11/29/89

N A

[signature] LII
QC Acceptance

11-18-89
Date

[signature] LII
Reviewed By

11-20-89
Date

ASR 15-64 (6-88) Rev 5 ID 26033

F-127 Rev 6 (6-88)

RECEIVED DEC 04 1989

"Q" "S" Distribution	[redacted]	PAGE 1 of 3 MK-FERGUSON A MORRISON KNUDSEN COMPANY	Report No. 81-112089-12
			Test Date 11-20-89
		HYDRO / PNEUMATIC TEST RECORD	Procedure No. MKCP 600 R/K

PROJECT / AMO 1780 DA S550 AREA /BLDG. No. OSUG

DWG. / REV. PCP9AH-R1 / PCP46B-R0 / PCP46C-R1

Type Test: ☒ Hydro ☐ Pneumatic ☐ Halide ☐ Vacuum ☐ Helium P.P. ~~122A~~ 11-17-89 PRT 3 of 3

Test Meduim: ☒ Water ☐ Oil ☐ Air ☐ Freon & Nitrogen ☐ Helium 71K 11-17-89 F/S 34.11e

Test Boundaries: SEE REMARKS BELOW

ACCEPTANCE CRITERIA: Required Test Pressure 375 PSI PER DCF-4265

Required Time ☒ 10 minutes N/A Other: N/A

Per P-Code P51B Other: N/A

Pre-Hydro Walkdown complete W.R. [signature] Date: 11-15-89

Quality Pre-Hydro Walkdown complete [signature] L II Date: 11-20-89

Actual Test Pressure 394 PSI Actual Length of Test 15 min.

M. & T. E.: CDS No. 574 A Re-Cal Due Date 2/90

Test Results: ☒ Acceptable ☐ Unacceptable

REMARKS: HYDRO TEST OF ALL JACKET WELDS MADE PER DCF 4498.

INFORMATION ONLY

Test Filled @ Point 1 & Inspected To Point 2 Ref Attached Sketches For Welds Inspected In Test. 375 PSI WAS Maintained on Core During Test. [signature] L II 11-20-89

No Leakage

[signature] 11/28/89

[signature] L II 11-20-89 [signature] L II 11.27.89

QC Acceptance Date Reviewed By Date

ASR 15-64 (6-88) Rev 5 ID 26033 F-127 Rev 6 (6-88)

RECEIVED DEC 04 1989

"Q" "S"
Distribution

QA PKG # 108-346 DF 11/28/89

PAGE 1 of 2

MK-FERGUSON
A MORRISON KNUDSEN COMPANY

HYDRO / PNEUMATIC TEST RECORD

Report No. 81-112089-14
Test Date 11-20-89
Procedure No. MKCP 600 R1 C

PROJECT / AMO 1780 DA 5550 AREA /BLDG. No. 05UG

DWG. / REV. DCF 4498 R2

Type Test: ☒ Hydro ☐ Pneumatic ☐ Halide ☐ Vacuum ☐ Helium

P.P. 71R Pet 3 of 3

Test Meduim: ☒ Water ☐ Oil ☐ Air ☐ Freon & Nitrogen ☐ Helium

Test Boundaries: PEN 170 ZA-R-O

FIS 34.11e

ACCEPTANCE CRITERIA:

Required Time ☒ 10 minutes N/A

Required Test Pressure 375 PSI PER DCF 4265

Other: N/A

Per P-Code P51B

Other: N/A

Pre-Hydro Walkdown complete [signature] Date: 11-15-89

Quality Pre-Hydro Walkdown complete [signature] L II Date: 11-20-89

Actual Test Pressure 394 PSI

Actual Length of Test 2[illegible] min.

M. & T. E.:
CDS No. 574 A

Re-Cal Due Date 2/90

INFORMATION ONLY

Test Results: ☒ Acceptable ☐ Unacceptable

REMARKS:

HYDRO TEST OF ALL JACKET WELDS MADE PER DCF 4498

Tested Between Points 1 & 2 with no leakage. FW'S 3, 4, 6 & 9 WERE INSPECTED under this Test. Pressure of 375 PSI WAS Maintained ON CORE DURING HYDRO of JACKET [signature] L II 11-20-89

[signature] 11/20/89

[signature] L II
QC Acceptance

11-20-89
Date

[signature] L II
Reviewed By

11-27-89
Date

ASR 15-64 (6-88) Rev 5 ID 26033

F-127 Rev 6 (6-88)

RECEIVED DEC 04 1989

Report No. 42-060881-[illegible]
Test Date 6-8-89
Procedure No. NDE-07 R/OA
PAGE 1 OF 2

Distribution "S"

INFORMATION ONLY

MK-FERGUSON

HYDRO / PNEUMATIC TEST RECORD

PROJECT / AMO 1780 DA 5550 AREA /BLDG. No. OSUG

DWG. / REV. PCP9AB R1

P/P # 71H QA 67-L
F/S-34.11e
PART 1 OF 3
CORE

Type Test: ☐ Hydro ☒ Pneumatic ☐ Halide ☐ Vacuum ☐ Helium

Test Medium: ☐ Water ☐ Oil ☒ Air ☑ Freon & Nitrogen ☐ Helium

Test Boundaries: SEE LISTED ABOVE

Required Test Pressure 20 ± 5 psi

ACCEPTANCE CRITERIA:

Required Time ☒ 10 minutes Other:

Per P-Code P224A Other:

Pre-Hydro Walkdown complete Chuck Roberts Date: 6/6/89

Quality Pre-Hydro Walkdown complete Ray Mayer Date: 6-8-89

Actual Test Pressure 22 p.s.i. Actual Length of Test 20 min.

M. & T. E.: CDS No. 448 A Re-Cal Due Date 8-89

Test Results: ☑ Acceptable ☐ Unacceptable

REMARKS: REF: DCF 3521 FOR REWORK
NO VISIBLE LEAKAGE Ray II 6-8-89

PCP-9 DCF 6.15.89

INFORMATION ONLY

Ray Mayer II 6-8-89 B Brown III 6.98

QC Acceptance Date Reviewed By Date

F-127 Rev 6

ASR 15-64 (6-88) Rev 5 ID 26033

RECEIVED JUN 15 1989

"Q"	"S"
Distribution	

MK-FERGUSON

HYDRO / PNEUMATIC TEST RECORD

Report No. 42-060989-04
Test Date 6-9-89
Procedure No. MKCP 600 R/C
PAGE 1 OF 2

PROJECT / AMO 1780 DA 5550 AREA /BLDG. No. 05U6.

DWG. / REV. PCP 9C R1

P/P# 71I
F/S-34.11e
PART 2 OF 3
QA PKG 67P

Type Test: ☒ Hydro ☐ Pneumatic ☐ Halide ☐ Vacuum ☐ Helium

Test Medium: ☒ Water ☐ Oil ☐ Air ☐ Freon & Nitrogen ☐ Helium

Test Boundaries: SEE ISO LISTED ABOVE

ACCEPTANCE CRITERIA:

Required Test Pressure 375 PSI

Required Time ☒ ~~10 minutes~~ 15 MINUTES (cc 6/9/89) Other:

Per P-Code P224A Other:

Pre-Hydro Walkdown complete [signature] Date: 6/8/89

Quality Pre-Hydro Walkdown complete [signature] Date: 6-9-89

Actual Test Pressure 399 PSI Actual Length of Test 17 min.

M. & T. E.: CDS No. 571-A Re-Cal Due Date 9-8-89

Test Results: ☑ Acceptable ☐ Unacceptable

REMARKS: REF: DCF 3521 FOR REWORK
NO VISIBLE LEAKAGE [initials] 6-9-89

PCP 9 - Tested per DCF
[initials] 6/13/89

INFORMATION ONLY

[signature] II 6-9-89 [signature] III 6-12-89

QC Acceptance Date Reviewed By Date

F-127 Rev 6 (6-8

ASR 15-64 (6-88) Rev 5 ID 26033

RECEIVED [illegible]

"C"	"S"
Distribution	

MK-FERGUSON

HYDRO / PNEUMATIC TEST RECORD

Report No. 42-060989-02
Test Date 6-9-89
Procedure No. NDE-07 R/SA
PAGE 1 OF 2

OJECT / AMO 1780 DA 5550 AREA /BLDG. No. OSUG.

DWG. / REV. PCP 9C R1

P/P# 71I
F/S -34.11e
MF 6/13/89

Type Test: ☐ Hydro ☒ Pneumatic ☐ Halide ☐ Vacuum ☐ Helium

Test Medium: ☐ Water ☐ Oil ☒ Air (Rm II 6-9-89) ☑ ~~Freon &~~ Nitrogen ☐ Helium

PART 1 OF 3
QA PKG 67 ~~0~~ 0.

Test Boundaries: SEE ISO LISTED ABOVE

ACCEPTANCE CRITERIA:

Required Test Pressure 20 ± 5 psi

Required Time ☒ 10 minutes

Other:

Per P-Code P224A

Other:

Pre-Hydro Walkdown complete Chuck Robert Date: 6/8/89

Quality Pre-Hydro Walkdown complete Ray Meyer Date: 6-9-89

Actual Test Pressure 20 PSI Actual Length of Test 19 min.

M. & T. E.: CDS No. 448-A Re-Cal Due Date 8-89

Test Results: ☑ Acceptable ☐ Unacceptable

REMARKS: REF: DCF 3521 FOR WORK DONE
NO VISIBLE LEAKAGE Rm II 6-9-89

PCP-9 PSA DCF
DVA- 6-13-89

INFORMATION ONLY

Ray Meyer II 6-9-89 R Brown III 6-12-89

QC Acceptance Date Reviewed By Date

F-127 Rev 6 (6-8

ASR 15-64 (6-88) Rev 5 ID 25033

RECEIVED JUN 15 1989

Distribution

MK-FERGUSON

HYDRO / PNEUMATIC TEST RECORD

Report No. 42-060889-10
Test Date 6-8-89
Procedure No. MKCP 600 R/1C
PAGE 1 OF 2

PROJECT / AMO 1780 DA 5550 AREA /BLDG. No. OSUG

DWG. / REV. PCP 9AB R1

P/P# 71H QA DLA
F/S -34.11e 67-N
PART 3 OF 3 BD 6/12/89
JACKET

Type Test: ☒ Hydro ☐ Pneumatic ☐ Halide ☐ Vacuum ☐ Helium

Test Medium: ☒ Water ☐ Oil ☐ Air ☐ Freon & Nitrogen ☐ Helium

Test Boundaries: SEE ISO LISTED ABOVE

ACCEPTANCE CRITERIA:

Required Test Pressure 375 PSI

Required Time ☒ 10 minutes Other:

Per P-Code ~~P2~~ P51B Other:
CER 6/6/89

Pre-Hydro Walkdown complete Church Robert Date: 6/6/89

Quality Pre-Hydro Walkdown complete Ray Mayer Date: 6-8-89

Actual Test Pressure 390 PSI Actual Length of Test 10 min.

M. & T. E.: 571-A Re-Cal Due Date 9-8-89
CDS No.

Test Results: ☑ Acceptable ☐ Unacceptable

REMARKS: REF: DCF 3521 FOR REWORK

NO VISIBLE LEAKAGE Rm II 6-8-89

PCP 9 PER DCF 3521
DWF 6-12-89

INFORMATION ONLY

Ray Mayer II 6-8-89 B Bow III 6-9-89
QC Acceptance Date Reviewed By Date

F-127 Rev 6

ASR 15-64 (6-88) Rev 5 ID 26033

RECEIVED

"O"	"S"
Distribution	

MK-FERGUSON

HYDRO / PNEUMATIC TEST RECORD

Report No. [illegible]
Test Date 6-8-89
Procedure No. MKCP 600 R/1c
PAGE 1 OF 2

PROJECT / AMO 1780 DA 5550 AREA /BLDG. No. O.S.U.G

DWG. / REV. PCP 9AB R1 PIP # 71H QA Pkg. 71H BD 6/13/8 F/S -34.11e PART 2 OF 3 CORE

Type Test: ☒ Hydro ☐ Pneumatic ☐ Halide ☐ Vacuum ☐ Helium

Test Medulm: ☒ Water ☐ Oil ☐ Air ☐ Freon & Nitrogen ☐ Helium

Test Boundaries: SEE ISO LISTED ABOVE

Required Test Pressure 375 PSI

ACCEPTANCE CRITERIA:

Required Time ☒ 10 minutes Other:

Per P-Code P224A Other:

Pre-Hydro Walkdown complete Chuck Robert Date: 6/6/89

Quality Pre-Hydro Walkdown complete [illegible] Date: 6-8-89

Actual Test Pressure 400 psi Actual Length of Test 12 min.

M. & T. E.: 571-A Re-Cal Due Date 9-8-89
CDS No.

Test Results: ☑ Acceptable ☐ Unacceptable

REMARKS: REF: DCF 3521 FOR REWORK
NO VISIBLE LEAKAGE [illegible] 6-8-89

PCP-9 Pkg. DCF 3521
DWF 6-12-89

INFORMATION ONLY

[illegible] 6-8-89 [illegible] 6-9
QC Acceptance Date Reviewed By Date

F-127 Rev

ASR 15-64 (6-88) Rev 5 ID 25033

RECEIVED JUN 1 5 1989

INFORMATION ONLY

Distribution

QA PKG 67-S

MK-FERGUSON
A MORRISON KNUDSEN COMPANY

HYDRO / PNEUMATIC TEST RECORD

Report No. 81-080189-02
Test Date 8-01-89
Procedure No. PIP 015 R/OB

PROJECT / AMO 1780 DA S 550 AREA /BLDG. No. OSUG

DWG. / REV. PCP9AA REV.1 / PCP9AB REV.1

P.P. 71G
PRT 10 F2

Type Test: ☐ Hydro ☒ Pneumatic ☐ Halide ☐ Vacuum ☐ Helium

Test Meduim: ☐ Water ☐ Oil ☒ Air ☐ Freon & Nitrogen ☐ Helium

F/S 34.11e

Test Boundaries: SEE SKETCHES LISTED ABOVE
SEE REMARKS BELOW

ACCEPTANCE CRITERIA: TG II 8-1-89 Required Test Pressure 20 PSI

Required Time ~~☒ 10 minutes~~ 30 minutes Other: N/A

Per P-Code P224A Other: N/A

Pre-Hydro Walkdown complete W.R. [signature] Date: 7-28-89

Quality Pre-Hydro Walkdown complete J. Gianard II Date: 8-1-89

Actual Test Pressure 21 PSI Actual Length of Test 35 min.

M. & T. E.: CDS No. 448-A Re-Cal Due Date 8/89

Test Results: ☒ Acceptable ☐ Unacceptable

REMARKS: THIS IS A BUBBLE LEAK TEST OF CORE PIPING PER IDM PD 875. PIPE INSTALLED PER DCF 3521 THESE TWO SKETCHES WELDED TOGETHER CORE PIPE only.

Test Inspected Between Points ① & ② with NO leakage. J. Gianard II 8-1-89

PCP 9 AA
VW 8-3-89 N/A

INFORMATION ONLY

J. Gianard II 8-1-89 B. Brown II 8-1-89
QC Acceptance Date Reviewed By Date

ASR 15-64 (5-88) Rev 5 ID 26033

F-127, Rev 6 (6-88)

RECEIVED AUG 03 1989

"Q" "S" Distribution

QA PKG # 67-T

MK-FERGUSON
A MORRISON KNUDSEN COMPANY

HYDRO / PNEUMATIC TEST RECORD

Report No. 81-080189-03
Test Date 8-1-89
Procedure No. MKCP 600 R/1C

PROJECT / AMO 1780 DA 5550 AREA /BLDG. No. OSUG

DWG. / REV. PCP9AA REV. 1 / PCP9AB REV. 1

Type Test: ☒ Hydro ☐ Pneumatic ☐ Halide ☐ Vacuum ☐ Helium

P.P. 71G
PRT 20 F2
F/S 34.11e

Test Medium: ☒ Water ☐ Oil ☐ Air ☐ Freon & Nitrogen ☐ Helium

Test Boundaries: SEE SKETCHES LISTED ABOVE
SEE REMARKS BELOW

ACCEPTANCE CRITERIA:

Required Time ☐ 10 minutes 15 MINUTES PER P224

Required Test Pressure 375 PSI

Other: N/A

Per P-Code P224A

Other: N/A

Pre-Hydro Walkdown complete W.R. [signature] Date: 7-28-89

Quality Pre-Hydro Walkdown complete J. [signature] II Date: 8-1-89

Actual Test Pressure 400 PSI

Actual Length of Test 15 min.

M. & T. E.: CDS No. 571-A

Re-Cal Due Date 9/89

Test Results: ☒ Acceptable ☐ Unacceptable

REMARKS: THIS IS HYDRO TEST OF CORE PIPING OF SKETCHES LISTED ABOVE. PIPE INSTALLED PER DCF 3521. THESE TWO SKETCHES WELDED TOGETHER, CORE PIPE ONLY.

Test Inspected Between Points (1) & (2) with no Leakage.

J. [signature] II 8-1-89

N/A

PCP 9AA
[initials] 8-3-89

INFORMATION ONLY

J. [signature] II — QC Acceptance — 8-1-89 Date

B B [signature] II — Reviewed By — 8-2-89 Date

ASR 15-64 (6-88) Rev 5 ID 26033

F-027 Rev 6 (6-88)

RECEIVED AUG 0 3 1989

"O" "S" Distribution

Page 1 of 3

MK-FERGUSON
A WESTINGHOUSE SAVANNAH RIVER COMPANY

HYDRO / PNEUMATIC TEST RECORD

Report No. 81-072889-03
Test Date 7-28-89
Procedure No. MKCP 600 R/1C

PROJECT / AMO 1780 DA 5550 AREA /BLDG. No. OSUG

DWG. / REV. PCP 9AC REV. 1 / PCP 9AD REV 2

P.P. 71J PR 120 F2

Type Test: ☒ Hydro ☐ Pneumatic ☐ Halide ☐ Vacuum ☐ Helium

Test Meduim: ☒ Water ☐ Oil ☐ Air ☐ Freon & Nitrogen ☐ Helium

Test Boundaries: SEE SKETCHES LISTED ABOVE

ACCEPTANCE CRITERIA: ☒ II 7-28-89 Required Test Pressure 375 PSI

Required Time ☒ ~~10 minutes~~ 15 minutes Other: N/A

Per P-Code P224A Other: N/A

Pre-Hydro Walkdown complete W.R. Lad Date: 7-28-89

Quality Pre-Hydro Walkdown complete H. Diamond II Date: 7-28-89

Actual Test Pressure 395 PSI Actual Length of Test 15 min.

M. & T. E.: CDS No. 560-A Re-Cal Due Date 10/89

Test Results: ☒ Acceptable ☐ Unacceptable

REMARKS: PIPING REWORKED PER DCF 3521. HYDRO TEST OF CORE PIPING ON SKETCHES LISTED ABOVE

PCP 9AC & PCP 9AD were Temp. Connected For Test. This Test Covers Inspection of Core For SW's 7 & 8 on PCP 9AC & SW8 on PCP 9AD only. H. Diamond II 7-28-89

PCP 9AD & AC N/A
DMF 8-1-89

INFORMATION ONLY

H. Diamond II — QC Acceptance — Date 7-28-89

B. Brown III — Reviewed By — Date 7-31-89

ASR 15-64 (6-88) Rev 5 ID 26033

F-127 Rev 6 (6-88)

RECEIVED AUG 01 1989

"Q" "S" Distribution	Page 1 of 3	MK-FERGUSON A MORRISON KNUDSEN COMPANY	Report No. 81-072889-02
		HYDRO / PNEUMATIC TEST RECORD	Test Date 7-28-89
			Procedure No. PIP 015 R/OR

PROJECT / AMO 1780 DA S 550 AREA /BLDG. No. OSUG

DWG. / REV. PCP9AC REV.1 / PCP9AD REV 2

P.P. 71J PART 1 OF 2

F/S 34 11e

Type Test: ☐ Hydro ☒ Pneumatic ☐ Halide ☐ Vacuum ☐ Helium

Test Meduim: ☐ Water ☐ Oil ☒ Air ☐ Freon & Nitrogen ☐ Helium

Test Boundaries: SEE SKETCHES LISTED ABOVE

QA PKG# 67 Q

ACCEPTANCE CRITERIA: ☑ II 7-28-89

Required Test Pressure 20 PSI

Required Time ☒ ~~10 minutes~~ 30 minutes

Other: N/A

Per P-Code P224A

Other: N/A

Pre-Hydro Walkdown complete W.R. [signature] Date: 7-28-89

Quality Pre-Hydro Walkdown complete J. [signature] II Date: 7-28-89

Actual Test Pressure 21 PSI

Actual Length of Test 35 min.

M. & T. E.: CDS No. 448-A

Re-Cal Due Date 8/89

Test Results: ☒ Acceptable ☐ Unacceptable

REMARKS: PIPING REWORKED PER DCP 3521 PNEU. TEST OF CORE PIPING ON SKETCHES LISTED ABOVE

PCP 9 AC & PCP 9AD were Temp. Connected For Test. This Test covers Inspection of core For SW's 8,7 on PCP 9AC & SW 8 on PCP 9AD only. J. [signature] II 7-28-89

PCP 9 AD & AC

DUE 8-1-89 N/A

INFORMATION ONLY

J. [signature] II 7-28-89 B. [signature] III 7-31-89

QC Acceptance Date Reviewed By Date

ASR 15-64 (6-88) Rev 5 ID 26033

RECEIVED AUG 0 1 1989

F-127 Rev 6 (6-88)

QA PKG 67A1

Page 1 of 4

3

"C"	"S"
Distribution	

MK-FERGUSON
A MORRISON KNUDSEN COMPANY

HYDRO / PNEUMATIC TEST RECORD

Report No. 21-101989-10
Test Date 10-19-89
Procedure No. MKCP 600 Rev

PROJECT / AMO 1780 DA S550 AREA /BLDG. No. S-OSUG

DWG. / REV. PCP 9AC REV 2 / PCP 9AB REV 2 / PCP9AAA REV 0

Type Test: ☒ Hydro ☐ Pneumatic ☐ Halide ☐ Vacuum ☐ Helium P.P. 71N PART 2 of 2

Test Medium: ☒ Water ☐ Oil ☐ Air ☐ Freon & Nitrogen ☐ Helium F/S 34.11e

Test Boundaries: SEE SKETCHES LISTED ABOVE AND REMARKS BELOW

ACCEPTANCE CRITERIA:

Required Time ☐ 10 minutes 15 MINUTES PER P224 Required Test Pressure 375 PSI

Per P-Code P224A Other: NA

Other: NA

Pre-Hydro Walkdown complete W.R. [illegible] Date: 10-18-89

Quality Pre-Hydro Walkdown complete [illegible] Date: 10-19-89

Actual Test Pressure 375 Actual Length of Test 16 min.

M. & T. E.: CDS No. 475 A cal 7-5-89 Re-Cal Due Date 1/9

Test Results: ☒ Acceptable ☐ Unacceptable

REMARKS: HYDRO. TEST OF THE FOLLOWING - FW 5 ON PCP9AC REV. 2 AND FW 3 ON PCP9AB, OTHER CORE PIPING SW'S PER THE FOLLOWING: PCP9AAA REV. 0 DONE @ CENTRAL SHOPS - PCP 9AC REV. 2 DONE ON PIPE PKG. 71J ~~[illegible]~~ VHI (QA PKG. 67R) - PCP 9AB REV. 2 DONE ON PIPE PKG. 71H 10-19-89 (QA PKG. ?)

WORK BEING DONE PER DCF 4498

INFORMATION ONLY

TEST BETWEEN POINTS 1 AND 2 WITH NO LEAKAGE JMD II 10-19-89

PCP 9AC
PCP 9AB
PCP 9AAA

10/23/89

[illegible] II 10-19-89 [illegible] II 10-23-89

QC Acceptance Date Reviewed By Date

ASR 15-64 (6-88) Rev 5 ID 26033 F-127 Rev 6 (6-88)

RECEIVED OCT 25 1989

Page 1 of 4

QA PKG 672

"Q"	"S"
Distribution	

MK-FERGUSON
A MORRISON KNUDSEN COMPANY

HYDRO / PNEUMATIC TEST RECORD

Report No. 21-10-1989-00
Test Date 10-19-89
Procedure No. PIP 015 R/18

PROJECT / AMO 1780 DA S550 AREA /BLDG. No. S-05UG

DWG. / REV. PCP9AC REV. 2 / PCP9AB REV. 2 / PCP9AAA REV. 0

Type Test: ☐ Hydro ☒ Pneumatic ☐ Halide ☐ Vacuum ☐ Helium P.P. 71N PART 1 of 2

Test Meduim: ☐ Water ☐ Oil ☐ Air ☒ Freon & Nitrogen ☐ Helium F/S 34.11c

Test Boundaries: SEE SKETCHES LISTED ABOVE AND REMARKS ↓

ACCEPTANCE CRITERIA:

Required Time ☐ 10 minutes 30 MINUTES Required Test Pressure 20 PSI Other: NA

Per P-Code P224 A Other: NA

Pre-Hydro Walkdown complete [signature] Date: 10-18-89

Quality Pre-Hydro Walkdown complete Mike Davis Date: 10-19-89

Actual Test Pressure 21 PSI Actual Length of Test 32 min.

M. & T. E.: CDS No. 427-A cal 7-5-89 Re-Cal Due Date 1/90

Test Results: ☒ Acceptable ☐ Unacceptable

REMARKS: BUBBLE LEAK TEST (PER IDM PD 875) OF THE FOLLOWING - FW 5 ON PCP9AC REV. 2 AND FW 3 ON PCP 9AB REV. 2. OTHER CORE SW's TESTED PER FOLLOWING - PCP9AAA REV. 0 DONE @ CENTRAL SHOPS. - PCP9AC REV. 2 DONE ON PIPE PKG. 71J (Q.A. PKG 67Q) PCP9AB REV 2 DONE ON PIPE PKG. 71H (Q.A. PKG. ?).

INFORMATION ONLY

WORK BEING DONE PER DCF 4498.

Test between points 1 and 2 with No visible leakage with The Bubble Leak method JMD II 10-19-89

PCP 9 AC
9 AB
9 AA DMF 10-23-89

Mike Davis II	10-19-89	[signature]	10-20-89
QC Acceptance	Date	Reviewed By	Date

ASR 15-64 (6-88) Rev 5 ID 26033 F-127 Rev 6 (6-88)

RECEIVED OCT 25 1989

"Q"	"S"
Distribution	

QA PKG 67 Ø

MK-FERGUSON
A MORRISON KNUDSEN COMPANY

HYDRO / PNEUMATIC TEST RECORD

Report No. 21-101889-05
Test Date 10-18-89
Procedure No. PIP 015 R/0B

PROJECT / AMO 1780 DA 5550 AREA /BLDG. No. S-OSUG

DWG. / REV. PCP 47B REV. 4 / PCP 47C REV. 0

P.P. 71L PART 1 of 2
F/S 34.11e

Type Test: ☐ Hydro ☒ Pneumatic ☐ Halide ☐ Vacuum ☐ Helium

Test Meduim: ☐ Water ☐ Oil ☐ Air ☑ ~~Freon~~ & Nitrogen ☐ Helium

Test Boundaries: SEE SKETCHES LISTED ABOVE AND REMARKS BELOW

ACCEPTANCE CRITERIA:

Required Test Pressure 20 PSI

Required Time ☐ 10 minutes 30 MINUTES Other: NA

Per P-Code P224 A Other: NA

Pre-Hydro Walkdown complete W.R. Lash Date: 10-17-89

Quality Pre-Hydro Walkdown complete Mike Davis Date: 10-18-89

Actual Test Pressure 21 PSI Actual Length of Test 35 min.

M. & T. E.: CDS No. 427-A (cal 7-5-89) Re-Cal Due Date 1/90

INFORMATION ONLY

Test Results: ☑ Acceptable ☐ Unacceptable

REMARKS: THIS TEST IS A BUBBLE LEAK TEST OF FW1 ON PCP47C. (REF IDM PD 875) WORK DONE PER DCF 4498 & DCF 3521. ALL OTHER CORE WELDS ON PCP47B TESTED PER P.P. 71I (QA PKG. 67 Ø) NOTE: PCP47B WAS ORIGINALLY PCP9 C.

(NO VISIBLE LEAKAGE FOUND WITH THE BUBBLE LEAK METHOD DMD 10-18-89)

PCP. 47 C
PCP 47B
DWF 10-23-89

QC Acceptance	Date	Reviewed By	Date
Mike Davis	10-18-89	B Brown	10-22-89

ASR 15-64 (6-88) Rev 5 ID 26033

F-127 Rev 6 (6-86)

RECEIVED OCT 25 1989

Page 1 of 3.

QA PKG # 67X

"Q"	"G"
Distribution	

MK-FERGUSON
A MORRISON KNUDSEN COMPANY

HYDRO / PNEUMATIC TEST RECORD

Report No. 21-102089-02
Test Date 10-20-89
Procedure No. PIP015 R06

PROJECT / AMO 1780 DA S550 AREA /BLDG. No. S-OSUG

DWG. / REV. PCP9AG REV.D / PCP9AD REV.3

P.P. 71M PART 1 of 2

Type Test: ☐ Hydro ☒ Pneumatic ☐ Halide ☐ Vacuum ☐ Helium

FIS 34.11c

Test Meduim: ☐ Water ☐ Oil ☐ Air ☒ ~~Freon~~ Nitrogen ☐ Helium

Test Boundaries: SEE SKETCHES LISTED ABOVE AND REMARKS BELOW

ACCEPTANCE CRITERIA:

Required Time ☐ 10 minutes 30 MINUTES

Required Test Pressure 20 PSI

Other: NA

Other: NA

Per P-Code P224A

Pre-Hydro Walkdown complete W.R. Lamb Date: 10-18-89

Quality Pre-Hydro Walkdown complete Mike Davis Date: 10-20-89

Actual Test Pressure 21 PSI

Actual Length of Test 12 min.

M. & T. E.: CDS No. 427-A CAL 7-5-89

Re-Cal Due Date 1/90

Test Results: ☒ Acceptable ☐ Unacceptable

REMARKS: BUBBLE LEAK TEST (PER IDM PD 875) OF FW 1 OF PCPAG REV.0. OTHER ~~FW~~ SW ON CORE DONE @ CENTRAL SHOPS (FW2ON 9AG). FW ON PCP 9AD REV.3 TESTED PER PIPE PKG 71J (Q.A. PKG 67Q)

WORK DONE PER DCF 4498

INFORMATION ONLY

Test between points One Two with No Leakage Detected with Bubble Leak

JMD II 10-20-89

PCP AD & AG
DWF 10/25/89

Mike Davis II 10-20-89
QC Acceptance Date

B Bass III 10-23-89
Reviewed By Date

F-127 Rev 6 (6-88)

ASR 15-64 (6-88) Rev 5 ID 26033

RECEIVED OCT 25 1989

PAGE 1 OF 3

"Q" "S" Distribution

QA PKG 67 X

MK-FERGUSON
A MORRISON KNUDSEN COMPANY

HYDRO / PNEUMATIC TEST RECORD

Report No.	21-101989-06
Test Date	10-19-87
Procedure No.	MKCP 600 R/C

PROJECT / AMO 1780 DA S550 AREA /BLDG. No. S-OSILG

DWG. / REV. PCP 47B REV. 4 / PCP 47C REV. 0

Type Test: ☒ Hydro ☐ Pneumatic ☐ Halide ☐ Vacuum ☐ Helium

P.P. 71L PART 2 OF 2
F/S 34.11e

Test Meduim: ☒ Water ☐ Oil ☐ Air ☐ Freon & Nitrogen ☐ Helium

Test Boundaries: SEE SKETCHES LISTED ABOVE AND REMARKS BELOW

ACCEPTANCE CRITERIA:

Required Time ☐ 10 minutes 15 MINUTES PER P224

Required Test Pressure 375 PSI

Other: NA

Per P-Code P224A

Other: NA

Pre-Hydro Walkdown complete W.L. Lad Date: 10-17-89

Quality Pre-Hydro Walkdown complete Mike Davis Date: 10-19-89

Actual Test Pressure 375 PSI

Actual Length of Test 17 min.

M. & T. E.: CDS No. 475-A CAL 7-5-89

Re-Cal Due Date 1/90

Test Results: ☒ Acceptable ☐ Unacceptable

REMARKS: THIS IS A HYDRO TEST OF FW1 ON PCP 47C. WORK DONE PER DCF 4498 & DCF 3521. ALL OTHER CORE WELDS ON PCP 47B TESTED PER P.P. 71I (QA PKG 67 [illegible]) NOTE: PCP 47B WAS ORIGINALLY PCP 9C.

INFORMATION ONLY

TEST between points 1 and 2 with no visible LEAKS JMD II 10-19-89

PCP 47B
PCP 47C
[illegible] 10-23-89

RECEIVED OCT 25 1989

Mike Davis II	10-19-89	[illegible]	10-20-89
QC Acceptance	Date	Reviewed By	Date

RECEIVED OCT 25 1989

ASR 15-64 (6-88) Rev 5 ID 26033 F127 Rev 6 (6-88)

QA PKG 67V

Page 1 of 3

"Q"	"S"
Distribution	

MK-FERGUSON
A MORRISON KNUDSEN COMPANY

HYDRO / PNEUMATIC TEST RECORD

Report No.	21-102089-04
Test Date	10-20-89
Procedure No.	MKCP 600 4/11

PROJECT / AMO 1780 DA S550 AREA /BLDG. No. S-OSUG

DWG. / REV. PCP 9 AG REV 0 / PCP 9 AD REV. 3

P.P. 71M PART 2 OF 2
F/S 34.11c

Type Test: ☒ Hydro ☐ Pneumatic ☐ Halide ☐ Vacuum ☐ Helium

Test Meduim: ☒ Water ☐ Oil ☐ Air ☐ Freon & Nitrogen ☐ Helium

Test Boundaries: SEE SKETCHES LISTED ABOVE AND REMARKS BELOW.

ACCEPTANCE CRITERIA:

Required Time ☐ 10 minutes 15 MINUTES PER P224

Required Test Pressure 375 PSI

Other: NA

Per P-Code P224 A

Other: NA

Pre-Hydro Walkdown complete W.R. Lark Date: 10-18-89

Quality Pre-Hydro Walkdown complete Mike Davis Date: 10-20-89

Actual Test Pressure 375 PSI Actual Length of Test 17 min.

M. & T. E.: CDS No. 480-A cal 10-19-89 Re-Cal Due Date 11-19-89

Test Results: ☒ Acceptable ☐ Unacceptable

REMARKS: HYDRO TEST OF FW1 (PCP 9 AG REV. 0) OTHER ~~FW~~ ON CORE DONE @ CENTRAL SHOPS (FW 2 ON 9AG). FW ON PCP 9AD REV. 3 TESTED PER PIPE PKG. 71J (QA. PKG 67B).

WL 10-18-89

INFORMATION ONLY

WORK DONE PER DCF 4498

TEST BETWEEN POINTS 1 & 2 WITH NO VISIBLE LEAKS JMD II 10-20-89

PCP AD & AG
DWF 10/25/89

Mike Davis II 10-20-89 R. Brown III 10-23-89

QC Acceptance Date Reviewed By Date

ASR 15-64 (6-88) Rev 5 ID 26033

F-127 Rev 6 (6-88)

RECEIVED OCT 25 1989

Test Report No. 83-6

F.S. 34.11 D

ASR 2-98 (11/80)

INFORMATION ONLY

"Q" ☐ "S" ☑
Distribution:
Project Records Center - Constr
Division Engineer
T & I
Pipe

FILE ID #12800

Savannah River Plant
PRESSURE TEST REPORT

W761595
W761596
W761597
W761598
W761588

Project 1780 AMO 8-1047 N/A Area S Bldg. No. S-511 Dwg. W761588

Test Location: Shop N/A Field ✓ Service SDP

Fabrication: Pipe ✓ Tank N/A Equipment N/A Size 3" Material S/S

Type Test: Hydro ✓ Pneumatic N/A Halide N/A Vacuum N/A

Test Medium: Water ✓ Oil N/A Air N/A Freon & Nitrogen N/A Vacuum N/A

Location: From (3) W761588 To (6) W761588

Line No. SDP 10 & 11

Actual Test Pressure: 375 Vacuum N/A Actual Length of Test 45 min.

Special Instructions: Ref. Safety Procedure No. 52 - T&I S.I. T&I 5

(Protection: Safety, Blank Offs, Etc.)

Acceptance Criteria: Test Pressure 375 Time (Minimum 15 min. or as req.) Vacuum N/A

Per Spec. 4482 P-Code P-324 Dwg. N/A Teletype No. N/A Local Design N/A

Remarks TEST OK

Gauge CDS No. 360A Expires 5-88

Test Requested by KEN BLANKENSHIP per
Div. Eng. Area Eng.

	Name	Title
Test Accepted by: Testing & Inspection	John R. [illegible]	MK QC
Craft Foreman	J V Dunlap	
Operations*		

Date 12-16-87

* Optional

Test Report No. 83-H

ASR 2-98 (11/80)

FS 34.11D

IR. 41-01-04-88-01

"Q" ☐ "S" ☑
Distribution:
Project Records Center - C
Division Engineer
T & I
Pipe

FILE ID #12800

Savannah River Plant
PRESSURE TEST REPORT

W 761 58
W 761 59
W 761 59
W 761 59
W 761 59
W 761 58

Project 1780 AMO 8-1047 N/A Area S Bldg. No. N/A Dwg. W 761 58

Test Location: Shop N/A Field ✓ Service SDP JACKET

Fabrication: Pipe ✓ Tank N/A Equipment N/A Size 10" Material C/S

Type Test: Hydro ✓ Pneumatic N/A Halide N/A Vacuum N/A

Test Medium: Water ✓ Oil N/A Air N/A Freon & Nitrogen N/A Vacuum N/A

Location: From (6) W 761588 To (3) W 761588

Line No. SDP 10 & 11 JACKET

Actual Test Pressure: 132 PSI Vacuum N/A Actual Length of Test 60 min.

Special Instructions: Ref. Safety Procedure No. 52 - T&I S.I. T&I 5

(Protection: Safety, Blank Offs, Etc.)

Acceptance Criteria: Test Pressure 125 PSI Time (Minimum 15 min. or as req.) Vacuum N/A

Per Spec. 4482 P-Code P-51 Dwg. N/A Teletype No. N/A Local Design N/A

Remarks TEST OK

Gauge CDS No. 929 Expires 2-88

Test Requested by KEN BLANKENSHIP per
Div. Eng. Area Eng.

		Name	Title
Test Accepted by:	Testing & Inspection	John R. Lindsay	MK. QC.
	Craft Foreman	J L Dunlap	
	Operations*		

Date 1-4-88

* Optional

Test Report No. 100-D

PAGE 1 of 2

SR 2-98 (11/80)

Facility Segment

34.11e

34.11 D

Savannah River Plant
PRESSURE TEST REPORT

"Q" ☐	"S" ☒
Distribution:	
Project Records Center - Constr.	
Division Engineer	
T & I	
Pipe	

FILE ID #12800

P&I W750135
W750136
W750251

D195569
Field SKT.

Project 1780 AMO 8-1047 N/A Area 511-S Bldg. No. 511-S Dwg. #1

Test Location: Shop N/A Field ✓ Service Leak Detection System

Fabrication: Pipe ✓ Tank N/A Equipment N/A Size 8", 2", 1" Material C/S

Type Test: Hydro ✓ Pneumatic N/A Halide N/A Vacuum N/A

Test Medium: Water ✓ Oil N/A Air N/A Freon & Nitrogen N/A Vacuum N/A

Location: From (3) D195569 P&I W750251 To (4) Field SKT. #1 P&I W750135 W750136

Line No. See Note #1 + #2

Actual Test Pressure: 135# p.s.i. Vacuum N/A Actual Length of Test 60 min.

Special Instructions: Ref. Safety Procedure No. 52 - T&I S.I. T&I 5

(Protection: Safety, Blank Offs, Etc.)

Acceptance Criteria: Test Pressure 125# p.s.i. Time (Minimum 15 min. or as req.) Vacuum N/A

Per Spec. N/A P-Code N/A Dwg. N/A Teletype No. 001976 Local Design N/A

Remarks Test Accepted: Plug Rods were out to allow entire system to be pressurized

Gauge CDS No. 53B Expires 8/86

Test Requested by F. G. Gatlin (Div. Eng.) per J. K. Blankenship (Area Eng.)

	Name	Title
Test Accepted by: Testing & Inspection	[signature]	T&I
Craft Foreman	[signature]	Pipe
Operations*		

Date 4/21/86

* Optional

Note #1 Line No. included in Test

LDX 318 LDX 71 LDX 46
DX 94 LDX 69 Pan 972
DX 32 LDX 49
DX 31 LDX 68
DX 87 LDX 44
DX 50 LDX 70

Note #2

Leak Detection Boxes included in Test:

S550-200-080-00-T
S550-200-010-00-T
S550-200-020-00-T
S550-200-090-00-T

[redacted]

"Q"	"S"
Distribution:	
Project Records Center-Const.	

ASR 4-128
Rev. 8/84
File ID #9830

INCREMENT LEAK TESTS
(FIELD PIPING)

PROJECT: 1780 AREA: S-511

DRAWING NOS: D196134, D196135,

PI N750150, _____

SYSTEM: JACKET VENT

TEST DATA

Type of Test			Pipe	Core	Line No.	From	To	CDS No.	Pressure	Time	QC Inspector	Date Acc
Hydro	Halide	Other										
✓	N/A		✓	N/A	LDX 1	1	2	596 10/86	126 PSIG	30	BMB	8/26/86
✓		N/A	✓		LDX 2	1	2	596 10/86	126 PSIG	30	BMB	8/26/86

COMMENTS: N/A

Tests Report Nov 78 [illegible]

R 4-128
8/84
File ID #9830

F.S. 34.11 D

Distribution: "S"

Project Records Center-Constr.

Page 1 of

INCREMENT LEAK TESTS
(FIELD PIPING)

PROJECT: 1780 AREA: S-550

DRAWING NOS: W761588, _____,

D195554, D195548

SYSTEM: RCZ & PCP

TEST DATA

Type of Test: Hydro	Type of Test: Halide	Type of Test: Other	JKT Pipe	Core	Line No.	From	To	CDS No.	Pressure	Time	QC Inspector	Date Acc
N/A	✓	N/A	N/A	✓	PCP 4	1	2	928 11/86 934 11/86	15 psig	30 Min	E.W. Thompson	7-11-[illegible]
N/A	✓	N/A	N/A	✓	RCZ 20	↓	↓	928 11/86 934 11/86	15 psig	30 Min	E.W. Thompson	7-1[illegible]
✓	N/A	N/A	N/A	✓	PCP 4	1	2	53B 12-86	385 psig	30 Min	E.W. Thompson	7-11-[illegible]
✓	N/A	N/A	N/A	✓	RCZ 20	↓	↓	53B 12-86	385 psig	30 Min	E.W. Thompson	7-11-[illegible]
✓	N/A	N/A	JKT ✓	N/A	RCZ	1	2	29B 1-87	128 psig	30 Min	Brian M. Boston	7-1[illegible]
N/A	N/A	Bubble Leak	N/A	✓	PCP 4	3	4	928 7-87	15 psig	30 Min	Brian M. Boston	2-5-[illegible]
N/A	N/A	Bubble Leak	N/A	✓	RCZ 20	↓	↓	928 7-87	15 psig	30 Min	Brian M. Boston	2-5[illegible]
✓	N/A	N/A	N/A	✓	PCP 4	3	4	595 2-87	380 psig	30 Min	Brian M. Boston	2-5-[illegible]
✓	N/A	N/A	N/A	✓	RCZ 20	↓	↓	595 2-87	380 psig	30 Min	Brian M. Boston	2-5-[illegible]
✓	N/A	N/A	JKT ✓	N/A	RCZ	3	4	522 6-87	128 psig	30 Min	Brian M. Boston	2-12-[illegible]
N/A	N/A	Bubble Leak	N/A	✓	PCP 4	5	3	893 8-87	15 psig	30 Min	Brian M. Boston	2-17-[illegible]
N/A	N/A	Bubble Leak	N/A	✓	RCZ 20	↓	↓	893 8-87	15 psig	30 Min	Brian M. Boston	2-17-[illegible]
N/A	N/A	Bubble Leak	N/A	✓	PCP 4	6	4	989 4-87	15 psig	30 Min	[illegible]	3-17-[illegible]
N/A	N/A	Bubble Leak	N/A	✓	RCZ 20	↓	↓	989 4-87	15 psig	30 Min	[illegible]	3-17-[illegible]
✓	N/A	N/A	N/A	✓	PCP 4	6	4	595 8-87	375 psig	30 Min	[illegible]	3-1[illegible]
✓	N/A	N/A	N/A	✓	RCZ 20	↓	↓	595 8-87	375 psig	30 Min	[illegible]	3-1[illegible]
✓	N/A	N/A	JKT ✓	N/A	RCZ	6	4	595 8-87	125 psig	30 Min	[illegible]	3-2[illegible]
N/A	N/A	N/A	N/A	N/A	N/A	N/A	N/A	N/A	N/A	N/A	N/A	N/A

COMMENTS: Note: LDX 72 and LDX 132 were also tested from 3 to 4

ASR 2-98 (11/80)

Facility Segment 34.11e

Test Report No 100-G

FS. 34.11D

"Q" ☐ "S" ☒
Distribution:
Project Records Center - Constr.
Division Engineer
T & I
Pipe

Savannah River Plant
PRESSURE TEST REPORT

FILE ID #12800 P&I W750137 W750040 W750293 W750042

D195567

Project 1780 AMO 8-1047 N/A Area S Bldg. No. 511-S Dwg. Field SKT #1

Test Location: Shop N/A Field ✓ Service Leak Detection System

Fabrication: Pipe ✓ Tank N/A Equipment N/A Size 8", 2", 1" Material C/S

Type Test: Hydro ✓ Pneumatic N/A Halide N/A Vacuum N/A

Test Medium: Water ✓ Oil N/A Air N/A Freon & Nitrogen N/A Vacuum N/A

Location: From (1) D195567 C&I W750042 To (2) Field SKT #1 P&I W75013 W750040 W750293

Line No. See Note #1 & #2

Actual Test Pressure: 135 psi Vacuum N/A Actual Length of Test 60 m

Special Instructions: Ref. Safety Procedure No. 52 - T&I S.I. T&I 5

(Protection: Safety, Blank Offs, Etc.)

Acceptance Criteria: Test Pressure 125 psi Time (Minimum 15 min. or as req.) Vacuum N/A

Per Spec. N/A P-Code N/A Dwg. N/A Teletype No. 001976 Local Design N/A

Remarks Test Accepted; Plug Rods were out to allow entire system to be pressurized

Gauge CDS No. 53B Expires 8/86

Test Requested by F. G. Gatlin (Div. Eng.) per J. K. Blanchenship (Area Eng.)

	Name	Title
Test Accepted by: Testing & Inspection	[signature]	T&I
Craft Foreman	[signature]	Pipe
Operations*		

Date 4/17/86

* Optional

Note #1

Line no. included in Test

LDX 167	LDX 45	LDX 129	LDX 29
LDX 125	LDX 47	LDX 166	LDX 30
LDX 127	LDX 48	LDX 34	LDX 109
LDX 45	LDX 35	LDX 155	LDX 102
	LDX 126	LDX 162	LDX 320
			Pow 1237

Note #2

Leak Detection Boxes included in Test

S-550-200-110-00-T
S-550-200-101-00-T
S-550-200-30-00-T
S-550-200-40-00-T
S-550-200-150-00-T
[illegible]

"Q"	"NON-Q"
Distribution:	
Project Records Center - Constr	

MK-FERGUSON

FINAL WALKDOWN CHECKLIST

PROJECT S1780 QP 14.2 Rev.

FWVT S1780-128 QA ACCEPTANCE

ITEM No.	ACC	REJ	REMARKS
FACILITY SEGMENT- 34.11d			
VERIFY THAT ASSOCIATED ITEMS HAVE PROPER IDENTIFICATION TAGS/LABELS ATTACHED AND THE HANGER SPAN IS IN ACCORDANCE WITH DESIGN REQUIREMENTS IN ADDITION TO THE APPLICABLE REQUIREMENTS OF QP-14.2 LATEST REVISION.			
ATTACHED ARE THE LATEST DESIGN REVISION OF THE P & ID's TO BE USED IN CONJUNCTION WITH THE CHECKLIST. IF A REJECTABLE ITEM IS FOUND, CIRCLE THAT ITEM ON THE ATTACHED P & ID AND ASSIGN A SEQUENTIAL NUMBER TO THAT ITEM THEN LIST THE ITEM # ON CHECKLIST INDICATE REJECT AND GIVE THE DESCRIPTION OF THE DEFICIENCY WITH THE ASSIGNED # IN REMARKS.			
NOTE: IF AN ITEM IS INACCESSIBLE, INDICATE THIS ON DRAWING AND GIVE REASON FOR INACCESSIBILITY.			

INFORMATION ONLY

Page 1 of 8

T/O SEG. NO. 34.11d

QC FINAL ACCEPTANCE

41-102088-02

[signature] Rev. II

LOCI REVIEW

B Brown 10-21-88

ASR 15-181 (3-88) ID 26095

F-572 REV 2 (3-88)

TEST Report No. 78-6

F.S. 34.11D

ASR 2-98 (11/80)

"Q" ☐	"S" ☑
Distribution:	
Project Records Center - Con...	
Division Engineer	
T & I	
Pipe	

FILE ID #12800

Savannah River Plant
PRESSURE TEST REPORT

W7615
W76159
W76159[illegible]
W761597
W761598
W761588

Project 1780 AMO 8-1047 N/A Area S Bldg. No. S-511 Dwg. W761588

Test Location: Shop N/A Field ✓ Service PCP RCZ

Fabrication: Pipe ✓ Tank N/A Equipment N/A Size 3" Material S/S

Type Test: Hydro N/A Pneumatic ✓ BUBBLE LEAK Halide N/A Vacuum N/A

Test Medium: Water N/A Oil N/A Air ✓ Freon & Nitrogen N/A Vacuum N/A

Location: From (2) W761588 To (4) W761588

Line No. PCP4 & RCZ-20

Actual Test Pressure: 16 PSI Vacuum N/A Actual Length of Test 45 min

Special Instructions: Ref. Safety Procedure No. 52 - T&I S.I. T&I 5

(Protection: Safety, Blank Offs, Etc.)

Acceptance Criteria: Test Pressure 15 PSI Time (Minimum 15 min. or as req.) Vacuum N/A

Per Spec. 4482 P-Code P-224 Dwg. N/A Teletype No. N/A Local Design N/A

Remarks TEST OK

Gauge CDS No. 395-A Expires 5-88

Test Requested by KEN BLANKENSHIP per _____
Div. Eng. Area Eng.

	Name	Title
Test Accepted by: Testing & Inspection	John R. [illegible]	MK QC.
Craft Foreman	J V Dunbar	
Operations*		

Date 12-16-87

* Optional

ASR 2-98 (11/80)

FS. 34.08B, [redacted] 34.11C
IR. 41-022988-02
34.ND

"Q" ☐ "S" ☑
Distribution:
Project Records Center - Constr.
Division Engineer
T & I
Pipe

FILE ID #12800

Savannah River Plant
PRESSURE TEST REPORT

Project 1780 AMO 8-1047 N/a Area -5- Bldg. No. AUX PIT Dwg. W75029

Test Location: Shop N/a Field ✓ Service PEN NOZZELES

Fabrication: Pipe ✓ Tank N/a Equipment N/A Size 3" Material S/S

Type Test: Hydro N/A Pneumatic ✓ Halide N/a Vacuum N/a

Test Medium: Water N/a Oil N/a Air ✓ Freon & Nitrogen N/a Vacuum N/a

Location: From (1) W750290 To (2) W750290

Line No. NOZZELES 2, 3, 4, 5, 6, 7, ON PENS 919, 911, 913, 916, 918, 917

Actual Test Pressure: 21 psi Vacuum N/a Actual Length of Test 30 min.

Special Instructions: Ref. Safety Procedure No. 52 - T&I S.I. T&I 5

(Protection: Safety, Blank Offs, Etc.)

Acceptance Criteria: Test Pressure 20 psi +-5 Time (Minimum 15 min. or as req.) Vacuum N/a

Per Spec. 4482 P-Code P224A Dwg. N/a Teletype No. N/a Local Design N/a

Remarks TEST

Gauge CDS No. 150 A Expires 7-88

Test Requested by _____ per EJ BRAUN
Div. Eng. Area Eng.

	Name	Title
Test Accepted by: Testing & Inspection	John R. Lindsay	MK QC
Craft Foreman	R. J. Nafarola	FOREMAN
Operations*		

Date 2-29-88

* Optional

MK Copy

WOLFE PRINTING CO., AUGUSTA, GA 30901 [illegible]

TEST Report No. 78-F

ASR 2-98 (11/80)

FS. 34.11D

"Q" ☐	"S" ☑
Distribution:	
Project Records Center - Const.	
Division Engineer	
T & I	
Pipe	

FILE ID #12800

Savannah River Plant
PRESSURE TEST REPORT

W761587
W761595
W761596
W761597
W761598
W761588

Project 1720 AMO 8-1047 N/A Area S Bldg. No. S-511 Dwg. W761588

Test Location: Shop N/A Field ✓ Service PCP RCZ

Fabrication: Pipe ✓ Tank N/A Equipment N/A Size 3" Material S/S

Type Test: Hydro ✓ Pneumatic N/A Halide N/A Vacuum N/A

Test Medium: Water ✓ Oil N/A Air N/A Freon & Nitrogen N/A Vacuum N/A

Location: From (2) W761588 To (4) W761588

Line No. PCP4 & RCZ-20

Actual Test Pressure: 385 PSI Vacuum N/A Actual Length of Test 45 min

Special Instructions: Ref. Safety Procedure No. 52 - T&I S.I. T&I 5

(Protection: Safety, Blank Offs, Etc.)

Acceptance Criteria: Test Pressure 375 Time (Minimum 15 min. or as req.) Vacuum N/A

Per Spec. 4482 P-Code P-224 Dwg. N/A Teletype No. N/A Local Design N/A

Remarks TEST OK

Gauge CDS No. 394-A Expires 5-88

Test Requested by KEN BLANKENSHIP (Div. Eng.) per _____ (Area Eng.)

	Name	Title
Test Accepted by: Testing & Inspection	John R. Lindsay	MK QC
Craft Foreman	J. Dunlap	
Operations*		

Date 12-16-87

* Optional

Test Report No. 78-H

FS-34110

PIP

MK-FERGUSON

HYDRO/PNEUMATIC TEST RECORD

Distribution:

Project Records Center-Constr.

Test Boundaries (2) W761588-7 Rev (4) W761588-7 REV.

Project No. 1780 Test No. 1 Location S Date of Test 1-12-88

System Name PCP - RCZ JACKET

Spool/Mark # of Piping/Vessel N/A Dwg. # & Rev. N/A

Applicable Specification Number 4482-P51

Material to be Tested C/S Test Medium Used WATER

Max. Chloride Allowed 250 ppm Results of Most Recent Chloride Test 1.0 ppm Date Performed 5-86

Max./Min Test Press. Allowed 125 PSIG Act. Test Press. 128 PSIG

Temperature of: Thermometer Number N/A

Medium 50 ~ °F Material 50 ~ °F Atmospheric 52 ~ °F

Test Gage:

CDS # 397-A Cal. Date 11-16-87 Re-Cal Due Date 5-88

Req'd Exam. Press. 125 PSIG Actual Exam Press. 128 PSIG

Start Time 2:30 pm Complete Time 3:10 pm

Test Results (Acceptable/Unacceptable)

TEST OK

Remarks: LINE NO. PCP 4, RCZ 20 (FINAL TEST)

TEST WENT THROUGH DWGS. W761587, W761595, W761596, W761597, W761598

R.E. Ellison 1-12-88
QC Acceptance Date

W. A. Bell, Jr. 3-2-88
Reviewed By Date

ASR# 15-64 (9/87)

FILE ID 28033

TEST Report No. 83-F

FS. 34.11D

ASR 2-98 (11/80)

"Q" ☐ "S" ☑
Distribution:
Project Records Center - Co...
Division Engineer
T & I
Pipe

FILE ID #12800

Savannah River Plant
PRESSURE TEST REPORT

W7615..
W7615..
W76159
W76159..
W761598
W761588

Project 1770 AMO 8-1047 N/A Area S Bldg. No. S-511 Dwg. W761588

Test Location: Shop N/A Field ✓ Service SDP

Fabrication: Pipe ✓ Tank N/A Equipment N/A Size 3" Material S/S

Type Test: Hydro N/A Pneumatic ✓ Bubble leak Halide N/A Vacuum N/A

Test Medium: Water N/A Oil N/A Air ✓ Freon & Nitrogen N/A Vacuum N/A

Location: From (3) W761588 To (6) W761588

Line No. SDP 10 & 11

Actual Test Pressure: 16 Vacuum N/A Actual Length of Test 45 min.

Special Instructions: Ref. Safety Procedure No. 52 - T&I S.I. T&I 5

(Protection: Safety, Blank Offs, Etc.)

Acceptance Criteria: Test Pressure ~~375~~ 15 Time (Minimum 15 min. or as req.) Vacuum N/A

Per Spec. 4482 P-Code P224 Dwg. N/A Teletype No. N/A Local Design N/A

Remarks TESK OK

Gauge CDS No. 395 A Expires 5-88

Test Requested by KEN BLANKENSHIP per
Div. Eng. Area Eng.

		Name	Title
Test Accepted by:	Testing & Inspection	John R. Lindsay	MK QC
	Craft Foreman	J V Dunlap	
	Operations*		

Date 12-15-87

* Optional

MK-FERGUSON
A MORRISON KNUDSEN COMPANY

[redacted]

HYDRO/PNEUMATIC TEST RECORD

"Q" ☐ "S" ☑
Distribution:
Project Records Center-Constr.

IR No. #57-22488-05 PAGE 1 OF 2

Test Boundaries (1) D195540 (2) D195540

Project No. 1780 Test No. N/A Location Low Point Pump Pit Date of Test 2-24-88

System Name SPARE-TO/FROM AUXILIARY PUMP PIT

Spool/Mark # of Piping/Vessel D195540 Dwg. # & Rev. 2

Applicable Specification Number 4482/P-224A

Material to be Tested S/S 3" PIPE Test Medium Used AIR

Max. Chloride Allowed 250 PPM Results of Most Recent Chloride Test 1.0 PPM Date Performed 5-23-86

Max./Min Test Press. Allowed 20 PSIG Act. Test Press. 20 PSIG

Temperature of: Thermometer Number 44-A

Medium 51 °F Material 55 °F Atmospheric 55 °F

Test Gage:

CDS # 1395-A Cal. Date 11-16-87 Re-Cal Due Date 5/88

Req'd Exam. Press. 20 PSIG Actual Exam Press. 20 PSIG

Start Time 10:40 Complete Time 11:05

Test Results (Acceptable/Unacceptable)

ACCEPTED, PNEUMATIC TEST ONLY / WALK-DOWN-COMPLETE From (1) to (2)

Remarks: [redacted]

[signature] I57 2-24-88 [signature] 2/26/88
QC Acceptance Date Reviewed By Date

MK-FERGUSON
A MORRISON KNUDSEN COMPANY

FS. No.# ~~34.03A~~ 34.11D CM 2-29-88

HYDRO/PNEUMATIC TEST RECORD

"Q" ☐ "S" ☑
Distribution:
Project Records Center-Constr.

ID No. #57-22388-10 PAGE 1 of 2

Test Boundaries (1) D195539 (2) D195539

Project No. 1780 Test No. N/A Location "S" AREA LOW POINT Date of Test 2-23-88

System Name SLUDGE FROM AUXILIARY PUMP PIT

Spool/Mark # of Piping/Vessel D195539 Dwg. # & Rev. 2

Applicable Specification Number 4482 / P-224A

Material to be Tested S/S Test Medium Used AIR

Max. Chloride Allowed 250 PPM Results of Most Recent Chloride Test 1.0 PPM Date Performed 5-23-86

Max./Min Test Press. Allowed 20 PSIG Act. Test Press. 20 PSIG

Temperature of: Thermometer Number 44-A

Medium 52 °F Material 58 °F Atmospheric 58 °F

Test Gage:

CDS # 391-A Cal. Date 11-10-87 Re-Cal Due Date 5-10-88

Req'd Exam. Press. 20 PSIG Actual Exam Press. 20 PSIG

Start Time 8:00 Complete Time 8:25

Test Results (Acceptable/Unacceptable)

ACCEPTED, PNEUMATIC TEST ONLY / WALK DOWN COMPLETE From (1) to (2)

Remarks: PEN.# 96[illegible]

[signature] II 57 2-23-88 [signature] 2/24/88
QC Acceptance Date Reviewed By Date

TEST REPORT No. 83-I

MK-FERGUSON
A MORRISON KNUDSEN COMPANY

IR NO. 41-021688-02
FS. (34.11D), 34.03A

HYDRO/PNEUMATIC TEST RECORD

"Q" ☐ "S" ☑
Distribution:
Project Records Center-Constr.

Test Boundaries (1) W750136 (2) W750136

Project No. 1730 Test No. N/A Location -5- Date of Test 2-16-88

System Name PROCESS SDP

Spool/Mark # of Piping/Vessel N/A Dwg. # & Rev. W750136-Rev

Applicable Specification Number 4482-P224A

Material to be Tested S/S Test Medium Used WATER

Max. Chloride Allowed 250ppm Results of Most Recent Chloride Test 1.0 ppm Date Performed 5-86

Max./Min Test Press. Allowed 375 PSIG Act. Test Press. 400 PSIG

Temperature of: Thermometer Number N/A

Medium 60 ~ °F Material 60 ~ °F Atmospheric 60 ~ °F

Test Gage:

CDS # 505-A Cal. Date 12-87 Re-Cal Due Date 6-88

Req'd Exam. Press. 375 PSIG Actual Exam Press. 400 PSIG

Start Time 3:30 Complete Time 4:00

Test Results (Acceptable/Unacceptable)

TEST OK.! TEST PER PRODUCT SERVICE INDEX

Remarks: PEN. NOS. 965, 964, 963, 962 WERE JUMPED TOGETHER FOR TEST

John R. [signature] 2-16-88 W. A. Bell, Jr. 2-17-88
QC Acceptance Date Reviewed By Date

ASR# 15-64 (9/87)
FILE ID 26033

TEST REPORT NO. 83-I

MK-FERGUSON

IR NO. 4L021688-02
FS. (34.11D), 34.03A

HYDRO/PNEUMATIC TEST RECORD

Distribution:
Project Records Center-C...

Test Boundaries (1) W750136 (2) W750136

Project No. 1730 Test No. N/A Location -5- Date of Test 2-16-88

System Name PROCESS SDP

Spool/Mark # of Piping/Vessel N/A Dwg. # & Rev. W750136-R0

Applicable Specification Number 4482-P224A

Material to be Tested S/S Test Medium Used WATER

Max. Chloride Allowed 250ppm Results of Most Recent Chloride Test 1.0 ppm Date Performed 5-86

Max./Min Test Press. Allowed 375 PSIG Act. Test Press. 400 PSIG

Temperature of: Thermometer Number N/A

Medium 60 ~ °F Material 60 ~ °F Atmospheric 60 ~ °F

Test Gage:

CDS # 505-A Cal. Date 12-87 Re-Cal Due Date 6-88

Req'd Exam. Press. 375 PSIG Actual Exam Press. 400 PSIG

Start Time 3:30 Complete Time 4:00

Test Results (Acceptable/Unacceptable)

TEST OK.! TEST PER PRODUCT SERVICE INDEX

Remarks: PEN. NOS. 965, 964, 963, 962 WERE JUMPED TOGETHER FOR TEST

John R. [illegible] 2-16-88
QC Acceptance Date

W. A. Bell Jr. 2-17-88
Reviewed By Date

ASR# 15-84 (9/87)
FILE ID 26033

ORIGINAL

DEFENSE WASTE PROCESSING FACILITY

PART IV-B PROCEDURE

RUN-IN OF THE INTERAREA TRANSFER LINES FROM THE AUXILIARY PUMP PIT TO THE LOW POINT PUMP PIT

APPROVALS:

PROCEDURE PREPARED BY:	C. O. Williams C. O. WILLIAMS	2/18/88 DATE
TASK TEAM APPROVAL:	K. O. Darden TASK TEAM LEADER	2/18/88 DATE
	J. R. [illegible] TASK TEAM SUPERVISOR	2-20-88 DATE
PROCEDURE COMPLETED BY:	Michael W. Lewis TASK TEAM LEADER	3/22/89 DATE
COMPLETION APPROVAL:	Will F. Davis TASK TEAM SUPERVISOR	3/22/89 DATE
FILED BY:	Denise Kerrow STARTUP LIAISON FILE CLERK	3/28/89 DATE

DISTRIBUTION:

Task Team Leader, (2 copies) - K. O. Darden, 704-11S
Du Pont Construction Field Engineer: J. K. Blakenship, SAAB
AES Design Engineer - P. A. Morse, Louviers, 4123
Task Team File Clerk Marcelle Michael, 704-11S
Document Distribution Center D. M. McCorkle, TC-S1, Box 7
Central Files, 703-A

SCOPE: This procedure covers the run-in of the Interarea Transfer Lines from the Auxiliary Pump Pit to the Low Point Pump Pit as detailed in the Part II turnover package and Part IV-A procedure 34.11D.

SAFETY: Comply with Plant and/or Construction Safety Rules, whichever is more stringent. The following Safety Manual Items (SMI) apply to this turnover package:

Safety Manual Item 103	Safety Rules for Operations personnel in the vicinity of Construction Division Work.
Safety Manual Item 24	Barricades.
Safety Manual Item 32	Work Clearance Permits.
Safety Manual Item 22	Locking, Tagging and Trying.

REFERENCES: The following references were used to prepare this Part IV-B procedure.

Project Specifications:

C-19, Rev.6	Trenching and Backfilling.
P-01, Rev.15	Project Product and Service Index
P-11, Rev.6	Furnishing and Installing Process and Service Piping
Du Pont Site Spec 7797	Corrosion Protection for Underground Piping
TOPS 34.11D	Part 11 Turnover Package
TOPS 34.03a	LPPP Sludge Tank and Sump
TOPS 34.03b	LPPP Precipitate Tk & Sump
TOPS 34.03c	LPPP Recycle Tank and Sump

2

			DATE	SIGNATURE
Drawings:	W750040, Rev. #11	Low Pt. Precipitate Tank (Sht. 1 of 2) Piping and Instrument Diagram		
	W750135, Rev. #7	Low Pt. Leak Detect Boxes (Sht. 1 of 2) Piping		
	W750136, Rev. #10	Low Pt. Sludge Tank (Sht. 1 of 2) Piping and Instrument Diagram		
	W750137, Rev. #9	Low Pt. Recycle Waste Tank (Sht. 1 of 2) Piping and Instrument Diagram		
	W750150, Rev. #11	APP Sludge Tank P & ID (Sht. 1 of 2)		
	W750209, Rev. #8	APP Leak Det. Boxes P & ID (Sht. 1 of 2)		
	W750287, Rev. #12	APP. Precipitate Tank P & ID (Sht. 1 of 2)		
	W750290, Rev. #10	APP Recycle Tank P & ID (Sht. 1 of 2)		
	W750468, Rev. #4	APP Leak Det. Boxes P & ID (Sht.		

Prior to final testing any of the Transfer lines described in this procedure verify that the following TOPS have been completed and all instruments are operational.

TOPS 34.03a	3-9-89	RD Templa
TOPS 34.03b	3-9-89	RD Templa
TOPS 34.03c	3-9-89	RD Templa

DATE SIGNATURE

GENERAL INFORMATION:

This Procedure along with a written Job Plan will be used to Run-in the Interarea Transfer Line from the Auxiliary Pump Pit to the Low Point Pump Pit.

I. RUN-IN PROCEDURE

1. Run-in of SDP 10 (3" SST Core Pipe)

A. Verify that Leak Detection Box No. 020 at the Low Point Pump Pit is dry. ** see addendum.

3-9-89 RD Templa

B. Introduce liquid into Nozzle #5 on the East wall of the Auxiliary Pump Pit Sludge Cell (#1).

2-24-88 [illegible]

C. Verify that the liquid exits Nozzle #7 on the East wall of the Low Point Pump Pit Sludge Cell (#1).

2-24-88 RD Templa

D. Verify that leak Detection Box No. 020 at the Low Point Pump Pit is dry.

3-9-89 RD Templa

2. Run-in of SDP 11 (3" SST Core Pipe)

A. Verify that Leak Detection Box No. 20 at the Low Point Pump Pit is dry.

3-9-89 RD Templa

B. Introduce liquid into Nozzle #4 on the East wall of the Auxiliary Pump Pit, Sludge Cell (#1).

2-24-88 [illegible]

C. Verify that the liquid exits Nozzle #6 on the East wall of the Low Point Pump Pit, Sludge Cell (#1).

2-24-88 RD Templa

D. Verify that Leak Detection Box NO. 20 at the Low Point Pump Pit is dry.

	DATE	SIGNATURE

3. Run-in of RCZ 20 (3" SST Core Pipe)

   A. Verify Leak Detection Box No. 30 at the Low Point Pump Pit is dry.

   3-9-89 RD Templer

   B. Introduce liquid into Nozzle #4 on the East wall of the Auxiliary Pump Pit, Recycle Cell (#2)

   2-24-88 [illegible]

   C. Verify that the liquid exits Nozzle #5 on the East wall of the Low Point Pump Pit, Recycle Cell (#2)

   2-24-88 RD Templer

   D. Verify that Leak Detection Box No. 30 at the Low Point Pump Pit is dry.

   3-9-89 RD Templer

4. Run-in of PCP 4 (3" SST Core Pipe)

   A. Verify that Leak Detection Box No. 30 at the Low Point Pump Pit is dry.

   2-24-88 RD Templer

   B. Introduce liquid into Nozzle #4 on the East wall of the Auxiliary Pump Pit, Precipitate Cell (#3)

   2-24-88 [illegible]

   C. Verify that the liquid exits Nozzle #5 on the East wall of the Low Point Pump Pit, Precipitate Cell (#3)

   2-24-88 RD Templer

   D. Verify that Leak Detection Box No. 30 at the Low Point Pump Pit is dry.

   3-9-89 RD Templer

3-9-89 RD Templer

Leak Detection Box # 020 At the Low Point Pump Pit needed to be drained. Liquid was drained and ALL water was depleted. (Water appeared to be that which was used for hydrotest of line). [illegible] 3/2/89

3-9-89 RO Temples

PART IV-B DOCUMENTATION REVIEW CHECKLIST

SECTION I

TOP (Segment)# 34.110 Task Team Intra Area Date 10/27/89

Review of : X Part IV-B Documentation

___ Part IV-B included in Part IV-A Documentation

SECTION II

	Yes	If not, describe finding below	Action taken or planned	Action Approved	Action Completed
1. Individual operations (steps) signed on the same date or in sequential order, unless procedure specifies this as not being required.	no	Steps 1, 1A, 1d, 2A, 3A, 3d, & 4d are out of order.	No detrimental effects could occur by performing steps in sequence detailed used	[illegible] 10/27/89 W.J. [illegible] 11-2-89	
2. Steps verifying completion of another document are signed on or after completion of that document?	yes		NA		NA
3. Attachments listed in the procedure are attached?	yes		NA		NA
4. All attached data sheets, reports, etc.:					
a. are referenced in the procedure?	yes		NA		NA
b. have the correct equip. ID#?	yes				
c. have all blanks completed or N/A'd?	yes				
d. have acceptance criteria specified?	N/A				
e. have acceptable test results?	N/A				
5. M&TE utilized is identified?	N/A		NA		NA
6. Corrections lined thru, signed and dated?	yes		NA		NA
7. Black ink utilized, data is legible and microfilmable?	yes		NA		NA

8. Note other findings or concerns:

Reviewed by Rodney Bodford Date 10/27/89 Approved by [illegible] Date 11/6/89 T/T Leader

Reviewed by NA Date ___ Approved by [illegible] Date 11/8/89 T/T Supervisor

Rev. 7/21

NOTE: Attach to Part IV-B reviewed as part of Record.

Top(Segment)#_____

Sheet__of__

PART IV-B DOCUMENTATION REVIEW CHECKLIST

Continuation sheet

"INFORMATION ONLY" ORIGINAL

File Code No. 2.1.8.5

DEFENSE WASTE PROCESSING FACILITY

PART IV-A PROCEDURE

CHECKOUT OF THE INTERAREA TRANFER LINE BETWEEN THE AUXILIARY PUMP PIT & THE LOW POINT PUMP PIT

APPROVALS:

PROCEDURE PREPARED BY:	T. R. SULLIVAN	9/17/87 DATE
TASK TEAM APPROVAL:	K. O. Darden TASK TEAM LEADER	10/27/87 DATE
	TASK TEAM SUPERVISOR	10/28/87 DATE
PROCEDURE COMPLETED BY:	J. A. Brooks TASK TEAM LEADER	1/17/89 DATE
COMPLETION APPROVAL:	Will F. Davis TASK TEAM SUPERVISOR	1-18-89 DATE
FILED BY:	Denise Keenan STARTUP LIAISON FILE CLERK	1/19/89 DATE

DISTRIBUTION:

Task Team Leader, (2 copies) - K. O. Darden, 704-11S
AES Design Engineer - P. A. Morse Louviers, L4123
J. W. McKibben, TC-S1
Startup Liaison Master File, 704-8S

SCOPE: This procedure details the commissioning plans and requirements for the Interarea Transfer Line from the Auxilairy Pump Pit to the Low Point Pump Pit as detailed in Part II Turnover Package 34.11C.

GENERAL: The Interarea Transfer Line from the Auxilairy Pump Pit to the Low Point Pump Pit will be commissioned by the Task Team.

This Part IV-A procedure will be completed by the Task Team in accordance with the Construction Quality Verification Plan. All verification steps required by this procedure are over and above those required by the Construction Quality Verification Checklists and are required by the contract, and/or the SRC QA Plan, and/or specific Project related documentation.

The verifications in this procedure are performed by reviewing the appropriate quality verification documentation and recording its document number. If any reviewed document does not have an identifying number, it must be copied and the copy attached to this procedure.

SAFETY: Comply with Plant and/or Construction Safety Rules, whichever is more stringent. The following Safety Manual Items (SMI) apply to this turnover package:

Safety Manual Item 103 - Safety Rules for Operations personnel in the vicinity of Construction Division Work.

Safety Manual Item 24 - Barricades.

Q-ITEMS: There are no "Q" construction or "Q" checking requirements for this turnover package.

WITNESS POINTS: This Part IV-A procedure does not contain any Witness Points which require the QV Checker to schedule a visual inspection of the area or facility in question in conjunction with the continuation of construction. Any Witness Points that might arise should be scheduled so that they do not interrupt construction activities. Missing a Witness Point at its prescribed time will eliminate the opportunity to make the check.

2

REFERENCES: The following references were used to prepare this Part IV-A procedure.

Project Specifications:

C-18, Rev.5	Installation of Utility Piping
C-19, Rev.6	Trenching & Backfilling
E-42, Rev.1	Interarea Cathodic Protection System
P-01, Rev.12	Project Product and Service Index
P-3, Rev.4	Installation of Embedded Piping
S-20, Rev.3	Furn., Fabr. & Delivery of Sructural Steel
Dupont Site Spec. 7196	Thermal Insulation Specification
Du Pont Site Spec. 7797	Corrosion Protection for Underground Piping

Project Documents: Letter, M. N. Borders to F. G. Gatlin, et al, 12/10/86, Rev. 1 (PC-0000277)

Drawings:

W750150, Rev.# 11	Aux. Sludge Tank P & ID (sheet 1 of 2)
W750209, Rev.# 8	Aux. Leak Detection Boxes P & ID (sheet 1 of 2)
W750287, Rev.# 12	Aux. Precipitate Tank P & ID (sheet 1 of 2)
W750290, Rev.# 10	Aux. Recycle Tank P & ID (sheet 1 of 2)
W750468, Rev.# 4	Aux. Leak Detection Boxes P & ID (sheet 2 of 2)
W750040, Rev.#11	Low Pt. Precipitate Tank (Sht 1 of 2) Piping and Instrument Diagram
W750135, Rev.#7	Low Pt. Leak Detect Boxes (Sht 1 of 2) Piping
W750136, Rev.#10	Low Pt. Sludge Tank (Sht 1 of 2) Piping and Instrument Diagram
W750137, Rev.#9	Low Pt. Recycle Waste Tank (Sht. 1 of 2) Piping and Instrument Diagram

		DATE	SIGNATURE
Checklists:	511.S.205	Auxiliary Pump Pit Wall APW-001-277	
	511.S.207	Auxiliary Pump Pit Wall APW-001-286	
	511.S.219	Leak Detection Boxes & Underground Piping	
	511.S.107	LPPP Foundation Wall LPW-001-268	
	511.S.108	LPPP Foundation Wall LPW-002-268	
	511.S.109	LPPP Foundation Wall LPW-003-268	
	511.S.123	LPPP - Outside Underground Piping DA 511	
	TOP 34.11D	Interarea Transfer Lines Between the Auxiliary Pump Pit & the Low Point Pump Pit	

SECTION 1.0 - VERIFICATION REQUIREMENTS

The following steps are verifications that all activities by the Interarea Task Team and verifications of work performed by other Task/Resource Teams have been completed prior to the Preliminary Acceptance Inspection (PAI).

1.1) Review the following Check list to verify it has been completed and signed off.

Checklist No.	Title		
TOP.3411C	Interarea Transfer Lines Between the Auxiliary Pump Pit & the Low Point Pump Pit	5/31/88	[signature]

3

	DATE	SIGNATURE

Information: Pipe Hydrostatic Testing - Construction is required to hydrostatically test all lines in accordance with the requirements listed in Project Specification P-01. The piping in this facility segment is designated:

1.2) Review the QV checklist documentation to verify the hydrostatic testing of the following 16 pipes:

1. Line No.: SDP 10 (core)

Location: APP Sludge Cell Wall Nozzle #5
to LPPP Sludge Cell Wall Nozzle #7
Test Pressure: 375 lbs.
OV Doc. No.: #83-G — 4/7/88 — [signature]

2. Line No.: SDP 11 (core)

Location: APP Sludge Cell Wall Nozzle #4
to LPPP Sludge Cell Wall Nozzle #6
Test Pressure: 375 lbs.
OV Doc. No.: #83-G — 4/7/88 — [signature]

3. Line No.: RCZ 20 (core)

Location: APP Recycle Cell Wall Nozzle #4
to LPPP Recycle Cell Wall Nozzle #5
Test Pressure: 375 lbs.
OV Doc. No.: #78-F — 4/7/88 — [signature]

4. Line No.: PCP 4 (core)

Location: APP Precipitate Cell Wall Nozzle #4
to LPPP Precipitate Cell Wall Nozzle #5
Test Pressure: 375 lbs.
OV Doc. No.: #78-F — 4/7/88 — [signature]

5. Line No.: SDP10 (Jacket)

Location: APP Sludge Cell Pen #945
to LPPP Sludge Cell Pen #964
Test Pressure: 125 lbs.
OV Doc. No.: #83-H — 4/7/88 — [signature]

6. Line No.: SDP11 (Jacket)

Location: APP Sludge Cell Pen #944
to LPPP Sludge Cell Pen #965
Test Pressure: 125 lbs.
OV Doc. No.: #83-H — 4/7/88 — [signature]

	DATE	SIGNATURE
7. Line No.: RCZ20 (Jacket) Location: APP Recycle Cell Pen #983 to LPPP Recycle Cell Pen #1246 Test Pressure: 125 lbs. QV Doc. No.: # 78-H	4/7/88	[illegible]
8. Line No.: PCP4 (Jacket) Location: APP Precipitate Cell Pen #1211 to LPPP Precipitate Cell Pen #1184 Test Pressure: 125 lbs. QV Doc. No.: # 78-H	4/7/88	[illegible]
9. Line No.: LDX 1 P242 - 1 Test Pressure: 375 lbs. QV Doc. No.: # 100-I	4/7/88	[illegible]
10. Line No.: LDX 2 P242 - 1 Test Pressure: 375 lbs. QV Doc. No.: # 100-I	4/7/88	[illegible]
11. Line No.: LDX 45 P242 - 1 Test Pressure: 375 lbs. QV Doc. No.: # 100-G	4/7/88	[illegible]
12. Line No.: LDX 49 P242 - 1 Test Pressure: 375 lbs. QV Doc. No.: # 100-D	4/7/88	[illegible]
13. Line No.: LDX 69 P242 - 1 Test Pressure: 375 lbs. QV Doc. No.: # 100-D	4/7/88	[illegible]
14. Line No.: LDX 72 P242 - 1 Test Pressure: 375 lbs. QV Doc. No.: # 78-E	4/7/88	[illegible]
15. Line No.: LDX 132 P242 - 1 Test Pressure: 375 lbs. QV Doc. No.: # 78-E	4/7/88	[illegible]
16. Line No.: LDX 165 P242 - 1 Test Pressure: 375 lbs. QV Doc. No.: # 100-G	4/7/88	[illegible]

4
3rd Folder

DATE SIGNATURE

SECTION 2.0 - COMMISSIONING ACTIVITY OUTLINE

The following section is divided into two parts. The first part describes any verifications that are required by the Task Team that were not covered by the Construction Quality Verification Checklists. The second part is an outline of the actual commissioning activities that will be performed by the Task Team.

Information: The following verification steps are required prior to commissioning:

2.1) Verify that Distribution Station & MCC B11 (TOP 2.04A) has been accepted for turnover by the Electrical Task Team.

1/14/89 [illegible]

Verify that the APP Sludge Tank (TOP 34.08A) has been accepted for turnover by the Task Team.

1-16-89 RD Templer

Verify that the APP Precipitate Tank (TOP 34.08B) has been accepted for turnover by the Task Team.

1-16-89 RD Templer

Verify that the APP Recycle Tank (TOP 34.08C) has been accepted for turnover by the Task Team.

1-16-89 RD Templer

Verify that Motor Control Center MCC B202 (TOP 2.04K) has been accepted for turnover by the Electrical Task Team.

1/14/88 [illegible]

	DATE	SIGNATURE
Verify that the LPPP Sludge Tank (TOP 34.03A) has been accepted for turnover by the Task Team.	1-16-89	RD Templeton
Verify that the LPPP Precipitate Tank (TOP 34.03B) has been accepted for turnover by the Task Team.	1-16-89	RD Templeton
Verify that the LPPP Recycle Tank (TOP 34.03C) has been accepted for turnover by the Task Team.	1-16-89	RD Templeton
Verify that the Interarea Transfer Line between the APP to LPPP (TOP 34.11D) has been accepted for turnover by the Task Team.	1-16-89	RD Templeton

Information: The following is an outline that will be performed by the appropriate Task Teams. Special procedures (Part 4B) will be written to accomplish these steps.

2.2) Perform run-in of the SDP 10 (core) pipe line from the APP Sludge Cell Nozzle.#5 to LPPP Sludge Cell Nozzle #7.

Perform run-in of the SDP 11 (core) pipe line from the APP Sludge Cell Nozzle.#4 to LPPP Sludge Cell Nozzle #6.

Perform run-in of the RCZ 20 (core) pipe line from the APP Recycle Cell Nozzle.#4 to LPPP Recycle Cell Nozzle #5.

Perform run-in of the PCP 4 (core) pipe line from the APP Precipitate Cell Nozzle.#4 to LPPP Precipitate Cell Nozzle #5.