UNCLASSIFIED
DOES NOT CONTAIN
UNCLASSIFIED CONTROLLED
NUCLEAR INFORMATION
ADC &
Reviewing
Official Paul D. d'Entremont
(Name and Title)
Date 2/13/05

DECONTAMINATED SALT SOLUTION VOLUME TO BE TRANSFERRED TO THE SALTSTONE DISPOSAL FACILITY FROM SALT TREATMENT AND DISPOSITION ACTIVITIES

Issued by:
Maria A. Rios-Armstrong — 2-13-05
M. A. Rios-Armstrong, Salt Disposition, PI&T — Date

Reviewed by:
M. D. Drumm — 2-13-05
M. D. Drumm, Salt Disposition, PI&T — Date

Concurrence:
L. B. Romanowski — 2/13/05
L. B. Romanowski, Salt Disposition, PI&T — Date

February 13, 2005

DISCUSSION

Decontaminated salt solution generated from salt waste treatment and disposition activities will be mixed with dry chemicals to form a homogeneous grout mixture to be disposed in the Saltstone Disposal Facility (SDF). A Waste Determination (WD) document has been drafted to demonstrate and document that the solidified low-activity decontaminated salt solution is not high-level waste (HLW) and may be disposed as low-level waste (LLW) at SDF in accordance with Section 3116 of the Ronald W. Reagan National Defense Authorization Act (NDAA) for Fiscal Year 2005 [1]. The WD addresses the entire salt waste treatment and disposal strategy through the end of salt processing at Savannah River Site (SRS).

Based on tank waste characterization data, separation of the salt waste to segregate the low-activity fraction will occur at SRS using a two-phase, three-step process. The initial or interim phase involves two steps: 1) interim processing beginning in 2005 of some of the lowest activity salt waste through the deliquification, dissolution, and adjustment (DDA) process; and 2) interim processing beginning in approximately 2007 of some additional higher activity salt waste through the Actinide Removal Process (ARP) and the Modular Caustic Side Solvent Extraction (CSSX) Unit (MCU). The second, and longer term, phase involves the separation and processing beginning in approximately 2009 of

the remaining waste through the upcoming Salt Waste Processing Facility (SWPF).

This paper documents the basis for the salt solution and decontaminated salt solution volumes used in the WD.

VOLUME CALCULATIONS

This section documents the process used to determine the volume of salt solution processed via DDA, ARP/MCU, and SWPF and the volume of decontaminated salt solution sent to the Saltstone Processing Facility. These volumes are referenced in the WD.

Based on the Waste Characterization System (WCS), the current total volume of saltcake and free supernate in the Tank Farms is approximately 16.4 and 17.4 million gallons (Mgal) [2], respectively, as of December 1st, 2004. Attachment 1 shows the saltcake volume, free supernate volume, and sodium molarity for every tank in the Tank Farm except Tank 48 and Tank 50. Attachment 1 also shows calculated weighted average molarities of 7.31 molar sodium (M Na) and 9.60 M Na, including and excluding the recycle tanks, Tanks 21 through 24, respectively. Calculations documented herein assume that all of the available recycle in Tanks 21 through 24 is used by the DDA process. Future receipts into the Tank Farm were also calculated and documented herein.

INPUTS AND ASSUMPTIONS USED IN THE CALCULATION

Inputs and assumptions used in this calculation are as follows:

1. All of the available recycle in Tanks 21 through 24 is used by the DDA process.
2. Waste tank volumes are as of December 1st 2004 [2].
3. Future salt waste volume is based on projected waste tank receipts after December 1st, 2004 through the remainder of salt waste processing. Volume does not include dissolution liquid, adjustment liquid, or water added as part of normal operations (e.g., flushes, transfer jet dilution).
4. Ratio of Salt Solution to Saltcake Dissolved (by volume) = 2.79 [3]
5. DDA Salt Solution Sodium Molarity = 8.0 M [3]
6. SWPF Peak Production Rate (feed) = 180,082 gallons per week [3]
7. SWPF Peak Decontaminated Salt Solution Produced = 230,000 gallons per week [3]
8. Gallons of Saltstone Produced per Gallon of Salt Solution Processed = 1.564 [3]
9. 100,000 gallons are transferred from the Effluent Treatment Facility to Tank 50 on a yearly basis [4].
10. 12,000 gallons are transferred from the 299-H Facility to Tank 50 on a yearly basis.

DDA PROCESS

To calculate the volume of saltcake treated by the DDA process, the volume of salt solution processed by DDA, as documented in the Interim Salt Processing Strategy [4],

was normalized to 8 M Na and then divided by 2.79. This is based on the assumption that 1 gallon of dissolved saltcake generates 2.79 gallons of salt solution at 8.0 M Na [3]. Based on this calculation, approximately 1.2 Mgals of saltcake are treated by the DDA process. This volume, along with the current supernate inventory in Tanks 21 through 24 (DWPF recycle), 48, and 50, results in approximately 5.9 Mgal of current tank inventory of saltcake and supernate processed by DDA. In order to process the salt waste per the Interim Salt Processing Strategy [4], approximately 1 Mgal of additional DWPF recycle is required to aggregate the salt waste for transfer to SDF; therefore, a total of approximately 6.9 Mgals of saltcake and supernate are processed by DDA. Processing this 6.9 Mgal results in approximately 8.6 Mgal [4] of decontaminated salt solution to be sent to SDF for disposal into grout. The volume of grout produced by processing the decontaminated salt solution from the DDA process is approximately 13.4 Mgal. Table 1 summarizes the DDA volume calculation.

TABLE 1: DDA VOLUME CALCULATION SUMMARY

Batch	Volume @ 8 M Na [gals]	Supernate Processed	Volume [gals] [2]	Recycle [gals] [2]
Batch 1	416,725	Tank 48	239,382	**(Tanks 21-24)**
Batch 4	464,350	Tank 50	318,708	4,169,447
Batch 5	456,950	**Total Supernate**	**558,090**	
Batch 7	1,017,875			
Batch 9	922,250			
Salt Solution	3,278,150			
Total Saltcake	**1,174,964**			

Saltcake/Supernate to DDA:	**5,902,501**	**gallons**
Salt Solution from DDA to Saltstone [4]:	**8,555,000**	**gallons**
Grout Produced from DDA Stream:	**13,380,020**	**gallons**

An additional 1 Mgal of recycle are required to aggregate the salt waste before the decontaminated salt solution can be transferred to SDF. This material will be future recycle from DWPF.

The remaining saltcake and supernate volume is treated by ARP/MCU and SWPF after the sodium molarity is adjusted to 6.44 M Na.

ARP/MCU PROCESS

To calculate the volume of saltcake treated by the ARP/MCU process, the volume of dissolved salt solution resulting from dissolution processed by ARP/MCU, as documented in the Interim Salt Processing Strategy [4], was normalized to 8 M Na and then divided by 2.79 as was done for DDA. Based on this calculation, approximately 0.3 Mgals of saltcake are treated by ARP/MCU. In addition to the salt solution, an additional 1 Mgal of supernate are processed. This volume, in addition to 0.3 Mgal of DWPF recycle required to aggregate the salt waste for transfer to SDF, is what gets treated by the ARP/MCU process. As mentioned before, ARP/MCU treats salt solutions after the molarity has been adjusted to 6.44 M Na. The volumes documented in the Interim Salt Processing Strategy [4] for salt solution at 6.44 M Na processed by ARP/MCU and decontaminated salt solution to be sent to Saltstone from this process were used. These volumes are approximately 2.1 Mgal and 2.8 Mgal, respectively. The volume of grout

produced by processing the decontaminated salt solution from the ARP/MCU process in SDF is approximately 4.4 Mgal. Table 2 summarizes the ARP/MCU volume calculation.

TABLE 2: ARP/MCU VOLUME CALCULATION SUMMARY

Batch	Volume @ 8.0 M Na [gals]	Supernate Processed	Volume [gals]
Batch 6	872,350	Batch 8	1,000,000
Total Saltcake	**312,670**		

Saltcake/Supernate to ARP/MCU:	**1,312,670**	**gallons**
Salt Solution to ARP/MCU @ 6.44 M Na [4]:	**2,136,000**	**gallons**
Salt Solution from ARP/MCU to Saltstone [4]:	**2,840,000**	**gallons**
Grout Produced from ARP/MCU Stream:	**4,441,760**	**gallons**

An additional 0.3 Mgal of recycle are required to aggregate the salt waste before the decontaminated salt solution can be transferred to SDF. This material will be future recycle from DWPF.

SWPF PROCESS

The volume of saltcake and supernate to be processed by SWPF was calculated by subtracting the volumes processed by DDA and ARP/MCU from the total volume in the Tank Farm. This results in approximately 14.9 Mgal of saltcake and approximately 11.7 Mgal of supernate for a total of approximately 26.6 Mgal of saltcake and supernate to be processed by SWPF. The volume of dissolved salt solution was then calculated by using a 3.5:1 dissolution ratio. This factor was derived from the assumption that 1 gallon of dissolved saltcake generates 2.79 gallons of salt solution at 8.0 M Na and adjusting to 6.44 M Na [3]. The supernate molarity was also adjusted to 6.44 M Na using a calculated weighted average molarity of 9.60. Adjusting the saltcake and supernate molarities yields a total salt solution volume of approximately 69.1 Mgal at 6.44 M Na. Approximately 1.3 gallons of decontaminated salt solution are generated per gallon of salt solution fed to SWPF. This is based on integrated flowsheet runs which show that, on average, 180,082 gallons of salt solution are fed to SWPF on a weekly basis generating approximately 230,000 gallons of decontaminated salt solution [3]. This results in approximately 88.2 Mgal of decontaminated salt solution generated from processing existing waste in SWPF. Additional decontaminated salt solution resulting from treatment of future waste to be received in the Tank Farms is not accounted for in this total and is calculated next. Table 3 summarizes the SWPF volume calculation from processing existing waste.

TABLE 3: SWPF VOLUME CALCULATION [EXISTING WASTE]

Saltcake Processed = Total Saltcake - Saltcake Processed by DDA and ARP/MCU

Total Saltcake	14,912,366	gallons

Supernate Processed = Total Supernate - Supernate Processed by DDA and ARP/MCU

Total Supernate	11,672,463	gallons

Saltcake/Supernate to SWPF:	**26,584,829**	**gallons**
Salt Solution to SWPF @ 6.44 M Na:	**69,083,796**	**gallons**
Salt Solution from SWPF to Saltstone:	**88,233,544**	**gallons**

FUTURE WASTE TANK RECEIPTS

Future waste tank receipts were calculated to account for future waste receipts into the Tank Farm that will be treated by Interim Salt Processing and SWPF. Future salt waste volume is based on projected waste tank receipts after December 1st, 2004 through the remainder of salt waste processing. Dissolution liquid, adjustment liquid, or water added as part of normal operation (e.g., flushes, transfer jet dilution) were not included in the total future volume.

Calculation of future waste receipts included the following:

1. Actual volumes transferred into the Tank Farm from F-Canyon during shutdown operations [5]
2. Projected volumes to be sent into the Tank Farm from H-Canyon through the end of fiscal year 2010[1] [6]
3. DWPF recycle based on algorithms developed by DWPF Engineering [7] and inputs to modeling efforts at DWPF. DWPF recycle volumes assume sludge only operations until ARP/MCU[2] become operational in June 2007. After June 2007 the Steam Atomized Scrubbers (SASs) are assumed to be running. Recycle volumes increase again in April 2009 once SWPF comes on-line.
4. 100,000 gallons per year transferred from the Effluent Treatment Facility to Tank 50 [4]
5. 12,000 gallons per year transferred from the 299-H Facility to Tank 50

These additions result in approximately 41.3 Mgal of future salt waste received in the Tank Farms between December 1, 2004 and the end of fiscal year 2019, the end of salt

[1] Includes shutdown volume of 10,000 gallons per month for 6 months as documented in Reference 4.

[2] For ARP/MCU, 6,400 gallons of $CsNO_3$ are assumed to be transferred to DWPF resulting in 249,600 gallons per year at 75% attainment. This volume, in addition to the volumes calculated in Reference 7 for sludge only operations, SASs operation, and water in the MST/sludge solids stream, are summed together to calculate the recycle volume transferred during ARP/MCU operation.

waste processing. 1.3 Mgals of this total will be used by the DDA and MCU process for aggregation as mentioned previously. 1.9 Mgals of this total, which includes low level waste streams transferred from the Effluent Treatment Facility and from H-Canyon, will be sent directly to Tank 50 and will not require processing by DDA, ARP/MCU, or SWPF. The balance of the total volume, 38.1 Mgal, will be adjusted to 6.44 M Na and processed by SWPF. These receipts are at a sodium molarity less than 6.44 M Na; therefore, adjusting the molarity to 6.44 M Na yields an additional 5.9 Mgal from future waste receipts to be processed by SWPF. The majority of this material is DWPF recycle which will be volume reduced via processing in the Tank Farm evaporator systems.

This total, combined with the existing volume to be processed by SWPF, results in approximately 75 Mgals of salt solution to be processed by this facility, resulting in the generation of approximately 150.4 Mgal of grout. Table 4 summarizes the SWPF volume calculation from processing future waste receipts.

TABLE 4: SWPF VOLUME CALCULATION [FUTURE WASTE RECEIPTS]

PROJECTED FUTURE WASTE TANK RECEIPTS							
DATE	F Canyon (gals)[1]	H Canyon (gals)[2]	LLW (gals)[3]	DWPF Recycle (gals)[4]	299-H (gals)[5]	ETF (gals)[5]	Total In (gals)
FY2005 *	39,251	187,200	261,000	1,189,792	10,000	83,333	1,770,576
FY2006	-	210,900	174,000	1,427,750	12,000	100,000	1,924,650
FY2007	-	336,000	-	1,795,417	12,000	100,000	2,243,417
FY2008	-	296,000	-	2,530,750	12,000	100,000	2,938,750
FY2009	-	336,000	-	2,655,950	12,000	100,000	3,103,950
FY2010	-	336,000	-	2,781,150	12,000	100,000	3,229,150
FY2011	-	60,000	-	2,781,150	12,000	100,000	2,953,150
FY2012	-	-	-	2,781,150	12,000	100,000	2,893,150
FY2013	-	-	-	2,781,150	12,000	100,000	2,893,150
FY2014	-	-	-	2,781,150	12,000	100,000	2,893,150
FY2015	-	-	-	2,781,150	12,000	100,000	2,893,150
FY2016	-	-	-	2,781,150	12,000	100,000	2,893,150
FY2017	-	-	-	2,781,150	12,000	100,000	2,893,150
FY2018	-	-	-	2,781,150	12,000	100,000	2,893,150
FY2019	-	-	-	2,781,150	12,000	100,000	2,893,150
Total	***39,251***	***1,762,100***	***435,000***	***37,411,158***	***178,000***	***1,483,333***	***41,308,843***
Na (M) **	3.00	5.50	-	0.78	1.56	-	38,090,509 [6]
Reduction Factor	0.47	0.85	-	0.12	0.24	-	
Final SWPF Feed ***	18,285	1,504,899	-	4,373,712	43,118	-	
Total (gallons)	**5,940,013**						

* Partial Fiscal Year (December 1, 2004 through September 30, 2005)
** Molarities estimated from actual sample analysis results (elsewhere)
*** DWPF recycle to SWPF does not include 1.3 Mgals to be used in DDA/ARP/MCU

[1] F-Canyon volumes are actual volumes sent between December 1, 2004 and February 8, 2005
[2] H-Canyon and LLW volumes are projected volumes through FY10. Shutdown volumes are assumed at 10,000 gallons per month for 6 months.
[3] LLW transferred to Tank 50
[4] DWPF recycle volumes assume sludge only operations until ARP/MCU become operational in June 2007. After June 2007 the Steam Atomized Scrubbers (SASs) are assumed to be running. Recycle volumes increase again once SWPF comes on-line.
[5] Projected volumes used for modeling
[6] Volume excludes recycle used in DDA/ARP/MCU, ETF, and LLW

SUMMARY

Approximately 86 Mgal (8.6 Mgal by DDA, 2.1 Mgal by ARP/MCU, and 69.1+5.9 Mgal by SWPF) of salt solution will be processed by Interim Salt Processing and SWPF resulting in approximately 170 Mgal of grout disposed in SDF. Figure 1 below summarizes these results.

FIGURE 1: SALT PROCESSING VOLUMES

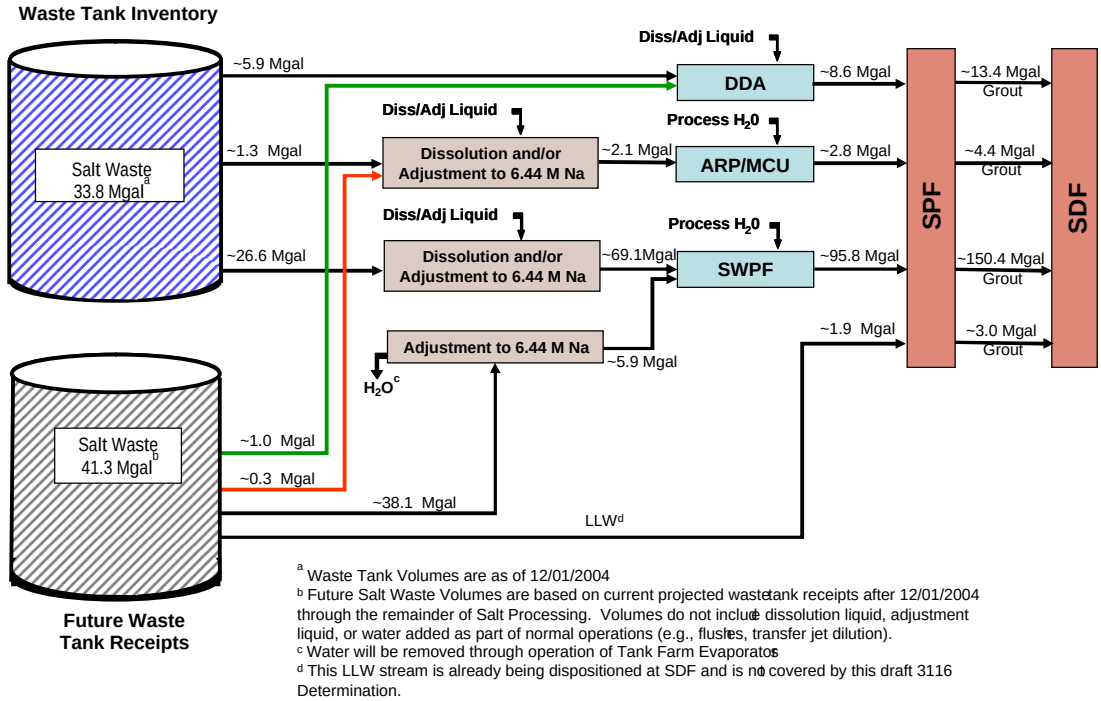

[a] Waste Tank Volumes are as of 12/01/2004
[b] Future Salt Waste Volumes are based on current projected waste tank receipts after 12/01/2004 through the remainder of Salt Processing. Volumes do not include dissolution liquid, adjustment liquid, or water added as part of normal operations (e.g., flushes, transfer jet dilution).
[c] Water will be removed through operation of Tank Farm Evaporators
[d] This LLW stream is already being dispositioned at SDF and is not covered by this draft 3116 Determination.

REFERENCES

1 *"Ronald W. Reagan National Defense Authorization Act for FY 2005,"* Section 3116, 2004.

2 Ledbetter, L. S., CBU-PIT-2004-00024, *"12/01/04 – December Monthly WCS Curie and Volume Inventory Report,"* Revision 0, December 9, 2004.

3 d'Entremont, P. D., CBU-PIT-2005-00013, *"Radionuclide Concentrations in Saltstone,"* Revision 0, February 13, 2005.

4 Mahoney, M. J. and P. D. d'Entremont, CBU-PED-2004-00027, *"Interim Salt Processing Strategy Planning Baseline,"* Revision 0, August 27, 2004.

5 E-mail from Jason Vitali to Maria A. Rios-Armstrong, *"Actual F-Canyon Receipts (Since 10-1-04),"* February 8, 2005.

6 Jilani, I. A., CBU-HCP-2004-00316, *"H-Canyon Liquid Waste Generation Forecast,"* November 30, 2004.

7 Shah, H. B., WSRC-NB-90-177, Engineering Notebook, page 119, September 8, 2004.

ATTACHMENT 1: WCS INVENTORY AS OF 12/1/2004 [2]
(DOES NOT INCLUDE TANK 48 OR TANK 50)

Tank	Area	Saltcake [gal]	Free Supernate [gal]	Supernate Na Concentration [M][1]
1	F	479,941	18,970	14.2
2	F	536,038	271	14.1
3	F	536,038	542	14.2
4	F	33,875	301,352	8.6
5	F	0	8,401	7.5
6	F	0	259,347	3.7
7	F	0	299,591	4.6
8	F	0	7,282	3.5
9	H	533,870	7,046	11.0
10	H	211,380	0	8.2
11	H	0	224,388	3.4
12	H	60,000	0	14.2
13	H	0	582,050	11.0
14	H	129,500	16,450	10.8
15	H	0	0	7.1
16	H	0	0	0.0
17	F	0	0	0.0
18	F	0	4,196	4.8
19	F	13,098	0	4.8
20	F	0	0	0.0
21	H - Recycle	0	1,163,527	0.3
22	H - Recycle	0	534,469	0.7
23	H - Recycle	0	1,255,461	0.5
24	H - Recycle	0	1,215,990	0.0
25	F	1,098,630	164,268	13.1
26	F	0	804,738	11.1
27	F	600,315	486,732	13.3
28	F	1,029,834	193,050	13.2
29	H	1,023,165	227,448	6.9
30	H	250,263	915,057	14.2
31	H	1,146,717	116,532	12.7
32	H	0	719,375	11.3
33	F	293,787	628,641	4.4
34	F	191,295	410,495	7.0
35	H	0	983,853	7.1
36	H	1,035,450	222,183	12.7
37	H	1,112,670	137,943	11.4
38	H	828,009	111,969	9.9
39	H	0	621,621	9.2
40	H	0	274,307	0.9
41	H	1,221,831	0	6.9
42	H	0	1,069,848	8.2
43	H	0	960,055	7.6
44	F	1,003,018	264,794	15.0
45	F	1,104,808	175,640	15.7
46	F	865,180	403,685	16.8
47	F	1,082,905	152,966	8.9
49	H	299	785,590	10.8
51	H	0	128,887	10.0
Total Volume		**16,421,916**	**16,859,010**	
Average Na M				**7.31**
Average Na M (Not including Recycle in Tanks 21-24)				**9.60**

[1] Supernate Sodium Molarity obtained from WCS (December 1st, 2004)